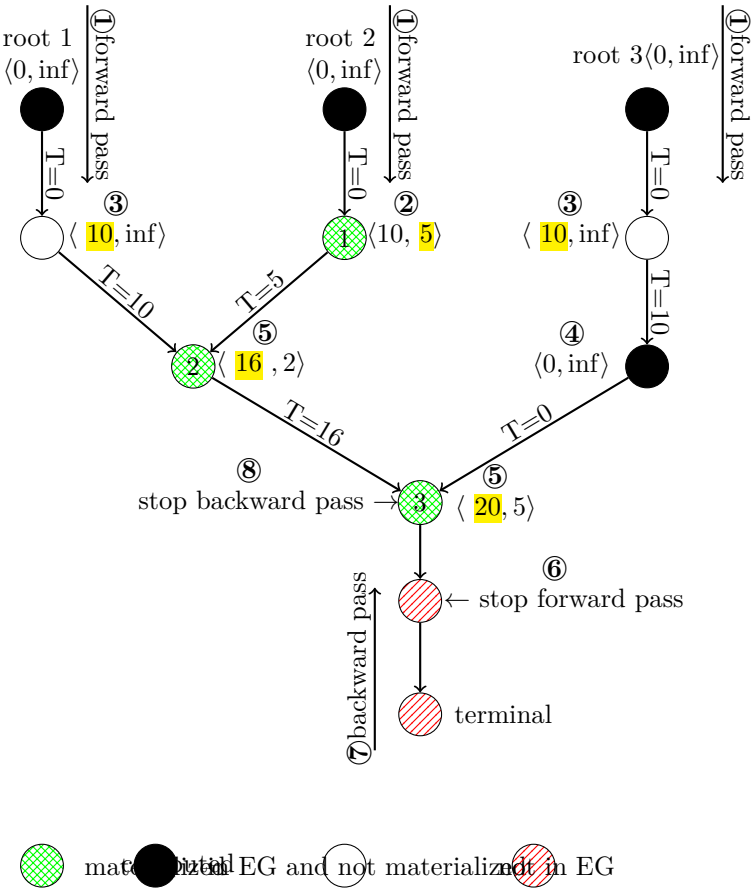
root 1
⟨0, inf⟩
①forward pass
T=0
③
⟨ 10, inf⟩
root 2
⟨0, inf⟩
①forward pass
T=0
②
1
⟨10, 5⟩
root 3⟨0, inf⟩
①forward pass
T=0
③
⟨ 10, inf⟩
T=10
④
⟨0, inf⟩
T=10
T=5
⑤
2
⟨ 16 , 2⟩
T=16
T=0
⑧
stop backward pass →
3
⑤
⟨ 20, 5⟩
⑥
← stop forward pass
⑦backward pass
terminal
materialized in EG
initial
not materialized in EG