Pos. 007 (1 : 2)

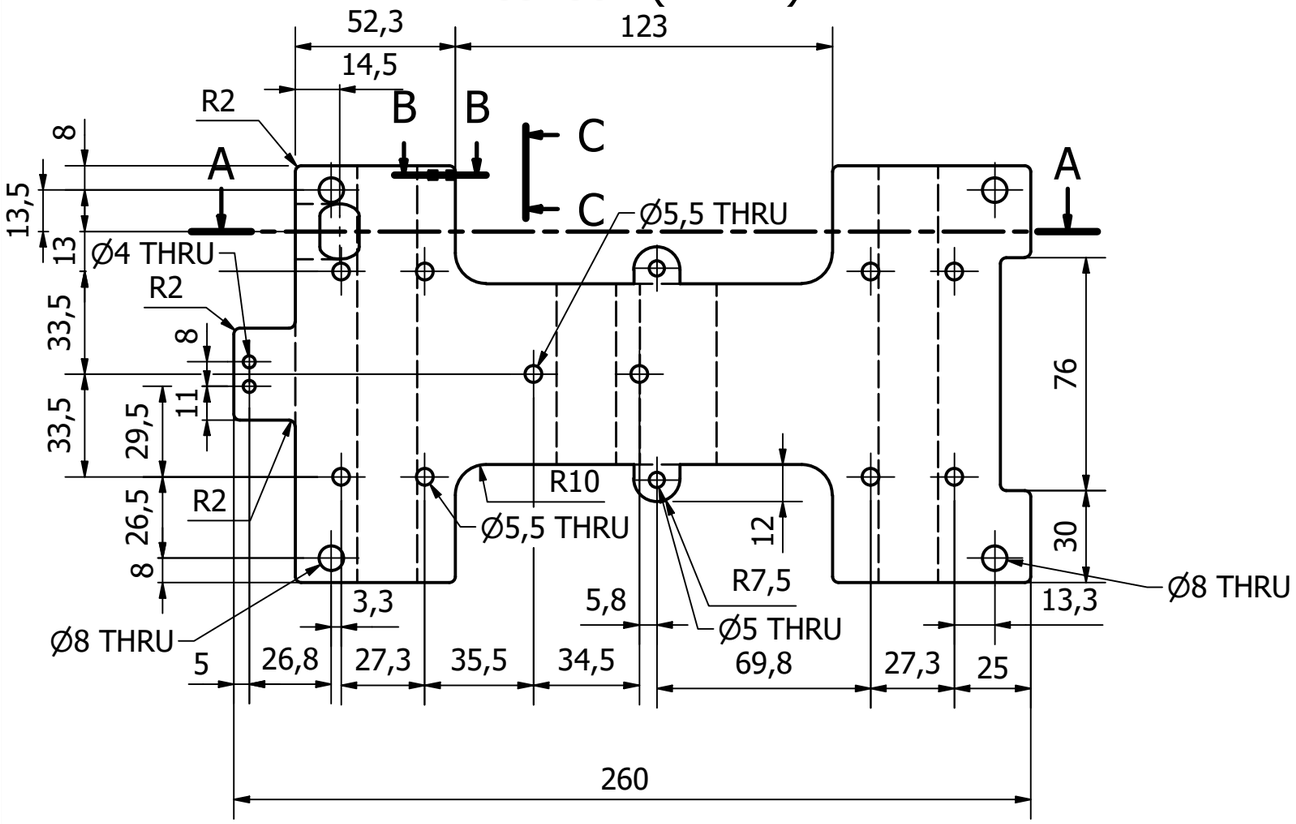

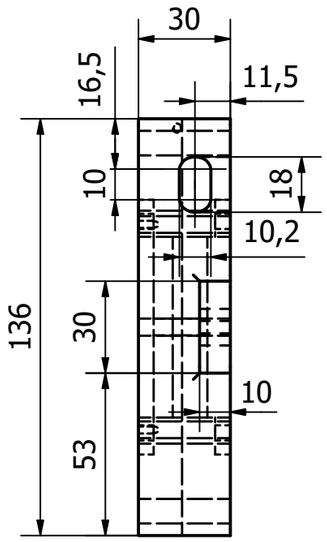

A-A (1 : 2)

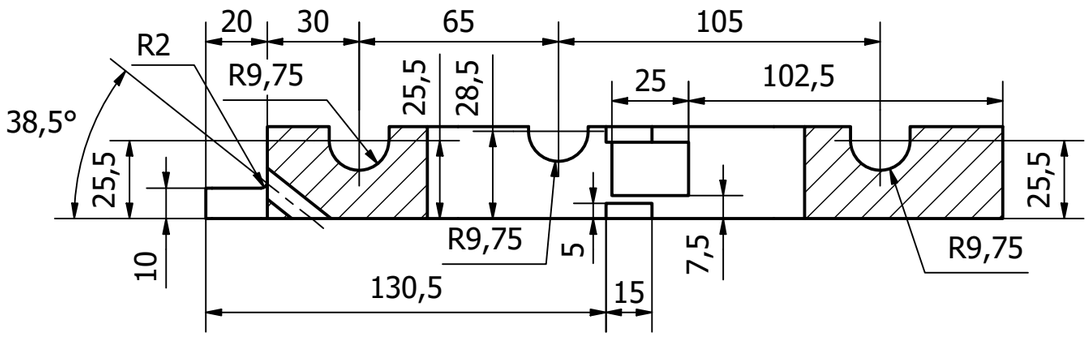

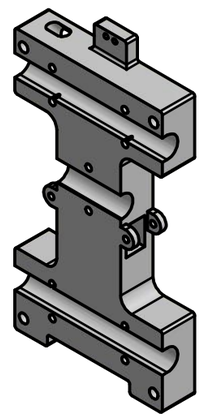

B-B (1 : 2)

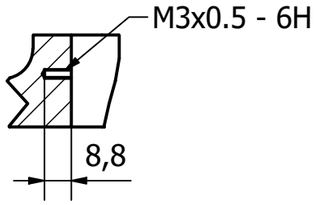

C-C (1 : 2)

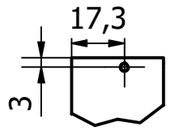

Designed by	Checked by	Approved by	Date		Date	
Iulian Bors					3/13/2021	
Pos. 007				0008-10-015	Edition	Sheet 1 / 1