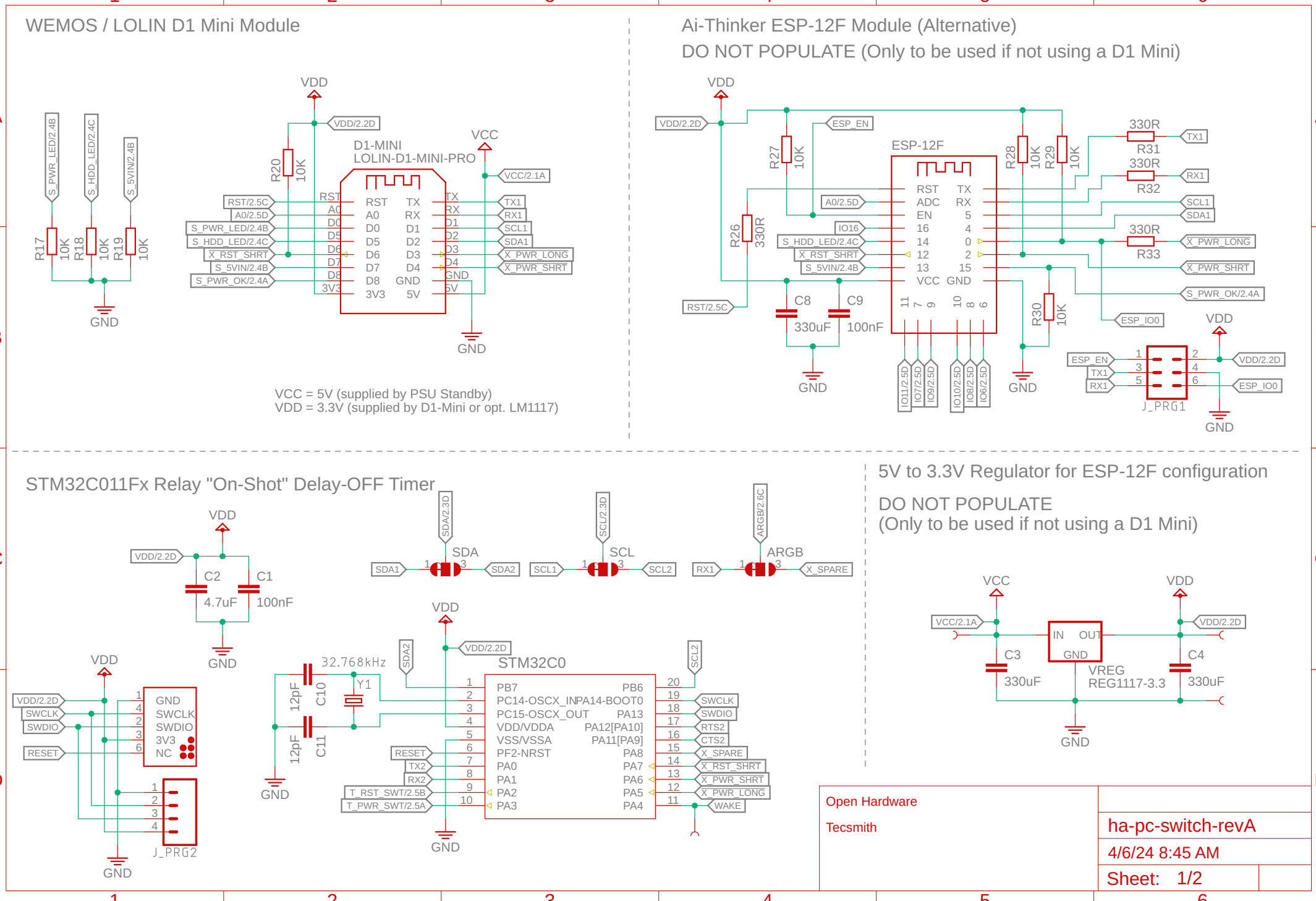
WEMOS / LOLIN D1 Mini Module
D1-MINI
LOLIN-D1-MINI-PRO
VDD
VCC
VDD/2.2D
VCC/2.1A
R20 10K
R17 10K
R18 10K
R19 10K
S_PWR_LED/2.4B
S_HDD_LED/2.4C
S_5VIN/2.4B
RST/2.5C
A0/2.5D
S_PWR_LED/2.4B
S_HDD_LED/2.4C
X_RST_SHRT
S_5VIN/2.4B
S_PWR_OK/2.4A
TX1
RX1
SCL1
SDA1
X_PWR_LONG
X_PWR_SHRT
GND
VCC = 5V (supplied by PSU Standby)
VDD = 3.3V (supplied by D1-Mini or opt. LM1117)
Ai-Thinker ESP-12F Module (Alternative)
DO NOT POPULATE (Only to be used if not using a D1 Mini)
ESP-12F
ESP_EN
R27 10K
R26 330R
R28 10K
R29 10K
R30 10K
R31 330R
R32 330R
R33 330R
C8 330uF
C9 100nF
IO16
ESP_IO0
IO11/2.5D
IO7/2.5D
IO9/2.5D
IO10/2.5D
IO8/2.5D
IO6/2.5D
J_PRG1
STM32C011Fx Relay "On-Shot" Delay-OFF Timer
C2 4.7uF
C1 100nF
SDA/2.3D
SCL/2.3D
ARGB/2.6C
SDA
SCL
ARGB
SDA2
SCL2
X_SPARE
32.768kHz
Y1
C10 12pF
C11 12pF
STM32C0
PB7
PC14-OSCX_IN
PC15-OSCX_OUT
VDD/VDDA
VSS/VSSA
PF2-NRST
PA0
PA1
PA2
PA3
PB6
PA14-BOOT0
PA13
PA12[PA10]
PA11[PA9]
PA8
PA7
PA6
PA5
PA4
SWCLK
SWDIO
RTS2
CTS2
WAKE
T_RST_SWT/2.5B
T_PWR_SWT/2.5A
J_PRG2
5V to 3.3V Regulator for ESP-12F configuration
DO NOT POPULATE
(Only to be used if not using a D1 Mini)
C3 330uF
C4 330uF
VREG
REG1117-3.3
IN
OUT
Open Hardware
Tecsmith
ha-pc-switch-revA
4/6/24 8:45 AM
Sheet: 1/2

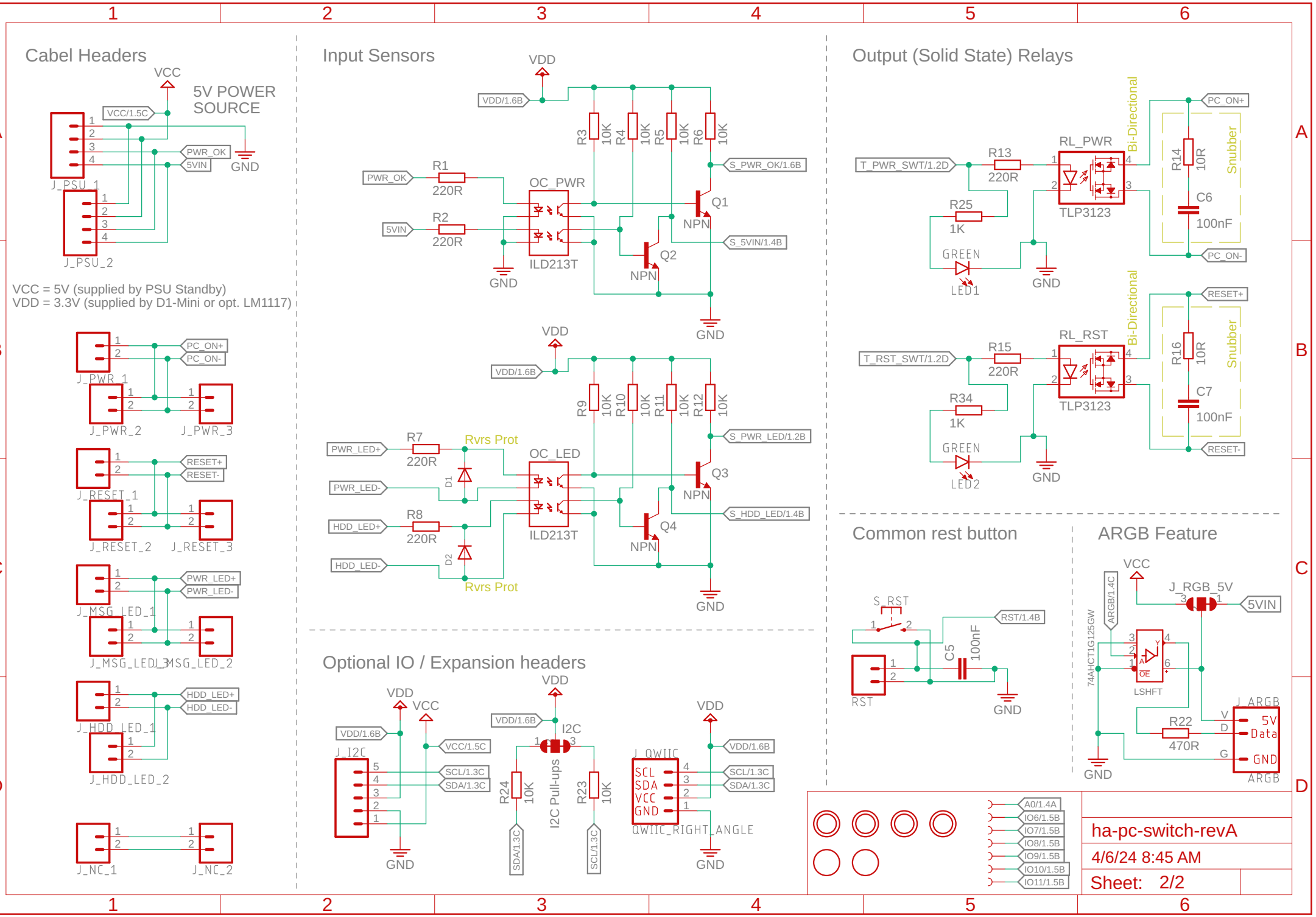
Cabel Headers
VCC
5V POWER SOURCE
VCC/1.5C
PWR_OK
5VIN
GND
J_PSU_1
J_PSU_2
VCC = 5V (supplied by PSU Standby)
VDD = 3.3V (supplied by D1-Mini or opt. LM1117)
PC_ON+
PC_ON-
J_PWR_1
J_PWR_2
J_PWR_3
RESET+
RESET-
J_RESET_1
J_RESET_2
J_RESET_3
PWR_LED+
PWR_LED-
J_MSG_LED_1
J_MSG_LED_2
J_MSG_LED_3
HDD_LED+
HDD_LED-
J_HDD_LED_1
J_HDD_LED_2
J_NC_1
J_NC_2
Input Sensors
VDD
VDD/1.6B
R1
220R
R2
220R
OC_PWR
ILD213T
R3 10K
R4 10K
R5 10K
R6 10K
S_PWR_OK/1.6B
S_5VIN/1.4B
Q1
Q2
NPN
GND
R9 10K
R10 10K
R11 10K
R12 10K
R7
220R
R8
220R
Rvrs Prot
D1
D2
OC_LED
S_PWR_LED/1.2B
S_HDD_LED/1.4B
Q3
Q4
Optional IO / Expansion headers
VCC
VCC/1.5C
J_I2C
SCL/1.3C
SDA/1.3C
I2C
R24 10K
R23 10K
I2C Pull-ups
J_QWIIC
SCL
SDA
VCC
GND
QWIIC_RIGHT_ANGLE
Output (Solid State) Relays
T_PWR_SWT/1.2D
R13
220R
R25
1K
GREEN
LED1
RL_PWR
TLP3123
Bi-Directional
R14 10R
C6
100nF
Snubber
T_RST_SWT/1.2D
R15
220R
R34
1K
LED2
RL_RST
R16 10R
C7
100nF
Common rest button
S_RST
RST/1.4B
C5
100nF
RST
ARGB Feature
ARGB/1.4C
J_RGB_5V
5VIN
74AHCT1G125GW
LSHFT
R22
470R
J_ARGB
5V
Data
GND
ARGB
A0/1.4A
IO6/1.5B
IO7/1.5B
IO8/1.5B
IO9/1.5B
IO10/1.5B
IO11/1.5B
ha-pc-switch-revA
4/6/24 8:45 AM
Sheet: 2/2