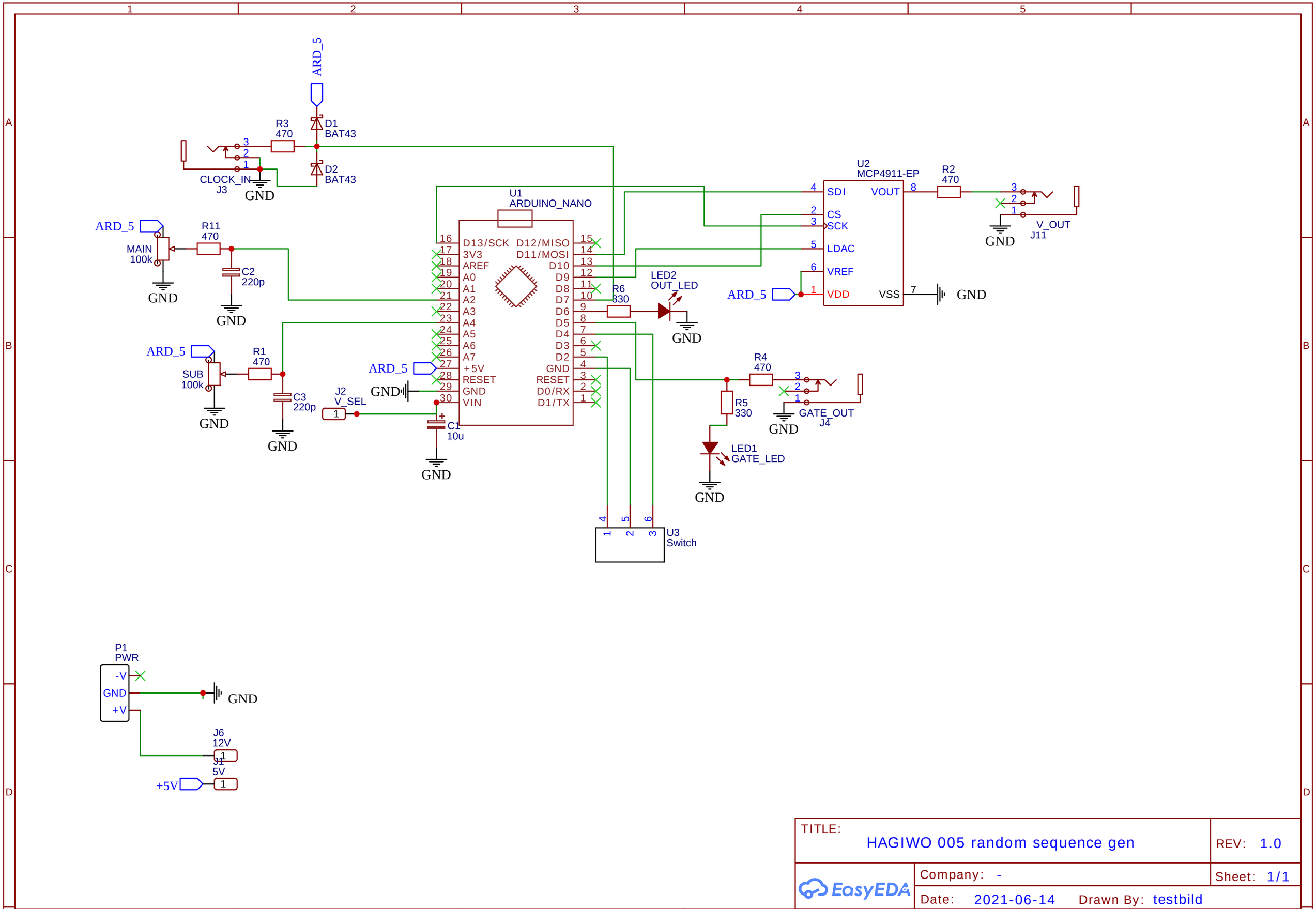

TITLE: HAGIWO 005 random sequence gen		REV: 1.0
EasyEDA	Company: -	Sheet: 1/1
	Date: 2021-06-14 Drawn By: testbild	