Autumn Semester

Roll No. 201701445

Academic Year 2019-20

Computational and Numerical Methods (CS374)

First In-Semester Examination

Dhirubhai Ambani Institute of Information and Communication Technology, Gandhinagar

Time: 2 Hours

Total Marks: 20

All questions are compulsory. Marks for each question are indicated next to it. All terms and symbols carry their standard textbook meaning.

1. Prove that if $f(x) = 0$ is a polynomial equation with real coefficients, then its complex roots occur only in conjugate pairs. [2]

2. Find the root of $f(x) = \cos^2 x - 2x = 0$ by the Newton-Raphson method. Clearly tabulate your numerical steps, and provide the root correct up to 4 places of decimal. [2]

3. Find the root of $f(x) = \ln x + x^2 - 2 = 0$ by the secant method. Present your numerical steps clearly in a table, and provide the root correct up to 5 places of decimal. [2]

4. Plot $y = f(x) = 1/(1 + x^{-2})$ for $x \geq 0$. Provide various details like the quadrants in which $f(x)$ lies, its turning points (if any), the asymptotic behaviour of $f(x)$, etc. In the plot precisely indicate the coordinates where $f(x)$ shows important features. [2.5]

5. Produce the third-degree Taylor polynomial for $f(x) = \exp(x^2)$, using $a = 0$ as the point of approximation. Plot this Taylor polynomial along with $f(x)$ within $-1 \leq x \leq 1$, showing each function distinctly with a clear label. [2.5]

6. By the bisection method, find the root of $f(x) = 2x - \exp(x/2) = 0$ nearest to $x = 0$. Apply an error tolerance of $\epsilon = 0.0010$ and provide the root correct up to 4 places of decimal. Present your numerical steps clearly in a table with full details. [2.5]

7. Find the roots of $x^3 - 18x = 35$ by Cardan's method. [2.5]

8. Find the roots of $x^4 + 5x^3 + 9x^2 + 8x + 4 = 0$ by Ferrari's method. [4]

$x^4 + 5x^3 + 9x^2 + 8x + 4$

$2P \quad q \quad 2R \quad s$

$(x^2 + Px + k)^2 = (ax+b)^2$

$+ (ax+b)^2$

$x^4 + P^2x^2 + k^2 + 2Px^3 + 2Pxk + 2kx^2$

$+ a^2x^2 + 2abx + b^2$

$= (ax+b)^2$

$x^4 + 2px^3 + (P^2 + a^2 + 2k)x^2$

$+ (2Pk + 2ab)x + k^2 + b$

-35

Scanned with CamScanner

Autumn Semester

Roll No._____

Academic Year 2019-20

Computational and Numerical Methods (SC374)

Second In-Semester Examination

Dhirubhai Ambani Institute of Information and Communication Technology, Gandhinagar

Time: 2 Hours

Total Marks: 25

All questions are compulsory. Answer all the sub-parts of a question together. Marks for each question are indicated next to it. All terms and symbols carry their standard textbook meaning.

1. Given $f(x) = x^2/(1+x^3)$,
   (a) Calculate the exact integral of $f(x)$ over the interval $0 \le x \le 1$.
   (b) Estimate $T_n(f)$ over the same interval for $n = 3$ and find the percentage error.
   Show both integration values up to four places of decimal. **[1+2=3]**

2. Given $f(x) = \sqrt{1-x^2}$, find $S_n(f)$ for $n = 2$ and $n = 4$ over the interval $-1 \le x \le 1$. Give both answers correct up to three places of decimal. **[3]**

3. Given the points $x_0 = 1$, $x_1 = 2$ and $x_2 = 4$, obtain $f(x) = \log_2 x$ at every point. Using $(x_i, f(x_i))$, produce Newton's divided-difference quadratic interpolation polynomial. **[3]**

4. Given the points $x_0 = 0$, $x_1 = 1$ and $x_2 = 2$,
   (a) Obtain $f(x) = x^3$ at every point. Use $(x_i, f(x_i))$ to carry out a linear Lagrange interpolation at $x = 8/7$.
   (b) Find the quadratic Lagrange interpolation polynomial. Interpolate at $x = 1/3$. **[2+2=4]**

5. Evaluate the numerical derivative of $f(x) = \ln x$ by using both the forward difference and the central difference formulae at $x = 2$ with $h = 1/16$. Provide your results correct up to five places of decimal, and evaluate the error with respect to the exact derivative in both cases. **[4]**

6. Evaluate the following by Gaussian quadrature using the approximation with two nodes.

$$\int_1^2 \frac{2x^3}{1+x^4}\,dx$$

Show your result up to five places of decimal. Also calculate the exact integral and estimate the percentage error with respect to the exact integral. **[4]**

7. Interpolate $(0,1)$, $(1,4)$ and $(2,10)$ with natural cubic spline functions. **[4]**

Scanned with CamScanner

Roll No._____

Autumn Semester

Academic Year 2019-20

Computational and Numerical Methods (CS374)

End-Semester Examination

Dhirubhai Ambani Institute of Information and Communication Technology, Gandhinagar

Time: 3 Hours

Total Marks: 25

All questions are compulsory. Answer all the sub-parts of a question together. Marks for each question are indicated next to it. All terms and symbols carry their standard textbook meaning.

1. Convert the second-order equation $xY'' - Y' + 4x^3Y = 0$, with $Y(1) = 1$ and $Y'(1) = 2$, to a system of first-order equations. **[1]**

2. Find the discriminant of $u_{xx} + 5u_{xy} + 6u_{yy} = 0$, and classify the partial differential equation. **[1]**

3. Given $Y'(x) = -xY$ and $Y(0) = 1$, estimate $Y(0.2)$ with $h = 0.1$ by Heun's method. Clearly write the Heun formula that is relevant to this initial-value problem, and provide your result correct to 3 places of decimal. **[3]**

4. Solve the following system by using an augmented matrix: **[3]**

$$2x_1 + 4x_2 - 6x_3 = -4$$
$$x_1 + 5x_2 + 3x_3 = 10$$
$$x_1 + 3x_2 + 2x_3 = 5$$

5. Given $Y'(x) = -2Y + \exp(-2x)$ and $Y(0) = 0.1$, integrate by the second-order Taylor method up to $n = 2$, with $h = 0.1$. Provide your result correct to 4 places of decimal. **[3]**

6. Consider the following system of nonlinear equations:

$$2xy - 3 = 0, \qquad x^2 - y - 2 = 0$$

   (a) Plot both the equations together on the x–y plane, showing the point of intersection clearly.

   (b) Using initial guess values $(x_0, y_0) = (1.5, 0.9)$ estimate (x_2, y_2) by the Newton method. Provide your result correct to 3 places of decimal. **[1+3=4]**

7. In the following initial-value problems take $h = 0.1$ and $n = 3$. Provide both results correct to 3 places of decimal.

   (a) Integrate $Y'(x) = x^2 - Y$, $Y(0) = 1$ by Euler's method.

   (b) Integrate $Y'(x) = 1 - 4Y$, $Y(0) = 1$ by the backward Euler method. **[2.5+2.5=5]**

8. Find the inverse of

$$\begin{bmatrix} 1 & 1 & 2 \\ 1 & 2 & 4 \\ 2 & 4 & 7 \end{bmatrix}$$

by performing Gaussian elimination on an augmented matrix. **[5]**

Scanned with CamScanner

CT303 - Digital Communications
Autumn 2019/20

In-Sem 1
Duration: 90 minutes

6th September 2019
Total Marks 20

Note: You may use any result/example derived/stated in class/lab without proof.

1. Assume that you are sitting at a point on the rim of a Ferris wheel, as you did in Lab-1. The only difference is that, the Ferris wheel is a *nested* one, i.e., a second wheel rotates about its center c_1 which is fixed on the rim of the first one (and moves with the first wheel), and a third wheel rotates about its center c_2 which is fixed on the rim of the second wheel (and moves with the first and second wheel). The wheels are each of radius r_0, r_1, r_2, each completing one rotation in $T, \frac{T}{2}, \frac{T}{4}$ seconds respectively with constant velocity, and center of the first wheel c_0 is fixed at the point $(0, h)$. Each wheel rotates in the direction indicated in Figure 1, and you are seated on the rim of the third wheel. [3+1]

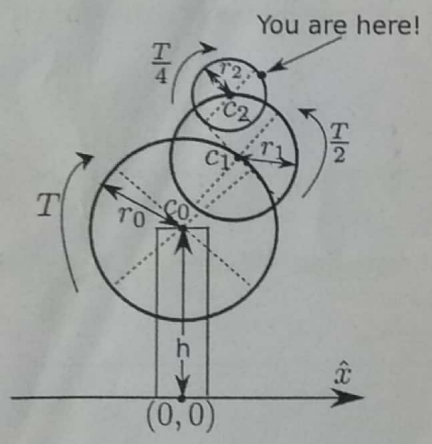

Figure 1: Nested Ferris wheel. Assume $\hat{y}$ along the height of the Ferris wheel, and $h > r_0 + r_1 + r_2$.

   (a) Assuming any starting position you want (draw it), describe your (x, y) position as a function of time.

   (b) What is the Nyquist sampling rate for sampling these functions.

2. Short Questions (and short answers):

   (a) Let $X(t)$ be a stochastic process with ACF $R_X(\tau) = k\delta(\tau)$, $\tau \in \mathbb{R}$, where $k \in \mathbb{R}$ is some positive constant. Find an LTI system (i.e. specify its impulse response h) such that if X is given as an input, the output stochastic process Y has a cross-correlation with the input X given by $R_{YX}(\tau) = \frac{1}{2}\cos(\tau), \tau \in \mathbb{R}$. [2]

   (b) Let $X(t)$ be a zero-mean White Gaussian stationary process with PSD N_0. Compute the variance of $X(t)$. [2]

   (c) Let $\eta(t)$ be a stationary zero-mean stochastic process that models noise. Let it contaminate a known but arbitrary deterministic signal $s(t)$ to yield the noisy signal (stochastic process) $Z(t) = s(t) + \eta(t)$. Find whether $Z(t)$ is stationary or not. [1]

Scanned with CamScanner

(d) Verify if the following functions are valid autocorrelation functions defined on $\mathbb{R}$ with justification. (a) $R_x(\tau) = \exp(-\tau)$, (b) $R_x(\tau) = (sinc(\tau T))^2$, (c) $R_x(\tau) = rect(\frac{\tau}{T})$. [3]

(e) Given a noiseless channel with bandwidth W Hz, state with justification the theoretical maximum symbol rate in symbols/sec that the channel can support? What about the maximum data rate in bits/sec? [2]

3. Consider a binary PCM signalling scheme with waveforms s_1 (for bit 0) and either s_2 or s_3 (for bit 1) as shown in Figure 2 below. For each waveform, determine the expression of the matched filter impulse response. On the receiver end, the bit transmitted is estimated based on which of the two matched filter produces a higher output every T seconds. Assume same prior probabilities, AWGN noise with PSD $\frac{N_0}{2}$ Watts/Hz and no inter-symbol interference. Compute the probability of error of the receiver with the matched filters (maybe in terms of the Q function, if possible), and decide which of the two waveforms s_2 and s_3 will you choose to represent bit 1. [6]

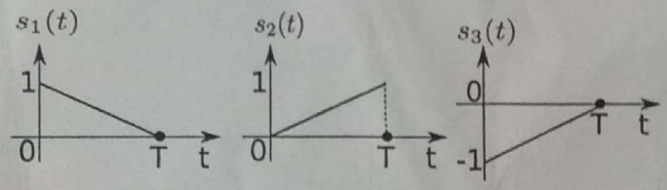

Figure 2: Binary PCM signaling. What will you prefer, $\{s_1, s_2\}$ or $\{s_1, s_3\}$?

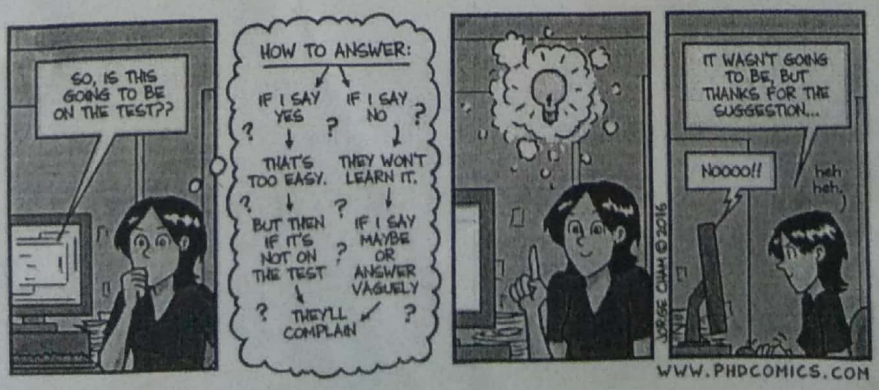

Scanned with CamScanner

CT303 - Digital Communications
Autumn 2019/20

In-Sem 2 | 22nd October 2019
Duration: 90 minutes | Total Marks 25

1. Which among the two equalization filters: Zero forcing solution and Minimum Mean-Square error solution is better? Justify and provide any assumptions made. [3]

2. Let $s_1(t) = \sqrt{\frac{2E}{T}}\cos(\omega_0 t), s_2(t) = \sqrt{\frac{E}{T}}\cos(\omega_0 t + \frac{3\pi}{4}), 0 \le t \le T$ be the two waveforms to be used for Binary bandpass communication. The demodulation/detection is to be performed using a coherent demodulator/detector shown in Figure 1 below, with matched filter impulse response $h(t) = \sqrt{\frac{2}{T}}\cos(\omega_0 t)$. Assuming prior probabilities for

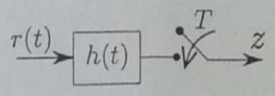

Figure 1: Coherent Demodulator/Detector.

bits 0 and 1 to be the same, find the optimal threshold γ to be used on z for detection, and compute/comment on the bit-error probability under AWGN assumption. [4]

3. Answer the following questions with short justifications. [3 × 6 = 18]

   (a) Let $s_1(t) = \cos(2\pi 100t), s_2(t) = \cos(2\pi 110t), 0 \le t \le 0.05$ secs be two waveforms. In terms of the bit-error performance, should we be using a coherent or non-coherent binary OFSK demodulation/detection? What if the second waveform is changed to $s_2(t) = \cos(2\pi 120t)$ for the same T?

   (b) Data generated at a rate 1024 bits/second is to be transmitted using M-ary PSK with M = 4, and carrier frequency $f_0 = 1$ MHz. What is the theoretical minimum channel bandwidth required to support this communication without introducing ISI?

   (c) In binary OFSK modulation schemes with minimum separation, two carrier frequencies are used, say f_1, f_2 Hz. The OFSK signal at any time will contain only these two frequencies. Does the bandwidth of the OFSK signal then depend on the data rate?

   (d) The worst performing digital communication system is one with a bit-error probability 1. Is that right? Justify.

   (e) A waveform $p(t)$ with Fourier transform $P(f)$ is shown in Figure 2 below. Assuming a channel bandwidth of $\frac{1}{T}$ Hz, will there be any ISI?

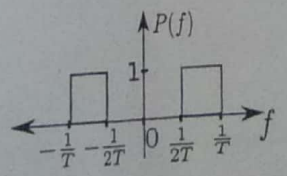

Figure 2: Fourier transform $P(f)$ of the waveform $p(t)$.

   (f) In DBPSK quadrature demodulator, one needs to compute the phase for each waveform using $\phi = \tan^{-1}\left(\frac{y}{x}\right)$. The range of $\tan^{-1}$ is known to be $[-\pi/2, \pi/2]$. How can we resolve this issue? Do not simply state MATLAB functions that do the job, explain how is this handled.

Scanned with CamScanner

CT303 - Digital Communications
Autumn 2019/20

End-Sem Examination
Duration: 120 minutes

25th November 2019
Total Marks 25

1. Let $X(t)$ denote the stochastic process that generates NRZ-L pulse waveforms with pulse width T secs, for bit streams where the bits are independent. Let $X_d(n) = X(nT_s)$ be the sampled stochastic process with $T_s = T/10$ sec. Describe the autocorrelation matrix $R_{XX}(m,n)$, and conclude with proper justification whether the process X_d is stationary or not. [4]

2. Let $p_1, p_2, s_i, i = 1, \ldots, 4$ be sinusoid pulses as shown in Figure 1 below. [2+3=5]

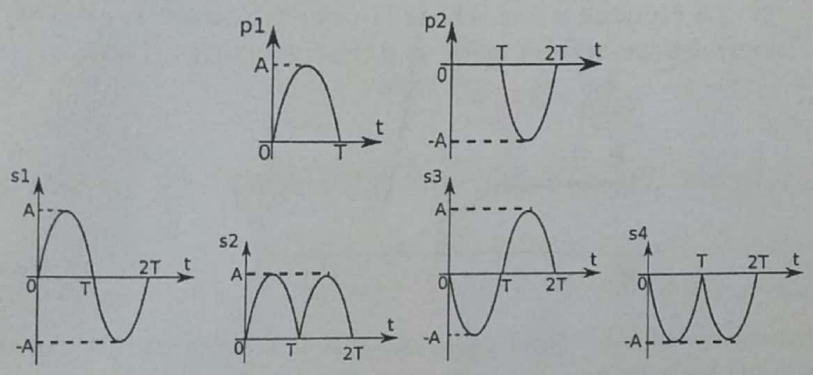

Figure 1: Sinusoid Symbol waveforms

(a) Write the expressions of the waveforms $s_i, i = 1, \ldots, 4$ in terms of the waveforms p_1, p_2.

(b) Represent the waveforms $p_1, p_2, s_i, i = 1, \ldots, 4$ in a 2D signal space diagram. With which modulation scheme does the signal space representation bear similarity with?

QPSK

3. For a binary digital communication scheme let the two symbol waveforms be given by $s_1(t) = 0,\ 0 \le t \le T,\ s_2(t) = \sqrt{\frac{2E}{T}}\sin(2\pi f_0 t), 0 \le t \le T$. Assume that the channel is affected by AWG noise, and does not introduce any ISI. [3+2=5]

(a) Sketch the block diagram of the demodulator/detector using non-coherent detection and envelope detection, with a brief explanation.

(b) Let z_1 and z_2 be the sampled output of the two arms of the non-coherent demodulator. Determine the pdf of z_1 and z_2.

4. Answer the following questions briefly: [2+2+3+2+2=11]

(a) It is well known that the Matched filter maximizes the SNR at its *output* at multiples of T secs. What is the assumed SNR at the input of the Matched filter? Justify.

(b) The Euclidean distance between any two nearest signals represented in the constellation diagram for 8-PSK is 10 units. Determine the energy of the signals.

Scanned with CamScanner

(c) A channel with AWG noise with PSD $N_0 = 10^{-5} W/Hz$ and a bandwidth of 100 kHz is available for communication. What is the maximum bit rate that can be transmitted through the channel using (a) QPSK, (b) BPSK, and (c) 4-OFSK with non-coherent detection.

(d) Let $n(t)$ be a stationary stochastic process whose PSD is $N(f)$, with $N(f) \neq 0, \forall f$. Determine the frequency response of a filter whose output is a *white* stochastic process, when the input is $n(t)$.

use this for f_1

(e) Binary data is to be transmitted at a rate 1 Mbps over a channel with bandwidth 700 kHz, using a Nyquist pulse whose Fourier transform is sketched below in Figure 2. Determine the roll-off factor and the frequencies f_1 and f_2.

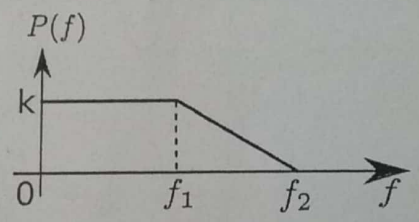

$r = 0.4$

10^3

$r = \frac{f_2 - f_1}{f_1}$

Figure 2: Fourier transform of a Nyquist pulse, $k \in \mathbb{R}$ is some arbitrary constant. Only positive frequencies have been shown, assume symmetry for negative frequencies.

$f_s = 2f_m$

10^3

1 mbps

bps

Scanned with CamScanner

Dhirubhai Ambani Institute of Information & Communication Technology
Mid Semester Test-1, 1st Semester 2019- 20

Course Title	IT304 Computer Networks		**Max Marks**	20
Date	5 September 2019	**CLOSED BOOK**	**Time**	90 min

In protocol design problems,

- Give a brief description of how your protocol functions.
- Provide the details of the message structure, message sequence, timer functions (if needed), and other actions performed by the nodes.

---

1. Consider an application that transmits data at a steady rate (for example, the sender generates an N-bit unit of data every k time units, where k is small and fixed). Also, when such an application starts, it will continue running for a relatively long period of time. Would a packet-switched network or a circuit-switched network be more appropriate for this application? Why? circuit because overhead in Packet [2]

2. Derive a formula for the end-to-end delay of sending one packet of length L over N links of transmission rate R. Generalize this formula for sending P such packets back-to-back over the N links. Ignore all other type of delays. [3]

3. For a router with a single queue, answer the following:
   a. Suppose N packets arrive simultaneously at a free router with empty queue. Each packet is of length L and the router has the processing rate R. What is the average queuing delay for the N packets?
   b. Now suppose that N such packets arrive to the link every LN/R seconds. What is the average queuing delay of a packet? [3]

4. What are the five layers in the Internet protocol stack? What are the principal responsibilities of each of these layers? Be very brief. routing, formatting, error, framing, bits to signal [3]

5. How do you achieve cooperation among the nodes in a p2p application? Explain using a Bit-Torrent type application. [3]

6. Assuming that the root and TLD servers are always *iterative* and other lower level servers are *recursive*, write down the queries and responses for resolving *iter.ipr.res.in* from *lab1.daiict.ac.in*. rec [3]

7. A server on a LAN provides correct time to all the client nodes. Clients request the server for the correct time Ts but must also estimate the total delay ΔT from the server to the client to properly synchronize its clock. Design a protocol to achieve this task. [3]

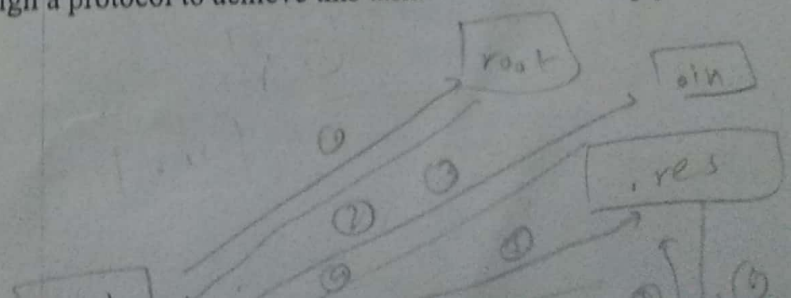

Scanned with CamScanner

Dhirubhai Ambani Institute of Information & Communication Technology
Mid Semester Test-2, 1st Semester 2019- 20

Course Title	IT304 Computer Networks		**Max Marks**	20
Date	23 October 2019	**CLOSED BOOK**	**Time**	90 min

In protocol design problems,

- Give a brief description of how your protocol functions.
- Provide the details of the message structure, message sequence, timer functions (if needed), and other actions performed by the nodes.

---

1. For any link running Stop & Wait protocol,
   a. Write the expression for RTT in terms of relevant parameters. What is the effect of setting the timeout value in this protocol "too high" or "too low"?
   b. Derive the efficiency of the protocol as a function of <RTT>, packet loss probability P, and other relevant parameters.
   c. Using an example, show that this protocol may not work correctly for non-FIFO links. [1+1+1]

2. Nodes in a network use flooding to periodically send a packet to all the other nodes. Diameter **D** of the network is known. Propose a controlled flooding protocol. Describe the packet format and actions performed at intermediate nodes to minimize the communication overhead [3]

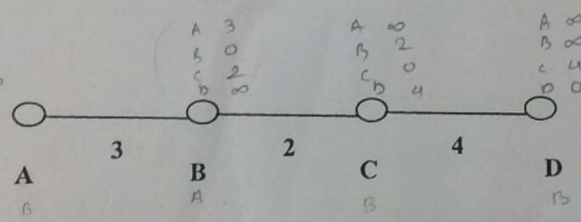

3. For the network given in the figure above, work out the distance vectors and the routing table at **A** at the end of round 1 and round 2 of vector exchange. [3]

4. A transport layer protocol like TCP relies only on the information maintained by itself and received from the receiver.
   a. What are the information available to a TCP sender?
   b. Describe the TCP timeout timer estimation for each packet. Justify this specific formulation.
   c. How is the flow control achieved? [3]

5. What are switching element and switching fabric? Draw the schematic of a 16x16 Banyan switch. Explain how this design removes bottleneck of earlier generation routers? [1+2+1]

6. In the context of TCP protocol,
   a. Explain the purpose and mechanism of connection establishment and termination in the TCP protocol. Also give the reasons for these specific mechanisms used for the purpose.
   b. Briefly explain the slow-start algorithm. Derive an expression for the average TCP throughput. [2+2]

Scanned with CamScanner

Dhirubhai Ambani Institute of Information & Communication Technology
Final Examination, Semester I 2019-20

Course Title	IT304 Computer Networks		**Max Marks**	40%
Date	29 November 2019	**CLOSED BOOK**	**Time**	2 Hours

Questions are worth 5 marks each.

1. Explain the important modifications done in IPv6 compared to IPv4. Describe the mechanisms used for incremental deployment of IPv6 and co-existence with IPv4. What is the role of flowID field in IPv6?

2. Briefly describe the operation of slotted ALOHA. For a system with large number of active nodes N, find the expression for system efficiency. What should the efficiency be for unslotted ALOHA – explain.
half.

3. Describe the functioning of a switched hub in a LAN. How does it learn the changes in the LAN configuration? Explain the concept of VLAN and the functioning of a port-based Level-3 switch.

4. IPv6 is designed to support quality of service (QoS) provisioning for applications. As part of this, routers need to implement proper scheduling mechanisms for application flows.
   a. Describe the scheduling discipline for CBR traffic. CBR stands for constant bit-rate traffic. Assume fixed packet size.
   b. Do the same for VBR traffic. VBR stands for variable bit-rate traffic that is characterized by the average rate and maximum burst size.

5. A router is said to be congested if its buffer and packet forwarding resources are inadequate to handle incoming flows for a sustained period. In this context,
   a. What is the effect of congestion on the TCP and UDP flows passing through the same router?
   b. Explain if TCP congestion recovery mechanism is **fair** to the TCP and UDP flows.

6. For a p-persistent CSMA/CD with N active nodes, find the relation between p and N that maximizes the LAN efficiency. Find the expression for this maximum efficiency as a function of relevant LAN parameters.

7. Using clear examples, briefly explain how DHCP and NAT protocols help in more efficient use of the Internet address space. Does it make sense to use them together? Explain.

8. A second-generation datagram switch may occasionally reorder packets. Explain how? Propose a modification in the switch design/functioning that will ensure no reordering. Has this functionality come at a cost of performance? Explain.

$1 + pT + (1-p)(1+\langle n \rangle)$

$a =$

Scanned with CamScanner

READ THE INSTRUCTIONS CAREFULLY

DA-IICT, Gandhinagar
EL203: EHW, Sep 04, 2019 (Wednesday) INSEM-I
Duration: 120 minutes
Total Marks: 100

All Questions Carry Equal Weightage.

No Calculators allowed.

1. Convert the two binary numbers 0111 and 1100 to Gray code numbers and add. Design a 4-bit adder to support the addition of the above gray code numbers. Discuss if there exists any difference of the above gray code adder (area, speed) with the ripple carry adder.

2.
   a. If the cost of development or non-recurring cost of an electronic system is expressed as NRE and the cost of manufacturing each copy of the system (unit cost) is UC, what is the total cost (TC) of the design, if Q quantity of units is manufactured? What is the final cost (FC)?
   b. Discuss briefly with example, the following:
      i. Dedicated Systems
      ii. Reconfigurable Systems
      iii. Programmable Systems
   c. Draw the data dependency block diagram for the system adopting
      i. Von-Neumann Architecture
      ii. Harvard Architecture

3. In a single precision floating point representation
   a. What is the smallest value?
   b. What is the largest value?
   c. What is the relative precision?
   d. Represent -0.8125 using
      i. a 16 bit fixed point (signed) number system
      ii. single precision floating point number
   e. What number is represented by the following single precision float number represented as $(11000001100010000000000000000000)_2$

Scanned with CamScanner

4. For the following network, the propagation delays of the input and the output network are: delay_C1 = delay_y = 2.5ns; delay_C2 = 3ns.
The setup of the register $t_{(su)}$=0.3ns, and the propagation delay is t_p= 1ns.

The network stabilizes no later than t_{in}=2ns after the clock triggers; the output needs to be stable for t_{out} = 3ns before the next triggering edge.

What is the maximum clock frequency?

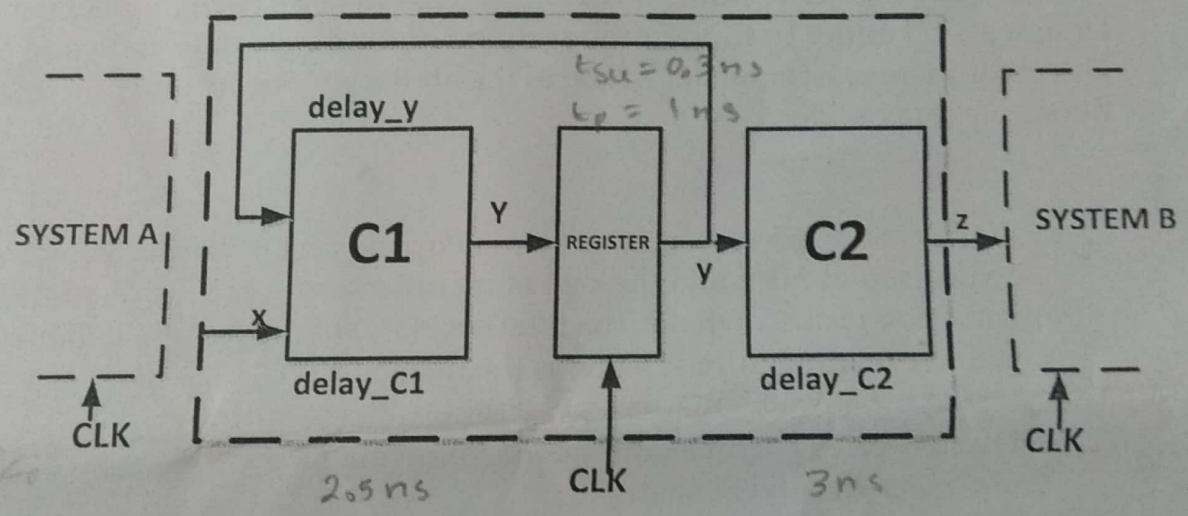

-END OF PAPER-

Scanned with CamScanner

DA-IICT, Gandhinagar
EL203- Embedded Hardware Design
Oct 24, 2019 (Thursday)...Exam: Insem-II
Duration: 60 minutes (Time: 1100hrs-1200hrs)
Total Marks: 100

Each question carries equal marks
Calculators are not allowed.

1. A carpenter has a rectangle piece of wood 25 inches by 36 inches in his workshop. He needs a square piece of wood out of this. Fortunately, he manages to make a perfect square out of this rectangle piece.

   Draw the square wood (with dimensions). Additionally, help the carpenter find the perimeter of the square block using an 8bit carry save adder (CSA). Remember that CSA is capable of performing multi-operand additions.

   Let us know how you helped this carpenter!

   Full marks to those who help this carpenter for an efficient solution! Any wastage of resources (wood) is an inferior solution and will be penalized.

2. Your friend is coordinating a getaway trip after the examinations, and asked you to send the first letter/alphabet (in ASCII) of your name with odd parity to him electronically. He can receive the data over only
   i. RS232 and
   ii. SPI interface.

   Mention the data, CLOCK, START, STOP bit, odd parity scheme and any other signals wherever applicable in your timing diagram(s). Draw both the transmitter (you) and the receiver (friend) side and label the pins clearly within the block diagram for both the protocols.

   Note: You may miss out on the fun if you are unable to send the information correctly, he has asked for!

Scanned with CamScanner

3. You are given two resistors that are connected in parallel. The total resistance has been measured at 2 Ohms, and one of the resistors is known to be 3 ohms more than the other. What are the values of the two resistors? The two resistors now have to be added up using an ALU.

Please use the following ALU datapath to find the R_{Total}. The formula to work out the total resistance is "R_{Total}" and should be expressed as a sequence of control strings that configures the multiplexers. Specify the number system (signed, unsigned, 2's complement etc.) for addition of the two resistors in the ALU datapath. What will be the output at Y where N =32? Please mention the steps clearly for the above computation.

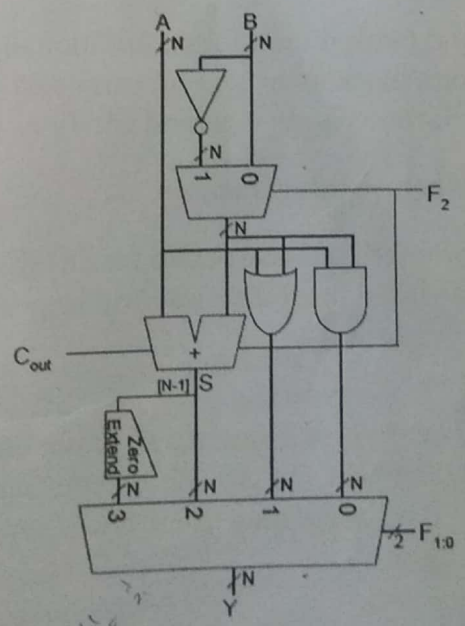

- End of Paper -

Scanned with CamScanner

DA-IICT, Gandhinagar
EL203: Embedded Hardware Design
26th Nov, 2019 (Tuesday)...Exam: Final
Duration: 120 minutes (Time: 1430hrs-1630hrs)
Total Marks: 100

REGISTRATION NOS: 201701445
NAME: .....Manvi Chauhan

---

1. Use a 3-input Look Up Table (LUT) to realize a function $x=ab + bc$. [10 marks]

2. Determine the values of A. B, C and D necessary [30 marks]
   a. To test for p s-a-1. Specify the other faults tested by this input vector.
   b. To test for the fault condition so and to to be tested.

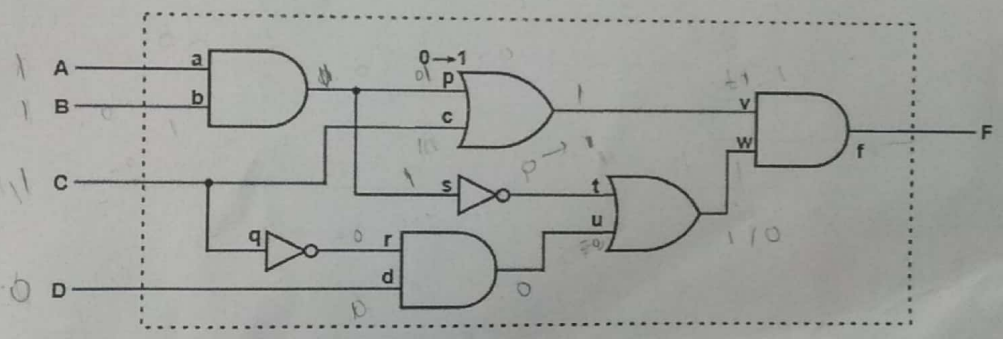

3. Design a pattern detector circuit that extracts the pattern "10010" from an input serial bit-stream. The circuit receives a new bit every clock cycle from its input "***in***" and has an output "***out***" used to indicate a pattern has been detected. ***out*** is pulled high for 1 clock cycle to indicate a pattern is detected, and then pulled low to prepare for the next match. [30 marks]

   a. Draw the state diagram of this circuit, marking the transition conditions and output values. The detected patterns should not overlap, *i.e.* it should take at least 5 more cycles after a pattern is detected to detect another pattern.
   b. Draw an updated state diagram of your circuit if you want overlapping patterns to be detected as two patterns, i.e. "10010010" should have two pattern detection events in it. Use a Moore state machine for your implementation.
   c. Modify your state diagram to implement the above part as a Mealy state machine.

Mealy Moore

Scanned with CamScanner

4. Realize the following SM chart using a PLA and D flip-flops that trigger on the falling edge of the clock pulse. Draw a block diagram and give the PLA table.

[30 marks]

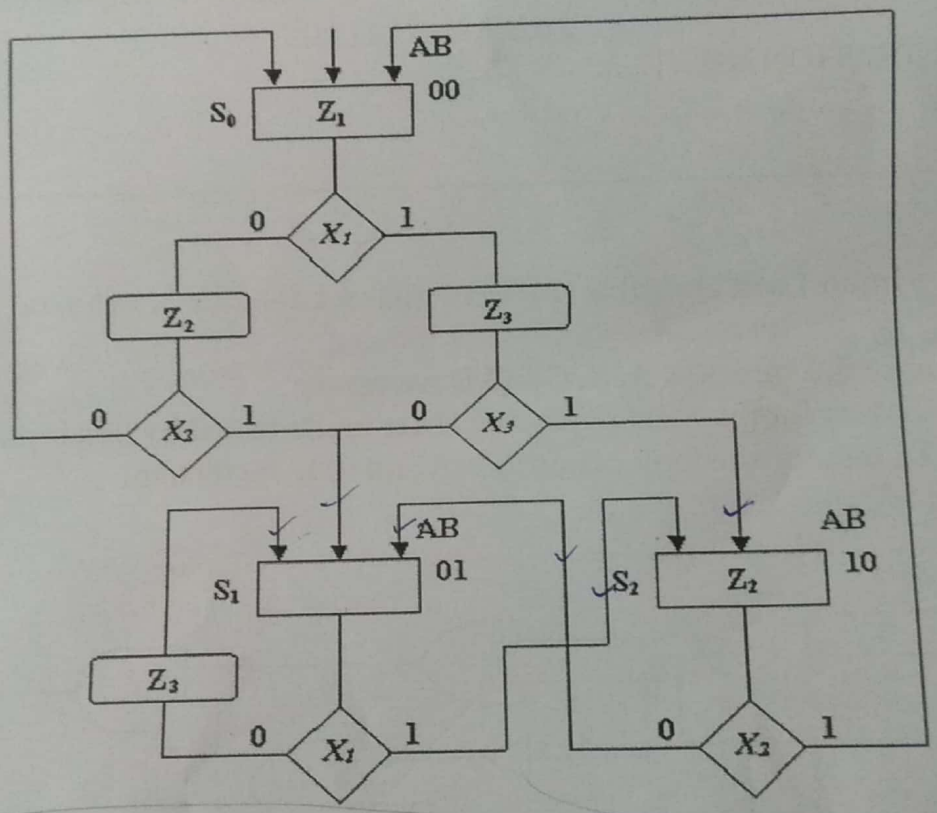

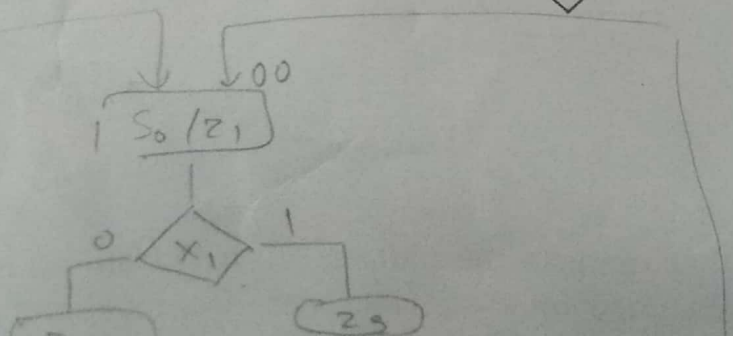

A = $X_3 X_1$ +

B

Z_1

Z_2

Z_3

Scanned with CamScanner

In-Semester Exam-I (Autumn'2019)

IT 214 Database Management Systems

Time: 90 minutes

Max Points: 100

IMPORTANT NOTE:

1. Write answers neat and clean. Answers that are difficult to read may simply be discarded.
2. In all questions marks awarding strategy will be discrete (i.e., 0, half, and full marks).
3. You may have to pay penalty for lengthier solutions.

Consider following relational schema for storing various students' related data. Brief description is also given alongside.

student(id, name, prog_id, batch, cpi)
-- attribute **prog_id** is like '01' for BTech, '11' for M.Tech, '12' for MScIT, and so
-- Assume that this relation stores data of only current students of the institute; say all past data
-- have been archived.

room(rno, wing, floor)
-- the relation stores details of rooms
-- floors are represented by numbers 0 (Ground), 1(First), and 2 (Second), and so

allot(sid, rno)
-- The relation records residential facts of students. Note that that RNO cannot be NULL.
-- SIDs' of students who are not residing hostel does not appear here.

registers(studid, courseno, grade)
-- let this relation be storing academic performance of students.
-- let us not record year/sem of student taking the course, grade is latest grade in course, if repeated
-- let the grades be stored as AA, AB, and so forth.

grade2point(grade, point)
-- the relation records mapping from letter grade to numeric value.
-- as AA --> 10, AB --> 9, and so forth

sid clubid clubname

clubs(clubid, club_name)
~~-- the relation records all the offers that are made to students in 2018.~~

clubmembers(sid, clubid)

Write **expressions in Relational Algebra** to answer queries in following ~~five~~ seven questions.
(No marks will be awarded if answered in SQL)

7x10

1. Give list (id, name, progid, cpi) of students who are residing in E wing, second floor.
2. Give list (id, name) of students from B.Tech. 2nd second year (2018 batch) who are residing in E wing.
3. Give list (id, name) of students who are singly occupying rooms. (Note that a room is to be allocated to multiple students, typically two)
4. Give list of students (*) B.Tech. 1st year (2019 batch) who do not reside in hostel.
5. What is average grade point in the course 'Algorithms' (IT215) of students who are member of 'Programming Club'?
6. Give program wise count of students in 'Programming Club'.
7. Give program wise percentage of students residing in hostel for each program. Assume that student relation contains data of current students only.

Scanned with CamScanner

8. Consider relations - R1(StudID, CourseNo, Grade) and R2(StudID, EventID).
Suppose, we need to compute CourseNos in which all students that are participating in event-id=3 have taken. Let us say this problem can be solved by division operation. Write sequence of operations performing division operation without using division operator.

10

9. Read following description for a database design and produce a **Neat ER Diagram**.

Suppose we need to design database for an online book store ***Abazon***. Let us say *Abazon* wants to have a database to store required data for books, authors, publishers, and distributers. For Books we record ISBN, Title, PubYear, Price, Authors information. ISBN is a unique number that every published book has. Book can be authored by multiple authors. For Authors, let us say we record ID, Name, Email, Affiliation, BriofBio. Every book is published by some Publisher. For publisher, let us say we record ID, Name, City. A publisher can be located in multiple cities. Also there is concept of Distributors. Publishers do not sale book directly. Books are sold through distributers, and book stores buy book from distributors. Let us say, we record ID, Name, and Address (location, City, PIN) for distributors. *Abazon* is on a policy that they buy a book (one ISBN) from single distributor. This gives *Abazon* a good bargain in buying books. However *Abazon* can buy multiple books from a distributor. We also record in what price *Abazon* gets a book from the distributer.

Your ER Diagram should be clearly depicting Entities, Attributes and Key Attributes, Relationships and related constraints. If you find do not find explicit mention of any constraints, you can make necessary assumption, and depict accordingly. However, you should not be ignoring explicit mention of a constraint. You are not expected to add additional attribute, and drop any of attributes.

20

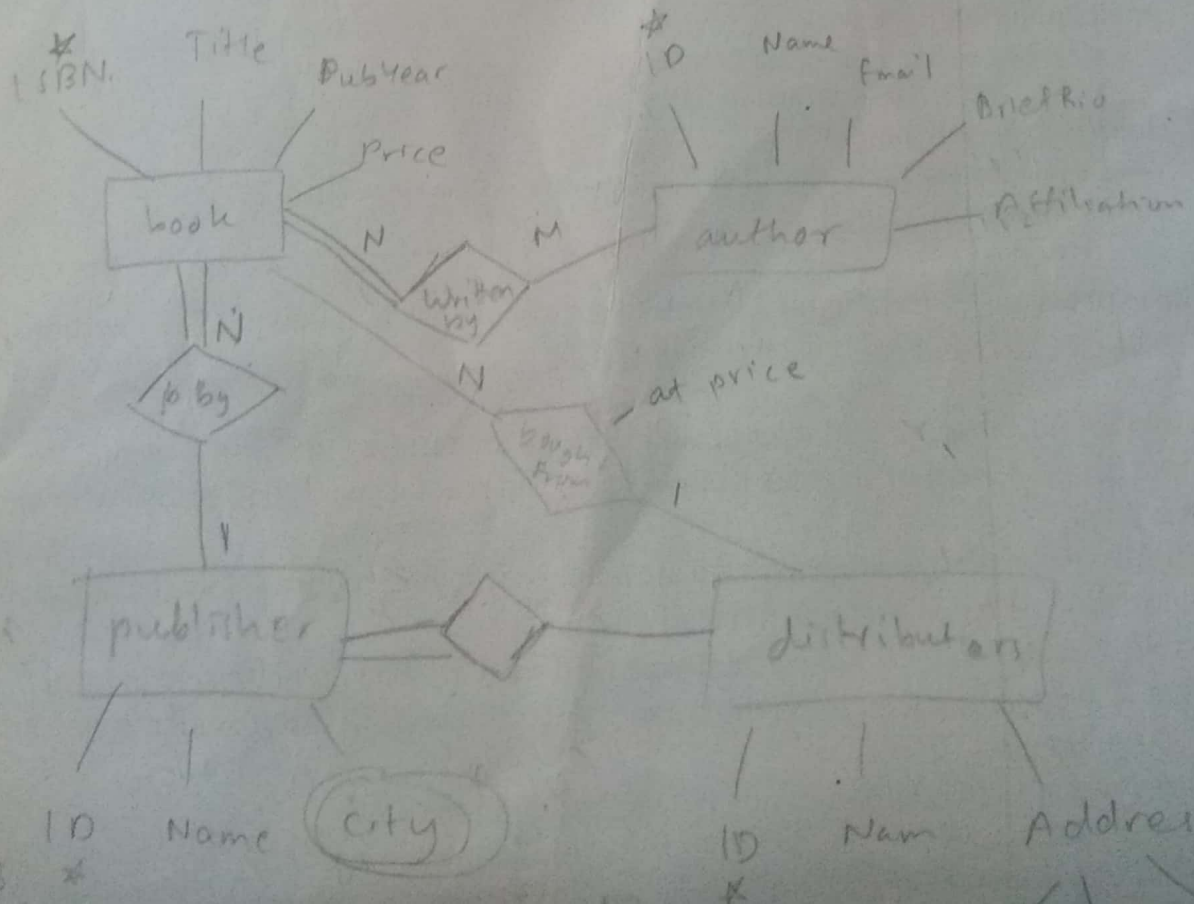

Scanned with CamScanner

In-Semester Exam-II (Autumn'2019)

IT 214 Database Management Systems

Time: 90 minutes

Max Points: 100

IMPORTANT NOTE:

1. Write answers neat and clean. Answers that are difficult to read may simply be discarded.
2. In all questions marks awarding strategy will be discrete (i.e., 0, half, and full marks).
3. You may have to pay penalty for lengthier solutions.

Consider following relational schema for storing various students' related data. Brief description is also given alongside.

student(id, name, prog_id, batch, cpi) sid
-- attribute **prog_id** is like '01' for BTech, '11' for M.Tech, '12' for MScIT, and so
-- Assume that this relation stores data of only current students of the institute; say all past data
-- have been archived.

room(rno, wing, floor)
-- the relation stores details of rooms
-- floors are represented by numbers 0 (Ground), 1(First), and 2 (Second), and so

allot(sid, rno)
-- The relation stores residential facts of students. Note that that RNO cannot be NULL.
-- SIDs' of students who are not residing hostel does not appear here.

course(courseno, course_title, credit, coursetype)
-- the relations stores basic information of courses. Course type: core and elective.

offers(termid, courseno, facultyid)
-- The relation stores instances of course offerings. For example-<AUT17, IT214, I001>

registers(termid, courseno, studid, grade) sid
-- let this relation be storing academic performance of students.
-- let the grades be stored as AA, AB, and so forth.

grade2point(grade, point)
-- the relation records mapping from letter grade to numeric value.
-- as AA --> 10, AB --> 9, and so forth

clubs(clubid, club_name)
-- the relation records all the offers that are made to students in 2018.

clubmembers(sid, clubid, role)
-- role is like 'conveyor', 'member', or so.

HMC(wing, floor, hmc_representative)
-- Let us say we have one student as HMC member for each floor.
Assume that attribute hmc_representative cannot be NULL.
We have no tuple here for floor for which no HMC representative.

(offers * registers)
grade=AA

Write **expressions in Relational Algebra** to answer queries in following five questions.
(No marks will be awarded if answered in SQL)

5x10

1. List (Wing, Floor) for floors that do not have HMC members.
2. List (Club_name, convenor_name) for all clubs.
3. List (id, name, progid, cpi) of students who are residing in E wing, second floor and have cleared course of 'Algorithms' (IT215) with grade BC or higher.
4. List (id, name) of BTech (progid=01) students whose room mate is MSc(IT) student. Assume that there can be at most two students in a room.
5. Suppose we need to compute that to what fraction of students a faculty awards AA grade in semester AUT17. List (FacultyId, fraction).

BTech students

Scanned with CamScanner

6. Read following description for a database design and produce a **Neat ER Diagram**.

Consider the scenario of placement activities at your institute. Let us say, placement database is separate from e-campus and other institutional databases.

Companies visiting to institute and students interested for placement require registering through a web interface. Note that placement database may turn out to be complex, therefore limit the scope within data requirement and constraints mentioned in given description here.

For companies, registration is two-step process - First time registration and Visit Registration. On first time registration let us say they provide information of Company ID (Unique), Name, Address, Contact Person's Name, Email, and Phone. In Visit registration, following information about company's visit are captured – profile-name, profile category ('A', 'B', and so), CTC offered for the profile, minimum CPI. Let us say companies require separate visit registration for each profile for which they come. Once visit registration is done, placement office allocates a visit date to a profile registration in consultation with company contact person.

Students who are interested in placement require registering. Student registration is also two-step process, basic registration and profile registration. Basic registration is only once for a drive, and following information is provided – ID, Name, ProgramID, CPI. Let transcript of every student is also stored. For transcript, we store semester wise following information – semester no (1,2,3, or so), acadyr, semester (aut-1, wint-2, summer-3), list of courses (courseno, title, credit, grade), semester SPI. [while creating ER diagram, be careful of redundancies here].

Students require doing profile registration for every profile student is interested in. No additional information is furnished at the time of profile registration – just interest is stored.

Once student registrations are done, companies visit the institute for conducting recruitment process at institute. Let us say we do not record anything for recruitment process; we only record final offers that are made. For offers we store what company makes offer to which student and for what profile. Let us assume that for each offer that is made, we also store – offer no (can assume to be unique), CTC, joining date, joining city name.

Scanned with CamScanner

DA-IICT

Dhirubhai Ambani Institute of Information and Communication Technology (DA-IICT)

Mid Semester Examination

IE406 (Machine Learning)

Date of Examination: Oct 25, 2019

Duration: 2:00 Hours

Pl. note that writing the relevant points will only carry marks.

Q1: For the quadratic curve $y = c_0 + c_1 x + c_2 x^2$, obtain the best quadratic least squares fit for the following data by using pseudo inverse. (5 marks)

x	0	1	2	3
y	3	2	4	4

Q2: In the class we showed that sample mean is an unbiased estimate of true mean. Now, one wants to compute the variance by using samples. (a) In practice, what expression is used for this? (b) Is that an unbiased estimate of true variance? Prove it. (c) If not what modification you suggest to compute sample variance to make it unbiased. Prove it. (1+3+1 marks)

Q3: (a) State Stein's Lemma. (b) Using the same and considering a Gaussian random variable X with mean 2 and variance 4 and the function of the random variable as 2X+3, verify Stein's Lemma, (1+3 marks)

Q4: Find three numbers x,y,z that sum to 100 and has the largest product by formulating the problem as constrained optimization (3 marks)

Q5: (a) Write the primal optimization problem formulation to find the parameters of hyperplane in SVM for Hard margin case, (b) Considering n+1 parameters, write the Lagrangian. (c) Now, applying KKT conditions arrive at the dual optimization problem formulation, (d) Knowing the optimum Lagrange parameters, write the expressions used to get the hyperplane parameters. (1+1+2+1 marks)

Q6: (a) Give the general expression for Kernel function used in SVM. (b) Write the expression for Gaussian Kernel. (c) Now, write the modified dual problem formulation for Q5, when a Kernel function is used to solve the problem, (d) Write the expression for decision boundary in this case. Can you find the optimum parameters here? If not why? (0.5+ 0.5+ 1+1 marks)

Scanned with CamScanner