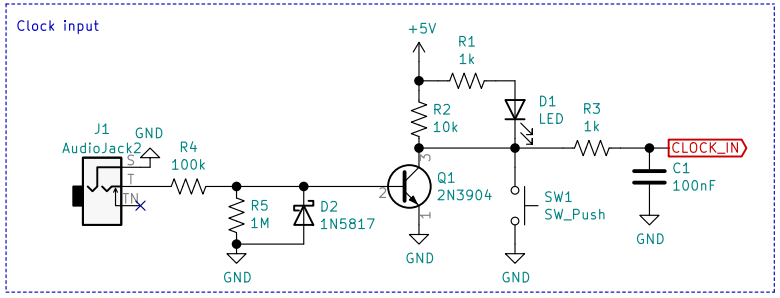

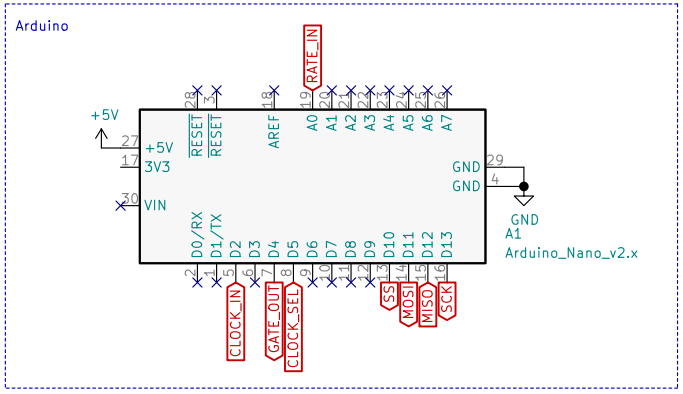

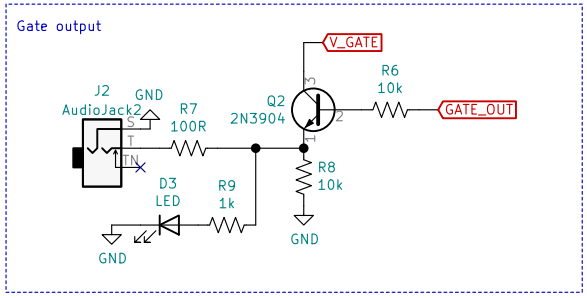

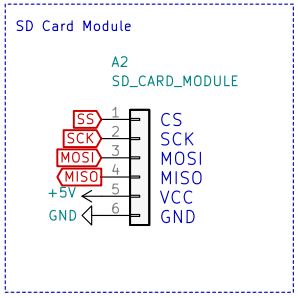

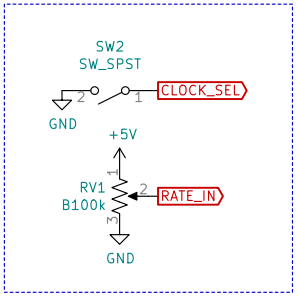

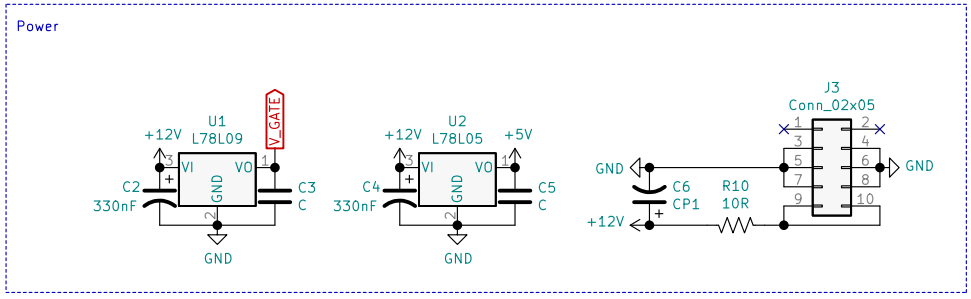

TimMJN

Sheet: /

File: arduino_morse_gate_generator_schematic.sch

Title: Arduino Morse Gate Generator

Size: A4	Date:	Rev:
KiCad E.D.A. eeschema (5.1.8)-1		Id: 1/1