Use aggregate relocation to upgrade controller hardware

AFF and FAS Controller Upgrade

NetApp
May 20, 2022

This PDF was generated from https://docs.netapp.com/us-en/ontap-systems-upgrade/upgrade-arl/index.html on May 20, 2022. Always check docs.netapp.com for the latest.

Table of Contents

Use aggregate relocation to upgrade controller hardware . . . 1
- Use aggregate relocation to upgrade controller hardware . . . 1
- Use "system controller replace" commands to upgrade AFF A700 to AFF A900 running ONTAP 9.10.1 or later . . . 1
- Use "system controller replace" commands to upgrade controller hardware running ONTAP 9.8 or later . . . 65
- Manually upgrade controller hardware running ONTAP 9.8 or later . . . 150
- Use "system controller replace" commands to upgrade controller hardware running ONTAP 9.5 to 9.7 . . . 284
- Manually upgrade controller hardware running ONTAP 9.7 or earlier . . . 371

Use aggregate relocation to upgrade controller hardware

Use aggregate relocation to upgrade controller hardware

This content describes how to upgrade the controller hardware without disruption by using aggregate relocation (ARL).

For other methods of upgrading your controller hardware, refer to References to link to *Upgrade by moving volumes or storage*.

You can nondisruptively upgrade the controller hardware on a pair of nodes running ONTAP by migrating non-root aggregates from the original nodes to the new nodes in the same cluster. The data hosted on the nodes that are being upgraded is accessible during the upgrade.

ARL takes advantage of the HA configuration to give you the capability you to move ownership of non-root aggregates from one node to another if they share storage within the same cluster.

There are two ARL methods for upgrading your controller hardware, using system commands or performing a manual upgrade. Before you start, you must verify that you have selected the correct content for your controller hardware upgrade.

If you are performing an upgrade by using system commands refer to the following table:

If you're running this ONTAP version…	To upgrade with system commands, use…
9.10.1 or later	Use "system controller replace" commands to upgrade AFF A700 to AFF A900 running ONTAP 9.10.1 or later
9.8 or later	Use "system controller replace" commands to upgrade controller hardware running ONTAP 9.8 or later
9.5 to 9.7	Use "system controller replace" commands to upgrade controller hardware running ONTAP 9.5 to ONTAP 9.7

If you are performing a manual upgrade refer to the following table:

If you're running this ONTAP version…	To manually upgrade, use…
9.8 or later	Manually upgrade controller hardware running ONTAP 9.8 or later
9.0 to 9.7	Manually upgrade controller hardware running ONTAP 9.7 or earlier

Use "system controller replace" commands to upgrade AFF A700 to AFF A900 running ONTAP 9.10.1 or later

Overview

This procedure describes how to upgrade the controller hardware using aggregate

relocation (ARL) for the following system configuration:

Method	ONTAP version	Supported systems	Description
Using `system controller replace` commands	9.10 or later	AFF A700 to AFF A900	Converts an AFF A700 to an AFF A900 by keeping the same chassis

You can nondisruptively upgrade controller hardware on a high availability (HA) pair of AFF A700 nodes to an AFF A900 system by swapping the controller module and the NVRAM module. You migrate the non-root aggregates between the AFF A700 nodes. After installation, you then migrate the non-root aggregates from the AFF A700 nodes to the AFF A900 nodes. The data hosted on the nodes that you are upgrading is accessible during the upgrade procedure.

About this task

During this controller upgrade procedure, you upgrade an AFF A700 to an AFF A900 system.

> You swap only the two field replaceable units (FRUs) on each node on the AFF A700 system with the new FRUs. You do not need to move, disconnect, or reconnect the I/O cards, data cables, disk shelves, and disks.

This procedure uses a method called aggregate relocation (ARL), which takes advantage of the HA configuration to enable you to move ownership of non-root aggregates from one node to another if they share storage within the same cluster.

During the procedure, you upgrade the original controller hardware with the replacement controller hardware, relocating the ownership of non-root aggregates. You migrate aggregates multiple times from node to node to ensure that at least one node is serving data from the aggregates throughout the upgrade procedure. You also migrate data LIFs between nodes in the cluster as you proceed.

> The terms **node1** and **node2**, are used only as a reference to node names in this document. When following the procedure, you must substitute the real names of your nodes.

Important information

- This procedure is complex and assumes that you have advanced ONTAP administration skills. You also should read and understand the Guidelines for upgrading from an AFF A700 to an AFF A900 with ARL and the Overview of the ARL upgrade sections before beginning the upgrade.
- This procedure assumes that the replacement controller hardware is new and has not been used in another system. The steps required to prepare used controllers with the `wipeconfig` command are not included in this procedure. You must contact technical support if the replacement controller hardware was previously used as part of another ONTAP cluster or as a standalone single node system.
- You can use this procedure to upgrade the controller hardware in clusters with more than two nodes; however, you need to perform the procedure separately for each HA pair in the cluster.
- This procedure applies only to AFF A700 systems. For all other controller models that need upgrading to an AFF A900 system, refer to References to link to the *Use "system controller replace" commands to upgrade controller hardware running ONTAP 9.8 or later* and the *Using Aggregate Relocation to Manually Upgrade Controller Hardware Running ONTAP 9.8 or Later* content.
- The AFF A900 systems only support high-line power (200V to 240V). If your AFF A700 system is running on low-line power (100V to 120V), you must convert the AFF A700 input power before using this procedure.

- If you are upgrading from an AFF A700 system with downtime, you can upgrade controller hardware by moving storage or contact technical support. Refer to References to link to *Upgrade by moving volumes or storage*.

Automate the controller upgrade process

During this controller upgrade, you replace an AFF A700 controller with an AFF A900 controller. This content provides the steps for the automated procedure, which uses automatic disk assignment and network port reachability checks to simplify the controller upgrade experience.

Decide whether to use the aggregate relocation procedure

This content describes how to upgrade storage controllers in an AFF A700 HA pair with new AFF A900 controllers, while keeping all the existing data and disks. This is a complex procedure that should be used only by experienced administrators.

Use this procedure under the following circumstances:

- You have verified with your NetApp sales representative that you have received an AFF A900 controller module and NVRAM module and the parts required for the upgrade.
- You are running ONTAP 9.10.1 or later.
- You do not want to add the new controllers as a new HA pair to the cluster and migrate the data by using volume moves.
- You are experienced in administering ONTAP and are comfortable with the risks of working in diagnostic privilege mode.

Do **NOT** use this procedure under the following circumstances:

- You are using FlexArray Virtualization Software on AFF A700 systems.
- You are using a shared switch for cluster-interconnect and Ethernet attached storage.

For upgrading Fabric MetroCluster or MetroCluster IP configurations, see References to link to the *MetroCluster Upgrade and Expansion* content.

You can use NetApp Storage Encryption (NSE) and NetApp Volume Encryption (NVE) with this procedure.

If you prefer a different method of upgrading the controller hardware and are willing to do volume moves, refer to References to link to *Upgrade by moving volumes or storage*.

Refer to References to link to the *ONTAP 9 Documentation Center* where you can access ONTAP 9 product documentation.

Required tools and documentation

You must have a grounding strap to perform the upgrade, and you need to reference other documents during the upgrade process.

Refer to References to access the list of reference documents and reference sites required for this upgrade.

Guidelines for upgrading from an AFF A700 to an AFF A900 with ARL

Using ARL to upgrade a pair of AFF A700 controllers running ONTAP 9.10.1 or later to an AFF A900 system depends on the system and the configuration of both the original and replacement controllers.

Supported upgrades for ARL

An AFF A700 to an AFF A900 upgrade using ARL and swapping only the controller module and the NVRAM module is the supported combination. If you have received a new AFF A900 system as a complete system, including a new chassis, refer to References to link to the *Use "system controller replace" commands to upgrade controller hardware running ONTAP 9.8 or later* content.

This procedure strictly applies to an AFF A700 to an AFF A900 upgrade running ONTAP 9.10.1 or later. Do not use this procedure to perform an upgrade between any other system combinations.

Controller upgrade using ARL is supported on systems configured with SnapLock Enterprise and SnapLock Compliance volumes.

Two-node switchless clusters

If you are upgrading nodes in a two-node switchless cluster, you can leave the nodes in the switchless cluster while performing the upgrade. You do not need to convert them to a switched cluster.

Troubleshoot

If any problems occur while upgrading the controllers, see the Troubleshoot section at the end of the procedure for more information and possible solutions.

If you do not find a solution to the problem you encountered, contact technical support.

Overview of the ARL upgrade

Before you upgrade the nodes using ARL, you should understand how the procedure works. In this content, the procedure is broken down into several stages.

Upgrade the node pair

To upgrade the node pair, you need to prepare the original nodes and then perform a series of steps on both the original and new nodes. You can then decommission the original nodes.

ARL upgrade sequence overview

During the procedure, you upgrade the original controller hardware with the replacement controller hardware, one controller at a time, taking advantage of the HA pair configuration to relocate the ownership of non-root aggregates. All non-root aggregates must undergo two relocations to reach their final destination, which is the correct upgraded node.

Each aggregate has a home owner and current owner. The home owner is the actual owner of the aggregate, and the current owner is the temporary owner.

The following table describes the high-level tasks you perform during each stage and the state of aggregate

ownership at the end of the stage. Detailed steps are provided later in the procedure:

Stage	Steps
Stage 1: Prepare for upgrade	1. Verify the upgrade hardware 2. Run prechecks to verify that you can perform the operation 3. Correct aggregate ownership if a precheck fails 4. Enter the cluster-base license keys 5. Get an IP address for storage encryption 6. Manage authentication by using a Key Management Operability Protocol (KMIP) server 7. Manage storage encryption by using an onboard key manager (OKM) 8. Quiesce the SnapMirror relationships (optional) Aggregate ownership at the end of Stage 1: • Node1 is the home owner and current owner of the node1 aggregates • Node2 is the home owner and current owner of the node2 aggregates
Stage 2: Relocate resources from node1 and retire AFF A700 node1	1. Relocate non-root aggregates and NAS data LIFs owned by node1 to node2 2. Relocate failed or vetoed aggregates 3. Retire node1 4. Remove the AFF A700 controller module and NVRAM module 5. Install the AFF A900 NVRAM module and controller module on node1 6. Netboot node1 Aggregate ownership at the end of Stage 2: • Node2 is the current owner of node1 aggregates • Node2 is the home owner and current owner of node2 aggregates

Stage	Steps
Stage 3: Boot node1 with the AFF A900 controller module NVRAM module	1. Boot node1 with the AFF A900 controller module and NVRAM module 2. Verify that node1 is successfully installed 3. Restore node1 network configuration 4. Restore key-manager configuration on the upgraded node1 5. Move non-root aggregates and NAS data LIFs owned by node1 from node2 to the upgraded node1 Aggregate ownership at the end of Stage 3: • Upgraded AFF A900 node1 is the home owner and current owner of node1 aggregates • Node2 is the home owner and current owner of node2 aggregates
Stage 4: Relocate resources from node2 and retire node2	1. Relocate non-root aggregates and NAS data LIFs from node2 to node1 2. Retire node2 Aggregate ownership at the end of Stage 4: • Upgraded node1 is the home owner and current owner of aggregates that originally belonged to node1 • Node2 is the home owner of node2 aggregates • Upgraded node1 is the current owner of node2 aggregates
Stage 5: Install the AFF A900 NVRAM module and controller module on node2	1. Install the AFF A900 NVRAM module and controller module on node2 2. Netboot node2 Aggregate ownership at the end of Stage 5: • Node1 is the home owner and current owner of the aggregates that originally belonged to node1. • Upgraded node2 is the home owner and current owner of aggregates that originally belonged to node2.
Stage 6: Boot node2 with the AFF A900 controller module and NVRAM module	1. Boot node2 with the AFF A900 controller module and NVRAM module 2. Verify that node2 is correctly installed 3. Restore node2 network configuration 4. Move non-root aggregates and NAS data LIFs back to node2

Stage	Steps
Stage 7: Complete the upgrade	1. Verify that the new controllers are set up correctly 2. Set up Storage Encryption on the new controller module 3. Set up NetApp Volume Encryption on the new controller module. 4. Decommission the old system. 5. Resume NetApp SnapMirror operations

Stage 1. Prepare for upgrade

Verify the upgrade hardware

Before starting the upgrade, you must verify that you have the correct hardware to upgrade an AFF A700 system to an AFF A900 system. For each HA pair that you are upgrading, you must have two system controller modules and two NVRAM modules. If there are parts missing, contact technical support or your NetApp sales contact for assistance.

Prepare the nodes for upgrade

During Stage 1, you must prepare the nodes for the upgrade and run a series of prechecks. You must also prepare to netboot the new controllers.

Steps

1. Begin the controller replacement process by entering the following command in the advanced privilege mode of the ONTAP command line:

   ```
   set -privilege advanced
   ```

   ```
   system controller replace start -nodes <node_names>
   ```

   You will see output similar to the following:

```
Warning:
1. Current ONTAP version is 9.x

2. Verify that NVMEM or NVRAM batteries of the new nodes are charged,
and charge them if they are not. You need to physically check the new
nodes to see if the NVMEM or NVRAM  batteries are charged. You can check
the battery status either by connecting to a serial console or using
SSH, logging into the Service Processor (SP) or Baseboard Management
Controller (BMC) for your system, and use the system sensors to see if
the battery has a sufficient charge.

Attention: Do not try to clear the NVRAM contents. If there is a need to
clear the contents of NVRAM, contact NetApp technical support.

3. If a controller was previously part of a different cluster, run
wipeconfig before using it as the replacement controller.

Do you want to continue? {y|n}: y
```

2. Select `y`. You will see the following output:

```
Controller replacement operation: Prechecks in progress.
Controller replacement operation has been paused for user intervention.
```

During the prechecks phase, the system runs the following list of checks in the background.

Precheck	Description
Cluster Health Check	Checks all the nodes in the cluster to confirm that they are healthy.
Aggregate Relocation Status Check	Checks whether an aggregate relocation is already in progress. If another aggregate relocation is in progress, the check fails.
Model Name Check	Checks whether the controller models are supported for this procedure. If the models are not supported, the task fails.
Cluster Quorum Check	Checks that the nodes being replaced are in quorum. If the nodes are not in quorum, the task fails.
Image Version Check	Checks that the nodes being replaced run the same version of ONTAP. If the ONTAP image versions are different, the task fails. The new nodes must have the same version of ONTAP 9.x installed on them that is installed on the original nodes. If the new nodes have a different version of ONTAP installed, you need to netboot the new controllers after you install them. For instructions on how to upgrade ONTAP, refer to References to link to *Upgrade ONTAP*.

Precheck	Description
HA Status Check	Checks if both the nodes being replaced are in a high availability (HA) pair configuration. If storage failover is not enabled for the controllers, the task fails.
Aggregate Status Check	If the nodes being replaced own aggregates for which they are not the home owner, the task fails. The nodes should not own any non-local aggregates.
Disk Status Check	If any nodes being replaced have missing or failed disks, the task fails. If any disks are missing, refer to References to link to *Disk and aggregate management with the CLI*, *Logical storage management with the CLI*, and *High Availability management* to configure storage for the HA pair.
Data LIF Status Check	Checks if any of the nodes being replaced have non-local data LIFs. The nodes should not contain any data LIFs for which they are not the home owner. If one of the nodes contains non-local data LIFs, the task fails.
Cluster LIF Status	Checks whether the cluster LIFs are up for both nodes. If the cluster LIFs are down, the task fails.
ASUP Status Check	If AutoSupport notifications are not configured, the task fails. You must enable AutoSupport before beginning the controller replacement procedure.
CPU Utilization Check	Checks if the CPU utilization is more than 50% for any of the nodes being replaced. If the CPU usage is more than 50% for a considerable period of time, the task fails.
Aggregate Reconstruction Check	Checks if reconstruction is occurring on any data aggregates. If aggregate reconstruction is in progress, the task fails.
Node Affinity Job Check	Checks if any node affinity jobs are running. If node affinity jobs are running, the check fails.

3. After the controller replacement operation is started and the prechecks are completed, the operation pauses, enabling you to collect output information that you might need later in the controller upgrade process.
4. Run the below set of commands as directed by the controller replacement procedure on the system console.

   You must run and save the output of the following commands individually:

   - vserver services name-service dns show
   - network interface show -curr-node <nodename> -role cluster,intercluster,node-mgmt,cluster-mgmt,data
   - network port show -node <node_name> -type physical
   - service-processor show -node * -instance
   - network fcp adapter show -node <node_name>
   - network port ifgrp show

- system node show -instance -node <node_name>
- run -node <node_name> sysconfig
- storage aggregate show -node <node_name>
- volume show -node <node_name>
- storage array config show -switch <switch_name>
- system license show -owner <node_name>
- storage encryption disk show
- security key-manager onboard show-backup
- security key-manager external show
- security key-manager external show-status
- reachability show -detail

If NetApp Volume Encryption using Onboard Key Manager is in use, keep the key-manager passphrase ready to complete the key manager resync later in the procedure.

Correct aggregate ownership if an ARL precheck fails

If the Aggregate Status Check fails, you must return aggregates owned by the partner node to the home owner node and initiate the precheck process again.

Steps

1. Return the aggregates currently owned by the partner node to the home owner node:

   ```
   storage aggregate relocation start -node <source_node> -destination
   <destination-node> - aggregate-list *
   ```

2. Verify that neither node1 nor node2 still owns aggregates for which it is the current owner (but not the home owner):

   ```
   storage aggregate show -nodes <node_name> -is-home false -fields owner-
   name,home- name,state
   ```

   The following example shows the output of the command when a node is both the current owner and home owner of aggregates:

   ```
   cluster::> storage aggregate show -nodes node1 -is-home true -fields
   owner-name,home-name,state
   aggregate   home-name  owner-name  state
   ---------   ---------  ----------  ------
   aggr1       node1      node1       online
   aggr2       node1      node1       online
   aggr3       node1      node1       online
   aggr4       node1      node1       online

   4 entries were displayed.
   ```

After you finish

You must restart the controller replacement process:

```
system controller replace start -nodes <node_names>
```

License

When you set up a cluster, the setup wizard prompts you to enter the cluster-base license key. However, some features require additional licenses, which are issued as *packages* that include one or more features. Each node in the cluster must have its own key for each feature to be used in the cluster.

If you do not have new license keys, currently licensed features in the cluster are available to the new controller. However, using unlicensed features on the controller might put you out of compliance with your license agreement, so you should install the new license key or keys for the new controller after the upgrade is complete.

Refer to References to link to the *NetApp Support Site* where you can obtain new 2-character license keys for 9.10.1 or later. The keys are available in the *My Support* section under *Software licenses*. If the site does not have the license keys you need, contact your NetApp sales representative.

For detailed information about licensing, refer to References to link to the *System Administration Reference*.

Get an IP address of an external key management server for Storage Encryption

After upgrading, you must immediately configure Storage Encryption and establish a cluster-wide authentication key to replace the previous node-level authentication keys.

Steps

1. Install the necessary client and server secure sockets layer (SSL) certificates required to communicate with key management servers:

   ```
   security certificate install
   ```

2. Configure Storage Encryption on all nodes by using the following command on each node:

   ```
   security key-manager external enable
   ```

3. Add the IP address for each key management server:

   ```
   security key-manager external add-servers -key-servers
   <key_management_server_ip_address>
   ```

4. Verify that the same key management servers are configured and available on all nodes in the cluster:

   ```
   security key-manager external show-status
   ```

5. Create a new cluster-wide authentication key:

   ```
   security key-manager key create
   ```

6. Make a note of the new authentication key ID.
7. Rekey all self-encrypting drives with the new authentication key:

```
storage encryption disk modify -disk * -data-key-id <authentication_key_id>
```

Manage authentication using KMIP servers

Beginning with ONTAP 9.10.1, you can use Key Management Interoperability Protocol (KMIP) servers to manage authentication keys.

Steps

1. Add a new controller:

   ```
   security key-manager external enable
   ```

2. Add the key manager:

   ```
   security key-manager external add-servers -key-servers
   <key_management_server_ip_address>
   ```

3. Verify that the key management servers are configured and available to all nodes in the cluster:

   ```
   security key-manager external show-status
   ```

4. Restore the authentication keys from all linked key management servers to the new node:

   ```
   security key-manager external restore -node <new_controller_name>
   ```

5. Rekey all self-encrypting disks with the new authentication key:

   ```
   storage encryption disk modify -disk * [-data-key-id nonMSID AK]
   ```

6. If you use the Federal Information Processing Standard (FIPS), rekey all self-encrypting disks with the new authentication key:

   ```
   storage encryption disk modify -disk * [-fips-key-id nonMSID AK]
   ```

Manage storage encryption using Onboard Key Manager

You can use the OKM to manage encryption keys. If you plan to use OKM, you must record the passphrase and backup material before beginning the upgrade.

Steps

1. Save the passphrase to a secure location.
2. Create a backup for recovery purposes. Run the following command and save the output:

   ```
   security key-manager onboard show-backup
   ```

Quiesce the SnapMirror relationships (optional)

Before continuing with the procedure, you must confirm that all the SnapMirror relationships are quiesced. When a SnapMirror relationship is quiesced, it remains quiesced across reboots and failovers.

Steps

1. Verify the SnapMirror relationship status on the destination cluster:

```
snapmirror show
```

> If the status is "Transferring", you must abort those transfers:
> `snapmirror abort -destination-vserver <vserver_name>`

The abort fails if the SnapMirror relationship is not in the "Transferring" state.

2. Quiesce all relationships between the cluster:

```
snapmirror quiesce -destination-vserver <vserver_name>
```

Stage 2. Relocate resources and retire AFF A700 node1

Relocate non-root aggregates and NAS data LIFs owned by node1 to node2

Before you can replace node1 with the AFF A900 controller module and the NVRAM module, you must move the non-root aggregates and NAS data LIFs from node1 to node2 before eventually restoring node1's resources back on node1 running on the AFF A900 system. This process is largely automated; the operation pauses to enable you to check its status.

Before you begin

The operation should already be paused when you begin the task; you must manually resume the operation.

About this task

Remote LIFs handle traffic to SAN LUNs during the upgrade procedure. You are not required to move SAN LIFs for cluster or service health during the upgrade. You must verify that the LIFs are healthy and located on appropriate ports after you bring node1 online as AFF A900.

> The home owner for the aggregates and LIFs is not modified; only the current owner is modified.

Steps

1. Resume the aggregate relocation and NAS data LIF move operations:

```
system controller replace resume
```

All the non-root aggregates and NAS data LIFs are migrated from node1 to node2.

The operation pauses to enable you to verify whether all node1 non-root aggregates and non-SAN data LIFs have been migrated to node2.

2. Check the status of the aggregate relocation and NAS data LIF move operations:

```
system controller replace show-details
```

3. With the operation still paused, verify that all the non-root aggregates are online for their state on node2:

```
storage aggregate show -node <node2> -state online -root false
```

The following example shows that the non-root aggregates on node2 are online:

```
cluster::> storage aggregate show -node node2 state online -root false

Aggregate  Size     Available  Used%  State  #Vols  Nodes  RAID Status
---------  -------  ---------  -----  ------ -----  ------
--------------
aggr_1     744.9GB  744.8GB    0%     online     5  node2
raid_dp,normal
aggr_2     825.0GB  825.0GB    0%     online     1  node2
raid_dp,normal
2 entries were displayed.
```

If the aggregates have gone offline or become foreign on node2, bring them online by using the following command on node2, once for each aggregate:

`storage aggregate online -aggregate <aggr_name>`

4. Verify that all the volumes are online on node2 by using the following command on node2 and examining its output:

   `volume show -node <node2> -state offline`

   If any volumes are offline on node2, bring them online by using the following command on node2, once for each volume:

   `volume online -vserver <vserver_name> -volume <volume_name>`

   The `<vserver_name>` to use with this command is found in the output of the previous `volume show` command.

5. If any LIFs are down, set the administrative status of the LIFs to `up` by using the following command, once for each LIF:

   `network interface modify -vserver <vserver_name> -lif <LIF_name> -home-node <nodename> - status-admin up`

Relocate failed or vetoed aggregates

If any aggregates fail to relocate or are vetoed, you must manually relocate the aggregates, or if necessary, override either the vetoes or destination checks.

About this task

The relocation operation will have paused due to the error.

Steps

1. Check the event management system (EMS) logs to determine why the aggregate failed to relocate or was vetoed.
2. Relocate any failed or vetoed aggregates:

```
storage aggregate relocation start -node <node1> -destination <node2>
aggregate-list <aggr_name> -ndo-controller-upgrade true
```

3. When prompted, enter `y`.
4. You can force relocation by using one of the following methods:

Option	Description
Overriding veto checks	Use the following command: `storage aggregate relocation start -node node1 -destination node2 -aggregate-list <aggr_list> -ndo -controller-upgrade true -override-vetoes true`
Overriding destination checks	Use the following command: `storage aggregate relocation start -node node1 -destination node2 -aggregate-list <aggr_list> -ndo -controller-upgrade true -override-vetoes true -override-destination-checks true`

Retire node1

To retire node1, resume the automated operation to disable the HA pair with node2 and shut down node1 correctly. You must later remove the AFF A700 controller module and the NVRAM module from the node1 chassis and then install the AFF A900 NVRAM module and controller module on node1.

Steps

1. Resume the operation:

   ```
   system controller replace resume
   ```

2. Verify that node1 has been halted:

   ```
   system controller replace show-details
   ```

   After node1 has completely halted, node1 should be at the LOADER> prompt. To see the LOADER> prompt, connect to the serial console of node1.

Remove the AFF A700 controller module and NVRAM module

At this stage, node1 is down and all data is served by node2. Because node1 and node2 are in the same chassis and powered by the same set of power supplies, do NOT power off the chassis. You must take care to remove only the node1 controller module and the node1 NVRAM module. Typically, node1 is controller A, located on the left side of the chassis when looking at the controllers from the rear of the system. The controller label is located on the chassis directly above the controller module.

Before you begin

If you are not already grounded, correctly ground yourself.

Remove the AFF A700 controller module

Use the following procedure to remove the AFF A700 controller module.

Steps

1. Detach the console cable, if any, and the management cable from the node1 controller module before removing the controller module from node1.

> When you are working on node1, you only remove the console and e0M cables from node1. You must not remove or change any other cables or connections on either node1 or node2 during this process.

2. Unlock and remove the controller module A from the chassis.
   a. Slide the orange button on the cam handle downward until it unlocks.

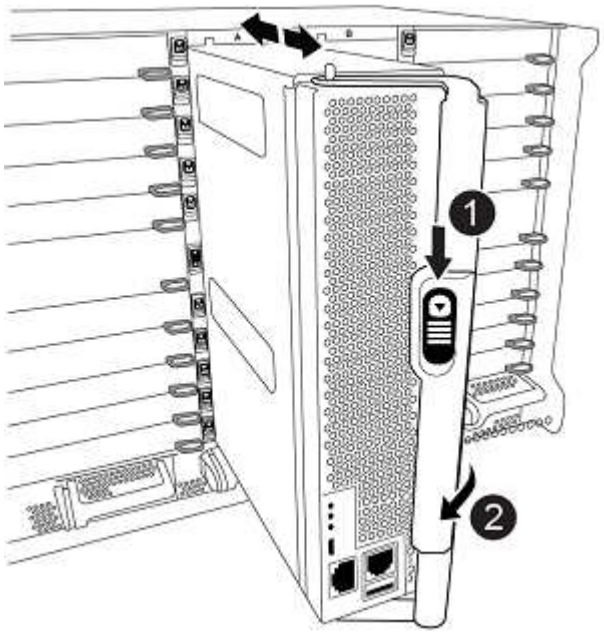

1	Cam handle release button
2	Cam handle

   b. Rotate the cam handle so that it completely disengages the controller module from the chassis, and then slide the controller module out of the chassis.

      Make sure that you support the bottom of the controller module as you slide it out of the chassis.

Remove the AFF A700 NVRAM module

Use the following procedure to remove the AFF A700 NVRAM module.

> The AFF A700 NVRAM module is in slot 6 and is double the height of the other modules in the system.

Steps

1. Unlock and remove the NVRAM module from slot 6 of node1.

a. Depress the lettered and numbered cam button.

   The cam button moves away from the chassis.

b. Rotate the cam latch down until it is in a horizontal position.

   The NVRAM module disengages from the chassis and moves a few inches.

c. Remove the NVRAM module from the chassis by pulling on the pull tabs on the sides of the module face.

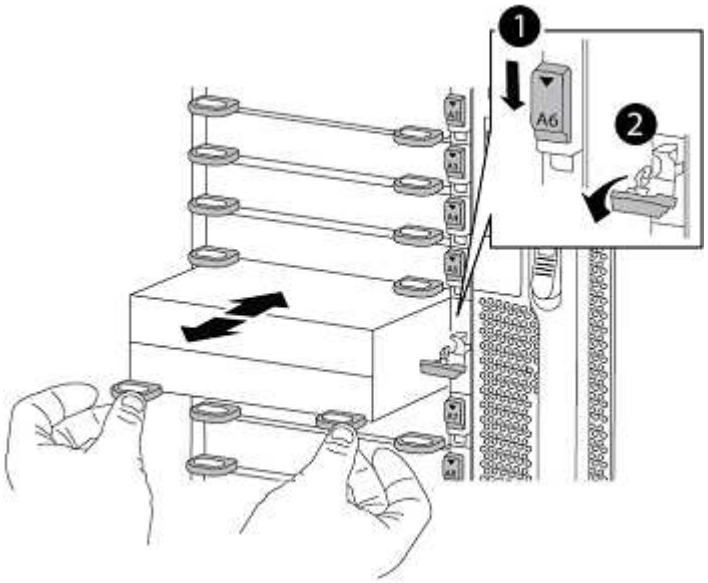

1	Lettered and numbered I/O cam latch
2	I/O latch completely unlocked

2. If you are using any add-on modules as coredump devices on the AFF A700 NVRAM module, do NOT transfer them to the AFF A900 NVRAM module.

Install the AFF A900 NVRAM module and controller module on node1

You must install the AFF A900 NVRAM module and controller module that you received for the upgrade on node1. Do NOT move the coredump devices from the AFF A700 NVRAM module to the AFF A900 NVRAM module.

Before you begin

If you are not already grounded, correctly ground yourself.

Install the AFF A900 NVRAM module

Use the following procedure to install the AFF A900 NVRAM module in slot 6 of node1.

Steps

1. Align the NVRAM module with the edges of the chassis opening in slot 6.

2. Gently slide the NVRAM module into the slot until the lettered and numbered I/O cam latch begins to engage with the I/O cam pin, and then push the I/O cam latch all the way up to lock the NVRAM module in place.

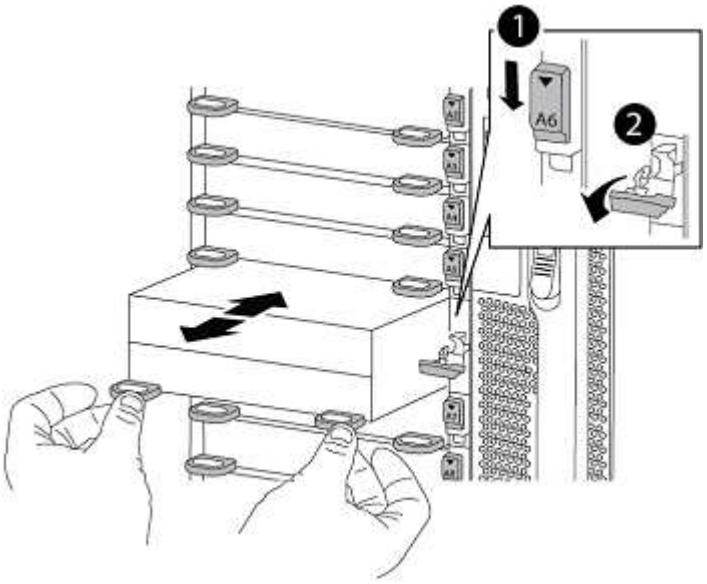

1	Lettered and numbered I/O cam latch
2	I/O latch completely unlocked

Install the AFF A900 controller module on node1.

Use the following procedure to install the AFF A900 controller module in node1.

Steps

1. Align the end of the controller module with opening A in the chassis, and then gently push the controller module halfway into the system.

   Do not completely insert the controller module in the chassis until instructed to do so later in the procedure.

2. Cable the management and console ports to the node1 controller module.

   Because the chassis is already powered ON, node1 starts BIOS initialization followed by autoboot as soon as it is fully seated. To interrupt the node1 boot, before completely inserting the controller module into the slot, it is recommended that you connect the serial console and management cables to the node1 controller module.

3. Firmly push the controller module into the chassis until it meets the midplane and is fully seated.

   The locking latch rises when the controller module is fully seated.

To avoid damaging the connectors, do not use excessive force when sliding the controller module into the chassis.

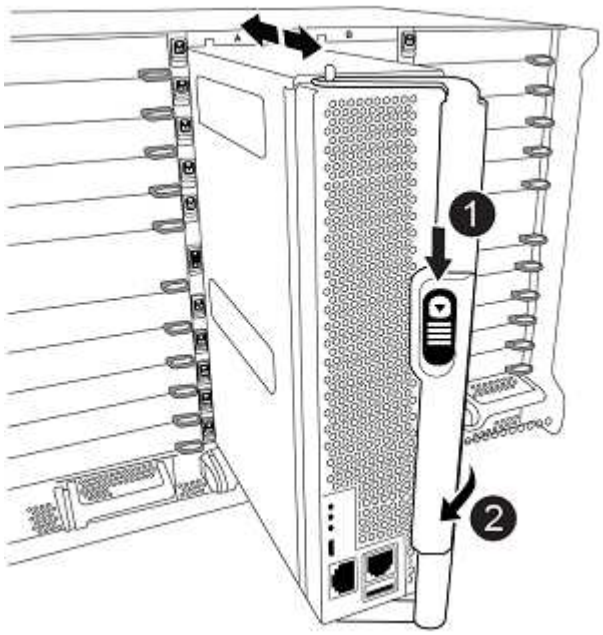

1	Cam handle locking latch
2	Cam handle in the unlocked position

4. Connect the serial console as soon as the module is seated and be ready to interrupt AUTOBOOT of node1.
5. After you interrupt AUTOBOOT, node1 stops at the LOADER prompt. If you do not interrupt AUTOBOOT on time and node1 starts booting, wait for the prompt and press **Ctrl-C** to go into the boot menu. After the node stops at the boot menu, use option `8` to reboot the node and interrupt the AUTOBOOT during reboot.
6. At the LOADER> prompt of node1, set the default environment variables:

   ```
   set-defaults
   ```

7. Save the default environment variables settings:

   ```
   saveenv
   ```

Netboot node1

After swapping the corresponding AFF A900 node1 controller module and NVRAM module, you must netboot node1. The term netboot means that you are booting from an ONTAP image stored on a remote server. When preparing for netboot, you must add a copy of the ONTAP 9 boot image onto a web server that the system can access.

It is not possible to check the version of ONTAP installed on the boot media of an AFF A900 controller module

unless it is installed in a chassis and powered ON. The ONTAP version on the AFF A900 boot media must be same as the ONTAP version running on the AFF A700 system that is being upgraded and both the primary and backup boot images must match. You can configure the images by performing a netboot followed by the `wipeconfig` command from the boot menu. If the controller module was previously used in another cluster, the `wipeconfig` command clears any residual configuration on the boot media.

> You can also use the USB boot option to perform the netboot. See the NetApp KB Article: How to use the boot_recovery LOADER command for installing ONTAP for initial setup of a system.

Before you begin

- Verify that you can access a HTTP server with the system.
- Download the necessary system files for your system and the correct version of ONTAP from the *NetApp Support Site*. Refer to References to link to the *NetApp Support Site*.

About this task

You must netboot the new controllers if they do not have the same version of ONTAP 9 installed on them that is installed on the original controllers. After you install each new controller, you boot the system from the ONTAP 9 image stored on the web server. You can then download the correct files to the boot media device for subsequent system boots.

Steps

1. Refer to References to link to the *NetApp Support Site* to download the files used for performing the netboot of the system.
2. Download the appropriate ONTAP software from the software download section of the *NetApp Support Site* and store the `<ontap_version>_image.tgz` file on a web-accessible directory.
3. Change to the web-accessible directory and verify that the files you need are available.
4. Your directory listing should contain `<ontap_version>_image.tgz`.
5. Configure the netboot connection by choosing one of the following actions.

> You must use the management port and IP as the netboot connection. Do not use a data LIF IP or a data outage might occur while the upgrade is being performed.

If Dynamic Host Configuration Protocol (DHCP) is…	Then…
Running	Configure the connection automatically by using the following command at the boot environment prompt: `ifconfig e0M -auto`

If Dynamic Host Configuration Protocol (DHCP) is…	Then…
Not running	Manually configure the connection by using the following command at the boot environment prompt: `ifconfig e0M -addr=<filer_addr> -mask=<netmask> -gw=<gateway> - dns=<dns_addr> domain=<dns_domain>` `<filer_addr>` is the IP address of the storage system. `<netmask>` is the network mask of the storage system. `<gateway>` is the gateway for the storage system. `<dns_addr>` is the IP address of a name server on your network. This parameter is optional. `<dns_domain>` is the Domain Name Service (DNS) domain name. This parameter is optional. Other parameters might be necessary for your interface. Enter `help ifconfig` at the firmware prompt for details.

6. Perform netboot on node1:

   `netboot http://<web_server_ip/path_to_web_accessible_directory>/netboot/kernel`

   Do not interrupt the boot.

7. Wait for the node1 now running on the AFF A900 controller module to boot and display the boot menu options as shown below:

```
Please choose one of the following:

(1)  Normal Boot.
(2)  Boot without /etc/rc.
(3)  Change password.
(4)  Clean configuration and initialize all disks.
(5)  Maintenance mode boot.
(6)  Update flash from backup config.
(7)  Install new software first.
(8)  Reboot node.
(9)  Configure Advanced Drive Partitioning.
(10) Set Onboard Key Manager recovery secrets.
(11) Configure node for external key management.
Selection (1-11)?
```

8. From the boot menu, select option `(7) Install new software first`.

   This menu option downloads and installs the new ONTAP image to the boot device.

Disregard the following message: `This procedure is not supported for Non-Disruptive Upgrade on an HA pair`. This note applies to nondisruptive ONTAP software upgrades, and not controller upgrades.

Always use netboot to update the new node to the desired image. If you use another method to install the image on the new controller, the wrong image might install. This issue applies to all ONTAP releases.

9. If you are prompted to continue the procedure, enter `y`, and when prompted for the package, enter the URL:
   `http://<web_server_ip/path_to_web-accessible_directory>/<ontap_version>_image.tgz`

   The `<path_to_the_web-accessible_directory>` should lead to where you downloaded the `<ontap_version>_image.tgz` in Step 2.

10. Complete the following substeps to reboot the controller module:
    a. Enter `n` to skip the backup recovery when you see the following prompt:

    ```
    Do you want to restore the backup configuration now? {y|n}
    ```

    b. Enter `y` to reboot when you see the following prompt:

    ```
    The node must be rebooted to start using the newly installed
    software. Do you want to reboot now? {y|n}
    ```

    The controller module reboots but stops at the boot menu because the boot device was reformatted, and the configuration data must be restored.

11. At the prompt, run the `wipeconfig` command to clear any previous configuration on the boot media:
    a. When you see the message below, answer `yes`:

    ```
    This will delete critical system configuration, including cluster
    membership.
    Warning: do not run this option on a HA node that has been taken
    over.
    Are you sure you want to continue?:
    ```

    b. The node reboots to finish the `wipeconfig` and then stops at the boot menu.

12. Select option `5` to go to maintenance mode from the boot menu. Answer `yes` to the prompts until the node stops at maintenance mode and the command prompt `*>`.

13. Verify that the controller and chassis are configured as `ha`:

    ```
    ha-config show
    ```

The following example shows the output of the `ha-config show` command:

```
Chassis HA configuration: ha
Controller HA configuration: ha
```

14. If the controller and chassis are not configured as `ha`, use the following commands to correct the configuration:

    `ha-config modify controller ha`

    `ha-config modify chassis ha`

15. Verify the `ha-config` settings:

    `ha-config show`

    ```
    Chassis HA configuration: ha
    Controller HA configuration: ha
    ```

16. Halt node1:

    `halt`

    Node1 should stop at the LOADER prompt.

17. On node2, check the system date, time, and time zone:

    `date`

18. On node1, check the date by using the following command at the boot environment prompt:

    `show date`

19. If necessary, set the date on node1:

    `set date <mm/dd/yyyy>`

    Set the corresponding UTC date on node1.

20. On node1, check the time by using the following command at the boot environment prompt:

    `show time`

21. If necessary, set the time on node1:

    `set time <hh:mm:ss>`

    Set the corresponding UTC time on node1.

22. Set the partner system ID on node1:

    `setenv partner-sysid <node2_sysid>`

    You can obtain the node2 system ID from the `node show -node <node2>` command output on node2.

    a. Save the settings:

       `saveenv`

23. On node1, at the LOADER prompt, verify the `partner-sysid` for node1:

    `printenv partner-sysid`

    For node1, the `partner-sysid` must be that of node2.

Stage 3. Boot node1 with the AFF A900 controller module and NVRAM module

Boot node1 with the AFF A900 controller module and NVRAM module

Node1 with the AFF A900 controller module and NVRAM module is now ready for boot up. Upgrading from an AFF A700 to an AFF A900 by swapping the controller module and NVRAM module involves moving only the console and management connections. This section provides the steps required to boot node1 with the AFF A900 controller module and NVRAM module.

Steps

1. If NetApp Storage Encryption (NSE) is in use on this configuration, the `setenv bootarg.storageencryption.support` command must be set to `true`, and the `kmip.init.maxwait` variable must be set to `off` to avoid a boot loop after the node1 configuration is loaded:

   ```
   setenv bootarg.storageencryption.support true

   setenv kmip.init.maxwait off
   ```

2. Boot the node into `boot_menu`:

   ```
   boot_ontap menu
   ```

3. The node stops at the boot menu. Enter "22/7" and select the hidden option `boot_after_controller_replacement`. To reassign the AFF A700 node1 disks to AFF A900 node1, at the prompt, enter the actual node name of node1. Use the following example as a reference:

   ```
   LOADER-A> boot_ontap menu
   .
   .
   <output truncated>
   .
   ```

```
All rights reserved.
*******************************
*                             *
* Press Ctrl-C for Boot Menu. *
*                             *
*******************************
.
<output truncated>
.
Please choose one of the following:

(1)  Normal Boot.
(2)  Boot without /etc/rc.
(3)  Change password.
(4)  Clean configuration and initialize all disks.
(5)  Maintenance mode boot.
(6)  Update flash from backup config.
(7)  Install new software first.
(8)  Reboot node.
(9)  Configure Advanced Drive Partitioning.
(10) Set Onboard Key Manager recovery secrets.
(11) Configure node for external key management.
Selection (1-11)? 22/7

(22/7)                          Print this secret List
(25/6)                          Force boot with multiple filesystem
disks missing.
(25/7)                          Boot w/ disk labels forced to clean.
(29/7)                          Bypass media errors.
(44/4a)                         Zero disks if needed and create new
flexible root volume.
(44/7)                          Assign all disks, Initialize all disks
as SPARE, write DDR labels
.
.
<output truncated>
.
.
(wipeconfig)                        Clean all configuration on boot
device
(boot_after_controller_replacement) Boot after controller upgrade
(boot_after_mcc_transition)         Boot after MCC transition
(9a)                                Unpartition all disks and remove
their ownership information.
(9b)                                Clean configuration and initialize
node with partitioned disks.
```

```
(9c)                                Clean configuration and initialize
node with whole disks.
(9d)                                Reboot the node.
(9e)                                Return to main boot menu.



The boot device has changed. System configuration information could be
lost. Use option (6) to restore the system configuration, or option (4)
to initialize all disks and setup a new system.
Normal Boot is prohibited.

Please choose one of the following:

(1)  Normal Boot.
(2)  Boot without /etc/rc.
(3)  Change password.
(4)  Clean configuration and initialize all disks.
(5)  Maintenance mode boot.
(6)  Update flash from backup config.
(7)  Install new software first.
(8)  Reboot node.
(9)  Configure Advanced Drive Partitioning.
(10) Set Onboard Key Manager recovery secrets.
(11) Configure node for external key management.
Selection (1-11)? boot_after_controller_replacement

This will replace all flash-based configuration with the last backup to
disks. Are you sure you want to continue?: yes

.
.
<output truncated>
.
.
Controller Replacement: Provide name of the node you would like to
replace:<nodename of the node being replaced>
Changing sysid of node node1 disks.
Fetched sanown old_owner_sysid = 536940063 and calculated old sys id =
536940063
Partner sysid = 4294967295, owner sysid = 536940063
.
.
<output truncated>
.
.
```

```
varfs_backup_restore: restore using /mroot/etc/varfs.tgz
varfs_backup_restore: attempting to restore /var/kmip to the boot device
varfs_backup_restore: failed to restore /var/kmip to the boot device
varfs_backup_restore: attempting to restore env file to the boot device
varfs_backup_restore: successfully restored env file to the boot device
wrote key file "/tmp/rndc.key"
varfs_backup_restore: timeout waiting for login
varfs_backup_restore: Rebooting to load the new varfs
Terminated
<node reboots>

System rebooting...

.
.
Restoring env file from boot media...
copy_env_file:scenario = head upgrade
Successfully restored env file from boot media...
Rebooting to load the restored env file...
.
System rebooting...
.
.
.
<output truncated>
.
.
.
.
WARNING: System ID mismatch. This usually occurs when replacing a boot
device or NVRAM cards!
Override system ID? {y|n} y
.
.
.
.
Login:
```

In the preceding console output example, ONTAP will prompt you for the partner node name if the system uses Advanced Disk Partitioning (ADP) disks.

The system IDs shown in the preceding example are example IDs. The actual system IDs of the nodes that you are upgrading will be different.

Between entering node names at the prompt and the login prompt, the node reboots a few times to restore the environment variables, update firmware on the cards in the system, and for other ONTAP updates.

Verify the node1 installation

You must verify the node1 installation with the AFF A900 controller module and NVRAM module. Because there is no change to physical ports, you are not required to map the physical ports from the AFF A700 node1 to the AFF A900 node1.

About this task

After you boot node1 with the AFF A900 controller module, you must verify that it is installed correctly. You must wait for node1 to join quorum and then resume the controller replacement operation.

At this point in the procedure, the controller upgrade operation should have paused as node1 attempts to join quorum automatically.

Steps

1. Verify that node1 has joined quorum:

   ```
   cluster show -node node1 -fields health
   ```

   The output of the `health` field should be `true`.

2. Verify that node1 is part of the same cluster as node2 and that it is healthy:

   ```
   cluster show
   ```

3. Switch to advanced privilege mode:

   ```
   set advanced
   ```

4. Check the status of the controller replacement operation and verify that it is in a paused state and in the same state that it was in before node1 was halted to perform the physical tasks of installing new controllers and moving cables:

   ```
   system controller replace show
   ```

   ```
   system controller replace show-details
   ```

5. Resume the controller replacement operation:

   ```
   system controller replace resume
   ```

6. The controller replacement operation pauses for intervention with the following message:

```
Cluster::*> system controller replace show
Node          Status                        Error-Action
------------  ------------------------
-----------------------------------
Node1         Paused-for-intervention       Follow the instructions given
in
                                            Step Details
Node2         None

Step Details:
-----------------------------------------
To complete the Network Reachability task, the ONTAP network
configuration must be manually adjusted to match the new physical
network configuration of the hardware. This includes:


1. Re-create the interface group, if needed, before restoring VLANs. For
detailed commands and instructions, refer to the "Re-creating VLANs,
ifgrps, and broadcast domains" section of the upgrade controller
hardware guide for the ONTAP version running on the new controllers.
2. Run the command "cluster controller-replacement network displaced-
vlans show" to check if any VLAN is displaced.
3. If any VLAN is displaced, run the command "cluster controller-
replacement network displaced-vlans restore" to restore the VLAN on the
desired port.
2 entries were displayed.
```

In this procedure, section *Re-creating VLANs, ifgrps, and broadcast domains* has been renamed *Restore network configuration on node1*.

7. With the controller replacement in a paused state, proceed to Restore network configuration on node1.

Restore network configuration on node1

After you confirm that node1 is in quorum and can communicate with node2, verify that node1's VLANs, interface groups, and broadcast domains are seen on node1. Also, verify that all node1 network ports are configured in their correct broadcast domains.

About this task

For more information on creating and re-creating VLANs, interface groups, and broadcast domains, refer to References to link to the *Network Management* content.

Steps

1. List all the physical ports that are on upgraded node1:

```
network port show -node node1
```

All physical network ports, VLAN ports, and interface group ports on the node are displayed. From this output, you can see any physical ports that have been moved into the `Cluster` broadcast domain by ONTAP. You can use this output to aid in deciding which ports should be used as interface group member ports, VLAN base ports, or standalone physical ports for hosting LIFs.

2. List the broadcast domains on the cluster:

   ```
   broadcast-domain show
   ```

3. List the network port reachability of all ports on node1:

   ```
   network port reachability show -node node1
   ```

   You should see output like the following example:

   ```
   Cluster::> reachability show -node node1
     (network port reachability show)
   Node      Port     Expected Reachability               Reachability
   Status
   --------- -------- ----------------------------------
   ---------------------
   Node1
             a0a      Default:Default                    ok
             a0a-822  Default:822                        ok
             a0a-823  Default:823                        ok
             e0M      Default:Mgmt                       ok
             e11a     -                                  no-reachability
             e11b     -                                  no-reachability
             e11c     -                                  no-reachability
             e11d     -                                  no-reachability
             e3a      -                                  no-reachability
             e3b      -                                  no-reachability
             e4a      Cluster:Cluster                    ok
             e4e      Cluster:Cluster                    ok
             e5a      -                                  no-reachability
             e7a      -                                  no-reachability
             e9a      Default:Default                    ok
             e9a-822  Default:822                        ok
             e9a-823  Default:823                        ok
             e9b      Default:Default                    ok
             e9b-822  Default:822                        ok
             e9b-823  Default:823                        ok
             e9c      Default:Default                    ok
             e9d      Default:Default                    ok
   22 entries were displayed.
   ```

   In the preceding example, node1 booted after the controller replacement. Some ports do not have reachability because there is no physical connectivity. You must repair any ports with a reachability status

other than `ok`.

> During an AFF A700 to an AFF A900 controller upgrade, the network ports and their connectivity should not change. All ports should reside in the correct broadcast domains and the network port reachability should not change. However, before moving LIFs from node2 back to node1, you must verify the reachability and health status of the network ports.

4. Repair the reachability for each of the ports on node1 with a reachability status other than `ok` by using the following command, in the following order:

   `network port reachability repair -node <node_name> -port <port_name>`

   a. Physical ports
   b. VLAN ports

   You should see output like the following example:

   ```
   Cluster ::> reachability repair -node node1 -port e11b
   ```

   ```
   Warning: Repairing port "node1:e11b" may cause it to move into a
   different broadcast domain, which can cause LIFs to be re-homed away
   from the port. Are you sure you want to continue? {y|n}:
   ```

   A warning message, as shown in the preceding example, is expected for ports with a reachability status that might be different from the reachability status of the broadcast domain where it is currently located. Review the connectivity of the port and answer `y` or `n` as appropriate.

   Verify that all physical ports have their expected reachability:

   `network port reachability show`

   As the reachability repair is performed, ONTAP attempts to place the ports in the correct broadcast domains. However, if a port's reachability cannot be determined and does not belong to any of the existing broadcast domains, ONTAP will create new broadcast domains for these ports.

5. Verify port reachability:

   `network port reachability show`

   When all ports are correctly configured and added to the correct broadcast domains, the `network port reachability show` command should report the reachability status as `ok` for all connected ports, and the status as `no-reachability` for ports with no physical connectivity. If any port reports a status other than these two, perform the reachability repair and add or remove ports from their broadcast domains as instructed in Step 4.

6. Verify that all ports have been placed into broadcast domains:

   `network port show`

7. Verify that all ports in the broadcast domains have the correct maximum transmission unit (MTU) configured:

   ```
   network port broadcast-domain show
   ```

8. Restore LIF home ports, specifying the Vserver and LIF home ports, if any, that need to be restored by using the following steps:
   a. List any LIFs that are displaced:

      ```
      displaced-interface show
      ```

   b. Restore LIF home nodes and home ports:

      ```
      displaced-interface restore-home-node -node <node_name> -vserver
      <vserver_name> -lif-name <LIF_name>
      ```

9. Verify that all LIFs have a home port and are administratively up:

   ```
   network interface show -fields home-port,status-admin
   ```

Restore key-manager configuration on the upgraded node1

If you are using NetApp Volume Encryption (NVE) to encrypt volumes on the system you are upgrading, the encryption configuration must be synchronized to the new nodes. Encrypted volumes are taken offline when ARL is complete for node1 aggregates from node2 to node1.

About this task

Synchronize the encryption configuration to the new nodes by performing the following steps:

Steps

1. Synchronize the encryption configuration for Onboard Key Manager (OKM) by using the following command at the cluster prompt:

   ```
   security key-manager onboard sync
   ```

2. Enter the cluster-wide passphrase for the OKM.

Move non-root aggregates and NAS data LIFs owned by node1 from node2 to the upgraded node1

After you verify network configuration on node1 and before you relocate aggregates from node2 to node1, you must verify that the NAS data LIFs belonging to node1 that are currently on node2 are relocated from node2 to node1. You must also verify that the SAN LIFs exist on node1.

About this task

Remote LIFs handle traffic to SAN LUNs during the upgrade procedure. Moving SAN LIFs is not necessary for cluster or service health during the upgrade. SAN LIFs are not moved unless they need to be mapped to new ports. After you bring node1 online, you must verify that the LIFs are healthy and located on the appropriate ports.

Steps

1. Resume the relocation operation:

   `system controller replace resume`

   The system performs the following tasks:

   - Cluster quorum check
   - System ID check
   - Image version check
   - Target platform check
   - Network reachability check

   The operation pauses at this stage in the network reachability check.

2. Perform a network reachability check:

   `network port reachability -show-detail -node node1`

   Confirm that all connected ports, including the interface group and VLAN ports, show their status as `OK`.

3. Resume the relocation operation:

   `system controller replace resume`

   The system performs the following checks:

   - Cluster health check
   - Cluster LIF status check

   After performing these checks, the system relocates the non-root aggregates and NAS data LIFs owned by node1 to the new node1.

   The controller replacement operation pauses after the resource relocation is complete.

4. Check the status of the aggregate relocation and NAS data LIF move operations:

   `system controller replace show-details`

   If the controller replacement procedure is paused, check and correct the error, if any, and then issue `resume` to continue the operation.

5. If necessary, restore and revert any displaced LIFs. List any displaced LIFs:

   `cluster controller-replacement network displaced-interface show`

   If any LIFs are displaced, restore the home node back to node1:

   `cluster controller-replacement network displaced-interface restore-home-node`

6. Resume the operation to prompt the system to perform the required post-checks:

```
system controller replace resume
```

The system performs the following post-checks:

- Cluster quorum check
- Cluster health check
- Aggregates reconstruction check
- Aggregate status check
- Disk status check
- Cluster LIF status check
- Volume check

Stage 4. Relocate resources from node2 and retire node2

Relocate non-root aggregates and NAS data LIFs from node2 to node1

Before you can replace node2 with the AFF A900 controller module and the NVRAM module, you must first relocate the non-root aggregates that are owned by node2 to node1.

Before you begin

After the post-checks from the previous stage complete, the resource release for node2 starts automatically. The non-root aggregates and non-SAN data LIFs are migrated from node2 to the new node1.

About this task

After the aggregates and LIFs are migrated, the operation is paused for verification purposes. At this stage, you must verify that all the non-root aggregates and non-SAN data LIFs are migrated to the new node1.

The home owner for the aggregates and LIFs are not modified; only the current owner is modified.

Steps

1. Verify that all the non-root aggregates are online and their state on node1:

   ```
   storage aggregate show -node node1 -state online -root false
   ```

   The following example shows that the non-root aggregates on node1 are online:

```
cluster::> storage aggregate show -node node1 state online -root false

Aggregate     Size        Available   Used%   State  #Vols   Nodes
RAID     Status
----------    ---------   ---------   ------  -----   -----  ------
-------  ------
aggr_1        744.9GB      744.8GB   0%  online   5  node1    raid_dp
normal
aggr_2        825.0GB       825.0GB  0%  online   1  node1    raid_dp
normal
2 entries were displayed.
```

If the aggregates have gone offline or become foreign on node1, bring them online by using the following command on the new node1, once for each aggregate:

`storage aggregate online -aggregate <aggr_name>`

2. Verify that all the volumes are online on node1 by using the following command on node1 and examining its output:

   `volume show -node node1 -state offline`

   If any volumes are offline on node1, bring them online by using the following command on node1, once for each volume:

   `volume online -vserver <vserver-name> -volume <volume-name>`

   The `<vserver-name>` to use with this command is found in the output of the previous `volume show` command.

3. Verify that the LIFs have been moved to the correct ports and have a status of `up`. If any LIFs are down, set the administrative status of the LIFs to up by entering the following command, once for each LIF:

   `network interface modify -vserver <vserver_name> -lif <LIF_name> -home-node <nodename> - status-admin up`

4. Verify that there are no data LIFs remaining on node2 by using the following command and examining the output:

   `network interface show -curr-node <node2> -role data`

Retire node2

To retire node2, you must shut node2 down correctly and remove it from the rack or chassis.

Steps

1. Resume the operation:

```
system controller replace resume
```

The node halts automatically.

After you finish

You can decommission node2 after the upgrade is completed. See Decommission the old system.

Stage 5. Install the AFF A900 NVRAM module and controller module on node2

Install AFF A900 NVRAM module and controller module on node2

You must install the AFF A900 NVRAM module and controller module that you received for the upgrade on node2. Node2 is controller B located on the right side of the chassis when looking at the controllers from the rear of the system.

Before you begin

If you are not already grounded, correctly ground yourself.

Install the AFF A900 NVRAM module

Use the following procedure to install the AFF A900 NVRAM module in slot 6 of node2.

Steps

1. Align the NVRAM module with the edges of the chassis opening in slot 6.
2. Gently slide the NVRAM module into the slot until the lettered and numbered I/O cam latch begins to engage with the I/O cam pin, and then push the I/O cam latch all the way up to lock the NVRAM module in place.

Install the AFF A900 controller module in node2.

Use the following procedure to install the AFF A900 controller module in node2.

Steps

1. Align the end of the controller module with bay B in the chassis, and then gently push the controller module halfway into the system.

   The bay label is located on the chassis directly above the controller module.

   Do not completely insert the controller module in the chassis until you are instructed to do so later in the procedure.

2. Cable the management and console ports to the node2 controller module.

   Because the chassis is already powered ON, node2 starts booting as soon as it is fully seated. To avoid node2 booting, it is recommended that you connect the console and management cables to the node2 controller module before completely inserting the controller module into the slot.

3. Firmly push the controller module into the chassis until it meets the midplane and is fully seated.

   The locking latch rises when the controller module is fully seated.

To avoid damaging the connectors, do not use excessive force when sliding the controller module into the chassis.

4. Connect the serial console as soon as the module is seated and be ready to interrupt AUTOBOOT of node1.
5. After you interrupt AUTOBOOT, node2 stops at the LOADER prompt. If you do not interrupt AUTOBOOT on time and node2 starts booting, wait for the prompt and press **Ctrl-C** to go into the boot menu. After the node stops at the boot menu, use option `8` to reboot the node and interrupt the AUTOBOOT during reboot.

Netboot node2

After swapping the corresponding AFF A900 node2 controller module and NVRAM, module you might need to netboot them. The term netboot means that you are booting from an ONTAP image stored on a remote server. When preparing for netboot, you must put a copy of the ONTAP 9 boot image onto a web server that the system can access.

It is not possible to check the version of ONTAP installed on the boot media of an AFF A900 controller module unless it is installed in a chassis and powered ON. The ONTAP version on the AFF A900 boot media must be same as the ONTAP version running on the AFF A700 system that is being upgraded and both the primary and backup boot images must match. You can configure the images by performing a netboot followed by the `wipeconfig` command from the boot menu. If the controller module was previously used in another cluster, the `wipeconfig` command clears any residual configuration on the boot media.

You can also use the USB boot option to perform the netboot. See the NetApp KB Article: How to use the boot_recovery LOADER command for installing ONTAP for initial setup of a system.

Before you begin

- Verify that you can access a HTTP server with the system.
- Download the necessary system files for your system and the correct version of ONTAP from the *NetApp Support Site*. Refer to References to link to the *NetApp Support Site*.

About this task

You must netboot the new controllers if they do not have the same version of ONTAP 9 installed on them that is installed on the original controllers. After you install each new controller, you boot the system from the ONTAP 9 image stored on the web server. You can then download the correct files to the boot media device for subsequent system boots.

Steps

1. Refer to References to link to the *NetApp Support Site* to download the files used for performing the netboot of the system.
2. Download the appropriate ONTAP software from the software download section of the NetApp Support Site and store the `<ontap_version>_image.tgz` file on a web-accessible directory.
3. Change to the web-accessible directory and verify that the files you need are available.
4. Your directory listing should contain `<ontap_version>_image.tgz`.
5. Configure the netboot connection by choosing one of the following actions.

You must use the management port and IP as the netboot connection. Do not use a data LIF IP or a data outage might occur while the upgrade is being performed.

If Dynamic Host Configuration Protocol (DHCP) is…	Then…
Running	Configure the connection automatically by using the following command at the boot environment prompt: `ifconfig e0M -auto`
Not running	Manually configure the connection by using the following command at the boot environment prompt: `ifconfig e0M -addr=<filer_addr> -mask=<netmask> -gw=<gateway> - dns=<dns_addr> domain=<dns_domain>` `<filer_addr>` is the IP address of the storage system. `<netmask>` is the network mask of the storage system. `<gateway>` is the gateway for the storage system. `<dns_addr>` is the IP address of a name server on your network. This parameter is optional. `<dns_domain>` is the Domain Name Service (DNS) domain name. This parameter is optional. Other parameters might be necessary for your interface. Enter `help ifconfig` at the firmware prompt for details.

6. Perform netboot on node2:

   `netboot http://<web_server_ip/path_to_web_accessible_directory>/netboot/kernel`

   Do not interrupt the boot.

7. Wait for the node2 now running on the AFF A900 controller module to boot and display the boot menu options as shown in the following output:

```
Please choose one of the following:

(1)  Normal Boot.
(2)  Boot without /etc/rc.
(3)  Change password.
(4)  Clean configuration and initialize all disks.
(5)  Maintenance mode boot.
(6)  Update flash from backup config.
(7)  Install new software first.
(8)  Reboot node.
(9)  Configure Advanced Drive Partitioning.
(10) Set Onboard Key Manager recovery secrets.
(11) Configure node for external key management.
Selection (1-11)?
```

8. From the boot menu, select option `(7) Install new software first`.

This menu option downloads and installs the new ONTAP image to the boot device.

> Disregard the following message: `This procedure is not supported for Non-Disruptive Upgrade on an HA pair`. This note applies to nondisruptive ONTAP software upgrades, and not controller upgrades.
>
> Always use netboot to update the new node to the desired image. If you use another method to install the image on the new controller, the wrong image might install. This issue applies to all ONTAP releases.

9. If you are prompted to continue the procedure, enter `y`, and when prompted for the package, enter the URL:
   `http://<web_server_ip/path_to_web-accessible_directory>/<ontap_version>_image.tgz`

   The `<path_to_the_web-accessible_directory>` should lead to where you downloaded the `<ontap_version>_image.tgz` in Step 2.

10. Complete the following substeps to reboot the controller module:
    a. Enter `n` to skip the backup recovery when you see the following prompt:

    ```
    Do you want to restore the backup configuration now? {y|n}
    ```

    b. Enter `y` to reboot when you see the following prompt:

    ```
    The node must be rebooted to start using the newly installed
    software. Do you want to reboot now? {y|n}
    ```

    The controller module reboots but stops at the boot menu because the boot device was reformatted, and the configuration data must be restored.

11. At the prompt, run the `wipeconfig` command to clear any previous configuration on the boot media.
    a. When you see the message below, answer `yes`:

    ```
    This will delete critical system configuration, including cluster
    membership.
    Warning: do not run this option on a HA node that has been taken
    over.
    Are you sure you want to continue?:
    ```

    b. The node reboots to finish the `wipeconfig` and then stops at the boot menu.

12. Select maintenance mode `5` from the boot menu and enter `y` when you are prompted to continue with the boot.

13. Verify that the controller and chassis are configured as `ha`:

```
ha-config show
```

The following example shows the output of the `ha-config show` command:

```
Chassis HA configuration: ha
Controller HA configuration: ha
```

14. If the controller and chassis are not configured as `ha`, use the following commands to correct the configuration:

```
ha-config modify controller ha
```

```
ha-config modify chassis ha
```

15. Halt node2:

```
halt
```

Node2 should stop at the LOADER> prompt.

16. On node2, check the system date, time, and time zone:

```
date
```

17. On node2, check the date by using the following command at the boot environment prompt:

```
show date
```

18. If necessary, set the date on node2:

```
set date <mm/dd/yyyy>
```

Set the corresponding UTC date on node2.

19. On node2, check the time by using the following command at the boot environment prompt:

```
show time
```

20. If necessary, set the time on node2:

```
set time <hh:mm:ss>
```

Set the corresponding UTC time on node2.

21. If necessary, set the partner system ID on node2:

This is the system ID of the node1 that you are upgrading to an AFF A900.

```
setenv partner-sysid <node1_sysid>
```

a. Save the settings:

```
saveenv
```

22. On node2, at the LOADER prompt, verify the `partner-sysid` for node1:

```
printenv partner-sysid
```

For node2, the `partner-sysid` must be that of node1.

Stage 6. Boot node2 with the AFF A900 controller module and NVRAM module

Boot node2 with the AFF A900 controller module and NVRAM module

Node2 with the AFF A900 controller module and NVRAM module is now ready for upgrade. Upgrading from an AFF A700 to an AFF A900 by swapping the controller module and NVRAM module involves moving only the console and management connections. This section provides the steps required to boot node2 with the AFF A900 controller module and NVRAM module.

Steps

1. If NetApp Storage Encryption (NSE) is in use on this configuration, the `setenv bootarg.storageencryption.support` command must be set to `true`, and the `kmip.init.maxwait` variable must be set to `off` to avoid a boot loop after the node2 configuration is loaded:

```
setenv bootarg.storageencryption.support true

setenv kmip.init.maxwait off
```

2. Boot the node into `boot_menu`:

```
boot_ontap menu
```

3. The node stops at the boot menu. Enter "22/7" and select the hidden option `boot_after_controller_replacement`. To reassign the AFF A700 node1 disks to AFF A900 node1, at the prompt, enter the actual node name of node2. Use the following example as a reference:

```
LOADER-A> boot_ontap menu
.
.
<output truncated>
.
All rights reserved.
*****************************
*                           *
* Press Ctrl-C for Boot Menu. *
*                           *
*****************************
```

```
.
<output truncated>
.
Please choose one of the following:

(1)  Normal Boot.
(2)  Boot without /etc/rc.
(3)  Change password.
(4)  Clean configuration and initialize all disks.
(5)  Maintenance mode boot.
(6)  Update flash from backup config.
(7)  Install new software first.
(8)  Reboot node.
(9)  Configure Advanced Drive Partitioning.
(10) Set Onboard Key Manager recovery secrets.
(11) Configure node for external key management.
Selection (1-11)? 22/7

(22/7)                          Print this secret List
(25/6)                          Force boot with multiple filesystem
disks missing.
(25/7)                          Boot w/ disk labels forced to clean.
(29/7)                          Bypass media errors.
(44/4a)                         Zero disks if needed and create new
flexible root volume.
(44/7)                          Assign all disks, Initialize all disks
as SPARE, write DDR labels
.
.
<output truncated>
.
.
(wipeconfig)                          Clean all configuration on boot
device
(boot_after_controller_replacement) Boot after controller upgrade
(boot_after_mcc_transition)         Boot after MCC transition
(9a)                                  Unpartition all disks and remove
their ownership information.
(9b)                                  Clean configuration and initialize
node with partitioned disks.
(9c)                                  Clean configuration and initialize
node with whole disks.
(9d)                                  Reboot the node.
(9e)                                  Return to main boot menu.
```

```
The boot device has changed. System configuration information could be
lost. Use option (6) to restore the system configuration, or option (4)
to initialize all disks and setup a new system.
Normal Boot is prohibited.

Please choose one of the following:

(1)  Normal Boot.
(2)  Boot without /etc/rc.
(3)  Change password.
(4)  Clean configuration and initialize all disks.
(5)  Maintenance mode boot.
(6)  Update flash from backup config.
(7)  Install new software first.
(8)  Reboot node.
(9)  Configure Advanced Drive Partitioning.
(10) Set Onboard Key Manager recovery secrets.
(11) Configure node for external key management.
Selection (1-11)? boot_after_controller_replacement

This will replace all flash-based configuration with the last backup to
disks. Are you sure you want to continue?: yes

.
.
<output truncated>
.
.
Controller Replacement: Provide name of the node you would like to
replace:<nodename of the node being replaced>
Changing sysid of node node1 disks.
Fetched sanown old_owner_sysid = 536940063 and calculated old sys id =
536940063
Partner sysid = 4294967295, owner sysid = 536940063
.
.
<output truncated>
.
.
varfs_backup_restore: restore using /mroot/etc/varfs.tgz
varfs_backup_restore: attempting to restore /var/kmip to the boot device
varfs_backup_restore: failed to restore /var/kmip to the boot device
varfs_backup_restore: attempting to restore env file to the boot device
varfs_backup_restore: successfully restored env file to the boot device
wrote key file "/tmp/rndc.key"
```

```
varfs_backup_restore: timeout waiting for login
varfs_backup_restore: Rebooting to load the new varfs
Terminated
<node reboots>

System rebooting...

.
.
Restoring env file from boot media...
copy_env_file:scenario = head upgrade
Successfully restored env file from boot media...
Rebooting to load the restored env file...
.
System rebooting...
.
.
.
<output truncated>
.
.
.
.
WARNING: System ID mismatch. This usually occurs when replacing a boot
device or NVRAM cards!
Override system ID? {y|n} y
.
.
.
.
Login:
```

In the preceding console output example, ONTAP will prompt you for the partner node name if the system uses Advanced Disk Partitioning (ADP) disks.

The system IDs shown in the preceding example are example IDs. The actual system IDs of the nodes that you are upgrading will be different.

Between entering node names at the prompt and the login prompt, the node reboots a few times to restore the environment variables, update firmware on the cards in the system, and for other ONTAP updates.

Verify the node2 installation

You must verify the node2 installation with the AFF A900 controller module and NVRAM module. Because there is no change to physical ports, you are not required to map the physical ports from the AFF A700 node2 to the AFF A900 node2.

About this task

After you boot node1 with the AFF A900 controller module, you must verify that it is installed correctly. You must wait for node2 to join quorum and then resume the controller replacement operation.

At this point in the procedure, the operation pauses while node2 joins quorum.

Steps

1. Verify that node2 has joined quorum:

   `cluster show -node node2 -fields health`

   The output of the `health` field should be `true`.

2. Verify that node2 is part of the same cluster as node1 and that it is healthy:

   `cluster show`

3. Switch to advanced privilege mode:

   `set advanced`

4. Check the status of the controller replacement operation and verify that it is in a paused state and in the same state that it was in before node2 was halted to perform the physical tasks of installing new controllers and moving cables:

   `system controller replace show`

   `system controller replace show-details`

5. Resume the controller replacement operation:

   `system controller replace resume`

6. The controller replacement operation pauses for intervention with the following message:

```
Cluster::*> system controller replace show
Node          Status                        Error-Action
------------  ------------------------
-----------------------------------
Node2         Paused-for-intervention       Follow the instructions given
in
                                            Step Details
Node1         None

Step Details:
-----------------------------------------
To complete the Network Reachability task, the ONTAP network
configuration must be manually adjusted to match the new physical
network configuration of the hardware. This includes:


1. Re-create the interface group, if needed, before restoring VLANs. For
detailed commands and instructions, refer to the "Re-creating VLANs,
ifgrps, and broadcast domains" section of the upgrade controller
hardware guide for the ONTAP version running on the new controllers.
2. Run the command "cluster controller-replacement network displaced-
vlans show" to check if any VLAN is displaced.
3. If any VLAN is displaced, run the command "cluster controller-
replacement network displaced-vlans restore" to restore the VLAN on the
desired port.
2 entries were displayed.
```

In this procedure, section *Re-creating VLANs, ifgrps, and broadcast domains* has been renamed *Restore network configuration on node2*.

7. With the controller replacement in a paused state, proceed to Restore network configuration on node2.

Restore network configuration on node2

After you confirm that node2 is in quorum and can communicate with node1, verify that node1's VLANs, interface groups, and broadcast domains are seen on node2. Also, verify that all node2 network ports are configured in their correct broadcast domains.

About this task

For more information on creating and re-creating VLANs, interface groups, and broadcast domains, refer to References to link to the *Network Management* content.

Steps

1. List all the physical ports that are on upgraded node2:

```
network port show -node node2
```

All physical network ports, VLAN ports, and interface group ports on the node are displayed. From this output, you can see any physical ports that have been moved into the `Cluster` broadcast domain by ONTAP. You can use this output to aid in deciding which ports should be used as interface group member ports, VLAN base ports, or standalone physical ports for hosting LIFs.

2. List the broadcast domains on the cluster:

   ```
   broadcast-domain show
   ```

3. List network port reachability of all ports on node2:

   ```
   network port reachability show -node node2
   ```

   You should see output similar to the following example. The port and broadcast names vary.

   ```
   Cluster::*> network port reachability show -node local
   Node      Port     Expected Reachability               Reachability
   Status
   --------- -------- ----------------------------------
   ---------------------
   Node2
             e0M      Default:Mgmt                       no-reachability
             e10a     Default:Default-3                  ok
             e10b     Default:Default-4                  ok
             e11a     Cluster:Cluster                    no-reachability
             e11b     Cluster:Cluster                    no-reachability
             e11c     -                                  no-reachability
             e11d     -                                  no-reachability
             e2a      Default:Default-1                  ok
             e2b      Default:Default-2                  ok
             e9a      Default:Default                    no-reachability
             e9b      Default:Default                    no-reachability
             e9c      Default:Default                    no-reachability
             e9d      Default:Default                    no-reachability
   13 entries were displayed.
   ```

   In the preceding example, node2 has booted and joined quorum after controller replacement. It has several ports that have no reachability and are pending a reachability scan.

4. Repair the reachability for each of the ports on node2 with a reachability status other than `ok` by using the following command, in the following order:

   ```
   network port reachability repair -node <node_name> -port <port_name>
   ```

   a. Physical ports

   b. VLAN ports

   You should see output like the following example:

```
Cluster ::> reachability repair -node node2 -port e9d
```

```
Warning: Repairing port "node2:e9d" may cause it to move into a
different broadcast domain, which can cause LIFs to be re-homed away
from the port. Are you sure you want to continue? {y|n}:
```

A warning message, as shown in the preceding example, is expected for ports with a reachability status that might be different from the reachability status of the broadcast domain where it is currently located. Review the connectivity of the port and answer `y` or `n` as appropriate.

Verify that all physical ports have their expected reachability:

```
network port reachability show
```

As the reachability repair is performed, ONTAP attempts to place the ports in the correct broadcast domains. However, if a port's reachability cannot be determined and does not belong to any of the existing broadcast domains, ONTAP will create new broadcast domains for these ports.

5. Verify port reachability:

   ```
   network port reachability show
   ```

   When all ports are correctly configured and added to the correct broadcast domains, the `network port reachability show` command should report the reachability status as `ok` for all connected ports, and the status as `no-reachability` for ports with no physical connectivity. If any port reports a status other than these two, perform the reachability repair and add or remove ports from their broadcast domains as instructed in Step 4.

6. Verify that all ports have been placed into broadcast domains:

   ```
   network port show
   ```

7. Verify that all ports in the broadcast domains have the correct maximum transmission unit (MTU) configured:

   ```
   network port broadcast-domain show
   ```

8. Restore LIF home ports, specifying the Vserver and LIF home ports, if any, that need to be restored by using the following steps:

   a. List any LIFs that are displaced:

      ```
      displaced-interface show
      ```

   b. Restore LIF home nodes and home ports:

      ```
      displaced-interface restore-home-node -node <node_name> -vserver
      <vserver_name> -lif-name <LIF_name>
      ```

9. Verify that all LIFs have a home port and are administratively up:

```
network interface show -fields home-port,status-admin
```

Restore key-manager configuration on node2

If you are using NetApp Volume Encryption (NVE) to encrypt volumes on the system that you are upgrading, the encryption configuration must be synchronized to the new nodes. Encrypted volumes are taken offline when ARL is complete for node1 aggregates from node2 to node1.

About this task

Synchronize the encryption configuration to the new nodes by performing the following steps:

Steps

1. Synchronize the encryption configuration for Onboard Key Manager (OKM) by using the following command at the cluster prompt:

   ```
   security key-manager onboard sync
   ```

2. Enter the cluster-wide passphrase for the OKM.

Move non-root aggregates and NAS data LIFs back to node2

After you verify network configuration on node2 and before you relocate aggregates from node1 to node2, you must verify that the NAS data LIFs belonging to node2 that are currently on node1 are relocated from node1 to node2. You must also verify that the SAN LIFs exist on node2.

About this task

Remote LIFs handle traffic to SAN LUNs during the upgrade procedure. Moving SAN LIFs is not necessary for cluster or service health during the upgrade. SAN LIFs are not moved unless they need to be mapped to new ports. After you bring node2 online, you must verify that the LIFs are healthy and located on the appropriate ports.

Steps

1. Resume the relocation operation:

   ```
   system controller replace resume
   ```

   The system performs the following tasks:

   - Cluster quorum check
   - System ID check
   - Image version check
   - Target platform check
   - Network reachability check

   The operation pauses at this stage in the network reachability check.

2. Resume the relocation operation:

```
system controller replace resume
```

The system performs the following checks:

- Cluster health check
- Cluster LIF status check

After performing these checks, the system relocates the non-root aggregates and NAS data LIFs back to node2, which is now running on the AFF A900 controller.

The controller replacement operation pauses after the resource relocation is complete.

3. Check the status of the aggregate relocation and NAS data LIF move operations:

```
system controller replace show-details
```

If the controller replacement procedure is paused, check and correct the error, if any, and then issue `resume` to continue the operation.

4. If necessary, restore and revert any displaced LIFs. List any displaced LIFs:

```
cluster controller-replacement network displaced-interface show
```

If any LIFs are displaced, restore the home node back to node2:

```
cluster controller-replacement network displaced-interface restore-home-node
```

5. Resume the operation to prompt the system to perform the required post-checks:

```
system controller replace resume
```

The system performs the following post-checks:

- Cluster quorum check
- Cluster health check
- Aggregates reconstruction check
- Aggregate status check
- Disk status check
- Cluster LIF status check
- Volume check

Stage 7. Complete the upgrade

Confirm that the new controllers are set up correctly

To confirm the correct setup, you must verify that the HA pair is enabled. You must also verify that node1 and node2 can access each other's storage and that neither owns data LIFs belonging to other nodes on the cluster. In addition, you must verify that all data aggregates are on their correct home nodes, and that the volumes for both nodes are online. If one of the new nodes has a unified target adapter, you must restore any port

configurations and you might need to change the use of the adapter.

Steps

1. After the post-checks of node2, the storage failover and cluster HA pair for the node2 cluster are enabled. When the operation is done, both nodes show as completed and the system performs some cleanup operations.
2. Verify that storage failover is enabled:

   ```
   storage failover show
   ```

   The following example shows the output of the command when storage failover is enabled:

   ```
   cluster::> storage failover show
                                  Takeover
   Node              Partner           Possible          State Description
   -------------  --------------   --------------  ------------------
   node1             node2             true              Connected to node2
   node2             node1             true              Connected to node1
   ```

3. Verify that node1 and node2 belong to the same cluster by using the following command and examining the output:

   ```
   cluster show
   ```

4. Verify that node1 and node2 can access each other's storage by using the following command and examining the output:

   ```
   storage failover show -fields local-missing-disks,partner-missing-disks
   ```

5. Verify that neither node1 nor node2 owns data LIFs home-owned by other nodes in the cluster by using the following command and examining the output:

   ```
   network interface show
   ```

   If neither node1 or node2 owns data LIFs home-owned by other nodes in the cluster, revert the data LIFs to their home owner:

   ```
   network interface revert
   ```

6. Verify that the aggregates are owned by their respective home nodes.

   ```
   storage aggregate show -owner-name <node1>

   storage aggregate show -owner-name <node2>
   ```

7. Determine whether any volumes are offline:

   ```
   volume show -node <node1> -state offline

   volume show -node <node2> -state offline
   ```

8. If any volumes are offline, compare them with the list of offline volumes that you captured in the section Prepare the nodes for upgrade, and bring online any of the offline volumes, as required, by using the following command, once for each volume:

   ```
   volume online -vserver <vserver_name> -volume <volume_name>
   ```

9. Install new licenses for the new nodes by using the following command for each node:

   ```
   system license add -license-code <license_code,license_code,license_code…>
   ```

   The license-code parameter accepts a list of 28 upper-case alphabetic character keys. You can add one license at a time, or you can add multiple licenses at once, separating each license key by a comma.

10. Remove all of the old licenses from the original nodes by using one of the following commands:

    ```
    system license clean-up -unused -expired

    system license delete -serial-number <node_serial_number> -package
    <licensable_package>
    ```

    - Delete all expired licenses:

      ```
      system license clean-up -expired
      ```

    - Delete all unused licenses:

      ```
      system license clean-up -unused
      ```

    - Delete a specific license from a cluster by using the following commands on the nodes:

      ```
      system license delete -serial-number <node1_serial_number> -package *
      system license delete -serial-number <node2_serial_number> -package *
      ```

    The following output is displayed:

    ```
    Warning: The following licenses will be removed:
    <list of each installed package>
    Do you want to continue? {y|n}: y
    ```

    Enter `y` to remove all of the packages.

11. Verify that the licenses are correctly installed by using the following command and examining its output:

    ```
    system license show
    ```

    You can compare the output with the output that you captured in the Prepare the nodes for upgrade section.

12. If NetApp Storage Encryption (NSE) was in use on the configuration and you set the `setenv bootarg.storageencryption.support` command to `true` with the `<kmip.init.maxwait>` variable `off` (in *Boot node2 with the AFF A900 controller module and NVRAM module*, Step 1), you must

reset the variable:

```
set diag; systemshell -node <node_name> -command sudo kenv -u -p
kmip.init.maxwait
```

13. Configure the SPs by using the following command on both nodes:

    ```
    system service-processor network modify -node <node_name>
    ```

    Refer to References to link to the *System Administration Reference* for information about the SPs and the *ONTAP 9 Commands: Manual Page Reference* for detailed information about the system `service-processor network modify` command.

14. Take the following actions on one of the new nodes:
    a. Enter advanced privilege level:

       ```
       set -privilege advanced
       ```

    b. Enter the following command:

       ```
       storage failover modify -node <node_name> - cifs- ndo-duration
       default|medium|low
       ```

       - Enter `medium` if the system will have workloads in which 50% to 75% of the operations will be 4 KB or smaller.
       - Enter `low` if the system will have workloads in which 75% to 100% of the operations will be 4 KB or smaller.

    c. Return to the admin level:

       ```
       set -privilege admin
       ```

    d. Reboot the system to ensure that the changes take effect.
15. If you want to set up a switchless cluster on the new nodes, refer to References to link to the *NetApp Support Site* and follow the instructions in *Transitioning to a two-node switchless cluster*.

After you finish

If Storage Encryption is enabled on node1 and node2, complete the section Set up Storage Encryption on the new controller module. Otherwise, complete the section Decommission the old system.

Set up Storage Encryption on the new controller module

If the replaced controller or the HA partner of the new controller uses Storage Encryption, you must configure the new controller module for Storage Encryption, including installing SSL certificates and setting up key management servers.

About this task

This procedure includes steps that are performed on the new controller module. You must enter the command on the correct node.

Steps

1. Verify that the key management servers are still available, their status, and their authentication key

information:

```
security key-manager external show-status

security key-manager onboard shoecw-backup
```

2. Add the key management servers listed in the previous step to the key management server list in the new controller.
   a. Add the key management server:

      ```
      security key-manager external add-servers -key-servers
      <key_management_server_ip_address>
      ```

   b. Repeat the previous step for each listed key management server. You can link up to four key management servers.
   c. Verify the that the key management servers were added successfully:

      ```
      security key-manager external show
      ```

3. On the new controller module, run the key management setup wizard to set up and install the key management servers.

   You must install the same key management servers that are installed on the existing controller module.

   a. Launch the key management server setup wizard on the new node:

      ```
      security key-manager external enable
      ```

   b. Complete the steps in the wizard to configure key management servers.
4. Restore authentication keys from all linked key management servers to the new node:

   ```
   security key-manager external restore -node <new_controller_name>
   ```

Set up NetApp Volume Encryption on the new controller module

If the replaced controller or high availability (HA) partner of the new controller uses NetApp Volume Encryption (NVE), you must configure the new controller module for NVE.

About this task

This procedure includes steps that are performed on the new controller module. You must enter the command on the correct node.

Steps

1. Verify that the key management servers are still available, their status, and their authentication key information:

   ```
   security key-manager key query -node node
   ```

2. Add the key management servers listed in the previous step to the key management server list in the new controller:

a. Add the key management server:

```
security key-manager external add-servers -key-servers
<key_management_server_ip_address>
```

b. Repeat the previous step for each listed key management server. You can link up to four key management servers.

c. Verify the that the key management servers were added successfully:

```
security key-manager external show
```

3. On the new controller module, run the key management setup wizard to set up and install the key management servers.

   You must install the same key management servers that are installed on the existing controller module.

   a. Launch the key management server setup wizard on the new node:

   ```
   security key-manager external enable
   ```

   b. Complete the steps in the wizard to configure key management servers.

4. Restore authentication keys from all linked key management servers to the new node:

For…	Use this command…
External key management (EKM)	`security key-manager external restore` This command needs the OKM passphrase
Onboard Key Manager	`security key-manager onboard sync`

After you finish

Check if any volumes were taken offline because authentication keys were not available or EKM servers could not be reached. Bring those volumes back online by using the `volume online` command.

After you finish

Check if any volumes were taken offline because authentication keys were not available or External Key Management servers could not be reached. Bring those volumes back online using the `volume online` command.

Decommission the old system

After upgrading, you can decommission the old system through the NetApp Support Site. Decommissioning the system tells NetApp that the system is no longer in operation and removes it from support databases.

Steps

1. Refer to References to link to the *NetApp Support Site* and log in.
2. Select **Products > My Products** from the menu.
3. On the **View Installed Systems** page, choose which **Selection Criteria** you want to use to display information about your system.

You can choose one of the following to locate your system:

- Serial Number (located on the back of the unit)
- Serial Numbers for My Location

4. Select **Go!**

   A table displays cluster information, including the serial numbers.

5. Locate the cluster in the table and select **Decommission this system** from the Product Tool Set drop-down menu.

Resume SnapMirror operations

You can resume SnapMirror transfers that were quiesced before upgrade and resume the SnapMirror relationships. The updates are on schedule after the upgrade is completed.

Steps

1. Verify the SnapMirror status on the destination:

   ```
   snapmirror show
   ```

2. Resume the SnapMirror relationship:

   ```
   snapmirror resume -destination-vserver <vserver_name>
   ```

Troubleshoot

Troubleshoot

You might encounter a failure while upgrading the node pair. The node might crash, aggregates might not relocate, or LIFs might not migrate. The cause of the failure and its solution depend on when the failure occurred during the upgrade procedure.

Refer to the table describing the different phases of the procedure in the section Overview of the ARL upgrade. Information about the failures that can occur is listed by the phase of the procedure.

Aggregate relocation failures

Aggregate relocation (ARL) might fail at different points during the upgrade.

Check for aggregate relocation failure

During the procedure, ARL might fail in Stage 2, Stage 3, or Stage 5.

Steps

1. Enter the following command and examine the output:

   ```
   storage aggregate relocation show
   ```

   The `storage aggregate relocation show` command shows you which aggregates were successfully relocated and which ones were not, along with the causes of failure.

2. Check the console for any EMS messages.
3. Take one of the following actions:

   - Take the appropriate corrective action, depending on the output of the `storage aggregate relocation show` command and the output of the EMS message.
   - Force relocation of the aggregate or aggregates by using the `override-vetoes` option or the `override-destination-checks` option of the `storage aggregate relocation start` command.

   For detailed information about the `storage aggregate relocation start`, `override- vetoes`, and `override-destination-checks` options, refer to References to link to the *ONTAP 9 Commands: Manual Page Reference*.

Aggregates originally on node1 are owned by node2 after completion of the upgrade

At the end of the upgrade procedure, node1 should be the new home node of aggregates that originally had node1 as the home node. You can relocate them after the upgrade.

About this task

Aggregates might fail to relocate correctly, that is, they have node2 as their home node instead of node1, under the following circumstances:

- During Stage 3, when aggregates are relocated from node2 to node1.

  Some of the aggregates being relocated have node1 as their home node. For example, such an aggregate could be called aggr_node_1. If relocation of aggr_node_1 fails during Stage 3, and relocation cannot be forced, then the aggregate is left behind on node2.

- After Stage 4, when node2 is replaced with the AFF A900 controller module and NVRAM module.

  When node2 is replaced, aggr_node_1 will come online with node1 as its home node instead of node2.

You can fix the incorrect ownership problem after Stage 6, after you have enabled storage failover by completing the following steps:

Steps

1. Get a list of aggregates:

   ```
   storage aggregate show -nodes <node2> -is-home true
   ```

   To identify aggregates that were not correctly relocated, refer to the list of aggregates with the home owner of node1 that you obtained in the section Prepare the nodes for upgrade and compare it with the output of the above command.

2. Compare the output of Step 1 with the output you captured for node1 in the section Prepare the nodes for upgrade and note any aggregates that were not correctly relocated.
3. Relocate the aggregates left behind on node2:

   ```
   storage aggregate relocation start -node <node2> -aggr <aggr_node_1>
   -destination <node1>
   ```

   Do not use the -ndo-controller-upgrade parameter during this relocation.

4. Verify that node1 is now the home owner of the aggregates:

   `storage aggregate show -aggregate <aggr1,aggr2,aggr3…> -fields home-name`

   `<aggr1,aggr2,aggr3…>` is the list of aggregates that had node1 as the original home owner.

   Aggregates that do not have node1 as home owner can be relocated to node1 using the same relocation command in Step 3.

Reboots, panics, or power cycles

The system might crash – reboot, panic, or go through a power cycle – during different stages of the upgrade.

The solution to these problems depends on when they occur.

Reboots, panics, or power cycles during the pre-check phase

Node1 or node2 crashes before the pre-check phase with HA pair still enabled

If either node1 or node2 crashes before the pre-check phase, no aggregates have been relocated yet and the HA pair configuration is still enabled.

About this task

Takeover and giveback can proceed normally.

Steps

1. Check the console for EMS messages that the system might have issued and take the recommended corrective action.
2. Continue with the node-pair upgrade procedure.

Reboots, panics, or power cycles during first resource-release phase

Node1 crashes during the first resource-release phase with HA pair still enabled

Some or all aggregates have been relocated from node1 to node2, and HA pair is still enabled. Node2 takes over node1's root volume and any non-root aggregates that were not relocated.

About this task

Ownership of aggregates that were relocated look the same as the ownership of non-root aggregates that were taken over because the home owner has not changed.

When node1 enters the `waiting for giveback` state, node2 gives back all of the node1 non- root aggregates.

Steps

1. After node1 is booted up, all the non-root aggregates of node1 have moved back to node1. You must perform a manual aggregate relocation of the aggregates from node1 to node2:
   `storage aggregate relocation start -node node1 -destination node2 -aggregate -list * - ndocontroller-upgrade true`
2. Continue with the node-pair upgrade procedure.

Node1 crashes during the first resource-release phase while HA pair is disabled

Node2 does not take over, but it is still serving data from all non-root aggregates.

Steps

1. Bring up node1.
2. Continue with the node-pair upgrade procedure.

Node2 fails during the first resource-release phase with HA pair still enabled

Node1 has relocated some or all of its aggregates to node2. The HA pair is enabled.

About this task

Node1 takes over all of node2's aggregates as well as any of its own aggregates that it had relocated to node2. When node2 boots up, the aggregate relocation is completed automatically.

Steps

1. Bring up node2.
2. Continue with the node-pair upgrade procedure.

Node2 crashes during the first resource-release phase and after HA pair is disabled

Node1 does not take over.

Steps

1. Bring up node2.

   A client outage occurs for all aggregates while node2 is booting up.

2. Continue the with rest of the node-pair upgrade procedure.

Reboots, panics, or power cycles during the first verification phase

Node2 crashes during the first verification phase with HA pair disabled

Node1 does not take over following a node2 crash as the HA pair is already disabled.

Steps

1. Bring up node2.

   A client outage occurs for all aggregates while node2 is booting up.

2. Continue with the node-pair upgrade procedure.

Node1 crashes during the first verification phase with HA pair disabled

Node2 does not take over, but it is still serving data from all non-root aggregates.

Steps

1. Bring up node1.
2. Continue with the node-pair upgrade procedure.

Reboots, panics, or power cycles during first resource-regain phase

Node2 crashes during the first resource-regain phase during aggregate relocation

Node2 has relocated some or all of its aggregates from node1 to node1. Node1 serves data from aggregates that were relocated. The HA pair is disabled and hence there is no takeover.

About this task

There is client outage for aggregates that were not relocated. On booting up node2, the aggregates of node1 are relocated to node1.

Steps

1. Bring up node2.
2. Continue with the node-pair upgrade procedure.

Node1 crashes during the first resource-regain phase during aggregate relocation

If node1 crashes while node2 is relocating aggregates to node1, the task continues after node1 boots up.

About this task

Node2 continues to serve remaining aggregates, but aggregates that were already relocated to node1 encounter client outage while node1 is booting up.

Steps

1. Bring up node1.
2. Continue with the controller upgrade.

Reboots, panics, or power cycles during post-check phase

Node1 or node2 crashes during the post-check phase

The HA pair is disabled hence this is no takeover. There is a client outage for aggregates belonging to the node that rebooted.

Steps

1. Bring up the node.
2. Continue with the node-pair upgrade procedure.

Reboots, panics, or power cycles during second resource-release phase

Node1 crashes during the second resource-release phase

If node1 crashes while node2 is relocating aggregates, the task continues after node1 boots up.

About this task

Node2 continues to serve remaining aggregates but aggregates that were already relocated to node1 and node1’s own aggregates encounter client outages while node1 is booting.

Steps

1. Bring up node1.
2. Continue with the controller upgrade procedure.

Node2 crashes during the second resource-release phase

If node2 crashes during aggregate relocation, node2 is not taken over.

About this task

Node1 continues to serve the aggregates that have been relocated, but the aggregates owned by node2 encounter client outages.

Steps

1. Bring up node2.
2. Continue with the controller upgrade procedure.

Reboots, panics, or power cycles during the second verification phase

Node1 crashes during the second verification phase

If node1 crashes during this phase, takeover does not happen because the HA pair is already disabled.

About this task

There is a client outage for all aggregates until node1 reboots.

Steps

1. Bring up node1.
2. Continue with the node-pair upgrade procedure.

Node2 crashes during the second verification phase

If node2 crashes during this phase, takeover does not happen. Node1 serves data from the aggregates.

About this task

There is an outage for non-root aggregates that were already relocated until node2 reboots.

Steps

1. Bring up node2.
2. Continue with the node-pair upgrade procedure.

Issues that can arise in multiple stages of the procedure

Some issues can occur during different stages of the procedure.

Unexpected "storage failover show" command output

During the procedure, if the node that hosts all data aggregates panics or is rebooted accidentally, you might see unexpected output for the `storage failover show` command before and after the reboot, panic, or power cycle.

About this task

You might see unexpected output from the `storage failover show` command in Stage 2, Stage 3, Stage 4, or Stage 5.

The following example shows the expected output of the `storage failover show` command if there are no reboots or panics on the node that hosts all the data aggregates:

```
cluster::> storage failover show

                    Takeover
Node     Partner    Possible  State Description
-------  --------   --------- -----------------
node1    node2      false     Unknown
node2    node1      false     Node owns partner aggregates as part of the
non-disruptive head upgrade procedure. Takeover is not possible: Storage
failover is disabled.
```

The following example shows the output of the `storage failover show` command after a reboot or panic:

```
cluster::> storage failover show

                    Takeover
Node     Partner    Possible  State Description
-------  --------   --------- -----------------
node1    node2      -         Unknown
node2    node1      false     Waiting for node1, Partial giveback, Takeover
is not possible: Storage failover is disabled
```

Although the output says that a node is in partial giveback and that storage failover is disabled, you can disregard this message.

Steps

No action is required; continue with the node-pair upgrade procedure.

LIF migration failure

After you migrate LIFs, they might not come online after migration in Stage 2, Stage 3, or Stage 5.

Steps

1. Verify that the port MTU size is the same as that of the source node.

   For example, if the cluster port MTU size is 9000 on the source node, it should be 9000 on the destination node.

2. Check the physical connectivity of the network cable if the physical state of the port is `down`.

References

When performing the procedures in this content, you might need to consult reference content or go to reference websites.

- Reference content

- Reference sites

Reference content

Content specific to this upgrade are listed in the table below.

Content	Description
Administration overview with the CLI	Describes how to administer ONTAP systems, shows you how to use the CLI interface, how to access the cluster, how to manage nodes, and much more.
Decide whether to use System Manager or the ONTAP CLI for cluster setup	Describes how to set up and configure ONTAP.
Disk and aggregate management with the CLI	Describes how to manage ONTAP physical storage using the CLI. It shows you how to create, expand, and manage aggregates, how to work with Flash Pool aggregates, how to manage disks, and how to manage RAID policies.
Fabric-attached MetroCluster Installation and Configuration	Describes how to install and configure the MetroCluster hardware and software components in a fabric configuration.
FlexArray Virtualization Installation Requirements and Reference	Contains cabling instructions and other information for FlexArray Virtualization systems.
High Availability management	Describes how to install and manage high-availability clustered configurations, including storage failover and takeover/giveback.
Logical storage management with the CLI	Describes how to efficiently manage your logical storage resources, using volumes, FlexClone volumes, files, and LUNs, FlexCache volumes, deduplication, compression, qtrees, and quotas.
MetroCluster Management and Disaster Recovery	Describes how to perform MetroCluster switchover and switchback operations, both in planned maintenance operations, or in the event of a disaster.
MetroCluster Upgrade and Expansion	Provides procedures for upgrading controller and storage models in the MetroCluster configuration, transitioning from a MetroCluster FC to a MetroCluster IP configuration, and expanding the MetroCluster configuration by adding additional nodes.
Network Management	Describes how to configure and manage physical and virtual network ports (VLANs and interface groups), LIFs, routing, and host-resolution services in clusters; optimize network traffic by load balancing; and monitor the cluster by using SNMP.
ONTAP 9.0 Commands: Manual Page Reference	Describes syntax and usage of supported ONTAP 9.0 commands.
ONTAP 9.1 Commands: Manual Page Reference	Describes syntax and usage of supported ONTAP 9.1 commands.
ONTAP 9.2 Commands: Manual Page Reference	Describes syntax and usage of supported ONTAP 9.2 commands.
ONTAP 9.3 Commands: Manual Page Reference	Describes syntax and usage of supported ONTAP 9.3 commands.

Content	Description
ONTAP 9.4 Commands: Manual Page Reference	Describes syntax and usage of supported ONTAP 9.4 commands.
ONTAP 9.5 Commands: Manual Page Reference	Describes syntax and usage of supported ONTAP 9.5 commands.
ONTAP 9.6 Commands: Manual Page Reference	Describes syntax and usage of supported ONTAP 9.6 commands.
ONTAP 9.7 Commands: Manual Page Reference	Describes syntax and usage of supported ONTAP 9.7 commands.
ONTAP 9.8 Commands: Manual Page Reference	Describes syntax and usage of supported ONTAP 9.8 commands.
ONTAP 9.9.1 Commands: Manual Page Reference	Describes syntax and usage of supported ONTAP 9.9.1 commands.
ONTAP 9.10.1 Commands: Manual Page Reference	Describes syntax and usage of supported ONTAP 9.10.1 commands.
SAN management with the CLI	Describes how to configure and manage LUNs, igroups, and targets using the iSCSI and FC protocols, and namespaces and subsystems using the NVMe/FC protocol.
SAN configuration reference	Contains information about FC and iSCSI topologies and wiring schemes.
Upgrade by moving volumes or storage	Describes how to quickly upgrade controller hardware in a cluster by moving storage or volumes. Also describes how to convert a supported model to a disk shelf.
Upgrade ONTAP	Contains instructions for downloading and upgrading ONTAP.
Use "system controller replace" commands to upgrade AFF A700 to AFF A900 running ONTAP 9.10.1 or later	Describes the aggregate relocation procedures needed to non-disruptively upgrade an AFF A700 to an AFF A900 running ONTAP 9.10.1 or later by using "system controller replace" commands.
Use "system controller replace" commands to upgrade controller hardware running ONTAP 9.8 or later	Describes the aggregate relocation procedures needed to non-disruptively upgrade controllers running ONTAP 9.8 by using "system controller replace" commands.
Use aggregate relocation to manually upgrade controller hardware running ONTAP 9.8 or later	Describes the aggregate relocation procedures needed to perform manual non-disruptive controller upgrades running ONTAP 9.8 or later.
Use "system controller replace" commands to upgrade controller hardware running ONTAP 9.5 to ONTAP 9.7	Describes the aggregate relocation procedures needed to non-disruptively upgrade controllers running ONTAP 9.5 to ONTAP 9.7 by using "system controller replace" commands.
Use aggregate relocation to manually upgrade controller hardware running ONTAP 9.7 or earlier	Describes the aggregate relocation procedures needed to perform manual non-disruptive controller upgrades running ONTAP 9.7 or earlier.

Reference sites

The NetApp Support Site also contains documentation about network interface cards (NICs) and other

hardware that you might use with your system. It also contains the Hardware Universe, which provides information about the hardware that the new system supports.

Access ONTAP 9 documentation.

Access the Active IQ Config Advisor tool.

Use "system controller replace" commands to upgrade controller hardware running ONTAP 9.8 or later

Overview

This procedure describes how to upgrade the controller hardware using aggregate relocation (ARL) for the following system configurations:

Method	ONTAP version	Supported systems
Using `system controller replace` commands	9.8 or later	Link to supported systems matrix

During the procedure, you upgrade the original controller hardware with the replacement controller hardware, relocating the ownership of non-root aggregates. You migrate aggregates multiple times from node to node to confirm that at least one node is serving data from the aggregates throughout the upgrade procedure. You also migrate data logical interfaces (LIFs) and assign the network ports on the new controller to the interface groups as you proceed.

Terminology used in this information

In this information, the original nodes are called "node1" and "node2", and the new nodes are called "node3" and "node4". During the described procedure, node1 is replaced by node3, and node2 is replaced by node4. The terms "node1", "node2", "node3", and "node4" are used only to distinguish between the original and new nodes. When following the procedure, you must substitute the real names of your original and new nodes. However, in reality, the names of the nodes do not change: node3 has the name node1, and node4 has the name node2 after the controller hardware is upgraded.

Throughout this information, the term "systems with FlexArray Virtualization Software" refers to systems that belong to these new platforms. The term "V-Series system" refers to the separate hardware systems that can attach to storage arrays.

Important information:

- This procedure is complex and assumes that you have advanced ONTAP administration skills. You also must read and understand the Guidelines for upgrading controllers with ARL and the Overview of the ARL upgrade sections before beginning the upgrade.
- This procedure assumes that the replacement controller hardware is new and has not been used. The steps required to prepare used controllers with the `wipeconfig` command are not included in this procedure. You must contact technical support if the replacement controller hardware was previously used, especially if the controllers were running Data ONTAP in 7- Mode.
- You can use ARL to perform a non-disruptive simplified controller upgrade to a new controller running a later ONTAP version than the version running on the cluster you are upgrading. The ONTAP version combinations for old and new controllers are determined by the ONTAP software release NDU cadence model. For example, if you have a controller running ONTAP 9.8, and that is the last supported version for that controller, you can upgrade to a new controller running an ONTAP version later than ONTAP 9.8.

This upgrade procedure primarily applies to upgrade scenarios where the controller model you are replacing does not support later ONTAP versions and the new controller does not support earlier ONTAP versions.

- You can use this procedure to upgrade the controller hardware in clusters with more than two nodes; however, you need to perform the procedure separately for each high-availability (HA) pair in the cluster.
- This procedure applies to FAS systems, V-Series systems, AFF systems, and systems with FlexArray Virtualization Software. FAS systems released after ONTAP 9.5 can attach to storage arrays if the required license is installed. For more information about the storage array and V-Series models, refer to References to link to the *Hardware Universe* and go to the V-Series Support Matrix.
- This procedure applies to systems running 4-node NetApp MetroCluster configuration or higher. Since MetroCluster configuration sites can be at two physically different locations, the automated controller upgrade must be carried out individually at each MetroCluster site for an HA pair.
- For non-MetroCluster systems, such as HA clusters, the ARL upgrade is the only supported procedure.
- If you are upgrading from an AFF A320 system, you can use volume moves to upgrade controller hardware or contact technical support. Refer to References to link to *Upgrade by moving volumes or storage*.

Automate the controller upgrade process

During a controller upgrade, the controller is replaced with another controller running a newer or more powerful platform. Earlier versions of this content contained instructions for a nondisruptive controller update process that was comprised of entirely manual steps. This content provides the steps for the new automated procedure which utilizes automatic network port reachability checks to further simplify the controller upgrade experience.

The manual process was lengthy and complex but in this simplified procedure you can implement a controller update using aggregate relocation, enabling more efficient nondisruptive upgrades for HA pairs. There are significantly fewer manual steps, especially around validation, collection of information, and post checks.

Decide whether to use the aggregate relocation procedure

This content describes how to upgrade the storage controllers in an HA pair with new controllers while keeping all the existing data and disks. This is a complex procedure that should be used only by experienced administrators.

You can use this content under the following circumstances:

- You are running ONTAP 9.8 or later.
- You do not want to add the new controllers as a new HA pair to the cluster and migrate the data using volume moves.
- You are experienced in administering ONTAP and are comfortable with the risks of working in the diagnostic privilege mode.
- If you are upgrading a MetroCluster configuration, it is a four-node or higher FC configuration, and all nodes are running ONTAP 9.8 or later.

  For upgrading MetroCluster IP configurations, refer to References to link to the *MetroCluster Upgrade and Expansion* content.

You can use NetApp Storage Encryption (NSE) and NetApp Volume Encryption (NVE) with this procedure.

The following table shows the supported model matrix for the controller upgrade.

Old controller	Replacement controller
FAS8020, FAS8040, FAS8060, FAS8080	FAS8200, FAS8300, FAS8700, FAS9000
AFF8020, AFF8040, AFF8060, AFF8080	AFF A300, AFF A400, AFF A700, AFF A800[1]
FAS8200	FAS8700, FAS9000, FAS8300[3]
AFF A300	AFF A700, AFF A800[1], AFF A400[3]
AFF A320	AFF A400[2]

If your controller upgrade model combination is not in the above table, contact technical support.

[1]For the additional steps needed for AFF A800 systems, go to the step that references A800 in section Check and configure UTA/UTA2 ports on node3, Step 23, or Check and configure UTA/UTA2 ports on node4, Step 23.

[2]ARL automated upgrade from an AFF A320 to an AFF A400 system is supported from ONTAP 9.9.1.

[3]If you are upgrading from an AFF A300 to an AFF A400 or an FAS8200 to an FAS8300 system in a two-node switchless cluster configuration, you must pick temporary cluster ports for the controller upgrade. The AFF A400 and FAS8300 systems come in two configurations, as an Ethernet bundle where the mezzanine card ports are Ethernet type and as an FC bundle where the mezzanine ports are FC type.

- For an AFF A400 or an FAS8300 with an Ethernet type configuration, you can use any of the two mezzanine ports as temporary cluster ports.
- For an AFF A400 or an FAS8300 with an FC type configuration, you must add a four-port 10GbE network interface card (part number X1147A) to provide temporary cluster ports.
- After you complete a controller upgrade by using temporary cluster ports, you can nondisruptively migrate cluster LIFs to e3a and e3b, 100GbE ports on an AFF A400 system, and e0c and e0d, 100GbE ports on an FAS8300 system.

If you prefer a different method of upgrading the controller hardware and are willing to do volume moves, refer to References to link to *Upgrade by moving volumes or storage*.

Refer to References to link to the *ONTAP 9 Documentation Center* where you can access ONTAP 9 product documentation.

Required tools and documentation

You must have specific tools to install the new hardware, and you need to reference other documents during the upgrade process.

You need the following tools to perform the up grade:

- Grounding strap
- #2 Phillips screwdriver

Go to the References section to access the list of reference documents and reference sites required for this upgrade

Guidelines for upgrading controllers with ARL

To understand whether you can use ARL to upgrade a pair of controllers running ONTAP 9.8 or later depends on the platform and the configuration of both the original and replacement controllers.

Supported upgrades for ARL

When you upgrade a pair of nodes using this ARL procedure for ONTAP 9.8 or later, you must verify that ARL can be performed on the original and replacement controllers.

You must check the size of all defined aggregates and number of disks supported by the original system. You must then compare the aggregate sizes and number of disks supported to the aggregate size and number of disks supported by the new system. Refer to References to link to the *Hardware Universe* where this information is available. The aggregate size and the number of disks supported by the new system must be equal to or greater than the aggregate size and number of disks supported by the original system.

You must validate in the cluster mixing rules whether new nodes can become part of the cluster with the existing nodes when the original controller is replaced. For more information about cluster mixing rules, refer to References to link to the *Hardware Universe*.

If you are upgrading a system that supports internal drives (for example, an FAS2700 or AFF A250) but does NOT have internal drives, refer to References and use the procedure in the *Aggregate Relocation to Manually Upgrade Controller Hardware* content that is correct for your version of ONTAP.

If you have a system with more than two cluster ports per node, such as an FAS8080 or an AFF8080 system, before you start the upgrade, you must migrate and re-home the cluster LIFs to two cluster ports per node. If you perform the controller upgrade with more than two cluster ports per node, cluster LIFs might be missing on the new controller after the upgrade.

Controller upgrade using ARL is supported on systems configured with SnapLock Enterprise and SnapLock Compliance volumes.

Two-node switchless clusters

If you are upgrading nodes in a two-node switchless cluster, you can leave the nodes in the switchless cluster while performing the upgrade. You do not need to convert them to a switched cluster.

Upgrades not supported for ARL

You cannot perform the following upgrades:

- To replacement controllers that do not support the disk shelves connected to the original controllers

  Refer to References to link to the *Hardware Universe* for disk-support information.

- To entry level controllers with internal drives, for example: an FAS 2500.

  If you want to upgrade entry level controllers with internal drives, refer to References to link to *Upgrade by moving volumes or storage* and go to the procedure *Upgrading a pair of nodes running clustered Data*

ONTAP by moving volumes.

Troubleshooting

If any problems occur while upgrading the controllers, you can refer to the Troubleshoot section at the end of the procedure for more information and possible solutions.

If you do not find a solution to the problem you encountered, contact technical support.

Verify the health of the MetroCluster configuration

Before starting an upgrade on a Fabric MetroCluster configuration, you must check the health of the MetroCluster configuration to verify correct operation.

Steps

1. Verify that the MetroCluster components are healthy:

   `metrocluster check run`

   ```
   metrocluster_siteA::*> metrocluster check run
   ```

   The operation runs in the background.

2. After the `metrocluster check run` operation completes, view the results:

   `metrocluster check show`

   After approximately five minutes, the following results are displayed:

   ```
   metrocluster_siteA::*> metrocluster check show
   Last Checked On: 4/7/2019 21:15:05
   Component            Result
   ---------------      -------
   nodes                ok
   lifs                 ok
   config-replication   ok
   aggregates           warning
   clusters             ok
   connections          not-applicable
   volumes              ok
   7 entries were displayed.
   ```

3. Check the status of the running MetroCluster check operation:

   `metrocluster operation history show -job-id 38`

4. Verify that there are no health alerts:

```
system health alert show
```

Check for MetroCluster configuration errors

You can use the Active IQ Config Advisor tool available from the NetApp Support Site to check for common configuration errors.

About this task

Active IQ Config Advisor is a configuration validation and health check tool. You can deploy it at both secure sites and non-secure sites for data collection and system analysis.

Support for Config Advisor is limited, and available only online.

1. Download the Active IQ Config Advisor tool.
2. Run Active IQ Config Advisor, reviewing the output and following its recommendations to address any issues.

Verify switchover, healing, and switchback

You should verify the switchover, healing, and switchback operations of the MetroCluster configuration.

Refer to References to link to the *MetroCluster Management and Disaster Recovery* content and use the procedures mentioned for negotiated switchover, healing, and switchback.

Overview of the ARL upgrade

Before you upgrade the nodes using ARL, you should understand how the procedure works. In this content, the procedure is broken down into several stages.

Upgrade the node pair

To upgrade the node pair, you need to prepare the original nodes and then perform a series of steps on both the original and new nodes. You can then decommission the original nodes.

ARL upgrade sequence overview

During the procedure, you upgrade the original controller hardware with the replacement controller hardware, one controller at a time, taking advantage of the HA pair configuration to relocate the ownership of non-root aggregates. All non-root aggregates must undergo two relocations to reach their final destination, which is the correct upgraded node.

Each aggregate has a home owner and current owner. The home owner is the actual owner of the aggregate, and the current owner is the temporary owner.

The following table describes the high-level tasks you perform during each stage and the state of aggregate ownership at the end of the stage. Detailed steps are provided later in the procedure:

Stage	Steps
Stage 1. Prepare for upgrade	1. Run prechecks to verify that you can perform the operation. 2. Correct aggregate ownership if a precheck fails. 3. Input the cluster-base license keys. 4. Get an IP address for storage encryption. 5. Manage authentication by using a KMIP server. 6. Manage storage encryption by using an onboard key manager (OKM). 7. Quiesce the SnapMirror relationships (optional). Aggregate ownership at the end of Stage 1: • Node1 is the home owner and current owner of the node1 aggregates. • Node2 is the home owner and current owner of the node2 aggregates.
Stage 2. Relocate and retire node1	1. Relocate non-root aggregates from node1 to node2. 2. Relocate non-SAN data LIFs owned by node1 to node2. 3. Relocate failed or vetoed aggregates. 4. Retire node1. 5. Prepare for netbooting (optional). Aggregate ownership at the end of Stage 2: • Node2 is the current owner of node1 aggregates. • Node2 is the home owner and current owner of node2 aggregates.
Stage 3. Install and boot node3	1. Install and boot node3. 2. Set the FC or (converged network adapter) CNA configuration. 3. Configure the FC ports. 4. Check and configure the UTA/UTA2 ports. 5. Verify node3 is successfully installed. 6. Restore node3 network configuration. 7. Move non-SAN data LIFs owned by node1 from node2 to node3. 8. Relocate non-root aggregates owned by node1 from node2 to node3. Aggregate ownership at the end of Stage 3: • Node3 is the home owner and current owner of node1 aggregates. • Node2 is the home owner and current owner of node2 aggregates.

Stage	Steps
Stage 4. Relocate and retire node2	1. Relocate non-root aggregates from node2 to node3. 2. Relocate non-SAN data LIFs owned by node2 to node3. 3. Retire node2. Aggregate ownership at the end of Stage 4: • Node3 is the home owner and current owner of aggregates that originally belonged to node1. • Node2 is the home owner of node2 aggregates. • Node3 is the current owner of node2 aggregates.
Stage 5. Install and boot node4	1. Install and boot node4. 2. Set the FC or CNA configuration on node4. 3. Configure the FC ports. 4. Check and configure the UTA/UTA2 ports. 5. Verify node4 is successfully installed. 6. Restore node4 network configuration 7. Relocate non-SAN data LIFs owned by node2 from node3 to node4 and verify the SAN LIFs on node4. Aggregate ownership at the end of Stage 5: • Node3 is the home owner and current owner of the aggregates that originally belonged to node1. • Node4 is the home owner and current owner of aggregates that originally belonged to node2.
Stage 6. Complete the upgrade	1. Verify the system is set up correctly. 2. Set up Storage Encryption on the new controller module. 3. Set up NetApp Volume Encryption on the new controller module. 4. Decommission the old system. 5. Resume NetApp SnapMirror operations, if needed.

Stage 1. Prepare for upgrade

Stage 1. Prepare for upgrade

During Stage 1, you must prepare the nodes for the upgrade and run a series of prechecks. You might need to rekey disks for Storage Encryption. You must also prepare to netboot the new controllers.

Steps

1. Prepare the nodes for upgrade
2. Get an IP address of an external key management server for storage encryption

Prepare the nodes for upgrade

You must perform the following steps to prepare the nodes for upgrade.

Steps

1. Begin the controller replacement process by entering the following command in the ONTAP command line:

   `system controller replace start -nodes <node_names>`

   - Beginning with ONTAP 9.10.1, the automated negotiated switchover (NSO) based upgrade procedure is the default for a four-node MetroCluster FC configuration. If you are upgrading a four-node MetroCluster FC configuration, when you issue the `system controller replace start` command, you must prevent the NSO based procedure initiating by setting the `-nso` parameter to `false`:

     `system controller replace start -nodes <node_names> -nso false`

   - The `system controller replace start` command can only be executed at the advanced privilege level:

     `set -privilege advanced`

   You will see the following output:

```
Warning:
1. Current ONTAP version is 9.x
Before starting controller replacement operation, ensure that the new
controllers are running the version 9.x

2. Verify that NVMEM or NVRAM batteries of the new nodes are charged,
and charge them if they are not. You need to physically check the new
nodes to see if the NVMEM or NVRAM  batteries are charged. You can check
the battery status either by connecting to a serial console or using
SSH, logging into the Service Processor (SP) or Baseboard Management
Controller (BMC) for your system, and use the system sensors to see if
the battery has a sufficient charge.

Attention: Do not try to clear the NVRAM contents. If there is a need to
clear the contents of NVRAM, contact NetApp technical support.

3. If a controller was previously part of a different cluster, run
wipeconfig before using it as the replacement controller.

Do you want to continue? {y|n}: y
```

2. Press `y`, you will see the following output:

```
Controller replacement operation: Prechecks in progress.
Controller replacement operation has been paused for user intervention.
```

The system runs the following prechecks; record the output of each precheck for use later in the procedure:

Precheck	Description
Cluster Health Check	Checks all the nodes in the cluster to confirm they are healthy.
MCC Cluster Check	Checks if the system is a MetroCluster configuration. The operation automatically detects if it is a MetroCluster configuration or not and performs the specific prechecks and verification checks. Only 4-node MetroCluster FC configuration is supported. In the case of 2-node MetroCluster configuration and 4-node MetroCluster IP configuration, the check fails. If the MetroCluster configuration is in switched over state, the check fails.
Aggregate Relocation Status Check	Checks whether an aggregate relocation is already in progress. If another aggregate relocation is in progress, the check fails.
Model Name Check	Checks whether the controller models are supported for this procedure. If the models are not supported, the task fails.
Cluster Quorum Check	Checks that the nodes being replaced are in quorum. If the nodes are not in quorum, the task fails.
Image Version Check	Checks that the nodes being replaced run the same version of ONTAP. If the ONTAP image versions are different, the task fails. The new nodes must have the same version of ONTAP 9.x installed on them that is installed on the original nodes. If the new nodes have a different version of ONTAP installed, you need to netboot the new controllers after you install them. For instructions on how to upgrade ONTAP, refer to References to link to *Upgrade ONTAP*.
HA Status Check	Checks if both the nodes being replaced are in a high- availability (HA) pair configuration. If storage failover is not enabled for the controllers, the task fails.
Aggregate Status Check	If the nodes being replaced own aggregates for which they are not the home owner, the task fails. The nodes should not own any non-local aggregates.
Disk Status Check	If any nodes being replaced have missing or failed disks, the task fails. If any disks are missing, refer to References to link to *Disk and aggregate management with the CLI*, *Logical storage management with the CLI*, and *High Availability management* to configure storage for the HA pair.

Precheck	Description
Data LIF Status Check	Checks if any of the nodes being replaced have non- local data LIFs. The nodes should not contain any data LIFs for which they are not the home owner. If one of the nodes contains non-local data LIFs, the task fails.
Cluster LIF Status	Checks whether the cluster LIFs are up for both nodes. If the cluster LIFs are down, the task fails.
ASUP Status Check	If ASUP notifications are not configured, the task fails. You must enable ASUP before beginning the controller replacement procedure.
CPU Utilization Check	Checks if the CPU utilization is more than 50% for any of the nodes being replaced. If the CPU usage is more than 50% for a considerable period of time, the task fails.
Aggregate Reconstruction Check	Checks if reconstruction is occurring on any data aggregates. If aggregate reconstruction is in progress, the task fails.
Node Affinity Job Check	Checks if any node affinity jobs are running. If node affinity jobs are running, the check fails.

3. After the controller replacement operation is started and the prechecks are completed, the operation pauses enabling you to collect output information that you might need later when configuring node3.

   If you have a system with more than two cluster ports per node, such as an FAS8080 or an AFF8080 system, before you start the upgrade, you must migrate and re-home the cluster LIFs to two cluster ports per node. If you perform the controller upgrade with more than two cluster ports per node, cluster LIFs might be missing on the new controller after the upgrade.

4. Run the below set of commands as directed by the controller replacement procedure on the system console.

   You must run and save the output of the following commands individually:

   - `vserver services name-service dns show`
   - `network interface show -curr-node <nodename> -role <cluster,intercluster,node-mgmt,cluster-mgmt,data>`
   - `network port show -node <node_name> -type physical`
   - `service-processor show -node * -instance`
   - `network fcp adapter show -node <node_name>`
   - `network port ifgrp show`
   - `system node show -instance -node <node_name>`
   - `run -node <node_name> sysconfig`
   - `storage aggregate show -node <node_name>`
   - `volume show -node <node_name>`

- storage array config show -switch <switch_name>
- system license show -owner <node_name>
- storage encryption disk show
- security key-manager onboard show-backup
- security key-manager external show
- security key-manager external show-status
- reachability show -detail

If NetApp Volume Encryption using Onboard Key Manager (OKM) is in use, keep the key manager passphrase ready to complete the key manager resync later in the procedure.

Correct aggregate ownership if an ARL precheck fails

If the Aggregate Status Check fails, you must return aggregates owned by the partner node to the home owner node and initiate the precheck process again.

Steps

1. Return the aggregates currently owned by the partner node to the home owner node:

   ```
   storage aggregate relocation start -node <source_node> -destination
   <destination-node> - aggregate-list *
   ```

2. Verify that neither node1 nor node2 still owns aggregates for which it is the current owner (but not the home owner):

   ```
   storage aggregate show -nodes <node_name> -is-home false -fields owner-
   name,home- name,state
   ```

   The following example shows the output of the command when a node is both the current owner and home owner of aggregates:

   ```
   cluster::> storage aggregate show -nodes node1 -is-home true -fields
   owner-name,home-name,state
   aggregate   home-name  owner-name  state
   ---------   ---------  ----------  ------
   aggr1       node1      node1       online
   aggr2       node1      node1       online
   aggr3       node1      node1       online
   aggr4       node1      node1       online

   4 entries were displayed.
   ```

After you finish

You must restart the controller replacement process:

```
system controller replace start -nodes <node_names>
```

License

When you set up a cluster, the setup wizard prompts you to enter the cluster-base license key. However, some features require additional licenses, which are issued as *packages* that include one or more features. Each node in the cluster must have its own key for each feature to be used in the cluster.

If you do not have new license keys, currently licensed features in the cluster are available to the new controller. However, using unlicensed features on the controller might put you out of compliance with your license agreement, so you should install the new license key or keys for the new controller after the upgrade is complete.

Refer to References to link to the *NetApp Support Site* where you can obtain new 2-character license keys for ONTAP. The keys are available in the *My Support* section under *Software licenses*. If the site does not have the license keys you need, you can contact your NetApp sales representative.

For detailed information about licensing, refer to References to link to the *System Administration Reference*.

Get an IP address of an external key management server for storage encryption

After upgrading, you must immediately configure Storage Encryption and establish a cluster-wide authentication key to replace the previous node-level authentication keys.

Steps

1. Install the necessary client and server secure sockets layer (SSL) certificates required to communicate with key management servers:

   ```
   security certificate install
   ```

2. Configure Storage Encryption on all nodes by using the following command on each node:

   ```
   security key-manager external enable
   ```

3. Add the IP address for each key management server:

   ```
   security key-manager external add-servers -key-servers
   <key_management_server_ip_address>
   ```

4. Verify that the same key management servers are configured and available on all nodes in the cluster:

   ```
   security key-manager external show-status
   ```

5. Create a new cluster-wide authentication key:

   ```
   security key-manager key create
   ```

6. Make a note of the new authentication key ID.
7. Rekey all self-encrypting drives with the new authentication key:

   ```
   storage encryption disk modify -disk * -data-key-id <authentication_key_id>
   ```

Manage authentication using KMIP servers

With ONTAP 9.8 or later, you can use Key Management Interoperability Protocol (KMIP) servers to manage authentication keys.

Steps

1. Add a new controller:

   ```
   security key-manager external enable
   ```

2. Add the key manager:

   ```
   security key-manager external add-servers -key-servers
   <key_management_server_ip_address>
   ```

3. Verify that the key management servers are configured and available to all nodes in the cluster:

   ```
   security key-manager external show-status
   ```

4. Restore the authentication keys from all linked key management servers to the new node:

   ```
   security key-manager external restore -node <new_controller_name>
   ```

5. Rekey all self-encrypting disks with the new authentication key:

   ```
   storage encryption disk modify -disk * [-data-key-id nonMSID AK]
   ```

6. If you use the Federal Information Processing Standard (FIPS), rekey all self-encrypting disks with the new authentication key:

   ```
   storage encryption disk modify -disk * [-fips-key-id nonMSID AK]
   ```

Manage storage encryption using Onboard Key Manager

You can use the OKM to manage encryption keys. If you plan to use OKM, you must record the passphrase and backup material before beginning the upgrade.

Steps

1. Save the passphrase to a secure location.
2. Create a backup for recovery purposes. Run the following command and save the output:

   ```
   security key-manager onboard show-backup
   ```

Quiesce the SnapMirror relationships (optional)

Before continuing with the procedure, you must confirm that all the SnapMirror relationships are quiesced. When a SnapMirror relationship is quiesced, it remains quiesced across reboots and failovers.

Steps

1. Verify the SnapMirror relationship status on the destination cluster:

   ```
   snapmirror show
   ```

If the status is "Transferring", you must abort those transfers:
`snapmirror abort -destination-vserver <vserver_name>`

The abort fails if the SnapMirror relationship is not in the "Transferring" state.

2. Quiesce all relationships between the cluster:

```
snapmirror quiesce -destination-vserver <vserver_name>
```

Stage 2. Relocate and retire node1

Stage 2. Relocate and retire node1

During Stage 2, you relocate the node1 aggregates and LIFs to node2, record node1 information, and then retire node1. This process is largely automated; the operation pauses to enable you to check its status. You must manually resume the operation.

Steps

1. Relocate non-root aggregates and NAS data LIFs owned by node1 to node2
2. Relocate failed or vetoed aggregates
3. Retire node1
4. Prepare for netboot

Relocate non-root aggregates and NAS data LIFs owned by node1 to node2

Before you can replace node1 with node3, you must move the non-root aggregates and NAS data LIFs from node1 to node2 before eventually moving node1's resources to node3.

Before you begin

The operation should already be paused when you begin the task; you must manually resume the operation.

About this task

After the aggregates and LIFs are migrated, the operation is paused for verification purposes. At this stage, you must verify whether or not all the non-root aggregates and non-SAN data LIFs are migrated to node3.

The home owner for the aggregates and LIFs is not modified; only the current owner is modified.

Steps

1. Resume the aggregate relocation and NAS data LIF move operations:

```
system controller replace resume
```

All the non-root aggregates and NAS data LIFs are migrated from node1 to node2.

The operation pauses to enable you to verify whether all node1 non-root aggregates and non-SAN data LIFs have been migrated to node2.

2. Check the status of the aggregate relocation and NAS data LIF move operations:

   `system controller replace show-details`

3. With the operation still paused, verify that all the non-root aggregates are online for their state on node2:

   `storage aggregate show -node <node2> -state online -root false`

   The following example shows that the non-root aggregates on node2 are online:

```
cluster::> storage aggregate show -node node2 state online -root false

Aggregate  Size     Available  Used%  State  #Vols  Nodes  RAID Status
---------  -------  ---------  -----  ------ -----  ------
--------------
aggr_1     744.9GB  744.8GB    0%     online     5  node2
raid_dp,normal
aggr_2     825.0GB  825.0GB    0%     online     1  node2
raid_dp,normal
2 entries were displayed.
```

   If the aggregates have gone offline or become foreign on node2, bring them online by using the following command on node2, once for each aggregate:

   `storage aggregate online -aggregate <aggr_name>`

4. Verify that all the volumes are online on node2 by using the following command on node2 and examining its output:

   `volume show -node <node2> -state offline`

   If any volumes are offline on node2, bring them online by using the following command on node2, once for each volume:

   `volume online -vserver <vserver_name> -volume <volume_name>`

   The `<vserver_name>` to use with this command is found in the output of the previous `volume show` command.

5. If any LIFs are down, set the administrative status of the LIFs to `up` by using the following command, once for each LIF:

   `network interface modify -vserver <vserver_name> -lif <LIF_name> -home-node <nodename> - status-admin up`

Relocate failed or vetoed aggregates

If any aggregates fail to relocate or are vetoed, you must manually relocate the aggregates, or if necessary, override either the vetoes or destination checks.

About this task

The relocation operation will have paused due to the error.

Steps

1. Check the event management system (EMS) logs to determine why the aggregate failed to relocate or was vetoed.
2. Relocate any failed or vetoed aggregates:

```
storage aggregate relocation start -node <node1> -destination <node2>
aggregate-list <aggr_name> -ndo-controller-upgrade true
```

3. When prompted, enter `y`.
4. You can force relocation by using one of the following methods:

Option	Description
Overriding veto checks	Use the following command: `storage aggregate relocation start -node node1 -destination node2 -aggregate-list <aggr_list> -ndo -controller-upgrade true -override-vetoes true`
Overriding destination checks	Use the following command: `storage aggregate relocation start -node node1 -destination node2 -aggregate-list <aggr_list> -ndo -controller-upgrade true -override-vetoes true -override-destination-checks true`

Retire node1

To retire node1, you resume the automated operation to disable the HA pair with node2 and shut node1 down correctly. You must later remove node1 from the rack or chassis.

Steps

1. Resume the operation:

```
system controller replace resume
```

2. Verify that node1 has been halted:

```
system controller replace show-details
```

After you finish

You can decommission node1 after the upgrade is completed. See Decommission the old system.

Prepare for netboot

After you physically rack node3 and node4 later in the procedure, you might need to netboot them. The term "netboot" means you are booting from an ONTAP image stored on a remote server. When preparing for netboot, you must put a copy of the ONTAP 9 boot image onto a web server that the system can access.

Before you begin

- Verify that you can access a HTTP server with the system.
- Refer to References to link to the *NetApp Support Site* and download the necessary system files for your platform and the correct version of ONTAP.

About this task

You must netboot the new controllers if they do not have the same version of ONTAP 9 installed on them that is installed on the original controllers. After you install each new controller, you boot the system from the ONTAP 9 image stored on the web server. You can then download the correct files to the boot media device for subsequent system boots.

Steps

1. Access the NetApp Support Site to download the files used for performing the netboot of the system.
2. Download the appropriate ONTAP software from the software download section of the NetApp Support Site and store the `<ontap_version>_image.tgz` file on a web-accessible directory.
3. Change to the web-accessible directory and verify that the files you need are available.

For…	Then…

FAS/AFF8000 series systems	Extract the contents of the `<ontap_version>_image.tgz` file to the target directory:
	`tar -zxvf <ontap_version>_image.tgz`
	
	Note: If you are extracting the contents on Windows, use 7-Zip or WinRAR to extract the netboot image.
	
	Your directory listing should contain a netboot folder with a kernel file:
	`netboot/kernel`

All other systems	Your directory listing should contain the following file: `<ontap_version>_image.tgz` **Note**: You do not need to extract the contents of the `<ontap_version>_image.tgz` file.

You will use the information in the directories in Stage 3.

Stage 3. Install and boot node3

Stage 3. Install and boot node3

During Stage 3, you install and boot node3, check that the cluster and node-management ports from node1 come online on node3, and verify the node3 installation. Non-SAN data LIFs and non-root aggregates belonging to node1 are moved from node2 to node3.

Steps

1. Install and boot node3
2. Set the FC or UTA/UTA2 configuration on node3
3. Verify the node3 installation

4. Restore key-manager configuration on node3
5. Move non-root aggregates and NAS data LIFs owned by node1 from node2 to node3

Install and boot node3

You must install node3 in the rack, transfer node1's connections to node3, boot node3, and install ONTAP. You must then reassign any of node1's spare disks, any disks belonging to the root volume, and any non-root aggregates that were not relocated to node2 earlier in the process, as outlined in this section.

About this task

The relocation operation is paused at the beginning of this stage. This process is largely automated; the operation pauses to enable you to check its status. You must manually resume the operation. In addition, you must verify the SAN LIFs have successfully moved to node3.

You need to netboot node3 if it does not have the same version of ONTAP 9 that is installed on node1. After you install node3, boot it from the ONTAP 9 image stored on the web server. You can then download the correct files to the boot media device for subsequent system boots, by following the instructions in Prepare for netboot.

Important:

- If you are upgrading a V-Series system connected to storage arrays or a system with FlexArray Virtualization software that is connected to storage arrays, you need to complete Step 1 through Step 21, then leave this section and follow instructions in the Configure FC ports on node3 and Check and configure UTA/UTA2 ports on node3 sections as needed, entering commands in Maintenance mode. You must then return to this section and resume with Step 23.
- If you are upgrading a system with storage disks, you need to complete this entire section and then go to the Configure FC ports on node3 and Check and configure UTA/UTA2 ports on node3 sections, entering commands at the cluster prompt.

Steps

1. Make sure that you have rack space for node3.

   If node1 and node2 were in separate chassis, you can put node3 in the same rack location as node1. However, if node1 was in the same chassis with node2, then you need to put node3 into its own rack space, preferably close to the location of node1.

2. Install node3 in the rack, following the *Installation and Setup Instructions* for your node model.

   If you are upgrading to a system with both nodes in the same chassis, install node4 in the chassis as well as node3. If you do not, when you boot node3, the node will behave as if it were in a dual-chassis configuration, and when you boot node4, the interconnect between the nodes will not come up.

3. Cable node3, moving the connections from node1 to node3.

   Cable the following connections, using the *Installation and Setup Instructions* or the *FlexArray Virtualization Installation Requirements and Reference* for the node3 platform, the appropriate disk shelf document, and *High Availability management*.

   Refer to References to link to the *FlexArray Virtualization Installation Requirements and Reference* and *High Availability management*.

- Console (remote management port)
- Cluster ports
- Data ports
- Cluster and node management ports
- Storage
- SAN configurations: iSCSI Ethernet and FC switch ports

> You might not need to move the interconnect card or the cluster interconnect cable connection from node1 to node3 because most platform models have a unique interconnect card model.
> For the MetroCluster configuration, you need to move the FC-VI cable connections from node1 to node3. If the new host does not have an FC-VI card, you might need to move the FC-VI card.

4. Turn on the power to node3, and then interrupt the boot process by pressing Ctrl-C at the console terminal to access the boot environment prompt.

   If you are upgrading to a system with both nodes in the same chassis, node4 also reboots. However, you can disregard the node4 boot until later.

   > When you boot node3, you might see the following warning message:

   ```
   WARNING: The battery is unfit to retain data during a power outage. This
   is likely because the battery is discharged but could be due to other
   temporary conditions.
   When the battery is ready, the boot process will complete and services
   will be engaged.
   To override this delay, press 'c' followed by 'Enter'
   ```

5. If you see the warning message in Step 4, take the following actions:
   a. Check for any console messages that might indicate a problem other than a low NVRAM battery, and, if necessary, take any required corrective action.
   b. Allow the battery to charge and the boot process to complete.

      > **Attention: Do not override the delay; failure to allow the battery to charge could result in a loss of data.**

      > Refer to Prepare for netboot.

6. Configure the netboot connection by choosing one of the following actions.

   > You must use the management port and IP as the netboot connection. Do not use a data LIF IP or a data outage might occur while the upgrade is being performed.

If Dynamic Host Configuration Protocol (DHCP) is…	Then…
Running	Configure the connection automatically by using the following command at the boot environment prompt: `ifconfig e0M -auto`
Not running	Manually configure the connection by using the following command at the boot environment prompt: `ifconfig e0M -addr=<filer_addr> -mask=<netmask> -gw=<gateway> - dns=<dns_addr> domain=<dns_domain>` `<filer_addr>` is the IP address of the storage system. `<netmask>` is the network mask of the storage system. `<gateway>` is the gateway for the storage system. `<dns_addr>` is the IP address of a name server on your network. This parameter is optional. `<dns_domain>` is the Domain Name Service (DNS) domain name. This parameter is optional. **Note**: Other parameters might be necessary for your interface. Enter `help ifconfig` at the firmware prompt for details.

7. Perform netboot on node3:

For…	Then…
FAS/AFF8000 series systems	`netboot http://<web_server_ip/path_to_web-accessible_directory>/netboot/kernel`
All other systems	`netboot http://<web_server_ip/path_to_web-accessible_directory>/<ontap_version>_image.tgz`

The `<path_to_the_web-accessible_directory>` should lead to where you downloaded the `<ontap_version>_image.tgz` in the section Prepare for netboot.

Do not interrupt the boot.

8. From the boot menu, select option `(7) Install new software first`.

This menu option downloads and installs the new ONTAP image to the boot device.

Disregard the following message: `This procedure is not supported for Non-Disruptive Upgrade on an HA pair`. The note applies to nondisruptive upgrades of ONTAP, and not upgrades of controllers.
Always use netboot to update the new node to the desired image. If you use another method to install the image on the new controller, the wrong image might install. This issue applies to all ONTAP releases.

9. If you are prompted to continue the procedure, enter `y`, and when prompted for the package, enter the URL:

```
http://<web_server_ip/path_to_web-
accessible_directory>/<ontap_version>_image.tgz
```

10. Complete the following substeps to reboot the controller module:

    a. Enter `n` to skip the backup recovery when you see the following prompt:

    ```
    Do you want to restore the backup configuration now? {y|n}
    ```

    b. Enter `y` to reboot when you see the following prompt:

    ```
    The node must be rebooted to start using the newly installed software. Do
    you want to reboot now? {y|n}
    ```

    The controller module reboots but stops at the boot menu because the boot device was reformatted, and the configuration data must be restored.

11. Select maintenance mode `5` from the boot menu and enter `y` when you are prompted to continue with the boot.

12. Verify that the controller and chassis are configured as ha:

    ```
    ha-config show
    ```

    The following example shows the output of the `ha-config show` command:

    ```
    Chassis HA configuration: ha
    Controller HA configuration: ha
    ```

    System records in a PROM whether they are in an HA pair or stand-alone configuration. The state must be the same on all components within the stand-alone system or HA pair.

13. If the controller and chassis are not configured as ha, use the following commands to correct the configuration:

    ```
    ha-config modify controller ha

    ha-config modify chassis ha
    ```

    If you have a MetroCluster configuration, use the following commands to modify the controller and chassis:

    ```
    ha-config modify controller mcc

    ha-config modify chassis mcc
    ```

14. Exit maintenance mode:

    ```
    halt
    ```

    Interrupt the autoboot by pressing `Ctrl-C` at the boot environment prompt.

15. On node2, check the system date, time, and time zone:

```
date
```

16. On node3, check the date by using the following command at the boot environment prompt:

```
show date
```

17. If necessary, set the date on node3:

```
set date <mm/dd/yyyy>
```

18. On node3, check the time by using the following command at the boot environment prompt:

```
show time
```

19. If necessary, set the time on node3:

```
set time <hh:mm:ss>
```

20. If necessary, set the partner system ID on node3:

```
setenv partner-sysid <node2_sysid>
```

    a. Save the settings:

```
saveenv
```

21. On the new node, in boot loader, the `partner-sysid` parameter must be set. For node3, `partner-sysid` must be that of node2. Verify the `partner-sysid` for node3:

```
printenv partner-sysid
```

22. Take one of the following actions:

If your system…	Description
Has disks and no back-end storage	Go to Step 23
Is a V-Series system or a system with FlexArray Virtualization software connected to storage arrays	a. Go to section Setting the FC or UTA/UTA2 configuration on node3 and complete the subsections in this section. b. Return to this section and complete the remaining steps, beginning with Step 23. **Important**: You must reconfigure FC onboard ports, CNA onboard ports, and CNA cards before you boot ONTAP on the V-Series or system with FlexArray Virtualization software.

23. Add the FC initiator ports of the new node to the switch zones.

    If your system has a tape SAN, then you need zoning for the initiators. If required, modify the onboard ports to initiator by referring to the Configuring FC ports on node3. See your storage array and zoning documentation for further instructions on zoning.

24. Add the FC initiator ports to the storage array as new hosts, mapping the array LUNs to the new hosts.

    See your storage array and zoning documentation for instructions.

25. Modify the worldwide port name (WWPN) values in the host or volume groups associated with array LUNs on the storage array.

    Installing a new controller module changes the WWPN values associated with each onboard FC port.

26. If your configuration uses switch-based zoning, adjust the zoning to reflect the new WWPN values.

27. If NetApp Storage Encryption (NSE) is in use on this configuration, the `setenv bootarg.storageencryption.support` command must be set to `true`, and the `kmip.init.maxwait` variable must be set to `off` to avoid a boot loop after the node1 configuration is loaded:

    ```
    setenv bootarg.storageencryption.support true

    setenv kmip.init.maxwait off
    ```

28. Boot node into boot menu:

    ```
    boot_ontap menu
    ```

    If you do not have FC or UTA/UTA2 configuration, execute Check and configure UTA/UTA2 ports on node3, Step 15 so that node3 can recognize node1's disks.

29. For a MetroCluster configuration, V-Series systems and systems with FlexArray Virtualization software connected to storage arrays, you must set and configure the FC or UTA/UTA2 ports on node3 to detect the disks attached to the node.
    To complete this task, go to section Set the FC or UTA/UTA2 configuration on node3.

Set the FC or UTA/UTA2 configuration on node3

If node3 has onboard FC ports, onboard unified target adapter (UTA/UTA2) ports, or a UTA/UTA2 card, you must configure the settings before completing the rest of the procedure.

About this task

You might need to complete the section Configure FC ports on node3, the section Check and configure UTA/UTA2 ports on node3, or both sections.

> NetApp marketing materials might use the term UTA2 to refer to converged network adapter (CNA) adapters and ports. However, the CLI uses the term CNA.

- If node3 does not have onboard FC ports, onboard UTA/UTA2 ports, or a UTA/UTA2 card, and you are upgrading a system with storage disks, you can skip to the Verify the node3 installation section.
- However, if you have a V-Series system or a system with FlexArray Virtualization software with storage arrays, and node3 does not have onboard FC ports, onboard UTA/UTA ports, or a UTA/UTA2 card, return to the section *Install and boot node3* and resume the section at Step 23.

Choices

- Configure FC ports on node3
- Check and configure UTA/UTA2 ports on node3

Configure FC ports on node3

If node3 has FC ports, either onboard or on an FC adapter, you must set port configurations on the node before you bring it into service because the ports are not preconfigured. If the ports are not configured, you might experience a disruption in service.

Before you begin

You must have the values of the FC port settings from node1 that you saved in the section Prepare the nodes for upgrade.

About this task

You can skip this section if your system does not have FC configurations. If your system has onboard UTA/UTA2 ports or a UTA/UTA2 card, you configure them in Check and configure UTA/UTA2 ports on node3.

Important: If your system has storage disks, enter the commands in this section at the cluster prompt. If you have a 'V-Series system' or have FlexArray Virtualization Software and are connected to storage arrays, enter commands in this section in Maintenance mode.

1. Compare the FC settings on node3 with the settings that you captured earlier from node1.
2. Take one of the following actions:

If the system that you are upgrading…	Then…

Has storage disks	In maintenance mode (option 5 at boot menu), modify the FC ports on node3 as needed:
	• To program target ports:
	`ucadmin modify -m fc -t target <adapter>`
	• To program initiator ports:
	`ucadmin modify -m fc -t initiator <adapter>`
	`-t` is the FC4 type: target or initiator.

Is a V-Series system or has FlexArray Virtualization Software and is connected to storage arrays	In maintenance mode (option 5 at boot menu), modify the FC ports on node3 as needed: `ucadmin modify -m fc -t initiator -f <adapter_port_name>` `-t` is the FC4 type, target or initiator. **Note**: The FC ports must be programmed as initiators.

3. Take one of the following actions:

If the system that you are upgrading…	Then…
Has storage disks	Verify the new settings by using the following command and examining the output: `ucadmin show`
Is a V-Series system or has FlexArray Virtualization Software and is connected to storage arrays	Verify the new settings by using the following command and examining the output: `ucadmin show`

4. Exit Maintenance mode:

   `halt`

5. Boot the system from loader prompt:

   `boot_ontap menu`

6. After you enter the command, wait until the system stops at the boot environment prompt.
7. Select option `5` from the boot menu for maintenance mode.
8. Take one of the following actions:

If the system that you are upgrading…	Then…
Has storage disks	• If node3 has a UTA/UTA2 card or UTA/UTA2 onboard ports, go to the section Check and configure UTA/UTA2 ports on node3. • If node3 does not have a UTA/UTA2 card or UTA/UTA2 onboard ports, skip the section Check and configure UTA/UTA2 ports on node3 and go to the section Verify the node3 installation.
Is a V-Series system or has FlexArray Virtualization Software and is connected to storage arrays	• If node3 has a UTA/UTA2 card or UTA/UTA2 onboard ports, go to the section Check and configure UTA/UTA2 ports on node3. • If node3 does not have a UTA/UTA2 card or UTA/UTA2 onboard ports, skip the section Check and configure UTA/UTA2 ports on node3 and return to the section *Install and boot node3* and resume at Step 23.

Check and configure UTA/UTA2 ports on node3

If node3 has onboard UTA/UTA2 ports or a UTA/UTA2 card, you must check the configuration of the ports and possibly reconfigure them, depending on how you want to use the upgraded system.

Before you begin

You must have the correct SFP+ modules for the UTA/UTA2 ports.

About this task

If you want to use a Unified Target Adapter (UTA/UTA2) port for FC, you must first verify how the port is configured.

NetApp marketing materials might use the term UTA2 to refer to CNA adapters and ports. However, the CLI uses the term CNA.

You can use the `ucadmin show` command to verify the current port configuration:

```
*> ucadmin show
         Current  Current    Pending   Pending      Admin
Adapter  Mode     Type       Mode      Type         Status
-------  -------  -------    --------  ----------   --------
0e       fc       target     -         initiator    offline
0f       fc       target     -         initiator    offline
0g       fc       target     -         initiator    offline
0h       fc       target     -         initiator    offline
1a       fc       target     -         -            online
1b       fc       target     -         -            online
6 entries were displayed.
```

UTA/UTA2 ports can be configured into native FC mode or UTA/UTA2 mode. FC mode supports FC initiator and FC target; UTA/UTA2 mode allows concurrent NIC and FCoE traffic sharing the same 10GbE SFP+ interface and supports FC targets.

UTA/UTA2 ports might be found on an adapter or on the controller, and have the following configurations, but you should check the configuration of the UTA/UTA2 ports on the node3 and change it, if necessary:

- UTA/UTA2 cards ordered when the controller is ordered are configured before shipment to have the personality you request.
- UTA/UTA2 cards ordered separately from the controller are shipped with the default FC target personality.
- Onboard UTA/UTA2 ports on new controllers are configured before shipment to have the personality you request.

Attention: If your system has storage disks, you enter the commands in this section at the cluster prompt unless directed to enter Maintenance mode. If you have a V- Series system or have FlexArray Virtualization Software and are connected to storage arrays, you enter commands in this section at the Maintenance mode prompt. You must be in Maintenance mode to configure UTA/UTA2 ports.

Steps

1. Check how the ports are currently configured by entering the following command on node3:

If the system…	Then…
Has storage disks	No action required.

If the system…	Then…
Is a V-Series system or has FlexArray Virtualization Software and is connected to storage arrays	`ucadmin show`

The system displays output similar to the following example:

```
*> ucadmin show
          Current  Current     Pending   Pending    Admin
Adapter   Mode     Type        Mode      Type       Status
-------   -------  ---------   -------   --------   ---------
0e        fc       initiator   -         -          online
0f        fc       initiator   -         -          online
0g        cna      target      -         -          online
0h        cna      target      -         -          online
0e        fc       initiator   -         -          online
0f        fc       initiator   -         -          online
0g        cna      target      -         -          online
0h        cna      target      -         -          online
*>
```

2. If the current SFP+ module does not match the desired use, replace it with the correct SFP+ module.

   Contact your NetApp representative to obtain the correct SFP+ module.

3. Examine the output of the `ucadmin show` command and determine whether the UTA/UTA2 ports have the personality you want.
4. Take one of the following actions:

If the UTA/UTA2 ports…	Then…
Do not have the personality that you want	Go to Step 5.
Have the personality that you want	Skip Step 5 through Step 12 and go to Step 13.

5. Take one of the following actions:

If you are configuring…	Then…
Ports on a UTA/UTA2 card	Go to Step 7
Onboard UTA/UTA2 ports	Skip Step 7 and go to Step 8.

6. If the adapter is in initiator mode, and if the UTA/UTA2 port is online, take the UTA/UTA2 port offline:

   `storage disable adapter <adapter_name>`

Adapters in target mode are automatically offline in Maintenance mode.

7. If the current configuration does not match the desired use, change the configuration as needed:

   `ucadmin modify -m fc|cna -t initiator|target <adapter_name>`

   - `-m` is the personality mode, `fc` or `cna`.
   - `-t` is the FC4 type, `target` or `initiator`.

   > You must use FC initiator for tape drives, FlexArray Virtualization systems, and MetroCluster configurations. You must use the FC target for SAN clients.

8. Verify the settings:

   `ucadmin show`

9. Verify the settings:

If the system…	Then…
Has storage disks	`ucadmin show`
Is a V-Series system or has FlexArray Virtualization Software and is connected to storage arrays	`ucadmin show`

   The output in the following examples shows that the FC4 type of adapter "1b" is changing to `initiator` and that the mode of adapters "2a" and "2b" is changing to `cna`:

```
*> ucadmin show
         Current    Current     Pending  Pending     Admin
Adapter  Mode       Type        Mode     Type        Status
-------  --------   ----------  -------  --------    --------
1a       fc         initiator   -        -           online
1b       fc         target      -        initiator   online
2a       fc         target      cna      -           online
2b       fc         target      cna      -           online
*>
```

10. Place any target ports online by entering one of the following commands, once for each port:

If the system…	Then…
Has storage disks	`network fcp adapter modify -node <node_name> -adapter <adapter_name> -state up`

If the system…	Then…
Is a V-Series system or has FlexArray Virtualization Software and is connected to storage arrays	`fcp config <adapter_name> up`

11. Cable the port.

12. Take one of the following actions:

If the system…	Then…
Has storage disks	Go to Verify the node3 installation.
Is a V-Series system or has FlexArray Virtualization Software and is connected to storage arrays	Return to the section *Install and boot node3*, and resume at Step 23.

13. Exit maintenance mode:

```
halt
```

14. Boot node into boot menu by running `boot_ontap menu`. If you are upgrading to an A800, go to Step 23.

15. On node3, go to the boot menu and using 22/7 and select the hidden option `boot_after_controller_replacement`. At the prompt, enter node1 to reassign the disks of node1 to node3, as per the following example.

```
LOADER-A> boot_ontap menu
.
<output truncated>
.
All rights reserved.
*****************************
*                           *
* Press Ctrl-C for Boot Menu. *
*                           *
*****************************
.
<output truncated>
.
Please choose one of the following:
(1)  Normal Boot.
(2)  Boot without /etc/rc.
(3)  Change password.
(4)  Clean configuration and initialize all disks.
(5)  Maintenance mode boot.
(6)  Update flash from backup config.
(7)  Install new software first.
```

```
(8)  Reboot node.
(9)  Configure Advanced Drive Partitioning.
(10) Set Onboard Key Manager recovery secrets.
(11) Configure node for external key management.
Selection (1-11)? 22/7
(22/7) Print this secret List
(25/6) Force boot with multiple filesystem disks missing.
(25/7) Boot w/ disk labels forced to clean.
(29/7) Bypass media errors.
(44/4a) Zero disks if needed and create new flexible root volume.
(44/7) Assign all disks, Initialize all disks as SPARE, write DDR labels
.
<output truncated>
.
(wipeconfig)                          Clean all configuration on boot
device
(boot_after_controller_replacement) Boot after controller upgrade
(boot_after_mcc_transition)         Boot after MCC transition
(9a)                                  Unpartition all disks and remove
their ownership information.
(9b)                                  Clean configuration and initialize
node with partitioned disks.
(9c)                                  Clean configuration and initialize
node with whole disks.
(9d)                                  Reboot the node.
(9e)                                  Return to main boot menu.
The boot device has changed. System configuration information could be
lost. Use option (6) to restore the system configuration, or option (4)
to initialize all disks and setup a new system.
Normal Boot is prohibited.
Please choose one of the following:
(1)  Normal Boot.
(2)  Boot without /etc/rc.
(3)  Change password.
(4)  Clean configuration and initialize all disks.
(5)  Maintenance mode boot.
(6)  Update flash from backup config.
(7)  Install new software first.
(8)  Reboot node.
(9)  Configure Advanced Drive Partitioning.
(10) Set Onboard Key Manager recovery secrets.
(11) Configure node for external key management.
Selection (1-11)? boot_after_controller_replacement
This will replace all flash-based configuration with the last backup to
disks. Are you sure you want to continue?: yes
.
```

```
<output truncated>
.
Controller Replacement: Provide name of the node you would like to
replace:<nodename of the node being replaced>
Changing sysid of node node1 disks.
Fetched sanown old_owner_sysid = 536940063 and calculated old sys id =
536940063
Partner sysid = 4294967295, owner sysid = 536940063
.
<output truncated>
.
varfs_backup_restore: restore using /mroot/etc/varfs.tgz
varfs_backup_restore: attempting to restore /var/kmip to the boot device
varfs_backup_restore: failed to restore /var/kmip to the boot device
varfs_backup_restore: attempting to restore env file to the boot device
varfs_backup_restore: successfully restored env file to the boot device
wrote key file "/tmp/rndc.key"
varfs_backup_restore: timeout waiting for login
varfs_backup_restore: Rebooting to load the new varfs
Terminated
<node reboots>
System rebooting...
.
Restoring env file from boot media...
copy_env_file:scenario = head upgrade
Successfully restored env file from boot media...
Rebooting to load the restored env file...
.
System rebooting...
.
<output truncated>
.
WARNING: System ID mismatch. This usually occurs when replacing a boot
device or NVRAM cards!
Override system ID? {y|n} y
.
Login:
```

In the above console output example, ONTAP will prompt you for the partner node name if the system uses Advanced Disk Partitioning (ADP) disks.

16. If the system goes into a reboot loop with the message `no disks found`, it indicates that the system has reset the FC or UTA/UTA2 ports back to the target mode and therefore is unable to see any disks. To resolve this continue with Step 17 to Step 22, or go to section Verify the node3 installation.

17. Press `Ctrl-C` during autoboot to stop the node at the `LOADER>` prompt.

18. At the loader prompt, enter maintenance mode:

```
boot_ontap maint
```

19. In maintenance mode, display all the previously set initiator ports that are now in target mode:

```
ucadmin show
```

Change the ports back to initiator mode:

```
ucadmin modify -m fc -t initiator -f <adapter name>
```

20. Verify that the ports have been changed to initiator mode:

```
ucadmin show
```

21. Exit maintenance mode:

```
halt
```

22. At the loader prompt boot up:

```
boot_ontap
```

Now, on booting, the node can detect all the disks that were previously assigned to it and can boot up as expected.

23. If you are upgrading from a system with external disks to a system that supports internal and external disks (AFF A800 systems, for example), set the node1 aggregate as the root aggregate to confirm that node3 boots from the root aggregate of node1. To set the root aggregate, go to the boot menu and select option `5` to enter maintenance mode.

You must perform the following substeps in the exact order shown; failure to do so might cause an outage or even data loss.

The following procedure sets node3 to boot from the root aggregate of node1:

a. Enter maintenance mode:

```
boot_ontap maint
```

b. Check the RAID, plex, and checksum information for the node1 aggregate:

```
aggr status -r
```

c. Check the status of the node1 aggregate:

```
aggr status
```

d. If necessary, bring the node1 aggregate online:

```
aggr_online root_aggr_from_<node1>
```

e. Prevent the node3 from booting from its original root aggregate:

```
aggr offline <root_aggr_on_node3>
```

f. Set the node1 root aggregate as the new root aggregate for node3:

```
aggr options aggr_from_<node1> root
```

g. Verify that the root aggregate of node3 is offline and the root aggregate for the disks brought over from node1 is online and set to root:

```
aggr status
```

> Failing to perform the previous substep might cause node3 to boot from the internal root aggregate, or it might cause the system to assume a new cluster configuration exists or prompt you to identify one.

The following shows an example of the command output:

```
-------------------------------------------------------------------
Aggr                  State    Status              Options

aggr0_nst_fas8080_15 online   raid_dp, aggr       root, nosnap=on
                              fast zeroed
                              64-bit

aggr0                 offline  raid_dp, aggr       diskroot
                              fast zeroed
                              64-bit
-------------------------------------------------------------------
```

Verify the node3 installation

You must verify that the physical ports from node1 map correctly to the physical ports on node3. This will enable node3 to communicate with other nodes in the cluster and with the network after the upgrade.

About this task

Refer to References to link to the *Hardware Universe* to capture information about the ports on the new nodes. You will use the information later in this section.

Physical port layout might vary, depending on the model of the nodes. When the new node boots up, ONTAP will try to determine which ports should host cluster LIFs in order to automatically come into quorum.

If the physical ports on node1 do not map directly to the physical ports on node3, the subsequent section Restore network configuration on node3 must be used to repair the network connectivity.

After you install and boot node3, you must verify that it is installed correctly. You must wait for node3 to join quorum and then resume the relocation operation.

At this point in the procedure, the operation will have paused as node3 joins quorum.

Steps

1. Verify that node3 has joined quorum:

   ```
   cluster show -node node3 -fields health
   ```

   The output of the `health` field should be `true`.

2. Verify that node3 is part of the same cluster as node2 and that it is healthy:

   ```
   cluster show
   ```

3. Each cluster LIF must be listening on port 7700. Verify that the cluster LIFs are listening on port 7700:

   ```
   ::> network connections listening show -vserver Cluster
   ```

   Port 7700 listening on cluster ports is the expected outcome as shown in the following example for a two-node cluster:

   ```
   Cluster::> network connections listening show -vserver Cluster
   Vserver Name     Interface Name:Local Port     Protocol/Service
   ---------------- ----------------------------  -------------------
   Node: NodeA
   Cluster          NodeA_clus1:7700               TCP/ctlopcp
   Cluster          NodeA_clus2:7700               TCP/ctlopcp
   Node: NodeB
   Cluster          NodeB_clus1:7700               TCP/ctlopcp
   Cluster          NodeB_clus2:7700               TCP/ctlopcp
   4 entries were displayed.
   ```

4. If necessary, for each cluster LIF that is not listening on port 7700, set the administrative status of the LIF to `down` and then `up`:

   ```
   ::> net int modify -vserver Cluster -lif <cluster-lif> -status-admin down; net
   int modify -vserver Cluster -lif <cluster-lif> -status-admin up
   ```

   Repeat Step 3 to verify that the cluster LIF is now listening on port 7700.

5. Switch to advanced privilege mode:

   ```
   set advanced
   ```

6. Check the status of the controller replacement operation and verify that it is in a paused state and in the same state that it was in before node1 was halted to perform the physical tasks of installing new controllers and moving cables:

   ```
   system controller replace show

   system controller replace show-details
   ```

7. If you are working on a MetroCluster system, verify that the replaced controller is configured correctly for the MetroCluster configuration; the MetroCluster configuration should be in a healthy state. See Verify the health of the MetroCluster configuration.

   Reconfigure the intercluster LIFs on MetroCluster node node3, and check cluster peering to restore communication between the MetroCluster nodes before proceeding to Step 6.

   Check the MetroCluster node status:

   ```
   metrocluster node show
   ```

8. Resume the controller replacement operation:

   ```
   system controller replace resume
   ```

9. Controller replacement will pause for intervention with the following message:

   ```
   Cluster::*> system controller replace show
   Node             Status                       Error-Action
   ---------------- ------------------------
   -----------------------------------
   Node1(now node3) Paused-for-intervention      Follow the instructions
   given in
                                                Step Details
   Node2                      None

   Step Details:
   ---------------------------------------------
   To complete the Network Reachability task, the ONTAP network
   configuration must be manually adjusted to match the new physical
   network configuration of the hardware. This includes:

   1. Re-create the interface group, if needed, before restoring VLANs. For
   detailed commands and instructions, refer to the "Re-creating VLANs,
   ifgrps, and broadcast domains" section of the upgrade controller
   hardware guide for the ONTAP version running on the new controllers.
   2. Run the command "cluster controller-replacement network displaced-
   vlans show" to check if any VLAN is displaced.
   3. If any VLAN is displaced, run the command "cluster controller-
   replacement network displaced-vlans restore" to restore the VLAN on the
   desired port.

   2 entries were displayed.
   ```

   In this procedure, the section *Re-creating VLANs, ifgrps, and broadcast domains* has been renamed *Restore network configuration on node3*.

10. With the controller replacement in a paused state, proceed to the next section of this document to restore

network configuration on the node.

Restore network configuration on node3

After you confirm that node3 is in quorum and can communicate with node2, verify that node1's VLANs, interface groups, and broadcast domains are seen on node3. Also, verify that all node3 network ports are configured in their correct broadcast domains.

About this task

For more information on creating and re-creating VLANs, interface groups, and broadcast domains, refer to References to link to *Network Management*.

Steps

1. List all the physical ports that are on upgraded node1 (referred to as node3):

   ```
   network port show -node node3
   ```

   All physical network ports, VLAN ports and interface group ports on the node are displayed. From this output, you can see any physical ports that have been moved into the `Cluster` broadcast domain by ONTAP. You can use this output to aid in deciding which ports must be used as interface group member ports, VLAN base ports or standalone physical ports for hosting LIFs.

2. List the broadcast domains on the cluster:

   ```
   broadcast-domain show
   ```

3. List the network port reachability of all ports on node3:

   ```
   network port reachability show
   ```

   You should see output like the following example:

```
clusterA::*> reachability show -node node1_node3
(network port reachability show)
Node         Port       Expected Reachability   Reachability Status
-----------  ---------  ----------------------  ----------------------
node1_node3
             a0a        Default:Default         no-reachability
             a0a-822    Default:822             no-reachability
             a0a-823    Default:823             no-reachability
             e0M        Default:Mgmt            ok
             e0a        Cluster:Cluster         misconfigured-
reachability
             e0b        Cluster:Cluster         no-reachability
             e0c        Cluster:Cluster         no-reachability
             e0d        Cluster:Cluster         no-reachability
             e0e        Cluster:Cluster         ok
             e0e-822    -                       no-reachability
             e0e-823    -                       no-reachability
             e0f        Default:Default         no-reachability
             e0f-822    Default:822             no-reachability
             e0f-823    Default:823             no-reachability
             e0g        Default:Default         misconfigured-
reachability
             e0h        Default:Default         ok
             e0h-822    Default:822             ok
             e0h-823    Default:823             ok
18 entries were displayed.
```

In the preceding example, node1_node3 is just booted after controller replacement. Some ports do not have reachability to their expected broadcast domains and must be repaired.

4. Repair the reachability for each of the ports on node3 with a reachability status other than `ok`. Run the following command, first on any physical ports, then on any VLAN ports, one at a time:

   `network port reachability repair -node <node_name> -port <port_name>`

   You should see output like the following example:

```
Cluster ::> reachability repair -node node1_node3 -port e0h
```

```
Warning: Repairing port "node1_node3: e0h" may cause it to move into a
different broadcast domain, which can cause LIFs to be re-homed away
from the port. Are you sure you want to continue? {y|n}:
```

   A warning message, as shown above, is expected for ports with a reachability status that might be different

from the reachability status of the broadcast domain where it is currently located. Review the connectivity of the port and answer `y` or `n` as appropriate.

Verify that all physical ports have their expected reachability:

```
network port reachability show
```

As the reachability repair is performed, ONTAP attempts to place the ports in the correct broadcast domains. However, if a port's reachability cannot be determined and does not belong to any of the existing broadcast domains, ONTAP will create new broadcast domains for these ports.

5. If interface group configuration does not match the new controller physical port layout, modify it by using the following steps.
   a. You must first remove physical ports that should be interface group member ports from their broadcast domain membership. You can do this by using the following command:

      ```
      network port broadcast-domain remove-ports -broadcast-domain <broadcast-domain_name> -ports <node_name:port_name>
      ```

   b. Add a member port to an interface group:

      ```
      network port ifgrp add-port -node <node_name> - ifgrp <ifgrp> -port <port_name>
      ```

   c. The interface group is automatically added to the broadcast domain about a minute after the first member port is added.
   d. Verify that the interface group was added to the appropriate broadcast domain:

      ```
      network port reachability show -node <node_name> -port <ifgrp>
      ```

      If the interface group's reachability status is not `ok`, assign it to the appropriate broadcast domain:

      ```
      network port broadcast-domain add-ports -broadcast-domain <broadcast_domain_name> -ports <node:port>
      ```

6. Assign appropriate physical ports to the `Cluster` broadcast domain by using the following steps:
   a. Determine which ports have reachability to the `Cluster` broadcast domain :

      ```
      network port reachability show -reachable-broadcast-domains Cluster:Cluster
      ```

   b. Repair any port with reachability to the `Cluster` broadcast domain, if its reachability status is not `ok`:

      ```
      network port reachability repair -node <node_name> -port <port_name>
      ```

7. Move the remaining physical ports into their correct broadcast domains by using one of the following commands:

   ```
   network port reachability repair -node <node_name> -port <port_name>

   network port broadcast-domain remove-port

   network port broadcast-domain add-port
   ```

Verify that there are no unreachable or unexpected ports present. Check the reachability status for all physical ports by using the following command and examining the output to confirm the status is `ok`:

```
network port reachability show -detail
```

8. Restore any VLANs that might have become displaced by using the following steps:
   a. List displaced VLANs:

      ```
      displaced- vlans show
      ```

      Output like the following should display:

      ```
      Cluster::*> displaced-vlans show
      (cluster controller-replacement network displaced-vlans show)
                Original
      Node      Base Port   VLANs
      --------  ----------  ----------------------------------------
      Node1       a0a       822, 823
                  e0e       822, 823
      2 entries were displayed.
      ```

   b. Restore VLANs that were displaced from their previous base ports:

      ```
      displaced- vlans restore
      ```

      The following is an example of restoring VLANs that have been displaced from interface group "a0a" back onto the same interface group:

      ```
      Cluster::*> displaced-vlans restore -node node1_node3 -port a0a
      -destination-port a0a
      ```

      The following is an example of restoring displaced VLANs on port "e0e" to' e0h':

      ```
      Cluster::*> displaced-vlans restore -node node1_node3 -port e0e
      -destination-port e0h
      ```

      When a VLAN restore is successful, the displaced VLANs are created on the specified destination port. The VLAN restore fails if the destination port is a member of an interface group, or if the destination port is down.

      Wait about one minute for newly restored VLANs to be placed into their appropriate broadcast domains.

   c. Create new VLAN ports as needed for VLAN ports that are not in the `displaced- vlans show` output but should be configured on other physical ports.
9. Delete any empty broadcast domains after all port repairs have been completed:

```
broadcast-domain delete -broadcast-domain <broadcast_domain_name>
```

10. Verify port reachability:

    ```
    network port reachability show
    ```

    When all ports are correctly configured and added to the correct broadcast domains, the `network port reachability show` command should report the reachability status as `ok` for all connected ports, and the status as `no-reachability` for ports with no physical connectivity. If any port reports a status other than these two, perform the reachability repair and add or remove ports from their broadcast domains as instructed in Step 4.

11. Verify that all ports have been placed into broadcast domains:

    ```
    network port show
    ```

12. Verify that all ports in the broadcast domains have the correct maximum transmission unit (MTU) configured:

    ```
    network port broadcast-domain show
    ```

13. Restore LIF home ports, specifying the Vserver(s) and LIF(s) home ports, if any, that need to be restored by using the following steps:
    a. List any LIFs that are displaced:

       ```
       displaced-interface show
       ```

    b. Restore LIF home nodes and home ports:

       ```
       displaced-interface restore-home-node -node <node_name> -vserver
       <vserver_name> - lif-name <LIF_name>
       ```

14. Verify that all LIFs have a home port and are administratively up:

    ```
    network interface show -fields home- port,status-admin
    ```

Restore key-manager configuration on node3

If you are using NetApp Volume Encryption (NVE) to encrypt volumes on the system you are upgrading, the encryption configuration must be synchronized to the new nodes. Encrypted volumes are taken offline when ARL is complete for node1 aggregates from node2 to node3.

About this task

Synchronize the encryption configuration to the new nodes by performing the following steps:

Steps

1. Synchronize the encryption configuration for Onboard Key Manager (OKM) by using the following command at the cluster prompt:

   ```
   security key-manager onboard sync
   ```

2. Enter the cluster-wide passphrase for the OKM.

Move non-root aggregates and NAS data LIFs owned by node1 from node2 to node3

After you verify network configuration on node3 and before you relocate aggregates from node2 to node3, you must verify that the NAS data LIFs belonging to node1 that are currently on node2 are relocated from node2 to node3. You must also verify that the SAN LIFs exist on node3.

About this task

Remote LIFs handle traffic to SAN LUNs during the upgrade procedure. Moving SAN LIFs is not necessary for cluster or service health during the upgrade. SAN LIFs are not moved unless they need to be mapped to new ports. You will verify that the LIFs are healthy and located on appropriate ports after you bring node3 online.

Steps

1. Resume the relocation operation:

   ```
   system controller replace resume
   ```

   The system performs the following tasks:

   - Cluster quorum check
   - System ID check
   - Image version check
   - Target platform check
   - Network reachability check

   The operation pauses at this stage in the network reachability check.

2. Resume the relocation operation:

   ```
   system controller replace resume
   ```

   The system performs the following checks:

   - Cluster health check
   - Cluster LIF status check

   After performing these checks, the system relocates the non-root aggregates and NAS data LIFs owned by node1 to the new controller, node3.
   The controller replacement operation pauses after the resource relocation is complete.

3. Check the status of the aggregate relocation and NAS data LIF move operations:

   ```
   system controller replace show-details
   ```

   If the controller replacement procedure is paused, check and correct the error, if any, and then issue `resume` to continue the operation.

4. If necessary, restore and revert any displaced LIFs. List any displaced LIFs:

   ```
   cluster controller-replacement network displaced-interface show
   ```

If any LIFs are displaced, restore the home node back to node3:

```
cluster controller-replacement network displaced-interface restore-home-node
```

5. Resume the operation to prompt the system to perform the required post-checks:

   ```
   system controller replace resume
   ```

   The system performs the following post-checks:

   - Cluster quorum check
   - Cluster health check
   - Aggregates reconstruction check
   - Aggregate status check
   - Disk status check
   - Cluster LIF status check
   - Volume check

Stage 4. Relocate and retire node2

Stage 4. Relocate and retire node2

During Stage 4, all non-root aggregates are relocated from node2 to node3; the non-SAN data LIFs owned by node2 are moved to node3. You must record the necessary node2 information and then retire node2.

Steps

1. Relocate non-root aggregates and NAS data LIFs from node2 to node3
2. Retire node2

Relocate non-root aggregates and NAS data LIFs from node2 to node3

Before you can replace node2 with node4, you must relocate the non-root aggregates that are owned by node2 to node3.

Before you begin

After the post-checks from the previous stage complete, the resource release for node2 starts automatically. The non-root aggregates and non-SAN data LIFs are migrated from node2 to node3.

About this task

Remote LIFs handle traffic to SAN LUNs during the upgrade procedure. Moving SAN LIFs is not necessary for cluster or service health during the upgrade.

After the aggregates and LIFs are migrated, the operation is paused for verification purposes. At this stage, you must verify whether or not all the non-root aggregates and non-SAN data LIFs are migrated to node3.

The home owner for the aggregates and LIFs are not modified; only the current owner is modified.

Steps

1. Verify that all the non-root aggregates are online and their state on node3:

   `storage aggregate show -node <node3> -state online -root false`

   The following example shows that the non-root aggregates on node2 are online:

```
cluster::> storage aggregate show -node node3 state online -root false

Aggregate      Size         Available   Used%   State   #Vols  Nodes
RAID     Status
----------     ---------    ---------   ------  -----   -----  ------
-------  ------
aggr_1         744.9GB      744.8GB      0%     online  5      node2
raid_dp  normal
aggr_2         825.0GB      825.0GB      0%     online  1      node2
raid_dp  normal
2 entries were displayed.
```

   If the aggregates have gone offline or become foreign on node3, bring them online by using the following command on node3, once for each aggregate:

   `storage aggregate online -aggregate <aggr_name>`

2. Verify that all the volumes are online on node3 by using the following command on node3 and examining the output:

   `volume show -node <node3> -state offline`

   If any volumes are offline on node3, bring them online by using the following command on node3, once for each volume:

   `volume online -vserver <vserver_name> -volume <volume_name>`

   The `<vserver_name>` to use with this command is found in the output of the previous `volume show` command.

3. Verify that the LIFs have been moved to the correct ports and have a status of `up`. If any LIFs are down, set the administrative status of the LIFs to `up` by entering the following command, once for each LIF:

   `network interface modify -vserver <vserver_name> - lif <LIF_name> -home-node <node_name> - status-admin up`

4. If the ports currently hosting data LIFs will not exist on the new hardware, remove them from the broadcast domain:

   `network port broadcast-domain remove-ports`

5. Verify that there are no data LIFs remaining on node2 by entering the following command and examining the output:

```
network interface show - curr-node <node2> -role data
```

Retire node2

To retire node2, you must shut node2 down correctly and remove it from the rack or chassis.

Steps

1. Resume the operation:

   ```
   system controller replace resume
   ```

   The node halts automatically.

After you finish

You can decommission node2 after the upgrade is completed. See Decommission the old system.

Stage 5. Install and boot node4

Stage 5. Install and boot node4

During Stage 5, you install and boot node4, check that the cluster and node-management ports from node2 come online on node4, and verify the node4 installation. You also move the NAS data LIFs owned by node2 from node3 to node4 and relocate node2's aggregates from node3 to node4.

Steps

1. Install and boot node4
2. Set the FC or UTA/UTA2 configuration on node4
3. Verify the node4 installation
4. Restore key-manager configuration on node4
5. Move non-root aggregates and NAS data LIFs owned by node2 from node3 to node4

Install and boot node4

You must install node4 in the rack, transfer node2's connections to node4, boot node4, and install ONTAP. You must then reassign any of node2's spare disks, any disks belonging to the root volume, and any non-root aggregates that were not relocated to node3 earlier in the process, as outlined in this section.

About this task

The relocation operation is paused at the beginning of this stage. This process is mostly automated; the operation pauses to enable you to check its status. You must manually resume the operation.

You need to netboot node4 if it does not have the same version of ONTAP 9 that is installed on node2. After you install node4, boot it from the ONTAP 9 image stored on the web server. You can then download the correct files to the boot media device for subsequent system boots, by following the instructions in Prepare for netboot.

Important:

- If you are upgrading a V-Series system connected to storage arrays or a system with FlexArray Virtualization software that is connected to storage arrays, you must complete Step 1 through Step 21, then leave this section and follow instructions to Configure FC ports on node4 and to Check and configure UTA/UTA2 ports on node4, entering commands in Maintenance mode. You must then return to this section and resume with Step 23.
- However, if you are upgrading a system with storage disks, you must complete this entire section and then proceed to Set the FC or UTA/UTA2 configuration on node4, entering commands at the cluster prompt.

Steps

1. Make sure that node4 has sufficient rack space.

   If node4 is in a separate chassis from node2, you can put node4 in the same location as node3. If node2 and node4 are in the same chassis, then node4 is already in its appropriate rack location.

2. Install node4 in the rack, following the instructions in the *Installation and Setup Instructions* for the node model.
3. Cable node4, moving the connections from node2 to node4.

   Cable the following connections, using the instructions in the *Installation and Setup Instructions* or the *FlexArray Virtualization Installation Requirements and Reference* for the node4 platform, the appropriate disk shelf document, and *High Availability management*.

   Refer to References to link to the *FlexArray Virtualization Installation Requirements and Reference* and *High Availability management*.

   - Console (remote management port)
   - Cluster ports
   - Data ports
   - Cluster and node management ports
   - Storage
   - SAN configurations: iSCSI Ethernet and FC switch ports

   > You might not need to move the interconnect card/FC-VI card or interconnect/FC-VI cable connection from node2 to node4 because most platform models have unique interconnect card models.
   > For the MetroCluster configuration, you must move the FC-VI cable connections from node2 to node4. If the new host does not have an FC-VI card, you might need to move the FC-VI card.

4. Turn on the power to node4, and then interrupt the boot process by pressing `Ctrl-C` at the console terminal to access the boot environment prompt.

   > When you boot node4, you might see the following warning message:

```
WARNING: The battery is unfit to retain data during a power outage. This
is likely
         because the battery is discharged but could be due to other
temporary
         conditions.
         When the battery is ready, the boot process will complete
         and services will be engaged. To override this delay, press 'c'
followed
         by 'Enter'
```

5. If you see the warning message in Step 4, take the following actions:
   a. Check for any console messages that might indicate a problem other than a low NVRAM battery, and, if necessary, take any required corrective action.
   b. Allow the battery to charge and the boot process to complete.

Attention: Do not override the delay; failure to allow the battery to charge could result in a loss of data.

Refer to Prepare for netboot.

6. Configure the netboot connection by choosing one of the following actions.

You must use the management port and IP as the netboot connection. Do not use a data LIF IP or a data outage might occur while the upgrade is being performed.

If Dynamic Host Configuration Protocol (DHCP) is…	Then…
Running	Configure the connection automatically by using the following command at the boot environment prompt: `ifconfig e0M -auto`

If Dynamic Host Configuration Protocol (DHCP) is…	Then…
Not running	Manually configure the connection by entering the following command at the boot environment prompt: `ifconfig e0M -addr=<filer_addr> -mask=<netmask> -gw=<gateway> - dns=<dns_addr> domain=<dns_domain>` `<filer_addr>` is the IP address of the storage system. `<netmask>` is the network mask of the storage system. `<gateway>` is the gateway for the storage system. `<dns_addr>` is the IP address of a name server on your network. This parameter is optional. `<dns_domain>` is the DNS domain name. This parameter is optional. **Note**: Other parameters might be necessary for your interface. Enter `help ifconfig` at the firmware prompt for details.

7. Perform netboot on node4:

For…	Then…
FAS/AFF8000 series systems	`netboot http://<web_server_ip/path_to_web-accessible_directory>/netboot/kernel`
All other systems	`netboot http://<web_server_ip/path_to_web-accessible_directory>/<ontap_version>_image.tgz`

The `<path_to_the_web-accessible_directory>` should lead to where you downloaded the `<ontap_version>_image.tgz` in Step 1 in the section Prepare for netboot.

Do not interrupt the boot.

8. From the boot menu, select option `(7) Install new software first`.

This menu option downloads and installs the new ONTAP image to the boot device.

Disregard the following message: `This procedure is not supported for Non-Disruptive Upgrade on an HA pair`
The note applies to nondisruptive upgrades of ONTAP, and not upgrades of controllers. Always use netboot to update the new node to the desired image. If you use another method to install the image on the new controller, the wrong image might install. This issue applies to all ONTAP releases.

9. If you are prompted to continue the procedure, enter `y`, and when prompted for the package, enter the URL:

`http://<web_server_ip/path_to_web-accessible_directory>/<ontap_version>_image.tgz`

10. Complete the following substeps to reboot the controller module:
    a. Enter `n` to skip the backup recovery when you see the following prompt:

    ```
    Do you want to restore the backup configuration now? {y|n}
    ```

    b. Reboot by entering `y` when you see the following prompt:

    ```
    The node must be rebooted to start using the newly installed
    software. Do you want to reboot now? {y|n}
    ```

    The controller module reboots but stops at the boot menu because the boot device was reformatted, and the configuration data must be restored.

11. Select maintenance mode `5` from the boot menu and enter `y` when you are prompted to continue with the boot.
12. Verify that the controller and chassis are configured as HA:

    `ha-config show`

    The following example shows the output of the `ha-config show` command:

    ```
    Chassis HA configuration: ha
    Controller HA configuration: ha
    ```

    System records in a PROM whether they are in an HA pair or stand-alone configuration. The state must be the same on all components within the stand-alone system or HA pair.

13. If the controller and chassis are not configured as HA, use the following commands to correct the configuration:

    `ha-config modify controller ha`

    `ha-config modify chassis ha`

    If you have a MetroCluster configuration, use the following commands to modify the controller and chassis:

    `ha-config modify controller mcc`

    `ha-config modify chassis mcc`

14. Exit maintenance mode:

    `halt`

    Interrupt the autoboot by pressing Ctrl-C at the boot environment prompt.

15. On node3, check the system date, time, and time zone:

```
date
```

16. On node4, check the date by using the following command at the boot environment prompt:

```
show date
```

17. If necessary, set the date on node4:

```
set date <mm/dd/yyyy>
```

18. On node4, check the time by using the following command at the boot environment prompt:

```
show time
```

19. If necessary, set the time on node4:

```
set time <hh:mm:ss>
```

20. If necessary, set the partner system ID on node4:

```
setenv partner- sysid <node2_sysid>
```

    a. Save the settings:

```
saveenv
```

21. On the new node, in boot loader, the `partner- sysid` parameter must be set. For node4, `partner-sysid` must be that of node3. Verify the `partner- sysid` for node3:

```
printenv partner- sysid
```

22. Take one of the following actions:

If your system…	Then…
Has disks and no back-end storage	Go to Step 23.
Is a V-Series system or a system with FlexArray Virtualization software connected to storage arrays	a. Go to section Set the FC or UTA/UTA2 configuration on node4 and complete the subsections in this section. b. Return to this section and complete the remaining steps, beginning with Step 23. **Important**: You must reconfigure FC onboard ports, CNA onboard ports, and CNA cards before you boot ONTAP on the V-Series or system with FlexArray Virtualization software.

23. Add the FC initiator ports of the new node to the switch zones.

    If your system has a tape SAN, then you need zoning for the initiators. If required, modify the onboard ports to initiator by referring to the Configure FC ports on node4. See your storage array and zoning

documentation for further instructions on zoning.

24. Add the FC initiator ports to the storage array as new hosts, mapping the array LUNs to the new hosts.

    See your storage array and zoning documentation for instructions.

25. Modify the worldwide port name (WWPN) values in the host or volume groups associated with array LUNs on the storage array.

    Installing a new controller module changes the WWPN values associated with each onboard FC port.

26. If your configuration uses switch-based zoning, adjust the zoning to reflect the new WWPN values.

27. If NetApp Storage Encryption (NSE) is in use on this configuration, the `setenv bootarg.storageencryption.support` command must be set to `true`, and the `kmip.init.maxwait` variable must be set to `off` to avoid a boot loop after the node2 configuration is loaded:

    ```
    setenv bootarg.storageencryption.support true

    setenv kmip.init.maxwait off
    ```

28. Boot node into boot menu:

    ```
    boot_ontap menu
    ```

    If you do not have an FC or UTA/UTA2 configuration, execute Check and configure UTA/UTA2 ports on node4, Step 15 so that node4 can recognize node2's disks.

29. For MetroCluster configuration, V-Series systems and systems with FlexArray Virtualization software connected to storage arrays you must set and configure the FC or UTA/UTA2 ports on node4 to detect the disks attached to the node.
    To complete this task, go to section Set the FC or UTA/UT2 configuration on node4.

Set the FC or UTA/UTA2 configuration on node4

If node4 has onboard FC ports, onboard unified target adapter (UTA/UTA2) ports, or a UTA/UTA2 card, you must configure the settings before completing the rest of the procedure.

About this task

You might need to complete the Configure FC ports on node4 section, the Check and configure UTA/UTA2 ports on node4, or both sections.

> If node4 does not have onboard FC ports, onboard UTA/UTA2 ports, or a UTA/UTA2 card, and you are upgrading a system with storage disks, you can skip to Verify the node4 installation. However, if you have a V-Series system or have FlexArray Virtualization Software and are connected to storage arrays, and node4 does not have onboard FC ports, onboard UTA/ UTA2 ports, or a UTA/UTA2 card, you must return to the section *Install and boot node4* section and resume at Step 22. Make sure that node4 has sufficient rack space. If node4 is in a separate chassis from node2, you can put node4 in the same location as node3. If node2 and node4 are in the same chassis, then node4 is already in its appropriate rack location.

Choices

- Configure FC ports on node4
- Check and configure UTA/UTA2 ports on node4

Configure FC ports on node4

If node4 has FC ports, either onboard or on an FC adapter, you must set port configurations on the node before you bring it into service because the ports are not preconfigured. If the ports are not configured, you might experience a disruption in service.

Before you begin

You must have the values of the FC port settings from node2 that you saved in the section Prepare the nodes for upgrade.

About this task

You can skip this section if your system does not have FC configurations. If your system has onboard UTA/UTA2 ports or a UTA/UTA2 adapter, you configure them in Check and configure UTA/UTA2 ports on node4.

Important: If your system has storage disks, you must enter the commands in this section at the cluster prompt. If you have a V-Series system or a system with FlexArray Virtualization Software connected to storage arrays, you enter commands in this section in Maintenance mode.

Steps

1. Take one of the following actions:

If the system that you are upgrading…	Then…
Has storage disks	`system node hardware unified-connect show`
Is a V-Series system or has FlexArray Virtualization Software and is connected to storage arrays	`ucadmin show`

   The system displays information about all FC and converged network adapters on the system.

2. Compare the FC settings on node4 with the settings that you captured earlier from node1.
3. Take one of the following actions:

If the system that you are upgrading…	Then…

Has storage disks	Modify the FC ports on node4 as needed:
	• To program target ports:
	`ucadmin modify -m fc -t target <adapter>`
	• To program initiator ports:
	`ucadmin modify -m fc -t initiator <adapter>`
	`-t` is the FC4 type: target or initiator.

Is a V-Series system or has FlexArray Virtualization Software and is connected to storage arrays	Modify the FC ports on node4 as needed: `ucadmin modify -m fc -t initiator -f <adapter_port_name>` `-t` is the FC4 type, target or initiator. **Note**: The FC ports must be programmed as initiators.

4. Exit Maintenance mode:

   `halt`

5. Boot the system from loader prompt:

   `boot_ontap menu`

6. After you enter the command, wait until the system stops at the boot environment prompt.
7. Select option `5` from the boot menu for maintenance mode.
8. Take one of the following actions:

If the system that you are upgrading…	Then…
Has storage disks	• Skip this section and go to Verify the node4 installation if node4 does not have a UTA/UTA2 card or UTA/UTA2 onboard ports.
Is a V-Series system or has FlexArray Virtualization Software and is connected to storage arrays	• Go to Check and configure UTA/UTA2 ports on node4 if node4 has a UTA/UTA2 card or UTA/UTA2 onboard ports. • Skip the section *Check and configure UTA/UTA2 ports on node4* if node4 does not have a UTA/UTA2 card or UTA/UTA2 onboard ports, return to the section *Install and boot node4*, and resume at Step 23.

Check and configure UTA/UTA2 ports on node4

If node4 has onboard UTA/UTA2 ports or a UTA/UTA2A card, you must check the configuration of the ports and configure them, depending on how you want to use the upgraded system.

Before you begin

You must have the correct SFP+ modules for the UTA/UTA2 ports.

About this task

UTA/UTA2 ports can be configured into native FC mode or UTA/UTA2A mode. FC mode supports FC initiator and FC target; UTA/UTA2 mode allows concurrent NIC and FCoE traffic to share the same 10GbE SFP+ interface and supports FC target.

NetApp marketing materials might use the term UTA2 to refer to CNA adapters and ports. However, the CLI uses the term CNA.

UTA/UTA2 ports might be on an adapter or on the controller with the following configurations:

- UTA/UTA2 cards ordered at the same time as the controller are configured before shipment to have the personality you requested.
- UTA/UTA2 cards ordered separately from the controller are shipped with the default FC target personality.
- Onboard UTA/UTA2 ports on new controllers are configured (before shipment) to have the personality you requested.

However, you should check the configuration of the UTA/UTA2 ports on node4 and change it, if necessary.

Attention: If your system has storage disks, you enter the commands in this section at the cluster prompt unless directed to enter Maintenance mode. If you have a MetroCluster FC system, V-Series system or a system with FlexArray Virtualization software that is connected to storage arrays, you must be in Maintenance mode to configure UTA/UTA2 ports.

Steps

1. Check how the ports are currently configured by using one of the following commands on node4:

If the system…	Then…
Has storage disks	`system node hardware unified-connect show`
Is a V-Series system or has FlexArray Virtualization Software and is connected to storage arrays	`ucadmin show`

   The system displays output similar to the following example:

```
*> ucadmin show
                Current  Current    Pending   Pending   Admin
Node    Adapter Mode     Type       Mode      Type      Status
----    ------- ---      ---------  -------   --------  -------
f-a     0e      fc       initiator  -          -        online
f-a     0f      fc       initiator  -          -        online
f-a     0g      cna      target     -          -        online
f-a     0h      cna      target     -          -        online
f-a     0e      fc       initiator  -          -        online
f-a     0f      fc       initiator  -          -        online
f-a     0g      cna      target     -          -        online
f-a     0h      cna      target     -          -        online
*>
```

2. If the current SFP+ module does not match the desired use, replace it with the correct SFP+ module.

   Contact your NetApp representative to obtain the correct SFP+ module.

3. Examine the output of the `ucadmin show` command and determine whether the UTA/UTA2 ports have the personality you want.
4. Take one of the following actions:

If the CNA ports…	Then…
Do not have the personality that you want	Go to Step 5.
Have the personality that you want	Skip Step 5 through Step 12 and go to Step 13.

5. Take one of the following actions:

If you are configuring…	Then…
Ports on a UTA/UTA2 card	Go to Step 7
Onboard UTA/UTA2 ports	Skip Step 7 and go to Step 8.

6. If the adapter is in initiator mode, and if the UTA/UTA2 port is online, take the UTA/UTA2 port offline:

   `storage disable adapter <adapter_name>`

   Adapters in target mode are automatically offline in Maintenance mode.

7. If the current configuration does not match the desired use, change the configuration as needed:

   `ucadmin modify -m fc|cna -t initiator|target <adapter_name>`

   - `-m` is the personality mode, FC or 10GbE UTA.
   - `-t` is the FC4 type, `target` or `initiator`.

You must use FC initiator for tape drives, FlexArray Virtualization systems, and MetroCluster configurations. You must use the FC target for SAN clients.

8. Verify the settings by using the following command and examining its output:

```
ucadmin show
```

9. Verify the settings:

If the system…	Then…
Has storage disks	`ucadmin show`
Is a V-Series system or has FlexArray Virtualization Software and is connected to storage arrays	`ucadmin show`

The output in the following examples shows that the FC4 type of adapter "1b" is changing to `initiator` and that the mode of adapters "2a" and "2b" is changing to `cna`:

```
*> ucadmin show
Node  Adapter  Current Mode  Current Type  Pending Mode  Pending Type
Admin Status
----  -------  ------------  ------------  ------------  ------------
------------
f-a   1a       fc             initiator    -             -
online
f-a   1b       fc             target       -             initiator
online
f-a   2a       fc             target       cna           -
online
f-a   2b       fc             target       cna           -
online
4 entries were displayed.
*>
```

10. Place any target ports online by entering one of the following commands, once for each port:

If the system…	Then…
Has storage disks	`network fcp adapter modify -node <node_name> -adapter <adapter_name> -state up`
Is a V-Series system or has FlexArray Virtualization Software and is connected to storage arrays	`fcp config <adapter_name> up`

11. Cable the port.

12. Take one of the following actions:

If the system…	Then…
Has storage disks	Go to Verify the node4 installation.
Is a V-Series system or has FlexArray Virtualization Software and is connected to storage arrays	Return to the section *Install and boot node4*, and resume at Step 23.

13. Exit Maintenance mode:

```
halt
```

14. Boot node into boot menu:

```
boot_ontap menu.
```

If you are upgrading to an A800, go to Step 23

15. On node4, go to the boot menu and using 22/7 and select the hidden option `boot_after_controller_replacement`. At the prompt, enter node2 to reassign the disks of node2 to node4, as per the following example.

```
LOADER-A> boot_ontap menu
.
.
<output truncated>
.
All rights reserved.
*****************************
*                           *
* Press Ctrl-C for Boot Menu. *
*                           *
*****************************
.
<output truncated>
.
Please choose one of the following:
(1)  Normal Boot.
(2)  Boot without /etc/rc.
(3)  Change password.
(4)  Clean configuration and initialize all disks.
(5)  Maintenance mode boot.
(6)  Update flash from backup config.
(7)  Install new software first.
(8)  Reboot node.
(9)  Configure Advanced Drive Partitioning.
(10) Set Onboard Key Manager recovery secrets.
```

```
(11) Configure node for external key management.
Selection (1-11)? 22/7
(22/7)                          Print this secret List
(25/6)                          Force boot with multiple filesystem
disks missing.
(25/7)                          Boot w/ disk labels forced to clean.
(29/7)                          Bypass media errors.
(44/4a)                         Zero disks if needed and create new
flexible root volume.
(44/7)                          Assign all disks, Initialize all disks
as SPARE, write DDR labels
.
.
<output truncated>
.
.
(wipeconfig)                        Clean all configuration on boot
device
(boot_after_controller_replacement) Boot after controller upgrade
(boot_after_mcc_transition)         Boot after MCC transition
(9a)                                Unpartition all disks and remove
their ownership information.
(9b)                                Clean configuration and initialize
node with partitioned disks.
(9c)                                Clean configuration and initialize
node with whole disks.
(9d)                                Reboot the node.
(9e)                                Return to main boot menu.
The boot device has changed. System configuration information could be
lost. Use option (6) to
restore the system configuration, or option (4) to initialize all disks
and setup a new system.
Normal Boot is prohibited.
Please choose one of the following:
(1)  Normal Boot.
(2)  Boot without /etc/rc.
(3)  Change password.
(4)  Clean configuration and initialize all disks.
(5)  Maintenance mode boot.
(6)  Update flash from backup config.
(7)  Install new software first.
(8)  Reboot node.
(9)  Configure Advanced Drive Partitioning.
(10) Set Onboard Key Manager recovery secrets.
(11) Configure node for external key management.
Selection (1-11)? boot_after_controller_replacement
```

```
This will replace all flash-based configuration with the last backup to
disks. Are you sure
you want to continue?: yes
.
.
<output truncated>
.
.
Controller Replacement: Provide name of the node you would like to
replace:
<nodename of the node being replaced>
Changing sysid of node node2 disks.
Fetched sanown old_owner_sysid = 536940063 and calculated old sys id =
536940063
Partner sysid = 4294967295, owner sysid = 536940063
.
.
<output truncated>
.
.
varfs_backup_restore: restore using /mroot/etc/varfs.tgz
varfs_backup_restore: attempting to restore /var/kmip to the boot device
varfs_backup_restore: failed to restore /var/kmip to the boot device
varfs_backup_restore: attempting to restore env file to the boot device
varfs_backup_restore: successfully restored env file to the boot device
wrote
    key file "/tmp/rndc.key"
varfs_backup_restore: timeout waiting for login
varfs_backup_restore: Rebooting to load the new varfs
Terminated
<node reboots>
System rebooting...
.
.
Restoring env file from boot media...
copy_env_file:scenario = head upgrade
Successfully restored env file from boot media...
Rebooting to load the restored env file...
.
System rebooting...
.
.
.
<output truncated>
.
.
```

```
.
.
WARNING: System ID mismatch. This usually occurs when replacing a
boot device or NVRAM cards!
Override system ID? {y|n} y
.
.
.
.
Login:
```

In the above console output example, ONTAP will prompt you for the partner node name if the system uses Advanced Disk Partitioning (ADP) disks.

16. If the system goes into a reboot loop with the message `no disks found`, it indicates that the system has reset the FC or UTA/UTA2 ports back to the target mode and therefore is unable to see any disks. To resolve this, continue with Step 17 to Step 22 or go to section Verify the node4 installation.
17. Press `Ctrl-C` during autoboot to stop the node at the `LOADER>` prompt.
18. At the loader prompt, enter maintenance mode:

    ```
    boot_ontap maint
    ```

19. In maintenance mode, display all the previously set initiator ports that are now in target mode:

    ```
    ucadmin show
    ```

    Change the ports back to initiator mode:

    ```
    ucadmin modify -m fc -t initiator -f <adapter name>
    ```

20. Verify that the ports have been changed to initiator mode:

    ```
    ucadmin show
    ```

21. Exit maintenance mode:

    ```
    halt
    ```

22. At the loader prompt boot up:

    ```
    boot_ontap
    ```

    Now, on booting, the node can detect all the disks that were previously assigned to it and can boot up as expected.

23. If you are upgrading from a system with external disks to a system that supports internal and external disks (AFF A800 systems, for example), set the node2 aggregate as the root aggregate to ensure node4 boots from the root aggregate of node2. To set the root aggregate, go to the boot menu and select option `5` to enter maintenance mode.

You must perform the following substeps in the exact order shown; failure to do so might cause an outage or even data loss.

The following procedure sets node4 to boot from the root aggregate of node2:

a. Enter maintenance mode:

```
boot_ontap maint
```

b. Check the RAID, plex, and checksum information for the node2 aggregate:

```
aggr status -r
```

c. Check the status of the node2 aggregate:

```
aggr status
```

d. If necessary, bring the node2 aggregate online:

```
aggr_online root_aggr_from_<node2>
```

e. Prevent the node4 from booting from its original root aggregate:

```
aggr offline <root_aggr_on_node4>
```

f. Set the node2 root aggregate as the new root aggregate for node4:

```
aggr options aggr_from_<node2> root
```

g. Verify that the root aggregate of node4 is offline and the root aggregate for the disks brought over from node2 is online and set to root:

```
aggr status
```

Failing to perform the previous substep might cause node4 to boot from the internal root aggregate, or it might cause the system to assume a new cluster configuration exists or prompt you to identify one.

The following shows an example of the command output:

```
------------------------------------------------------------------------
Aggr State                      Status              Options
aggr 0_nst_fas8080_15 online    raid_dp, aggr       root, nosnap=on
                                fast zeroed
                                64-bit
aggr0 offline                   raid_dp, aggr       diskroot
                                fast zeroed`
                                64-bit
------------------------------------------------------------------------
```

Verify the node4 installation

You must verify that the physical ports from node2 map correctly to the physical ports on node4. This will enable node4 to communicate with other nodes in the cluster and with the network after the upgrade.

About this task

Refer to References to link to the *Hardware Universe* to capture information about the ports on the new nodes. You will use the information later in this section.

Physical port layout might vary, depending on the model of the nodes. When the new node boots up, ONTAP will try to determine which ports should host cluster LIFs in order to automatically come into quorum.

If the physical ports on node2 do not map directly to the physical ports on node4, the subsequent section Restore network configuration on node4 must be used to repair network connectivity.

After you install and boot node4, you must verify that it is installed correctly. You must wait for node4 to join quorum and then resume the relocation operation.

At this point in the procedure, the operation will have paused as node4 joins quorum.

Steps

1. Verify that node4 has joined quorum:

   ```
   cluster show -node node4 -fields health
   ```

   The output of the `health` field should be `true`.

2. Verify that node4 is part of the same cluster as node3 and that it is healthy:

   ```
   cluster show
   ```

3. Each cluster LIF must be listening on port 7700. Verify that the cluster LIFs are listening on port 7700:

   ```
   ::> network connections listening show -vserver Cluster
   ```

   Port 7700 listening on cluster ports is the expected outcome as shown in the following example for a two-node cluster:

   ```
   Cluster::> network connections listening show -vserver Cluster
   Vserver Name     Interface Name:Local Port     Protocol/Service
   ---------------- ----------------------------  -------------------
   Node: NodeA
   Cluster          NodeA_clus1:7700               TCP/ctlopcp
   Cluster          NodeA_clus2:7700               TCP/ctlopcp
   Node: NodeB
   Cluster          NodeB_clus1:7700               TCP/ctlopcp
   Cluster          NodeB_clus2:7700               TCP/ctlopcp
   4 entries were displayed.
   ```

4. If necessary, for each cluster LIF that is not listening on port 7700, set the administrative status of the LIF to `down` and then `up`:

   ```
   ::> net int modify -vserver Cluster -lif <cluster-lif> -status-admin down; net
   int modify -vserver Cluster -lif <cluster-lif> -status-admin up
   ```

   Repeat Step 3 to verify that the cluster LIF is now listening on port 7700.

5. Switch to advanced privilege mode:

   ```
   set advanced
   ```

6. Check the status of the controller replacement operation and verify that it is in a paused state and in the same state it was in before node2 was halted to perform the physical tasks of installing new controllers and moving cables:

   ```
   system controller replace show

   system controller replace show-details
   ```

7. If you are working on a MetroCluster system, verify that the replaced controller is configured correctly for the MetroCluster configuration; the MetroCluster configuration should be in a healthy state. Refer to Verify the health of the MetroCluster configuration.

   Reconfigure the intercluster LIFs on MetroCluster node node4, and check cluster peering to restore communication between the MetroCluster nodes before proceeding to Step 6.

   Check the MetroCluster node status:

   ```
   metrocluster node show
   ```

8. Resume the controller replacement operation:

   ```
   system controller replace resume
   ```

9. Controller replacement will pause for intervention with the following message:

```
Cluster::*> system controller replace show
Node             Status                        Error-Action
---------------- ------------------------
-----------------------------------
Node2(now node4) Paused-for-intervention      Follow the instructions
given in
                                               Step Details
Node2

Step Details:
-------------------------------------------
To complete the Network Reachability task, the ONTAP network
configuration must be
manually adjusted to match the new physical network configuration of the
hardware.
This includes:

1. Re-create the interface group, if needed, before restoring VLANs. For
detailed
commands and instructions, refer to the "Re-creating VLANs, ifgrps, and
broadcast
domains" section of the upgrade controller hardware guide for the ONTAP
version
running on the new controllers.
2. Run the command "cluster controller-replacement network displaced-
vlans show"
to check if any VLAN is displaced.
3. If any VLAN is displaced, run the command "cluster controller-
replacement
network displaced-vlans restore" to restore the VLAN on the desired
port.
2 entries were displayed.
```

In this procedure, section *Re-creating VLANs, ifgrps, and broadcast domains* has been renamed *Restoring network configuration on node4*.

10. With the controller replacement in a paused state, proceed to the next section of this document to restore network configuration on the node.

Restore network configuration on node4

After you confirm that node4 is in quorum and can communicate with node3, verify that node2's VLANs, interface groups and broadcast domains are seen on node4. Also, verify that all node4 network ports are configured in their correct broadcast domains.

About this task

For more information on creating and re-creating VLANs, interface groups, and broadcast domains, refer to References to link to *Network Management*.

Steps

1. List all the physical ports that are on upgraded node2 (referred to as node4):

   ```
   network port show -node node4
   ```

   All physical network ports, VLAN ports and interface group ports on the node are displayed. From this output you can see any physical ports that have been moved into the `Cluster` broadcast domain by ONTAP. You can use this output to aid in deciding which ports should be used as interface group member ports, VLAN base ports or standalone physical ports for hosting LIFs.

2. List the broadcast domains on the cluster:

   ```
   broadcast-domain show
   ```

3. List the network port reachability of all ports on node4:

   ```
   network port reachability show
   ```

   The output from the command looks similar to the following example:

```
clusterA::*> reachability show -node node2_node4
  (network port reachability show)
Node         Port       Expected Reachability       Reachability Status
---------    --------  --------------------------
---------------------
node2_node4
             a0a        Default:Default            no-reachability
             a0a-822    Default:822                no-reachability
             a0a-823    Default:823                no-reachability
             e0M        Default:Mgmt               ok
             e0a        Cluster:Cluster            misconfigured-
reachability
             e0b        Cluster:Cluster            no-reachability
             e0c        Cluster:Cluster            no-reachability
             e0d        Cluster:Cluster            no-reachability
             e0e        Cluster:Cluster            ok
             e0e-822    -                          no-reachability
             e0e-823    -                          no-reachability
             e0f        Default:Default            no-reachability
             e0f-822    Default:822                no-reachability
             e0f-823    Default:823                no-reachability
             e0g        Default:Default            misconfigured-
reachability
             e0h        Default:Default            ok
             e0h-822    Default:822                ok
             e0h-823    Default:823                ok
18 entries were displayed.
```

In the above example, node2_node4 is just booted after controller replacement. It has several ports that have no reachability and are pending a reachability scan.

4. Repair the reachability for each of the ports on node4 with a reachability status other than `ok`. Run the following command, first on any physical ports, then on any VLAN ports, one at a time:

   `network port reachability repair -node <node_name> -port <port_name>`

   The output looks like the following example:

```
Cluster ::> reachability repair -node node2_node4 -port e0h
```

```
Warning: Repairing port "node2_node4: e0h" may cause it to move into a
different broadcast domain, which can cause LIFs to be re-homed away
from the port. Are you sure you want to continue? {y|n}:
```

A warning message, as shown above, is expected for ports with a reachability status that might be different from the reachability status of the broadcast domain where it is currently located.

Review the connectivity of the port and answer `y` or `n` as appropriate.

Verify that all physical ports have their expected reachability:

```
network port reachability show
```

As the reachability repair is performed, ONTAP attempts to place the ports in the correct broadcast domains. However, if a port's reachability cannot be determined and does not belong to any of the existing broadcast domains, ONTAP will create new broadcast domains for these ports.

5. If interface group configuration does not match the new controller physical port layout, modify it by using the following steps.
   a. You must first remove physical ports that should be interface group member ports from their broadcast domain membership. You can do this by using the following command:

      ```
      network port broadcast-domain remove-ports -broadcast-domain
      <broadcast_domain_name> -ports <node_name:port_name>
      ```

   b. Add a member port to an interface group:

      ```
      network port ifgrp add-port -node <node_name> - ifgrp <ifgrp> -port
      <port_name>
      ```

   c. The interface group is automatically added to the broadcast domain about a minute after the first member port is added.
   d. Verify that the interface group was added to the appropriate broadcast domain:

      ```
      network port reachability show -node <node_name> -port <ifgrp>
      ```

      If the interface group's reachability status is not `ok`, assign it to the appropriate broadcast domain:

      ```
      network port broadcast-domain add-ports -broadcast-domain
      <broadcast_domain_name> -ports <node:port>
      ```

6. Assign appropriate physical ports to the `Cluster` broadcast domain:
   a. Determine which ports have reachability to the `Cluster` broadcast domain:

      ```
      network port reachability show -reachable-broadcast-domains Cluster:Cluster
      ```

   b. Repair any port with reachability to the `Cluster` broadcast domain, if its reachability status is not `ok`:

      ```
      network port reachability repair -node <node_name> -port <port_name>
      ```

7. Move the remaining physical ports into their correct broadcast domains by using one of the following commands:

   ```
   network port reachability repair -node <node_name> -port <port_name>
   ```

   ```
   network port broadcast-domain remove-port
   ```

`network port broadcast-domain add-port`

Verify that there are no unreachable or unexpected ports present. Check the reachability status for all physical ports by using the following command and examining the output to confirm the status is `ok`:

`network port reachability show -detail`

8. Restore any VLANs that might have become displaced by using the following steps:
   a. List displaced VLANs:

      `displaced-vlans show`

      Output like the following should display:

      ```
      Cluster::*> displaced-vlans show
      (cluster controller-replacement network displaced-vlans show)
                  Original
      Node        Base Port     VLANs
      ---------   ---------
      ------------------------------------------------------
      Node1       a0a           822, 823
                  e0e           822, 823
      ```

   b. Restore VLANs that were displaced from their previous base ports:

      `displaced-vlans restore`

      The following is an example of restoring VLANs that have been displaced from interface group a0a back onto the same interface group:

      ```
      Cluster::*> displaced-vlans restore -node node2_node4 -port a0a
      -destination-port a0a
      ```

      The following is an example of restoring displaced VLANs on port "e0e" to "e0h":

      ```
      Cluster::*> displaced-vlans restore -node node2_node4 -port e0e
      -destination-port e0h
      ```

      When a VLAN restore is successful, the displaced VLANs are created on the specified destination port. The VLAN restore fails if the destination port is a member of an interface group, or if the destination port is down.

      Wait about one minute for newly restored VLANs to be placed into their appropriate broadcast domains.

   c. Create new VLAN ports as needed for VLAN ports that are not in the `displaced-vlans show` output but should be configured on other physical ports.

9. Delete any empty broadcast domains after all port repairs have been completed:

   ```
   broadcast-domain delete -broadcast-domain <broadcast_domain_name>
   ```

10. Verify port reachability:

    ```
    network port reachability show
    ```

    When all ports are correctly configured and added to the correct broadcast domains, the `network port reachability show` command should report the reachability status as `ok` for all connected ports, and the status as `no-reachability` for ports with no physical connectivity. If any ports report a status other than these two, perform the reachability repair and add or remove ports from their broadcast domains as instructed in Step 4.

11. Verify that all ports have been placed into broadcast domains:

    ```
    network port show
    ```

12. Verify that all ports in the broadcast domains have the correct maximum transmission unit (MTU) configured:

    ```
    network port broadcast-domain show
    ```

13. Restore LIF home ports, specifying the Vserver(s) and LIF(s) home ports, if any, that need to be restored:
    a. List any LIFs that are displaced:

       ```
       displaced-interface show
       ```

    b. Restore LIF home ports:

       ```
       displaced-interface restore-home-node -node <node_name> -vserver
       <vserver_name > -lif-name <LIF_name>
       ```

14. Verify that all LIFs have a home port and are administratively up:

    ```
    network interface show -fields home- port,status-admin
    ```

Restore key-manager configuration on node4

If you are using NetApp Volume Encryption (NVE) to encrypt volumes on the system you are upgrading, the encryption configuration must be synchronized to the new nodes. Encrypted volumes are taken offline when ARL is complete for node1 aggregates from node2 to node4.

About this task

Synchronize the encryption configuration to the new nodes by performing the following steps:

Steps

1. Synchronize the encryption configuration for Onboard Key Manager (OKM) by using the following command at the cluster prompt:

   ```
   security key-manager onboard sync
   ```

2. Enter the cluster-wide passphrase for the OKM.

Move non-root aggregates and NAS data LIFs owned by node2 from node3 to node4

After you verify network configuration on node4 and before you relocate aggregates from node3 to node4, you must verify that the NAS data LIFs belonging to node2 that are currently on node3 are relocated from node3 to node4. You must also verify that the SAN LIFs exist on node4.

About this task

Remote LIFs handle traffic to SAN LUNs during the upgrade procedure. Moving SAN LIFs is not necessary for cluster or service health during the upgrade. SAN LIFs are not moved unless they need to be mapped to new ports. You will verify that the LIFs are healthy and located on appropriate ports after you bring node4 online.

Steps

1. Resume the relocation operation:

   ```
   system controller replace resume
   ```

   The system performs the following tasks:

   - Cluster quorum check
   - System ID check
   - Image version check
   - Target platform check
   - Network reachability check

   The operation pauses at this stage in the network reachability check.

2. Resume the relocation operation:

   ```
   system controller replace resume
   ```

   The system performs the following checks:

   - Cluster health check
   - Cluster LIF status check

   After performing these checks, the system relocates the non-root aggregates and NAS data LIFs owned by node2 to the new controller, node4.
   The controller replacement operation pauses after the resource relocation is complete.

3. Check the status of the aggregate relocation and NAS data LIF move operations:

   ```
   system controller replace show-details
   ```

   If the controller replacement procedure is paused, check and correct the error, if any, and then issue `resume` to continue the operation.

4. If necessary, restore and revert any displaced LIFs. List any displaced LIFs:

   ```
   cluster controller-replacement network displaced-interface show
   ```

If any LIFs are displaced, restore the home node back to node4:

```
cluster controller-replacement network displaced-interface restore-home-node
```

5. Resume the operation to prompt the system to perform the required post-checks:

```
system controller replace resume
```

The system performs the following post-checks:

- Cluster quorum check
- Cluster health check
- Aggregates reconstruction check
- Aggregate status check
- Disk status check
- Cluster LIF status check
- Volume check

Stage 6. Complete the upgrade

Stage 6. Complete the upgrade

During stage 6, ensure that the new nodes are set up correctly. If one of the new nodes has a unified target adapter, you must restore any port configurations and might need to change the personality of the adapter. You should also set up Storage Encryption if the new nodes are encryption-enabled. You should also decommission the old nodes.

Steps

1. Ensure that the new controllers are set up correctly
2. Set up Storage Encryption on the new controller module
3. Set up NetApp Encryption on the new controller module
4. Decommission the old system
5. Resume SnapMirror operations

For MetroCluster FC configuration

For MetroCluster FC configuration, you must replace the disaster recovery/failover site nodes as soon as possible. Mismatch in controller models within a MetroCluster is not supported because controller model mismatch can cause disaster recovery mirroring to go offline. Use the command `-skip-metrocluster-check true` option to bypass MetroCluster checks when you are replacing nodes at second site.

Confirm that the new controllers are set up correctly

To confirm correct setup, you must enable the HA pair. You must also verify that node3 and node4 can access each other's storage and that neither owns data LIFs belonging to other nodes on the cluster. In addition, you must confirm that node3 owns node1's aggregates and that node4 owns node2's aggregates, and that the volumes for both nodes are online.

Steps

1. After the post-checks of node2, the storage failover and cluster HA pair for the node2 cluster are enabled. When the operation is done, both nodes show as completed and the system performs some cleanup operations.
2. Verify that storage failover is enabled:

   ```
   storage failover show
   ```

   The following example shows the output of the command when storage failover is enabled:

   ```
   cluster::> storage failover show
                       Takeover
   Node     Partner  Possible   State Description
   -------- -----    -------    ------------------
   node3    node4    true       Connected to node4
   node4    node3    true       Connected to node3
   ```

3. Verify that node3 and node4 belong to the same cluster by using the following command and examining the output:

   ```
   cluster show
   ```

4. Verify that node3 and node4 can access each other's storage by using the following command and examining the output:

   ```
   storage failover show -fields local-missing- disks,partner-missing-disks
   ```

5. Verify that neither node3 nor node4 owns data LIFs home-owned by other nodes in the cluster by using the following command and examining the output:

   ```
   network interface show
   ```

   If neither node3 or node4 owns data LIFs home-owned by other nodes in the cluster, revert the data LIFs to their home owner:

   ```
   network interface revert
   ```

6. Verify that node3 owns the aggregates from node1 and that node4 owns the aggregates from node2:

   ```
   storage aggregate show -owner-name <node3>
   ```

   ```
   storage aggregate show -owner-name <node4>
   ```

7. Determine whether any volumes are offline:

   ```
   volume show -node <node3> -state offline
   ```

   ```
   volume show -node <node4> -state offline
   ```

8. If any volumes are offline, compare them with the list of offline volumes that you captured in the section Prepare the nodes for upgrade, and bring online any of the offline volumes, as required, by using the

following command, once for each volume:

```
volume online -vserver <vserver_name> -volume <volume_name>
```

9. Install new licenses for the new nodes by using the following command for each node:

   ```
   system license add - license-code <license_code,license_code,license_code…>
   ```

   The license-code parameter accepts a list of 28 upper-case alphabetic character keys. You can add one license at a time, or you can add multiple licenses at once, separating each license key by a comma.

10. Remove all of the old licenses from the original nodes by using one of the following commands:

    ```
    system license clean-up -unused -expired

    system license delete -serial-number <node_serial_number> -package
    <licensable_package>
    ```

    - Delete all expired licenses:

      ```
      system license clean-up -expired
      ```

    - Delete all unused licenses:

      ```
      system license clean-up -unused
      ```

    - Delete a specific license from a cluster by using the following commands on the nodes:

      ```
      system license delete -serial-number <node1_serial_number> -package *

      system license delete -serial-number <node2_serial_number> -package *
      ```

    The following output is displayed:

    ```
    Warning: The following licenses will be removed:
    <list of each installed package>
    Do you want to continue? {y|n}: y
    ```

    Enter `y` to remove all of the packages.

11. Verify that the licenses are correctly installed by using the following command and examining the output:

    ```
    system license show
    ```

    You can compare the output with the output that you captured in the section Prepare the nodes for upgrade.

12. If NetApp Storage Encryption (NSE) was in use on the configuration and you set the `setenv bootarg.storageencryption.support` command to `true` with the `<kmip.init.maxwait>` variable `off` (in Install and boot node4, Step 27), you need to reset the variable:

```
set diag; systemshell -node <node_name> -command sudo kenv -u -p
kmip.init.maxwait
```

13. Configure the SPs by using the following command on both nodes:

```
system service-processor network modify -node <node_name>
```

Refer to References to link to the *System Administration Reference* for information about the SPs and the *ONTAP 9.8 Commands: Manual Page Reference* for detailed information about the system `service-processor network modify` command.

14. Take the following actions on one of the new nodes:
    a. Enter advanced privilege level:

```
set -privilege advanced
```

    b. Enter the following command:

```
storage failover modify -node <node_name> - cifs- ndo-duration
default|medium|low
```

    - Enter `medium` if the system will have workloads in which 50% to 75% of the operations will be 4 KB or smaller.
    - Enter `low` if the system will have workloads in which 75% to 100% of the operations will be 4 KB or smaller.

    c. Return to the admin level:

```
set -privilege admin
```

    d. Reboot the system to ensure that the changes take effect.
15. If you want to set up a switchless cluster on the new nodes, refer to References to link to the *NetApp Support Site* and follow the instructions in *Transitioning to a two-node switchless cluster*.

After you finish

If Storage Encryption is enabled on node3 and node4, complete the section Set up Storage Encryption on the new controller module. Otherwise, complete the section Decommission the old system.

Set up Storage Encryption on the new controller module

If the replaced controller or the HA partner of the new controller uses Storage Encryption, you must configure the new controller module for Storage Encryption, including installing SSL certificates and setting up key management servers.

About this task

This procedure includes steps that are performed on the new controller module. You must enter the command on the correct node.

Steps

1. Verify that the key management servers are still available, their status, and their authentication key information:

```
security key-manager external show-status

security key-manager onboard shoecw-backup
```

2. Add the key management servers listed in the previous step to the key management server list in the new controller.
   a. Add the key management server:

      ```
      security key-manager external add-servers -key-servers
      <key_management_server_ip_address>
      ```

   b. Repeat the previous step for each listed key management server. You can link up to four key management servers.
   c. Verify the that the key management servers were added successfully:

      ```
      security key-manager external show
      ```

3. On the new controller module, run the key management setup wizard to set up and install the key management servers.

   You must install the same key management servers that are installed on the existing controller module.

   a. Launch the key management server setup wizard on the new node:

      ```
      security key-manager external enable
      ```

   b. Complete the steps in the wizard to configure key management servers.
4. Restore authentication keys from all linked key management servers to the new node:

   ```
   security key-manager external restore -node <new_controller_name>
   ```

Set up NetApp Volume Encryption on the new controller module

If the replaced controller or high availability (HA) partner of the new controller uses NetApp Volume Encryption (NVE), you must configure the new controller module for NVE.

About this task

This procedure includes steps that are performed on the new controller module. You must enter the command on the correct node.

Steps

1. Verify that the key management servers are still available, their status, and their authentication key information:

   ```
   security key-manager key query -node node
   ```

2. Add the key management servers listed in the previous step to the key management server list in the new controller:
   a. Add the key management server:

```
security key-manager external add-servers -key-servers
<key_management_server_ip_address>
```

b. Repeat the previous step for each listed key management server. You can link up to four key management servers.

c. Verify the that the key management servers were added successfully:

```
security key-manager external show
```

3. On the new controller module, run the key management setup wizard to set up and install the key management servers.

   You must install the same key management servers that are installed on the existing controller module.

   a. Launch the key management server setup wizard on the new node:

   ```
   security key-manager external enable
   ```

   b. Complete the steps in the wizard to configure key management servers.

4. Restore authentication keys from all linked key management servers to the new node:

For…	Use this command…
External key management (EKM)	`security key-manager external restore` This command needs the OKM passphrase
Onboard Key Manager	`security key-manager onboard sync`

After you finish

Check if any volumes were taken offline because authentication keys were not available or EKM servers could not be reached. Bring those volumes back online by using the `volume online` command.

Decommission the old system

After upgrading, you can decommission the old system through the NetApp Support Site. Decommissioning the system tells NetApp that the system is no longer in operation and removes it from support databases.

Steps

1. Refer to References to link to the *NetApp Support Site* and log in.
2. Select **Products > My Products** from the menu.
3. On the **View Installed Systems** page, choose which **Selection Criteria** you want to use to display information about your system.

   You can choose one of the following to locate your system:

   - Serial Number (located on the back of the unit)
   - Serial Numbers for My Location

4. Select **Go!**

A table displays cluster information, including the serial numbers.

5. Locate the cluster in the table and select **Decommission this system** from the Product Tool Set drop-down menu.

Resume SnapMirror operations

You can resume SnapMirror transfers that were quiesced before upgrade and resume the SnapMirror relationships. The updates are on schedule after the upgrade is completed.

Steps

1. Verify the SnapMirror status on the destination:

   ```
   snapmirror show
   ```

2. Resume the SnapMirror relationship:

   ```
   snapmirror resume -destination-vserver <vserver_name>
   ```

Troubleshoot

Troubleshoot

You might encounter a failure while upgrading the node pair. The node might crash, aggregates might not relocate, or LIFs might not migrate. The cause of the failure and its solution depend on when the failure occurred during the upgrade procedure.

Refer to the table describing the different phases of the procedure in the section Overview of the ARL upgrade. Information about the failures that can occur is listed by the phase of the procedure.

Aggregate relocation failures

Aggregate relocation (ARL) might fail at different points during the upgrade.

Check for aggregate relocation failure

During the procedure, ARL might fail in Stage 2, Stage 3, or Stage 5.

Steps

1. Enter the following command and examine the output:

   ```
   storage aggregate relocation show
   ```

   The `storage aggregate relocation show` command shows you which aggregates were successfully relocated and which ones were not, along with the causes of failure.

2. Check the console for any EMS messages.
3. Take one of the following actions:

   - Take the appropriate corrective action, depending on the output of the `storage aggregate relocation show` command and the output of the EMS message.

- Force relocation of the aggregate or aggregates by using the `override-vetoes` option or the `override-destination-checks` option of the `storage aggregate relocation start` command.

For detailed information about the `storage aggregate relocation start`, `override- vetoes`, and `override-destination-checks` options, refer to References to link to the *ONTAP 9.8 Commands: Manual Page Reference*.

Aggregates originally on node1 are owned by node4 after completion of the upgrade

At the end of the upgrade procedure, node3 should be the new home node of aggregates that originally had node1 as the home node. You can relocate them after the upgrade.

About this task

Aggregates might fail to relocate correctly, having node1 as their home node instead of node3 under the following circumstances:

- During Stage 3, when aggregates are relocated from node2 to node3.
  Some of the aggregates being relocated have node1 as their home node. For example, such an aggregate could be called aggr_node_1. If relocation of aggr_node_1 fails during Stage 3, and relocation cannot be forced, then the aggregate will be left behind on node2.
- After Stage 4, when node2 is replaced with node4.
  When node2 is replaced, aggr_node_1 will come online with node4 as its home node instead of node3.

You can fix the incorrect ownership problem after Stage 6 once storage failover has been enabled by completing the following steps:

Steps

1. Enter the following command to get a list of aggregates:

   ```
   storage aggregate show -nodes <node4> -is-home true
   ```

   To identify aggregates that were not correctly relocated, refer to the list of aggregates with the home owner of node1 that you obtained in the section Prepare the nodes for upgrade and compare it with output of the above command.

2. Compare the output of Step 1 with the output you captured for node1 in the section Prepare the nodes for upgrade and note any aggregates that were not correctly relocated.
3. Relocate the aggregates left behind on node4:

   ```
   storage aggregate relocation start -node <node4> -aggr <aggr_node_1>
   -destination <node3>
   ```

   Do not use the `-ndo-controller-upgrade` parameter during this relocation.

4. Verify that node3 is now the home owner of the aggregates:

   ```
   storage aggregate show -aggregate <aggr1,aggr2,aggr3…> -fields home-name
   ```

   `<aggr1,aggr2,aggr3…>` is the list of aggregates that had node1 as the original home owner.

   Aggregates that do not have node3 as home owner can be relocated to node3 using the same relocation command in Step 3.

Reboots, panics, or power cycles

The system might crash – reboot, panic or go through a power cycle – during different stages of the upgrade.

The solution to these problems depends on when they occur.

Reboots, panics, or power cycles during the pre-check phase

Node1 or node2 crashes before the pre-check phase with HA pair still enabled

If either node1 or node2 crashes before the pre-check phase, no aggregates have been relocated yet and the HA pair configuration is still enabled.

About this task

Takeover and giveback can proceed normally.

Steps

1. Check the console for EMS messages that the system might have issued and take the recommended corrective action.
2. Continue with the node-pair upgrade procedure.

Reboots, panics, or power cycles during first resource-release phase

Node1 crashes during the first resource-release phase with HA pair still enabled

Some or all aggregates have been relocated from node1 to node2, and HA pair is still enabled. Node2 takes over node1's root volume and any non-root aggregates that were not relocated.

About this task

Ownership of aggregates that were relocated look the same as the ownership of non-root aggregates that were taken over because the home owner has not changed.

When node1 enters the `waiting for giveback` state, node2 gives back all of the node1 non- root aggregates.

Steps

1. After node1 is booted up, all the non-root aggregates of node1 have moved back to node1. You must perform a manual aggregate relocation of the aggregates from node1 to node2:
   `storage aggregate relocation start -node node1 -destination node2 -aggregate -list * - ndocontroller-upgrade true`
2. Continue with the node-pair upgrade procedure.

Node1 crashes during the first resource-release phase while HA pair is disabled

Node2 does not take over but it is still serving data from all non-root aggregates.

Steps

1. Bring up node1.
2. Continue with the node-pair upgrade procedure.

Node2 fails during the first resource-release phase with HA pair still enabled

Node1 has relocated some or all of its aggregates to node2. The HA pair is enabled.

About this task

Node1 takes over all of node2's aggregates as well as any of its own aggregates that it had relocated to node2. When node2 boots up, the aggregate relocation is completed automatically.

Steps

1. Bring up node2.
2. Continue with the node-pair upgrade procedure.

Node2 crashes during the first resource-release phase and after HA pair is disabled

Node1 does not take over.

Steps

1. Bring up node2.

   A client outage occurs for all aggregates while node2 is booting up.

2. Continue with the rest of the node-pair upgrade procedure.

Reboots, panics, or power cycles during the first verification phase

Node2 crashes during the first verification phase with HA pair disabled

Node3 does not take over following a node2 crash as the HA pair is already disabled.

Steps

1. Bring up node2.

   A client outage occurs for all aggregates while node2 is booting up.

2. Continue with the node-pair upgrade procedure.

Node3 crashes during the first verification phase with HA pair disabled

Node2 does not take over but it is still serving data from all non-root aggregates.

Steps

1. Bring up node3.
2. Continue with the node-pair upgrade procedure.

Reboots, panics, or power cycles during first resource-regain phase

Node2 crashes during the first resource-regain phase during aggregate relocation

Node2 has relocated some or all of its aggregates from node1 to node3. Node3 serves data from aggregates that were relocated. The HA pair is disabled and hence there is no takeover.

About this task

There is client outage for aggregates that were not relocated. On booting up node2, the aggregates of node1

are relocated to node3.

Steps

1. Bring up node2.
2. Continue with the node-pair upgrade procedure.

Node3 crashes during the first resource-regain phase during aggregate relocation

If node3 crashes while node2 is relocating aggregates to node3, the task continues after node3 boots up.

About this task

Node2 continues to serve remaining aggregates, but aggregates that were already relocated to node3 encounter client outage while node3 is booting up.

Steps

1. Bring up node3.
2. Continue with the controller upgrade.

Reboots, panics, or power cycles during post-check phase

Node2 or node3 crashes during the post-check phase

The HA pair is disabled hence this is no takeover. There is a client outage for aggregates belonging to the node that rebooted.

Steps

1. Bring up the node.
2. Continue with the node-pair upgrade procedure.

Reboots, panics, or power cycles during second resource-release phase

Node3 crashes during the second resource-release phase

If node3 crashes while node2 is relocating aggregates, the task continues after node3 boots up.

About this task

Node2 continues to serve remaining aggregates but aggregates that were already relocated to node3 and node3's own aggregates encounter client outages while node3 is booting.

Steps

1. Bring up node3.
2. Continue with the controller upgrade procedure.

Node2 crashes during the second resource-release phase

If node2 crashes during aggregate relocation, node2 is not taken over.

About this task

Node3 continues to serve the aggregates that have been relocated, but the aggregates owned by node2 encounter client outages.

Steps

1. Bring up node2.
2. Continue with the controller upgrade procedure.

Reboots, panics, or power cycles during the second verification phase

Node3 crashes during the second verification phase

If node3 crashes during this phase, takeover does not happen because the HA pair is already disabled.

About this task

There is a client outage for all aggregates until node3 reboots.

Steps

1. Bring up node3.
2. Continue with the node-pair upgrade procedure.

Node4 crashes during the second verification phase

If node4 crashes during this phase, takeover does not happen. Node3 serves data from the aggregates.

About this task

There is an outage for non-root aggregates that were already relocated until node4 reboots.

Steps

1. Bring up node4.
2. Continue with the node-pair upgrade procedure.

Issues that can arise in multiple stages of the procedure

Some issues can occur during different stages of the procedure.

Unexpected "storage failover show" command output

During the procedure, if the node that hosts all data aggregates panics or is rebooted accidentally, you might see unexpected output for the `storage failover show` command before and after the reboot, panic, or power cycle.

About this task

You might see unexpected output from the `storage failover show` command in Stage 2, Stage 3, Stage 4, or Stage 5.

The following example shows the expected output of the `storage failover show` command if there are no reboots or panics on the node that hosts all the data aggregates:

```
cluster::> storage failover show

                    Takeover
Node     Partner    Possible  State Description
-------  --------   --------- -----------------
node1    node2      false     Unknown
node2    node1      false     Node owns partner aggregates as part of the
non-disruptive head upgrade procedure. Takeover is not possible: Storage
failover is disabled.
```

The following example shows the output of the `storage failover show` command after a reboot or panic:

```
cluster::> storage failover show

                    Takeover
Node     Partner    Possible  State Description
-------  --------   --------- -----------------
node1    node2      -         Unknown
node2    node1      false     Waiting for node1, Partial giveback, Takeover
is not possible: Storage failover is disabled
```

Although the output says that a node is in partial giveback and that storage failover is disabled, you can disregard this message.

Steps

No action is required; continue with the node-pair upgrade procedure.

LIF migration failure

After you migrate LIFs, they might not come online after migration in Stage 2, Stage 3, or Stage 5.

Steps

1. Verify that the port MTU size is the same as that of the source node.

   For example, if the cluster port MTU size is 9000 on the source node, it should be 9000 on the destination node.

2. Check the physical connectivity of the network cable if the physical state of the port is `down`.

References

When performing the procedures in this content, you might need to consult reference content or go to reference websites.

- Reference content

- Reference sites

Reference content

Content specific to this upgrade are listed in the table below.

Content	Description
Administration overview with the CLI	Describes how to administer ONTAP systems, shows you how to use the CLI interface, how to access the cluster, how to manage nodes, and much more.
Decide whether to use System Manager or the ONTAP CLI for cluster setup	Describes how to set up and configure ONTAP.
Disk and aggregate management with the CLI	Describes how to manage ONTAP physical storage using the CLI. It shows you how to create, expand, and manage aggregates, how to work with Flash Pool aggregates, how to manage disks, and how to manage RAID policies.
Fabric-attached MetroCluster Installation and Configuration	Describes how to install and configure the MetroCluster hardware and software components in a fabric configuration.
FlexArray Virtualization Installation Requirements and Reference	Contains cabling instructions and other information for FlexArray Virtualization systems.
High Availability management	Describes how to install and manage high-availability clustered configurations, including storage failover and takeover/giveback.
Logical storage management with the CLI	Describes how to efficiently manage your logical storage resources, using volumes, FlexClone volumes, files, and LUNs, FlexCache volumes, deduplication, compression, qtrees, and quotas.
MetroCluster Management and Disaster Recovery	Describes how to perform MetroCluster switchover and switchback operations, both in planned maintenance operations, or in the event of a disaster.
MetroCluster Upgrade and Expansion	Provides procedures for upgrading controller and storage models in the MetroCluster configuration, transitioning from a MetroCluster FC to a MetroCluster IP configuration, and expanding the MetroCluster configuration by adding additional nodes.
Network Management	Describes how to configure and manage physical and virtual network ports (VLANs and interface groups), LIFs, routing, and host-resolution services in clusters; optimize network traffic by load balancing; and monitor the cluster by using SNMP.
ONTAP 9.0 Commands: Manual Page Reference	Describes syntax and usage of supported ONTAP 9.0 commands.
ONTAP 9.1 Commands: Manual Page Reference	Describes syntax and usage of supported ONTAP 9.1 commands.
ONTAP 9.2 Commands: Manual Page Reference	Describes syntax and usage of supported ONTAP 9.2 commands.
ONTAP 9.3 Commands: Manual Page Reference	Describes syntax and usage of supported ONTAP 9.3 commands.

Content	Description
ONTAP 9.4 Commands: Manual Page Reference	Describes syntax and usage of supported ONTAP 9.4 commands.
ONTAP 9.5 Commands: Manual Page Reference	Describes syntax and usage of supported ONTAP 9.5 commands.
ONTAP 9.6 Commands: Manual Page Reference	Describes syntax and usage of supported ONTAP 9.6 commands.
ONTAP 9.7 Commands: Manual Page Reference	Describes syntax and usage of supported ONTAP 9.7 commands.
ONTAP 9.8 Commands: Manual Page Reference	Describes syntax and usage of supported ONTAP 9.8 commands.
ONTAP 9.9.1 Commands: Manual Page Reference	Describes syntax and usage of supported ONTAP 9.9.1 commands.
ONTAP 9.10.1 Commands: Manual Page Reference	Describes syntax and usage of supported ONTAP 9.10.1 commands.
SAN management with the CLI	Describes how to configure and manage LUNs, igroups, and targets using the iSCSI and FC protocols, and namespaces and subsystems using the NVMe/FC protocol.
SAN configuration reference	Contains information about FC and iSCSI topologies and wiring schemes.
Upgrade by moving volumes or storage	Describes how to quickly upgrade controller hardware in a cluster by moving storage or volumes. Also describes how to convert a supported model to a disk shelf.
Upgrade ONTAP	Contains instructions for downloading and upgrading ONTAP.
Use "system controller replace" commands to upgrade AFF A700 to AFF A900 running ONTAP 9.10.1 or later	Describes the aggregate relocation procedures needed to non-disruptively upgrade an AFF A700 to an AFF A900 running ONTAP 9.10.1 or later by using "system controller replace" commands.
Use "system controller replace" commands to upgrade controller hardware running ONTAP 9.8 or later	Describes the aggregate relocation procedures needed to non-disruptively upgrade controllers running ONTAP 9.8 by using "system controller replace" commands.
Use aggregate relocation to manually upgrade controller hardware running ONTAP 9.8 or later	Describes the aggregate relocation procedures needed to perform manual non-disruptive controller upgrades running ONTAP 9.8 or later.
Use "system controller replace" commands to upgrade controller hardware running ONTAP 9.5 to ONTAP 9.7	Describes the aggregate relocation procedures needed to non-disruptively upgrade controllers running ONTAP 9.5 to ONTAP 9.7 by using "system controller replace" commands.
Use aggregate relocation to manually upgrade controller hardware running ONTAP 9.7 or earlier	Describes the aggregate relocation procedures needed to perform manual non-disruptive controller upgrades running ONTAP 9.7 or earlier.

Reference sites

The NetApp Support Site also contains documentation about network interface cards (NICs) and other

hardware that you might use with your system. It also contains the Hardware Universe, which provides information about the hardware that the new system supports.

Access ONTAP 9 documentation.

Access the Active IQ Config Advisor tool.

Manually upgrade controller hardware running ONTAP 9.8 or later

Overview

This procedure describes how to upgrade the controller hardware using aggregate relocation (ARL) for the following system configurations:

Method	ONTAP version	Supported systems
Manual upgrade using ARL	9.8 or earlier	• FAS system to FAS system • FAS system to a system with FlexArray Virtualization Software or a V-Series system • AFF system to AFF system • System with FlexArray Virtualization Software or a V-Series system to a FAS system, provided that the system with FlexArray Virtualization Software or V-Series system has no array LUNs. • V-Series system to a system with FlexArray Virtualization Software or a V-Series system

During the procedure, you upgrade the original controller hardware with the replacement controller hardware, relocating the ownership of non-root aggregates. You migrate aggregates multiple times from node to node to confirm that at least one node is serving data from the aggregates throughout the upgrade procedure. You also migrate data logical interfaces (LIFs) and assign the network ports on the new controller to the interface groups as you proceed.

In this document, the original nodes are called *node1* and *node2*, and the new nodes are called *node3* and *node4*. During the described procedure, node1 is replaced by node3, and node2 is replaced by node4.
The terms *node1*, *node2*, *node3*, and *node4* are used only to distinguish between the original and new nodes. When following the procedure, you must substitute the real names of your original and new nodes. However, in reality, the names of the nodes do not change: node3 has the name node1, and node4 has the name node2 after the controller hardware is upgraded.
This document uses the term *systems with FlexArray Virtualization Software* to refer to systems that belong to these new platforms. It uses the term *V-Series system* to refer to the separate hardware systems that can attach to storage arrays

Important information:

- This procedure is complex and assumes that you have advanced ONTAP administration skills. You also must read and understand the Guidelines for upgrading controllers with ARL and the ARL upgrade workflow sections before beginning the upgrade.

- This procedure assumes that the replacement controller hardware is new and has not been used. The steps required to prepare used controllers with the `wipeconfig` command are not included in this procedure. You must contact technical support if the replacement controller hardware was previously used, especially if the controllers were running Data ONTAP in 7-Mode.
- You can use this procedure to upgrade the controller hardware in clusters with more than two nodes; however, you need to perform the procedure separately for each high-availability (HA) pair in the cluster.
- This procedure applies to FAS systems, V-Series systems, AFF systems, and systems with FlexArray Virtualization Software. FAS systems released after ONTAP 9 can attach to storage arrays if the required license is installed. The existing V-Series systems are supported in ONTAP 9. For information about the storage array and V-Series models, refer to References to link to the *Hardware Universe* and see the *V-Series Support Matrix*.
- In addition to non-MetroCluster configurations, this procedure applies to Fabric MetroCluster four-node and eight-node configurations running ONTAP 9.8 and later.
  - For MetroCluster configurations running ONTAP 9.7 and earlier, go to References to link to *Using Aggregate Relocation to Manually Upgrade Controller Hardware Running ONTAP 9.7 or Earlier*.
  - For MetroCluster IP configurations and additional upgrade options for Fabric MetroCluster configurations, go to References to link to the *MetroCluster Upgrade and Expansion* content.

Decide whether to use the aggregate relocation procedure

This content describes how to upgrade the storage controllers in an HA pair with new controllers while keeping all the existing data and disks. This is a complex procedure that should be used only by experienced administrators.

Use this content under the following circumstances:

- You do not want to add the new controllers as a new HA pair to the cluster and migrate the data using volume moves.
- You are experienced in administering ONTAP and are comfortable with the risks of working in the diagnostic privilege mode.
- You have a system that uses Fabric MetroCluster 4-node and 8-node configurations running ONTAP 9.8 or later.

You can use NetApp Storage Encryption (NSE) and NetApp Volume Encryption (NVE) with this procedure.

If you prefer a different method of upgrading the controller hardware and are willing to do volume moves, refer to References to link to *Upgrade by moving volumes or storage*.

Refer to References to link to the *ONTAP 9 Documentation Center* where you can access ONTAP 9 product documentation.

ARL upgrade workflow

Before you upgrade the nodes using ARL, you must understand how the procedure works. In this document, the procedure is broken down into several stages.

Upgrade the node pair

To upgrade the node pair, you must prepare the original nodes and then perform a series of steps on both the original and new nodes. You can then decommission the original nodes.

ARL upgrade sequence overview

During the procedure, you upgrade the original controller hardware with the replacement controller hardware, one controller at a time, taking advantage of the HA pair configuration to relocate the ownership of non-root aggregates. All non-root aggregates must undergo two relocations to reach their final destination, which is the correct upgraded node.

Each aggregate has a home owner and current owner. The home owner is the actual owner of the aggregate, and the current owner is the temporary owner.

The following illustration shows the stages of the procedure. The thick, light gray arrows represent the relocation of aggregates and the movement of LIFs, and the thinner black arrows represent the removal of the original nodes. The smaller controller images represent the original nodes, and the larger controller images represent the new nodes.

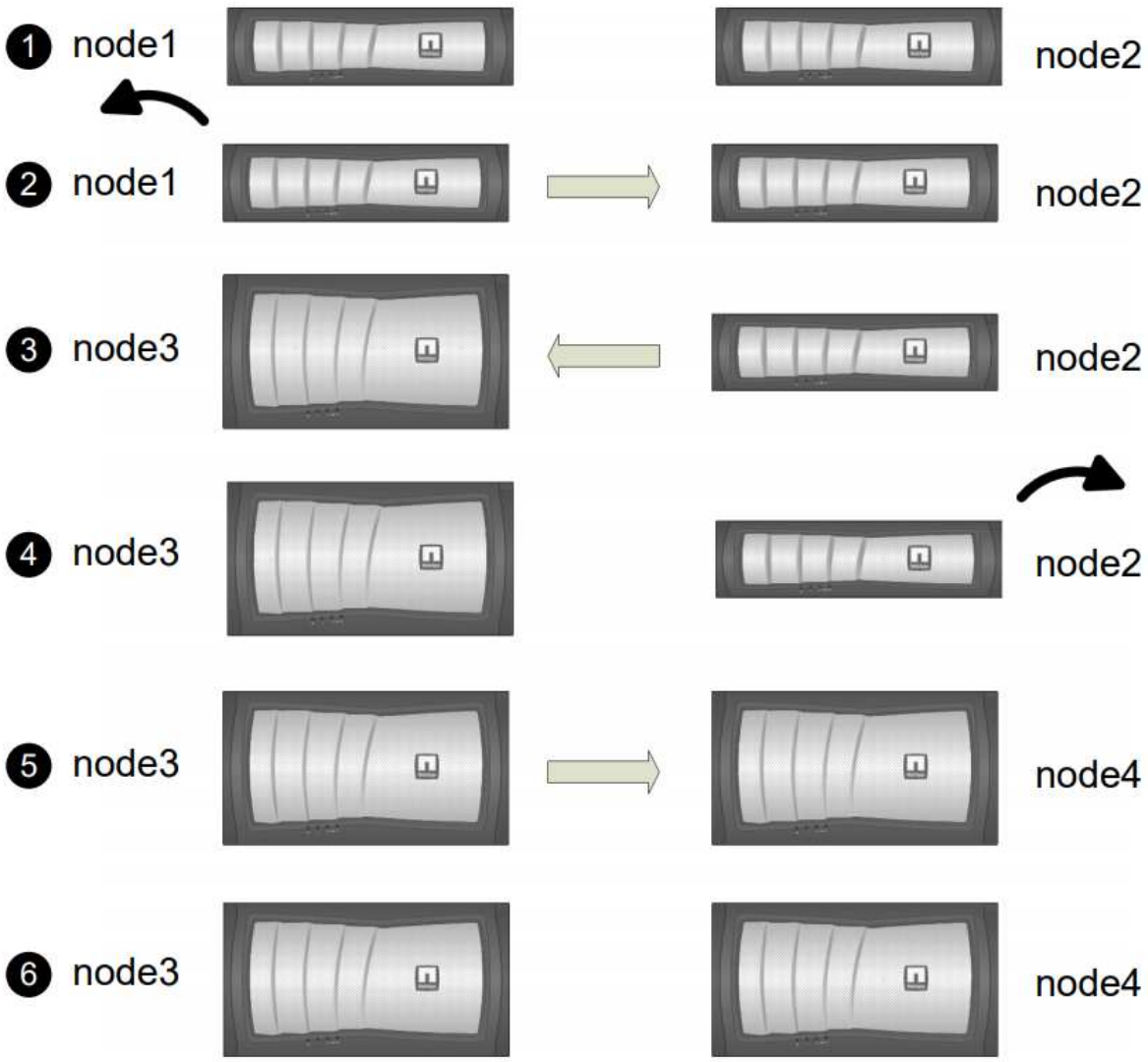

The following table describes the high-level tasks you perform during each stage and the state of aggregate ownership at the end of the stage. Detailed steps are provided later in the procedure:

Stage	Steps
Stage 1: Prepare for upgrade	1. Determine whether the controller has aggregates on internal disk drives. This step is required only if you are upgrading from a controller with internal disk drive. 2. Prepare the nodes for upgrade. 3. Rekey disks for Storage Encryption. This task is required only if you are upgrading from a system with self-encrypting drives. 4. Verify the SnapMirror relationship state on the cluster and quiesce all relationships between the clusters. 5. Prepare for netboot. Aggregate ownership at the end of Stage 1: • Node1 is the home owner and current owner of the node1 aggregates. • Node2 is the home owner and current owner of the node2 aggregates.
Stage 2: Retire node1	1. Relocate non-root aggregates from node1 to node2. 2. Move non-SAN data LIFSs owned by node1 to node2. 3. Record node1 information. 4. Relocate failed or vetoed aggregates. 5. Retire node1. Aggregate ownership at the end of Stage 2: • Node1 is the home owner of node1 aggregates. • Node2 is the current owner of node1 aggregates. • Node2 is the home owner and current owner of node2 aggregates.

Stage	Steps
Stage 3: Install and boot node3	1. Install and boot node3. 2. Set the UTA/UTA2 configuration on node3. 3. Map ports from node1 to node3. 4. Move non-SAN data LIFs owned by node1 from node2 to node3 and verify SNA LIFs on node3. 5. Relocate non-root aggregates from node2 to node3. 6. Move non-SAN data LIFs owned by node2 to node3. Aggregate ownership at the end of Stage 3: • Node2 is the home owner of node2 aggregates but not the current owner. • Node3 is the home owner and current owner of aggregates originally belonging to node1. • Node2 is the home owner and current owner of aggregates belonging to node2 but not the home owner.
Stage 4: Retire node2	1. Record node2 information. 2. Retire node2. No changes occur in aggregate ownership.
Stage 5: Install and boot node4	1. Install and boot node4. 2. Set the UTA/UTA2 configuration on node4. 3. Map ports from node2 to node4. 4. Move non-SAN data LIFs owned by node2 from node3 to node4 and verify SNA LIFs on node4. 5. Relocate node2's non-root aggregates from node3 to node4. Aggregate ownership at the end of Stage 5: • Node3 is the home owner and current owner of the aggregates that originally belonged to node1. • Node4 is the home owner and current owner of aggregates that originally belonged to node2.

Stage	Steps
Stage 6: Complete the upgrade	1. Confirm the new controllers are set up correctly. 2. Set up Storage Encryption on the new nodes. This task is required only if you are upgrading to a system with self-encrypting drives. 3. Decommission the old system. 4. Resume NetApp SnapMirror relationships. **Note:** The storage virtual machine (SVM) disaster recovery updates will not be interrupted as per the schedules assigned. No changes occur in aggregate ownership.

Guidelines for upgrading controllers with ARL

To understand whether you can use aggregate relocation (ARL) to upgrade a pair of controllers running ONTAP 9.8 depends on the platform and the configuration of both the original and replacement controllers.

Supported upgrades for ARL

You can upgrade a pair of nodes using ARL under the following circumstances:

- Both the original controllers and the replacement controllers must be running the same version of ONTAP 9.8 before the upgrade.
- The replacement controllers must have equal or higher capacity than the original controllers. Equal or higher capacity refers to attributes, such as the NVRAM size, volume, LUN, or aggregate count limits; it also refers to the maximum volume or aggregate sizes of the new nodes.
- You can upgrade the following type of systems:
  - A FAS system to a FAS system.
  - A FAS system to a system with FlexArray Virtualization Software or a V-Series system.
  - An AFF system to an AFF system.
  - A system with FlexArray Virtualization Software or a V-Series system to a FAS system, provided that the system with FlexArray Virtualization Software or V-Series system has no array LUNs.
  - A V-Series system to a system with FlexArray Virtualization Software or a V-Series system.
- For some ARL controller upgrades you can use temporary cluster ports on the replacement controller for the upgrade. For example, if you upgrade from an AFF A300 to an AFF A400 system, depending on the AFF A400 configuration, you can use any of the two mezzanine ports or add a four-port 10GbE network interface card to provide temporary cluster ports. After you complete a controller upgrade using temporary cluster ports, you can nondisruptively migrate clusters to 100GbE ports on the replacement controller.
- Controller upgrade using ARL is supported on systems configured with SnapLock Enterprise and SnapLock Compliance volumes.

You must verify whether the ARL can be performed on the original and replacement controllers. You must

check the size of all defined aggregates and number of disks supported by the original system. Then compare them with the aggregate size and number of disks supported by the new system. To access this information, refer to References to link to the *Hardware Universe*. The aggregate size and the number of disks supported by the new system must be equal to or greater than the aggregate size and number of disks supported by the original system.

You must validate in the cluster mixing rules whether new nodes can become part of the cluster with the existing nodes when the original controller is replaced. For more information about cluster mixing rules, refer to References to link to the *Hardware Universe*.

Both systems are either high-availability (HA) or non-HA. Both nodes must either have the personality enabled or disabled; you cannot combine a node with the All Flash Optimized personality enabled with a node that does not have the personality enabled in the same HA pair. If the personalities are different, contact technical support.

If the new system has fewer slots than the original system, or if it has fewer or different ports, you might need to add an adapter to the new system. Refer to References to link to the *Hardware Universe* on the NetApp Support Site for details about specific platforms.

If you have a system with more than two cluster ports per node, such as an FAS8080 or an AFF8080 system, before you start the upgrade, you must migrate and re-home the cluster LIFs to two cluster ports per node. If you perform the controller upgrade with more than two cluster ports per node, cluster LIFs might be missing on the new controller after the upgrade.

Upgrades not supported for ARL

You cannot perform the following upgrades:

- To or from controllers that cannot run ONTAP 9.8 or later.
- To replacement controllers that do not support the disk shelves connected to the original controllers.

  For disk-support information, refer to References to link to the *Hardware Universe*.

- From controllers with root aggregates or data aggregates on internal drives.

  If you want to upgrade controllers with root aggregates or data aggregates on internal disk drives, refer to References to link to *Upgrade by moving volumes or storage* and go to the procedure *Upgrading a pair of nodes running clustered Data ONTAP by moving volumes*.

  If you want to upgrade ONTAP on nodes in a cluster, refer to References to link to *Upgrade ONTAP*.

Assumptions and terminology

This document is written with the following assumptions:

- The replacement controller hardware is new and has not been used.

Attention: Because this procedure assumes that the replacement controller hardware is new and has not been used, the steps required to prepare used controllers with the `wipeconfig` command are not included in this procedure. You must contact technical support if the replacement controller hardware was previously used, especially if the controllers were running Data ONTAP in 7-Mode.

- You read and understand the guidelines for upgrading the pair of nodes.

Attention: Do not try to clear the NVRAM contents. If you need to clear the contents of NVRAM, contact NetApp technical support.

- You are performing the appropriate command before and after the `modify` commands and comparing the output of both `show` commands to verify that the `modify` command was successful.
- If you have a SAN configuration, you have local and partner LIFs for each storage virtual machine (SVM), on the HA pair. If you do not have local and partner LIFs for each SVM, you should add the SAN data LIF on the remote and local node for that SVM before beginning the upgrade.
- If you have port sets in a SAN configuration, you must have verified that each bound port set contains at least one LIF from each node in the HA pair.

This procedure uses the term *boot environment prompt* to refer to the prompt on a node from which you can perform certain tasks, such as rebooting the node and printing or setting environmental variables. The prompt is sometimes referred to informally as the *boot loader prompt*.

The boot environment prompt is shown in the following example:

```
LOADER>
```

Licensing in ONTAP 9.8 or Later

When you set up a cluster, the setup wizard prompts you to enter the cluster-base license key. However, some features require additional licenses, which are issued as *packages* that include one or more features. Each node in the cluster must have its own key for each feature to be used in the cluster.

If you do not have new license keys, currently licensed features in the cluster are available to the new controller and will continue to work. However, using unlicensed features on the controller might put you out of compliance with your license agreement, so you must install the new license key or keys for the new controller after the upgrade is complete.

All license keys are 28 uppercase alphabetic characters in length. Refer to References to link to the *NetApp Support Site* where you can obtain new 28-character license keys for ONTAP 9.8. or later. The keys are available in the *My Support* section under *Software licenses*. If the site does not have the license keys you need, contact your NetApp sales representative.

For detailed information about licensing, go to References to link to the *System Administration Reference*.

Storage Encryption

The original nodes or the new nodes might be enabled for Storage Encryption. In that case, you must take additional steps in this procedure to verify that Storage Encryption is set up correctly.

If you want to use Storage Encryption, all the disk drives associated with the nodes must have self-encrypting

disk drives.

Two-node switchless clusters

If you are upgrading nodes in a two-node switchless cluster, you can leave the nodes in the switchless cluster while performing the upgrade. You do not need to convert them to a switched cluster

Troubleshooting

This procedure includes troubleshooting suggestions.

If any problems occur while upgrading the controllers, you can refer to the Troubleshoot section at the end of the procedure for more information and possible solutions.

If you do not find a solution to the problem you encountered, contact technical support.

Required tools and documentation

You must have specific tools to install the new hardware, and you need to reference other documents during the upgrade process. You also must record information essential to completing the controller upgrade; a worksheet is provided to record information.

You need the following tools to perform the upgrade:

- Grounding strap
- #2 Phillips screwdriver

Go to the References section to access the list of reference documents required for this upgrade.

Worksheet: Information to collect before and during controller upgrade

You must gather certain information to successfully upgrade the original nodes. The information includes node IDs, port and LIF details, licensing keys, and IP addresses.

You can use the following worksheet to record information for use later in the procedure:

Information needed	When collected	When used	Collected Information
Model, system ID, serial number of original nodes	Stage 1: *Prepare the nodes for the upgrade*	Stage 3: *Install and boot node3* Stage 5: *Install and boot node4* Stage 6: *Decommission the old system*	
Shelf and disk information, flash storage details, memory, NVRAM, and adapter cards on original nodes	Stage 1: *Preparing the nodes for the upgrade*	Throughout the procedure	

Information needed	When collected	When used	Collected Information
Online aggregates and volumes on original nodes	Stage 1: *Prepare the nodes for the upgrade*	Throughout the procedure to verify that aggregates and volumes remain online except during brief relocation	
Output of commands `network port vlan show` and `network port ifgrp show`	Stage 1: *Prepare the nodes for the upgrade*	Stage 3: *Map ports from node1 to node3* Stage 5: *Map ports from node2 to node4*	
(SAN environments only) Default configuration of FC ports	Stage 1: *Prepare the nodes for the upgrade*	When configuring FC ports on the new nodes	
(V-Series systems or systems with FlexArray Virtualization software only) Topology for V-Series systems or systems with FlexArray Virtualization software	Stage 1: *Prepare the nodes for the upgrade*	Stage 3: *Install and boot node3* Stage 5: *Install and boot node4*	
IP address of SPs	Stage 1: *Prepare the nodes for the upgrade*	Stage 6: *Confirm that the new controllers are set up correctly*	
License keys	Stage 1: *Prepare the nodes for the upgrade*	Stage 6: *Confirm that the new controllers are set up correctly*	
IP address for the external key management server	Stage 1: *Rekey disks for Storage Encryption*	Stage 6: *Set up Storage Encryption on the new nodes*	
Name and path of web-accessible directory where you download files to netboot the nodes	Stage 1: *Prepare to netboot*	Stage 3: *Install and boot node3* Stage 5: *Install and boot node4*	
Non-SAN data LIFs owned by node1	Stage 2: *Move nonSAN data LIFs owned by node1 to node2*	Later in the section	
Cluster, intercluster, node-management, cluster-management, and physical ports	Stage 2: *Record node1 information*	Stage 3: *Install and boot node3* Stage 3: *Map ports from node1 to node3*	

Information needed	When collected	When used	Collected Information
Ports on new nodes	Stage 3: *Map ports from node1 to node3*	Later in the section and in the section *Map ports from node2 to node4*	
Available ports and broadcast domains on node3	Stage 3: *Map ports from node1 to node3*	Later in the section	
Non-SAN data LIFs not owned by node2	*Moving non-SAN data LIFs belonging to node1 from node2 to node3 and verifying SAN LIFs on node3*	Later in the section	
Non-SAN data LIFs owned by node2	Stage 3: *Move nonSAN data LIFs owned by node2 to node3*	Later in the section	
Cluster, intercluster, node-management, cluster-management, and physical ports	Stage 4: *Record node2 information*	Stage 5: *Install and booting node4* Stage 5:_ Map ports from node2 to node4_	
Cluster network ports on node4	Stage 5: *Map ports from node2 to node4*	Later in the section	
Available ports and broadcast domains on node4	Stage 5: *Map ports from node2 to node4*	Later in the section	
Private and public SSL certificates for the storage system and private SSL certificates for each key management server	Stage 6: *Set up Storage Encryption on the new nodes*	Later in the section	

Stage 1. Prepare for upgrade

Stage 1. Prepare for the upgrade

During Stage 1, you must prepare the nodes for the upgrade and run a series of prechecks. You might need to rekey disks for Storage Encryption. You must also prepare to netboot the new controllers.

Steps

1. Determine whether the controller has aggregates on internal disk drives
2. Prepare the nodes for upgrade
3. Get an IP address of an external key management server for storage encryption
4. Manage authentication using KMIP servers
5. Manage authentication using an onboard key manager

6. Quiesce the SnapMirror relationships
7. Prepare for netboot

Determine whether the controller has aggregates on internal disk drives

If you are upgrading controllers with internal disk drives, you need to complete several commands and examine their output to confirm that none of the internal disk drives contains root aggregates or data aggregates.

About this task

If you are not upgrading controllers with aggregates on internal disk drives, skip this section and go to the section Prepare the nodes for upgrade.

Steps

1. Enter the nodeshell, once for each of the original nodes.

   ```
   system node run -node <node_name>
   ```

2. Display the internal drives:

   ```
   sysconfig -av
   ```

   The system displays detailed information about the node's configuration, including storage, as seen in the partial output shown in the following example:

```
node> sysconfig -av
slot 0: SAS Host Adapter 0a (PMC-Sierra PM8001 rev. C, SAS, UP)
                Firmware rev: 01.11.06.00
                 Base WWN: 5:00a098:0008a3b:b0
                 Phy State: [0] Enabled, 6.0 Gb/s
                            [1] Enabled, 6.0 Gb/s
                            [2] Enabled, 6.0 Gb/s
                            [3] Enabled, 6.0 Gb/s
                ID Vendor Model FW Size
                00.0 : NETAPP X306_HMARK02TSSM NA04 1695.4GB (3907029168
512B/sect)
                00.1 : NETAPP X306_HMARK02TSSM NA04 1695.4GB (3907029168
512B/sect)
                00.2 : NETAPP X306_HMARK02TSSM NA04 1695.4GB (3907029168
512B/sect)
                00.3 : NETAPP X306_HMARK02TSSM NA04 1695.4GB (3907029168
512B/sect)
                00.4 : NETAPP X306_HMARK02TSSM NA04 1695.4GB (3907029168
512B/sect)
                00.5 : NETAPP X306_HMARK02TSSM NA04 1695.4GB (3907029168
512B/sect)
                00.6 : NETAPP X306_HMARK02TSSM NA04 1695.4GB (3907029168
512B/sect)
                00.7 : NETAPP X306_HMARK02TSSM NA04 1695.4GB (3907029168
512B/sect)
                00.8 : NETAPP X306_HMARK02TSSM NA04 1695.4GB (3907029168
512B/sect)
                00.9 : NETAPP X306_HMARK02TSSM NA04 1695.4GB (3907029168
512B/sect)
                00.10: NETAPP X306_HMARK02TSSM NA04 1695.4GB (3907029168
512B/sect)
                00.11: NETAPP X306_HMARK02TSSM NA04 1695.4GB (3907029168
512B/sect)
...
```

3. Examine the storage output of the `sysconfig -av` command to identify the internal disk drives, and then record the information.

   Internal drives have "00." at the beginning of their ID. The "00." indicates an internal disk shelf, and the number after the decimal point indicates the individual disk drive.

4. Enter the following command on both controllers:

   `aggr status -r`

   The system displays the aggregate status of the node, as shown in the partial output in the following example:

```
node> aggr status -r
Aggregate aggr2 (online, raid_dp, parity uninit'd!) (block checksums)
Plex /aggr2/plex0 (online, normal, active)
RAID group /aggr2/plex0/rg0 (normal, block checksums)

RAID Disk Device    HA SHELF BAY CHAN Pool Type RPM  Used (MB/blks)
Phys (MB/blks)
--------- --------- -- ----- --- ---- ---- ---- ---- ------------------
------------------
dparity   0a.00.1   0a   0    1  SA:B  0   BSAS 7200 1695466/3472315904
1695759/3472914816
parity    0a.00.3   0a   0    3  SA:B  0   BSAS 7200 1695466/3472315904
1695759/3472914816
data      0a.00.9   0a   0    9  SA:B  0   BSAS 7200 1695466/3472315904
1695759/3472914816
...
```

The device used to create the aggregate might not be a physical disk but might be a partition.

5. Examine the output of the `aggr status -r` command to identify the aggregates using internal disk drives, and then record the information.

   In the example in the previous step, "aggr2" uses internal drives, as indicated by the shelf ID of "0".

6. Enter the following command on both controllers:

   ```
   aggr status -y
   ```

   The system displays information about the volumes on the aggregate, as shown in the partial output in the following example:

```
node> aggr status -v
...
 aggr2   online   raid_dp, aggr    nosnap=off, raidtype=raid_dp,
raidsize=14,
                  64-bit           raid_lost_write=on,
ignore_inconsistent=off,
                  rlw_on           snapmirrored=off, resyncsnaptime=60,
                                   fs_size_fixed=off,
lost_write_protect=on,
                                   ha_policy=cfo, hybrid_enabled=off,
percent_snapshot_space=0%,
                                   free_space_realloc=off, raid_cv=on,
thorough_scrub=off
         Volumes: vol6, vol5, vol14
...
 aggr0   online   raid_dp, aggr    root, diskroot, nosnap=off,
raidtype=raid_dp,
                  64-bit           raidsize=14, raid_lost_write=on,
ignore_inconsistent=off,
                  rlw_on           snapmirrored=off,  resyncsnaptime=60,
fs_size_fixed=off,
                                   lost_write_protect=on, ha_policy=cfo,
hybrid_enabled=off,
                                   percent_snapshot_space=0%,
free_space_realloc=off, raid_cv=on
         Volumes: vol0
```

Based on the output in Step 4 and Step 6, aggr2 uses three internal drives—"0a.00.1", "0a.00.3", and "0a.00.9"—and the volumes on "aggr2" are "vol6", "vol5", and "vol14". Also, in the output of Step 6, the readout for "aggr0" contains the word "root" at the beginning of the information for the aggregate. That indicates that it contains a root volume.

7. Examine the output of the `aggr status -v` command to identify the volumes belonging to any aggregates that are on an internal drive and whether any of those volumes contain a root volume.
8. Exit the nodeshell by entering the following command on each controller:

   `exit`

9. Take one of the following actions:

If the controllers….	Then…
Do not contain any aggregates on internal disk drives	Continue with this procedure.

If the controllers….	Then…
Contain aggregates but no volumes on the internal disk drives	Continue with this procedure. **Note**: Before you continue, you must place the aggregates offline, and then destroy the aggregates on the internal disk drives. Refer to References to link to the *Disk and aggregate management with the CLI* content for information about managing aggregates.
Contain non-root volumes on the internal drives	Continue with this procedure. **Note**: Before you continue, you must move the volumes to an external disk shelf, place the aggregates offline, and then destroy the aggregates on the internal disk drives. Refer to References to link to the *Disk and aggregate management with the CLI* content for information about moving volumes.
Contain root volumes on the internal drives	Do not continue with this procedure. You can upgrade the controllers by referring to References to link to the *NetApp Support Site* and using the procedure *Upgrading the controller hardware on a pair of nodes running clustered Data ONTAP by moving volumes*.
Contain non-root volumes on the internal drives and you cannot move the volumes to external storage	Do not continue with this procedure. You can upgrade the controllers by using the procedure *Upgrading the controller hardware on a pair of nodes running clustered Data ONTAP by moving volumes*. Refer to References to link to the *NetApp Support Site* where you can access this procedure.

Prepare the nodes for upgrade

Before you can replace the original nodes, you must confirm that they are in an HA pair, have no missing or failed disks, can access each other's storage, and do not own data LIFs assigned to the other nodes in the cluster. You also must collect information about the original nodes and, if the cluster is in a SAN environment, confirm that all the nodes in the cluster are in quorum.

Steps

1. Confirm that each of the original nodes has enough resources to adequately support the workload of both nodes during takeover mode.

   Refer to References to link to *High Availability management* and follow the *Best practices for HA pairs* section. Neither of the original nodes should be running at more than 50 percent utilization; if a node is running at less than 50 percent utilization, it can handle the loads for both nodes during the controller upgrade.

2. Complete the following substeps to create a performance baseline for the original nodes:

   a. Make sure that the diagnostic user account is unlocked.

      Important: The diagnostic user account is intended only for low-level diagnostic purposes and should be used only with guidance from technical support.

Important: For information about unlocking the user accounts, refer to References to link to the *System Administration Reference*.

b. Refer to References to link to the *NetApp Support Site* and download the Performance and Statistics Collector (Perfstat Converged).

The Perfstat Converged tool lets you establish a performance baseline for comparison after the upgrade.

c. Create a performance baseline, following the instructions on the NetApp Support Site.

3. Refer to References to link to the *NetApp Support Site* and open a support case on the NetApp Support Site.

You can use the case to report any issues that might arise during the upgrade.

4. Verify that NVMEM or NVRAM batteries of node3 and node4 are charged, and charge them if they are not.

You must physically check node3 and node4 to see if the NVMEM or NVRAM batteries are charged. For information about the LEDs for the model of node3 and node4, refer to References to link to the *Hardware Universe*.

Attention Do not try to clear the NVRAM contents. If there is a need to clear the contents of NVRAM, contact NetApp technical support.

5. Check the version of ONTAP on node3 and node4.

The new nodes must have the same version of ONTAP 9.x installed on them that is installed on the original nodes. If the new nodes have a different version of ONTAP installed, you must netboot the new controllers after you install them. For instructions on how to upgrade ONTAP, refer to References to link to *Upgrade ONTAP*.

Information about the version of ONTAP on node3 and node4 should be included in the shipping boxes. The ONTAP version is displayed when the node boots up or you can boot the node to maintenance mode and run the command:

```
version
```

6. Check whether you have two or four cluster LIFs on node1 and node2:

```
network interface show -role cluster
```

The system displays any cluster LIFs, as shown in the following example:

```
cluster::> network interface show -role cluster
        Logical    Status     Network          Current  Current Is
Vserver Interface  Admin/Oper Address/Mask     Node     Port    Home
------- ---------- ---------- ---------------- -------- ------- ----
node1
        clus1      up/up      172.17.177.2/24  node1    e0c     true
        clus2      up/up      172.17.177.6/24  node1    e0e     true
node2
        clus1      up/up      172.17.177.3/24  node2    e0c     true
        clus2      up/up      172.17.177.7/24  node2    e0e     true
```

7. If you have two or four cluster LIFs on node1 or node2, make sure that you can ping both cluster LIFs across all the available paths by completing the following substeps:
   a. Enter the advanced privilege level:

      `set -privilege advanced`

      The system displays the following message:

      ```
      Warning: These advanced commands are potentially dangerous; use them
      only when directed to do so by NetApp personnel.
      Do you wish to continue? (y or n):
      ```

   b. Enter `y`.
   c. Ping the nodes and test the connectivity:

      `cluster ping-cluster -node node_name`

      The system displays a message similar to the following example:

```
cluster::*> cluster ping-cluster -node node1
Host is node1
Getting addresses from network interface table...
Local = 10.254.231.102 10.254.91.42
Remote = 10.254.42.25 10.254.16.228
Ping status:
...
Basic connectivity succeeds on 4 path(s) Basic connectivity fails on
0 path(s)
................
Detected 1500 byte MTU on 4 path(s):
Local 10.254.231.102 to Remote 10.254.16.228
Local 10.254.231.102 to Remote 10.254.42.25
Local 10.254.91.42 to Remote 10.254.16.228
Local 10.254.91.42 to Remote 10.254.42.25
Larger than PMTU communication succeeds on 4 path(s)
RPC status:
2 paths up, 0 paths down (tcp check)
2 paths up, 0 paths down (udp check)
```

If the node uses two cluster ports, you should see that it is able to communicate on four paths, as shown in the example.

d. Return to the administrative level privilege:

```
set -privilege admin
```

8. Confirm that node1 and node2 are in an HA pair and verify that the nodes are connected to each other, and that takeover is possible:

```
storage failover show
```

The following example shows the output when the nodes are connected to each other and takeover is possible:

```
cluster::> storage failover show
                              Takeover
Node           Partner        Possible State Description
-------------- -------------- -------- -------------------------------
node1          node2          true     Connected to node2
node2          node1          true     Connected to node1
```

Neither node should be in partial giveback. The following example shows that node1 is in partial giveback:

```
cluster::> storage failover show
                              Takeover
Node           Partner        Possible State Description
-------------- -------------- -------- -------------------------------
node1          node2          true     Connected to node2, Partial
giveback
node2          node1          true     Connected to node1
```

If either node is in partial giveback, use the `storage failover giveback` command to perform the giveback, and then use the `storage failover show-giveback` command to make sure that no aggregates still need to be given back. For detailed information about the commands, refer to References to link to *High Availability management*.

9. Confirm that neither node1 nor node2 owns the aggregates for which it is the current owner (but not the home owner):

   `storage aggregate show -node <node_name> -is-home false -fields owner-name,homename,state`

   If neither node1 nor node2 owns aggregates for which it is the current owner (but not the home owner), the system will return a message similar to the following example:

```
cluster::> storage aggregate show -node node2 -is-home false -fields
owner-name,homename,state
There are no entries matching your query.
```

   The following example shows the output of the command for a node named node2 that is the home owner, but not the current owner, of four aggregates:

```
cluster::> storage aggregate show -node node2 -is-home false
               -fields owner-name,home-name,state

aggregate     home-name    owner-name   state
------------- ------------ ------------ ------
aggr1         node1        node2        online
aggr2         node1        node2        online
aggr3         node1        node2        online
aggr4         node1        node2        online

4 entries were displayed.
```

10. Take one of the following actions:

If the command in Step 9…	Then…
Had blank output	Skip Step 11 and go to Step 12.

If the command in Step 9…	Then…
Had output	Go to Step 11.

11. If either node1 or node2 owns aggregates for which it is the current owner but not the home owner, complete the following substeps:

    a. Return the aggregates currently owned by the partner node to the home owner node:

    ```
    storage failover giveback -ofnode <home_node_name>
    ```

    b. Verify that neither node1 nor node2 still owns aggregates for which it is the current owner (but not the home owner):

    ```
    storage aggregate show -nodes <node_name> -is-home false -fields owner-name,home-name,state
    ```

    The following example shows the output of the command when a node is both the current owner and home owner of aggregates:

    ```
    cluster::> storage aggregate show -nodes node1
              -is-home true -fields owner-name,home-name,state

    aggregate     home-name    owner-name   state
    ------------- ------------ ------------ ------
    aggr1         node1        node1        online
    aggr2         node1        node1        online
    aggr3         node1        node1        online
    aggr4         node1        node1        online

    4 entries were displayed.
    ```

12. Confirm that node1 and node2 can access each other's storage and verify that no disks are missing:

    ```
    storage failover show -fields local-missing-disks,partner-missing-disks
    ```

    The following example shows the output when no disks are missing:

    ```
    cluster::> storage failover show -fields local-missing-disks,partner-
    missing-disks

    node     local-missing-disks partner-missing-disks
    -------- ------------------- ---------------------
    node1    None                None
    node2    None                None
    ```

    If any disks are missing, refer to References to link to *Disk and aggregate management with the CLI*, *Logical storage management with the CLI*, and *High Availability management* to configure storage for the

HA pair.

13. Confirm that node1 and node2 are healthy and eligible to participate in the cluster:

    `cluster show`

    The following example shows the output when both nodes are eligible and healthy:

```
cluster::> cluster show

Node                  Health  Eligibility
--------------------- ------- ------------
node1                 true    true
node2                 true    true
```

14. Set the privilege level to advanced:

    `set -privilege advanced`

15. Confirm that node1 and node2 are running the same ONTAP release:

    `system node image show -node <node1,node2> -iscurrent true`

    The following example shows the output of the command:

```
cluster::*> system node image show -node node1,node2 -iscurrent true

                  Is      Is                Install
Node     Image    Default Current Version   Date
-------- ------- ------- ------- --------- -------------------
node1
         image1  true    true    9.1         2/7/2017 20:22:06
node2
         image1  true    true    9.1         2/7/2017 20:20:48

2 entries were displayed.
```

16. Verify that neither node1 nor node2 owns any data LIFs that belong to other nodes in the cluster and check the `Current Node` and `Is Home` columns in the output:

    `network interface show -role data -is-home false -curr-node <node_name>`

    The following example shows the output when node1 has no LIFs that are home-owned by other nodes in the cluster:

```
cluster::> network interface show -role data -is-home false -curr-node
node1
 There are no entries matching your query.
```

The following example shows the output when node1 owns data LIFs home-owned by the other node:

```
cluster::> network interface show -role data -is-home false -curr-node
node1

            Logical    Status     Network            Current
Current Is
Vserver     Interface  Admin/Oper Address/Mask       Node           Port
Home
----------- ---------- ---------- ------------------ -------------
------- ----
vs0
            data1      up/up      172.18.103.137/24  node1          e0d
false
            data2      up/up      172.18.103.143/24  node1          e0f
false

2 entries were displayed.
```

17. If the output in Step 15 shows that either node1 or node2 owns any data LIFs home-owned by other nodes in the cluster, migrate the data LIFs away from node1 or node2:

    `network interface revert -vserver * -lif *`

    For detailed information about the `network interface revert` command, refer to References to link to the *ONTAP 9 Commands: Manual Page Reference*.

18. Check whether node1 or node2 owns any failed disks:

    `storage disk show -nodelist <node1,node2> -broken`

    If any of the disks have failed, remove them, following instructions in the *Disk and aggregate management with the CLI*. (Refer to References to link to *Disk and aggregate management with the CLI*.)

19. Collect information about node1 and node2 by completing the following substeps and recording the output of each command:

    - You will use this information later in the procedure.
    - If you have a system with more than two cluster ports per node, such as an FAS8080 or an AFF8080 system, before you start the upgrade, you must migrate and re-home the cluster LIFs to two cluster ports per node. If you perform the controller upgrade with more than two cluster ports per node, cluster LIFs might be missing on the new controller after the upgrade.

a. Record the model, system ID, and serial number of both nodes:

```
system node show -node <node1,node2> -instance
```

You will use the information to reassign disks and decommission the original nodes.

b. Enter the following command on both node1 and node2 and record information about the shelves, number of disks in each shelf, flash storage details, memory, NVRAM, and network cards from the output:

```
run -node <node_name> sysconfig
```

You can use the information to identify parts or accessories that you might want to transfer to node3 or node4. If you do not know if the nodes are V-Series systems or have FlexArray Virtualization software, you can learn that also from the output.

c. Enter the following command on both node1 and node2 and record the aggregates that are online on both nodes:

```
storage aggregate show -node <node_name> -state online
```

You can use this information and the information in the following substep to verify that the aggregates and volumes remain online throughout the procedure, except for the brief period when they are offline during relocation.

d. Enter the following command on both node1 and node2 and record the volumes that are offline on both nodes:

```
volume show -node <node_name> -state offline
```

After the upgrade, you will run the command again and compare the output with the output in this step to see if any other volumes have gone offline.

1. Enter the following commands to see if any interface groups or VLANs are configured on node1 or node2:

   ```
   network port ifgrp show
   ```

   ```
   network port vlan show
   ```

   Make note of whether interface groups or VLANs are configured on node1 or node2; you need that information in the next step and later in the procedure.

2. Complete the following substeps on both node1 and node2 to confirm that physical ports can be mapped correctly later in the procedure:

e. Enter the following command to see if there are failover groups on the node other than `clusterwide`:

```
network interface failover-groups show
```

Failover groups are sets of network ports present on the system. Because upgrading the controller hardware can change the location of physical ports, failover groups can be inadvertently changed during the upgrade.

The system displays failover groups on the node, as shown in the following example:

```
cluster::> network interface failover-groups show

Vserver              Group              Targets
-------------------- ------------------ ----------
Cluster              Cluster            node1:e0a, node1:e0b
                                        node2:e0a, node2:e0b

fg_6210_e0c          Default            node1:e0c, node1:e0d
                                        node1:e0e, node2:e0c
                                        node2:e0d, node2:e0e

2 entries were displayed.
```

f. If there are failover groups present other than `clusterwide`, record the failover group names and the ports that belong to the failover groups.

g. Enter the following command to see if there are any VLANs configured on the node:

`network port vlan show -node <node_name>`

VLANs are configured over physical ports. If the physical ports change, then the VLANs will need to be re-created later in the procedure.

The system displays VLANs configured on the node, as shown in the following example:

```
cluster::> network port vlan show

Network Network
Node    VLAN Name Port    VLAN ID MAC Address
------  --------- ------- ------- ------------------
node1   e1b-70    e1b     70      00:15:17:76:7b:69
```

h. If there are VLANs configured on the node, take note of each network port and VLAN ID pairing.

1. Take one of the following actions:

If interface groups or VLANS are…	Then…
On node1 or node2	Complete Step 23 and Step 24.
Not on node1 or node2	Go to Step 24.

2. If you do not know if node1 and node2 are in a SAN or non-SAN environment, enter the following command and examine its output:

`network interface show -vserver <vserver_name> -data-protocol iscsi|fcp`

If neither iSCSI nor FC is configured for the SVM, the command will display a message similar to the following example:

```
cluster::> network interface show -vserver Vserver8970 -data-protocol
iscsi|fcp
There are no entries matching your query.
```

You can confirm that the node is in a NAS environment by using the `network interface show` command with the `-data-protocol nfs|cifs` parameters.

If either iSCSI or FC is configured for the SVM, the command will display a message similar to the following example:

```
cluster::> network interface show -vserver vs1 -data-protocol
iscsi|fcp

         Logical    Status     Network            Current  Current Is
Vserver  Interface  Admin/Oper Address/Mask       Node     Port
Home
-------- ---------- ---------- ------------------ -------- -------
----
vs1      vs1_lif1   up/down    172.17.176.20/24   node1    0d
true
```

3. Verify that all the nodes in the cluster are in quorum by completing the following substeps:

i. Enter the advanced privilege level:

`set -privilege advanced`

The system displays the following message:

```
Warning: These advanced commands are potentially dangerous; use them
only when directed to do so by NetApp personnel.
Do you wish to continue? (y or n):
```

j. Enter `y`.

k. Verify the cluster service state in the kernel, once for each node:

`cluster kernel-service show`

The system displays a message similar to the following example:

```
cluster::*> cluster kernel-service show

Master        Cluster       Quorum        Availability  Operational
Node          Node          Status        Status        Status
------------- ------------- ------------- ------------- -------------
node1         node1         in-quorum     true          operational
              node2         in-quorum     true          operational

2 entries were displayed.
```

Nodes in a cluster are in quorum when a simple majority of nodes are healthy and can communicate with each other. For more information, refer to References to link to the *System Administration Reference*.

l. Return to the administrative privilege level:

```
set -privilege admin
```

1. Take one of the following actions:

If the cluster…	Then…
Has SAN configured	Go to Step 26.
Does not have SAN configured	Go to Step 29.

2. Verify that there are SAN LIFs on node1 and node2 for each SVM that has either SAN iSCSI or FC service enabled by entering the following command and examining its output:

   ```
   network interface show -data-protocol iscsi|fcp -home-node <node_name>
   ```

   The command displays SAN LIF information for node1 and node2. The following examples show the status in the Status Admin/Oper column as up/up, indicating that SAN iSCSI and FC service are enabled:

```
cluster::> network interface show -data-protocol iscsi|fcp
            Logical    Status     Network                  Current
Current Is
Vserver     Interface  Admin/Oper Address/Mask             Node
Port    Home
----------- ---------- ---------- ------------------       ---------
------- ----
a_vs_iscsi  data1      up/up      10.228.32.190/21         node1
e0a     true
            data2      up/up      10.228.32.192/21         node2
e0a     true

b_vs_fcp    data1      up/up      20:09:00:a0:98:19:9f:b0  node1
0c      true
            data2      up/up      20:0a:00:a0:98:19:9f:b0  node2
0c      true

c_vs_iscsi_fcp data1   up/up      20:0d:00:a0:98:19:9f:b0  node2
0c      true
            data2      up/up      20:0e:00:a0:98:19:9f:b0  node2
0c      true
            data3      up/up      10.228.34.190/21         node2
e0b     true
            data4      up/up      10.228.34.192/21         node2
e0b     true
```

Alternatively, you can view more detailed LIF information by entering the following command:

```
network interface show -instance -data-protocol iscsi|fcp
```

3. Capture the default configuration of any FC ports on the original nodes by entering the following command and recording the output for your systems:

   ```
   ucadmin show
   ```

   The command displays information about all FC ports in the cluster, as shown in the following example:

```
cluster::> ucadmin show

                Current Current   Pending Pending   Admin
Node    Adapter Mode    Type      Mode    Type      Status
------- ------- ------- --------- ------- --------- -----------
node1   0a      fc      initiator -       -         online
node1   0b      fc      initiator -       -         online
node1   0c      fc      initiator -       -         online
node1   0d      fc      initiator -       -         online
node2   0a      fc      initiator -       -         online
node2   0b      fc      initiator -       -         online
node2   0c      fc      initiator -       -         online
node2   0d      fc      initiator -       -         online
8 entries were displayed.
```

You can use the information after the upgrade to set the configuration of FC ports on the new nodes.

4. If you are upgrading a V-Series system or a system with FlexArray Virtualization software, capture information about the topology of the original nodes by entering the following command and recording the output:

   ```
   storage array config show -switch
   ```

   The system displays topology information, as show in the following example:

```
cluster::> storage array config show -switch

      LUN LUN                                    Target Side Initiator
Side Initi-
Node  Grp Cnt Array Name    Array Target Port  Switch Port Switch
Port    ator
----- --- --- ------------- ------------------ -----------
-------------- ------
node1 0   50  I_1818FAStT_1
                            205700a0b84772da   vgbr6510a:5
vgbr6510s164:3  0d
                            206700a0b84772da   vgbr6510a:6
vgbr6510s164:4  2b
                            207600a0b84772da   vgbr6510b:6
vgbr6510s163:1  0c
node2 0   50  I_1818FAStT_1
                            205700a0b84772da   vgbr6510a:5
vgbr6510s164:1  0d
                            206700a0b84772da   vgbr6510a:6
vgbr6510s164:2  2b
                            207600a0b84772da   vgbr6510b:6
vgbr6510s163:3  0c
                            208600a0b84772da   vgbr6510b:5
vgbr6510s163:4  2a
7 entries were displayed.
```

5. Complete the following substeps:

m. Enter the following command on one of the original nodes and record the output:

```
service-processor show -node * -instance
```

The system displays detailed information about the SP on both nodes.

n. Confirm that the SP status is `online`.

o. Confirm that the SP network is configured.

p. Record the IP address and other information about the SP.

You might want to reuse the network parameters of the remote management devices, in this case the SPs, from the original system for the SPs on the new nodes.
For detailed information about the SP, refer to References to link to the *System Administration Reference* and the *ONTAP 9 Commands: Manual Page Reference*.

1. If you want the new nodes to have the same licensed functionality as the original nodes, enter the following command to see the cluster licenses on the original system:

```
system license show -owner *
```

The following example shows the site licenses for cluster1:

```
system license show -owner *
Serial Number: 1-80-000013
Owner: cluster1

Package           Type    Description           Expiration
----------------- ------- --------------------- -----------
Base              site    Cluster Base License  -
NFS               site    NFS License           -
CIFS              site    CIFS License          -
SnapMirror        site    SnapMirror License    -
FlexClone         site    FlexClone License     -
SnapVault         site    SnapVault License     -
6 entries were displayed.
```

2. Obtain new license keys for the new nodes at the *NetApp Support Site*. Refer to References to link to *NetApp Support Site*.

   If the site does not have the license keys you need, contact your NetApp sales representative.

3. Check whether the original system has AutoSupport enabled by entering the following command on each node and examining its output:

   ```
   system node autosupport show -node <node1,node2>
   ```

   The command output shows whether AutoSupport is enabled, as shown in the following example:

   ```
   cluster::> system node autosupport show -node node1,node2

   Node              State     From          To                Mail Hosts
   ----------------- --------- ------------- ----------------  ----------
   node1             enable    Postmaster    admin@netapp.com  mailhost

   node2             enable    Postmaster    -                 mailhost
   2 entries were displayed.
   ```

4. Take one of the following actions:

If the original system…	Then…
Has AutoSupport enabled…	a. Go to Step 34. b. Go to the section Get an IP address of an external key management server for Storage Encryption.

If the original system…	Then…
Does not have AutoSupport enabled…	a. Enable AutoSupport by following the instructions in the *System Administration Reference*. (Refer to References to link to the *System Administration Reference*.) **Note:** AutoSupport is enabled by default when you configure your storage system for the first time. Although you can disable AutoSupport at any time, you should leave it enabled. Enabling AutoSupport can significantly help identify problems and solutions should a problem occur on your storage system. b. Go to the Get an IP address of an external key management server for Storage Encryption section.

5. Verify that AutoSupport is configured with the correct mailhost details and recipient e-mail IDs by entering the following command on both of the original nodes and examining the output:

   ```
   system node autosupport show -node node_name -instance
   ```

   For detailed information about AutoSupport, refer to References to link to the *System Administration Reference* and the *ONTAP 9 Commands: Manual Page Reference*.

6. Send an AutoSupport message to NetApp for node1 by entering the following command:

   ```
   system node autosupport invoke -node node1 -type all -message "Upgrading
   node1 from platform_old to platform_new"
   ```

   Do not send an AutoSupport message to NetApp for node2 at this point; you do so later in the procedure.

7. Verify that the AutoSupport message was sent by entering the following command and examining its output:

   ```
   system node autosupport show -node <node1> -instance
   ```

   The fields `Last Subject Sent:` and `Last Time Sent:` contain the message title of the last message sent and the time the message was sent.

Get an IP address of an external key management server for Storage Encryption

After upgrading, you must immediately configure Storage Encryption and establish a cluster-wide authentication key to replace the previous node-level authentication keys.

Steps

1. Install the necessary client and server secure sockets layer (SSL) certificates required to communicate with key management servers:

   ```
   security certificate install
   ```

2. Configure Storage Encryption on all nodes by using the following command on each node:

```
security key-manager setup
```

3. Add the IP address for each key management server:

```
security key-manager add
```

4. Verify that the same key management servers are configured and available on all nodes in the cluster:

```
security key-manager show -status
```

5. Create a new cluster-wide authentication key:

```
security key-manager create-key
```

6. Make a note of the new authentication key ID.
7. Rekey all self-encrypting drives with the new authentication key:

```
storage encryption disk modify -disk * -data-key-id <authentication_key_id>
```

Manage authentication using KMIP servers

With ONTAP 9.5 and later, you can use Key Management Interoperability Protocol (KMIP) servers to manage authentication keys.

Steps

1. Add a new controller:

```
security key-manager setup -node <new_controller_name>
```

2. Add the key manager:

```
security key-manager -add <key_management_server_ip_address>
```

3. Verify that the key management servers are configured and available to all nodes in the cluster:

```
security key-manager show -status
```

4. Restore the authentication keys from all linked key management servers to the new node:

```
security key-manager restore -node <new_controller_name>
```

5. Rekey all self-encrypting disks with the new authentication key:

```
storage encryption disk modify -disk * [-data-key-id nonMSID AK]
```

6. If you use the Federal Information Processing Standard (FIPS), rekey all self-encrypting disks with the new authentication key:

```
storage encryption disk* modify -disk * [-fips-key-id nonMSID AK]
```

Manage authentication using an onboard key manager

You can use an onboard key manager to manage authentication keys. If you plan to use an onboard key manager (OKM), you must record the passphrase and backup material before the beginning the upgrade.

Steps

1. Verify the key management servers are available to all nodes in the cluster:

   ```
   security key-manager key show
   ```

2. Rekey all self-encrypting disks with the new authentication key:

   ```
   storage encryption disk modify -disk * [-data-key-id nonMSID AK>]
   ```

3. If you use the Federal Information Processing Standard (FIPS), rekey all self-encrypting disks with the new authentication key:

   ```
   storage encryption disk* modify -disk * [-fips-key-id nonMSID AK]
   ```

Quiesce the SnapMirror relationships

Before you netboot the system, you must confirm that all the SnapMirror relationship are quiesced. When a SnapMirror relationship is quiesced, it remains quiesced across reboots and failovers.

Steps

1. Verify the SnapMirror relationship status on the destination cluster:

   ```
   snapmirror show
   ```

   If the status is `Transferring`, you must abort those transfers:
   `snapmirror abort -destination-vserver <vserver name>`

   The abort fails if the SnapMirror relationship is not in the `Transferring` state.

2. Quiesce all relationships between the cluster:

   ```
   snapmirror quiesce -destination-vserver <vserver-name>
   ```

Prepare for netboot

After you physically rack node3 and node4 later in the procedure, you might need to netboot them. The term *netboot* means you are booting from an ONTAP image stored on a remote server. When preparing for netboot, you must put a copy of the ONTAP 9 boot image onto a web server that the system can access.

Before you begin

- Verify that you can access a HTTP server with the system.

- Refer to References to link to the *NetApp Support Site* and download the necessary system files for your platform and the correct version of ONTAP.

About this task

You must netboot the new controllers if they do not have the same version of ONTAP 9 installed on them that is installed on the original controllers. After you install each new controller, you boot the system from the ONTAP 9 image stored on the web server. You can then download the correct files to the boot media device for subsequent system boots.

However, you do not need to netboot the controllers if the same version of ONTAP 9 is installed on them that is installed on the original controllers. If so, you can skip this section and proceed to Stage 3: Install and boot node3.

Steps

1. Access the NetApp Support Site to download the files used for performing the netboot of the system.
2. Download the appropriate ONTAP software from the software download section of the NetApp Support Site and store the `<ontap_version>_image.tgz` file on a web-accessible directory.
3. Change to the web-accessible directory and verify that the files you need are available.

For…	Then…

FAS/AFF8000 series systems	Extract the contents of the `<ontap_version>_image.tgz` file to the target directory:
	
	`tar -zxvf <ontap_version>_image.tgz`
	
	Note: If you are extracting the contents on Windows, use 7-Zip or WinRAR to extract the netboot image.
	
	Your directory listing should contain a netboot folder with a kernel file:
	
	`netboot/kernel`

All other systems	Your directory listing should contain the following file: `<ontap_version>_image.tgz` **Note**: You do not need to extract the contents of the `<ontap_version>_image.tgz` file.

You will use information in the directories in Stage 3.

Stage 2. Relocate and retire node1

Stage 2. Relocate and retire node1

During Stage 2, you relocate the node1 aggregates and LIFs to node2, record node1 information, and then retire node1. This process is largely automated; the operation pauses to enable you to check its status. You must manually resume the operation.

Steps

1. Relocating non-root aggregates and NAS data LIFs owned by node1 to node2
2. Moving NAS data LIFs owned by node1 to node2
3. Recording node1 information
4. Retire node1

Relocate non-root aggregates from node1 to node2

Before you can replace node1 with node3, you must move the non-root aggregates from node1 to node2 by using the storage aggregate relocation command and then verifying the relocation.

Steps

1. Relocate the non-root aggregates by completing the following substeps:
   a. Set the privilege level to advanced:

      ```
      set -privilege advanced
      ```

   b. Enter the following command:

      ```
      storage aggregate relocation start -node <node1> -destination <node2>
      -aggregate-list * -ndo-controller-upgrade true
      ```

   c. When prompted, enter `y`.

      Relocation will occur in the background. It could take anywhere from a few seconds to a couple of minutes to relocate an aggregate. The time includes both client outage and non-outage portions. The command does not relocate any offline or restricted aggregates.

   d. Return to the admin level by entering the following command:

      ```
      set -privilege admin
      ```

2. Check the relocation status by entering the following command on node1:

   ```
   storage aggregate relocation show -node <node1>
   ```

   The output will display `Done` for an aggregate after it has been relocated.

   Wait until all non-root aggregates owned by node1 have been relocated to node2 before proceeding to the next step.

3. Take one of the following actions:

If relocation…	Then..
Of all aggregates is successful	Go to Step 4.

If relocation…	Then..

Of any aggregates fails or is vetoed	a. Check the EMS logs for the corrective action.
	b. Perform the corrective action.
	c. Relocate any failed or vetoed aggregates:
	`storage aggregate relocation start -node <node1> - destination <node2> -aggregate-list * -ndo-controller-upgrade true`
	d. When prompted, enter `y`.
	e. Return to the admin level:
	`set -privilege admin`
	If necessary, you can force the relocation using one of the following methods:
	◦ Override veto checks:
	`storage aggregate relocation start -override -vetoes true -ndo-controller-upgrade`
	◦ Override destination checks:
	`storage aggregate relocation start -override -destination-checks true -ndo-controller -upgrade`
	Refer to References to link to the *Disk and aggregate management with the CLI* content and the *ONTAP 9 Commands: Manual Page Reference* for more information about storage aggregate relocation commands.

4. Verify that all the non-root aggregates are online and their state on node2:

`storage aggregate show -node <node2> -state online -root false`

The following example shows that the non-root aggregates on node2 are online:

```
cluster::> storage aggregate show -node node2 state online -root false
Aggregate     Size Available Used% State   #Vols  Nodes            RAID
Status
--------- -------- --------- ----- ------- ------ ----------------
------------
aggr_1
           744.9GB 744.8GB      0% online       5 node2
raid_dp,

normal
aggr_2     825.0GB 825.0GB      0% online       1 node2
raid_dp,

normal
2 entries were displayed.
```

If the aggregates have gone offline or become foreign on node2, bring them online by using the following command on node2, once for each aggregate:

`storage aggregate online -aggregate <aggr_name>`

5. Verify that all the volumes are online on node2 by entering the following command on node2 and examining its output:

   `volume show -node <node2> -state offline`

   If any volumes are offline on node2, bring them online by using the following command on node2, once for each volume:

   `volume online -vserver <vserver-name> -volume <volume-name>`

   The `vserver-name` to use with this command is found in the output of the previous `volume show` command.

6. Enter the following command on node2:

   `storage failover show -node <node2>`

   The output should display the following message:

   ```
   Node owns partner's aggregates as part of the nondisruptive controller
   upgrade procedure.
   ```

7. Verify that node1 does not own any non-root aggregates that are online:

   `storage aggregate show -owner-name <node1> -ha-policy sfo -state online`

   The output should not display any online non-root aggregates, which have already been relocated to

node2.

Move NAS data LIFs owned by node1 to node2

Before you can replace node1 with node3, you must move the NAS data LIFs owned by node1 to node2 if you have a two-node cluster, or to a third node if your cluster has more than two nodes. The method you use depends on whether the cluster is configured for NAS or SAN.

About this task

Remote LIFs handle traffic to SAN LUNs during the upgrade procedure. Moving SAN LIFs is not necessary for cluster or service health during the upgrade. You must verify that the LIFs are healthy and located on appropriate ports after you bring node3 online.

Steps

1. List all the NAS data LIFs hosted on node1 by entering the following command and capturing the output:

   ```
   network interface show -data-protocol nfs|cifs -curr-node <node1>
   ```

   ```
    cluster::> network interface show -data-protocol nfs|cifs -curr-node
   node1

             Logical     Status      Network             Current   Current
   Is
    Vserver  Interface   Admin/Oper  Address/Mask        Node      Port
   Home
    -------- ----------  ----------  ------------------  --------- -------
   ----
    vs0
             a0a         up/down     10.63.0.53/24       node1     a0a
   true
             data1       up/up       10.63.0.50/18       node1     e0c
   true
             rads1       up/up       10.63.0.51/18       node1     e1a
   true
             rads2       up/down     10.63.0.52/24       node1     e1b
   true
    vs1
             lif1        up/up       192.17.176.120/24   node1     e0c
   true
             lif2        up/up       172.17.176.121/24   node1     e1a
   true
   ```

2. Modify the auto revert settings of all the LIFs on node1 and node2:

   ```
   network interface modify -vserver <Vserver_name> -lif <LIF_name> -auto-revert
   false
   ```

3. Take the following steps to migrate any NAS data LIFs hosted on interface groups and VLANs on node1:

   a. Migrate the LIFs hosted on any interface groups and the VLANs on node1 to a port on node2 that is capable of hosting LIFs on the same network as that of the interface groups by entering the following command, once for each LIF:

   ```
   network interface migrate -vserver <Vserver_name> -lif <LIF_name>
   -destination-node <node2> -destination-port <netport|ifgrp>
   ```

   b. Modify the home port and the home node of the LIFs and VLANs in Substep a to the port and node currently hosting the LIFs by entering the following command, once for each LIF:

   ```
   network interface modify -vserver <Vserver_name> -lif <LIF_name> -home-node
   <node2> - home-port <netport|ifgrp>
   ```

4. Take one of the following actions:

If the cluster is configured for…	Then…
NAS	Complete Step 5 through Step 8.
SAN	Disable all the SAN LIFs on the node to take them down for the upgrade: `network interface modify -vserver <Vserver-name> -lif <LIF_name> -home-node <node_to_upgrade> -home-port <netport|ifgrp> -status-admin down`

5. Migrate NAS data LIFs from node1 to node2 by entering the following command, once for each data LIF:

   ```
   network interface migrate -vserver <Vserver-name> -lif <LIF_name> -destination
   -node <node2> -destination-port <data_port>
   ```

6. Enter the following command and examine its output to verify that LIFs have been moved to the correct ports and that the LIFs have the status of up by entering the following command on either node and examining the output:

   ```
   network interface show -curr-node <node2> -data-protocol nfs|cifs
   ```

7. Modify the home node of the migrated LIFs:

   ```
   network interface modify -vserver <Vserver-name> -lif <LIF_name> -home-node
   <node2> -home-port <port_name>
   ```

8. Verify whether the LIF is using the port as its home or current port. If the port is not home or current port then go to Step 9:

   ```
   network interface show -home-node <node2> -home-port <port_name>

   network interface show -curr-node <node_name> -curr-port <port_name>
   ```

9. If the LIFs are using the port as a home port or current port, then modify the LIF to use a different port:

   ```
   network interface migrate -vserver <Vserver-name> -lif <LIF_name>
   -destination-node <node_name> -destination-port <port_name>
   ```

```
network interface modify -vserver <Vserver-name> -lif <LIF_name> -home-node
<node_name> -home-port <port_name>
```

10. If any LIFs are down, set the administrative status of the LIFs to "up" by entering the following command, once for each LIF:

```
network interface modify -vserver <Vserver-name> -lif <LIF_name> -home-node
<nodename> -status-admin up
```

> For MetroCluster configurations, you might not be able to change the broadcast domain of a port because it is associated with a port hosting the LIF of a destination storage virtual machine (SVM). Enter the following command from the corresponding source SVM on the remote site to reallocate the destination LIF to an appropriate port:
> `metrocluster vserver resync -vserver <Vserver_name>`

11. Enter the following command and examine its output to verify that there are no data LIFs remaining on node1:

```
network interface show -curr-node <node1> -role data
```

Record node1 information

Before you can shut down and retire node1, you must record information about its cluster network, management, and FC ports as well as its NVRAM System ID. You need that information later in the procedure when you map node1 to node3 and reassign disks.

Steps

1. Enter the following command and capture its output:

```
network route show
```

The system displays output similar to the following example:

```
cluster::> network route show

Vserver         Destination    Gateway      Metric
 -------------- -------------- ----------- -------
 iscsi vserver  0.0.0.0/0       10.10.50.1  20
 node1          0.0.0.0/0       10.10.20.1  10
 ....
 node2          0.0.0.0/0       192.169.1.1 20
```

2. Enter the following command and capture its output:

```
vserver services name-service dns show
```

The system displays output similar to the following example:

```
 cluster::> vserver services name-service dns show
                                                                  Name
 Vserver        State     Domains                                Servers
 -------------- --------- ------------------------------------
---------------
 node 1 2       enabled   alpha.beta.gamma.netapp.com
10.10.60.10,

10.10.60.20
 vs_base1       enabled   alpha.beta.gamma.netapp.com,
10.10.60.10,
                          beta.gamma.netapp.com,
10.10.60.20
 ...
 ...
 vs peer1        enabled  alpha.beta.gamma.netapp.com,
10.10.60.10,
                          gamma.netapp.com
10.10.60.20
```

3. Find the cluster network and node-management ports on node1 by entering the following command on either controller:

   ```
   network interface show -curr-node <node1> -role cluster,intercluster,node-
   mgmt,cluster-mgmt
   ```

   The system displays the cluster, intercluster, node-management, and cluster-management LIFs for the node in the cluster, as shown in the following example:

```
 cluster::> network interface show -curr-node <node1>
            -role cluster,intercluster,node-mgmt,cluster-mgmt

              Logical       Status     Network            Current
Current Is
  Vserver     Interface     Admin/Oper Address/Mask       Node     Port
Home
  ----------- ------------- ---------- ------------------ --------
------- ----
  vserver1
              cluster mgmt   up/up     192.168.x.xxx/24   node1    e0c
true
  node1
              intercluster   up/up     192.168.x.xxx/24   node1    e0e
true
              clus1          up/up     169.254.xx.xx/24   node1    e0a
true
              clus2          up/up     169.254.xx.xx/24   node1    e0b
true
              mgmt1          up/up     192.168.x.xxx/24   node1    e0c
true
 5 entries were displayed.
```

Your system might not have intercluster LIFs.

4. Capture the information in the output of the command in Step 3 to use in the section Map ports from node1 to node3.

   The output information is required to map the new controller ports to the old controller ports.

5. Enter the following command on node1:

   `network port show -node <node1> -type physical`

   The system displays the physical ports on the node as shown in the following example:

```
 sti8080mcc-htp-008::> network port show -node sti8080mcc-htp-008 -type
physical

 Node: sti8080mcc-htp-008

                                                                   Ignore
                                             Speed(Mbps)  Health   Health
 Port  IPspace  Broadcast Domain Link MTU   Admin/Oper   Status   Status
 ----  -------  ---------------- ---- ----  -----------  -------
-------
 e0M   Default  Mgmt             up   1500  auto/1000    healthy  false
 e0a   Default  Default          up   9000  auto/10000   healthy  false
 e0b   Default  -                up   9000  auto/10000   healthy  false
 e0c   Default  -                down 9000  auto/-       -        false
 e0d   Default  -                down 9000  auto/-       -        false
 e0e   Cluster  Cluster          up   9000  auto/10000   healthy  false
 e0f   Default  -                up   9000  auto/10000   healthy  false
 e0g   Cluster  Cluster          up   9000  auto/10000   healthy  false
 e0h   Default  Default          up   9000  auto/10000   healthy  false
 9 entries were displayed.
```

6. Record the ports and their broadcast domains.

   The broadcast domains will need to be mapped to the new ports on the new controller later in the procedure.

7. Enter the following command on node1:

   `network fcp adapter show -node <node1>`

   The system displays the FC ports on the node, as shown in the following example:

```
 cluster::> fcp adapter show -node <node1>
                      Connection  Host
 Node         Adapter Established Port Address
 ------------ ------- ----------- ------------
 node1
               0a     ptp         11400
 node1
               0c     ptp         11700
 node1
               6a     loop        0
 node1
               6b     loop        0
 4 entries were displayed.
```

8. Record the ports.

   The output information is required to map the new FC ports on the new controller later in the procedure.

9. If you did not do so earlier, check whether there are interface groups or VLANs configured on node1 by entering the following commands:

   ```
   network port ifgrp show

   network port vlan show
   ```

   You will use the information in the section Map ports from node1 to node3.

10. Take one of the following actions:

If you…	Then…
Recorded the NVRAM System ID number in the section Prepare the nodes for the upgrade.	Go on to the next section, Retire node1.
Did not record the NVRAM System ID number in the section Prepare the nodes for the upgrade	Complete Step 11 and Step 12 and then continue to Retire node1.

11. Enter the following command on either controller:

    ```
    system node show -instance -node <node1>
    ```

    The system displays information about node1 as shown in the following example:

    ```
    cluster::> system node show -instance -node <node1>
                                Node: node1
                               Owner:
                            Location: GDl
                               Model: FAS6240
                       Serial Number: 700000484678
                           Asset Tag: -
                              Uptime: 20 days 00:07
                     NVRAM System ID: 1873757983
                           System ID: 1873757983
                              Vendor: NetApp
                              Health: true
                         Eligibility: true
    ```

12. Record the NVRAM System ID number to use in the section Install and boot node3.

Retire node1

To retire node1, you must disable the HA pair with node2, shut node1 down correctly, and remove it from the rack or chassis.

Steps

1. Verify the number of nodes in the cluster:

   `cluster show`

   The system displays the nodes in the cluster, as shown in the following example:

   ```
   cluster::> cluster show
   Node                  Health  Eligibility
   --------------------- ------- ------------
   node1                 true    true
   node2                 true    true
   2 entries were displayed.
   ```

2. Disable storage failover, as applicable:

If the cluster is…	Then…

A two-node cluster	a. Disable cluster high availability by entering the following command on either node:
	
	`cluster ha modify -configured false`
	
	a. Disable storage failover:
	
	`storage failover modify -node <node1> -enabled false`

A cluster with more than two nodes	Disable storage failover: `storage failover modify -node <node1> -enabled false`

3. Verify that storage failover was disabled:

   `storage failover show`

   The following example shows the output of the `storage failover show` command when storage failover has been disabled for a node:

```
 cluster::> storage failover show
                                 Takeover
 Node           Partner         Possible State Description
 -------------- -------------- --------
-------------------------------------
 node1          node2          false    Connected to node2, Takeover
                                        is not possible: Storage
failover is
                                        disabled

 node2          node1          false    Node owns partner's aggregates
as part
                                        of the nondisruptive controller
upgrade
                                        procedure. Takeover is not
possible:
                                        Storage failover is disabled
 2 entries were displayed.
```

4. Verify the data LIF status:

   `network interface show -role data -curr-node <node2> -home-node <node1>`

   Look in the **Status Admin/Oper** column to see if any LIFs are down. If any LIFs are down, consult the Troublehsoot section.

5. Take one of the following actions:

If the cluster is…	Then…
A two-node cluster	Go to Step 6.
A cluster with more than two nodes	Go to Step 8.

6. Access the advanced privilege level on either node:

   `set -privilege advanced`

7. Verify that the cluster HA has been disabled:

   `cluster ha show`

   The system displays the following message:

   ```
   High Availability Configured: false
   ```

   If cluster HA has not been disabled, repeat Step 2.

8. Check whether node1 currently holds epsilon:

   ```
   cluster show
   ```

   Because there is the possibility of a tie in a cluster that has an even number of nodes, one node has an extra fractional voting weight called epsilon. Refer to References to link to the *System Administration Reference* for more information.

   > If you have a four-node cluster, epsilon might be on a node in a different HA pair in the cluster.
   >
   > If you are upgrading a HA pair in a cluster with multiple HA pairs, you must move epsilon to the node of a HA pair not undergoing a controller upgrade. For example, if you are upgrading nodeA/nodeB in a cluster with the HA pair configuration nodeA/nodeB and nodeC/nodeD, you must move epsilon to nodeC or nodeD.

   The following example shows that node1 holds epsilon:

   ```
   cluster::*> cluster show

   Node                  Health  Eligibility  Epsilon
   --------------------- ------- ------------ ------------
   node1                 true    true         true
   node2                 true    true         false
   ```

9. If node1 holds epsilon, then mark epsilon `false` on the node so that it can be transferred to the node2:

   ```
   cluster modify -node <node1> -epsilon false
   ```

10. Transfer epsilon to node2 by marking epsilon `true` on node2:

    ```
    cluster modify -node <node2> -epsilon true
    ```

11. Verify that the change to node2 occurred:

    ```
    cluster show
    ```

    ```
    cluster::*> cluster show
    Node                  Health  Eligibility  Epsilon
    --------------------- ------- ------------ ------------
    node1                 true    true         false
    node2                 true    true         true
    ```

    The epsilon for node2 should now be true and the epsilon for node1 should be false.

12. Verify whether the setup is a two-node switchless cluster:

    ```
    network options switchless-cluster show
    ```

```
cluster::*> network options switchless-cluster show

Enable Switchless Cluster: false/true
```

The value of this command must match the physical state of the system.

13. Return to the admin level:

    `set -privilege admin`

14. Halt node1 from the node1 prompt:

    `system node halt -node <node1>`

    Attention: If node1 is in same chassis as node2, do not power off the chassis by using the power switch or by pulling the power cable. If you do so, node2, which is serving data, will go down.

15. When the system prompts you to confirm that you want to halt the system, enter `y`.

    The node stops at the boot environment prompt.

16. When node1 displays the boot environment prompt, remove it from the chassis or the rack.

    You can decommission node1 after the upgrade is completed. See Decommission the old system.

Stage 3. Install and boot node3

Stage 3. Install and boot node3

During Stage 3, you install and boot node3, map the cluster and node-management ports from node1 to node3, verify the node3 installation, and move data LIFs and SAN LIFs belonging to node1 from node2 to node3. You also relocate all aggregates from node2 to node3, and move the data LIFs and SAN LIFs owned by node2 to node3.

Steps

1. Install and boot node3
2. Set the FC or UTA/UTA2 configuration on node3
3. Map ports from node1 to node3
4. Move NAS data LIFs owned by node1 from node2 to node3 and verify SAN LIFs on node3
5. Relocate non-root aggregates from node2 to node3
6. Move NAS data LIFs owned by node2 to node3

Install and boot node3

You must install node3 in the rack, transfer node1's connections to node3, boot node3, and install ONTAP. You must also reassign any of node1's spare disks, any disks

belonging to the root volume, and any non-root aggregates not relocated to node2 earlier.

About this task

You must netboot node3 if it does not have the same version of ONTAP 9 that is installed on node1. After you install node3, boot it from the ONTAP 9 image stored on the web server. You can then download the correct files to the boot media device for subsequent system boots. See Prepare for netboot.

However, you do not need to netboot node3 if it has the same or a later version of ONTAP 9 that is installed on node1.

Important: If you are upgrading a V-Series system connected to storage arrays or a system with FlexArray Virtualization software that is connected to storage arrays, you need to complete Step 1 through Step 5, leave this section at Step 6 and follow instructions in Configure FC ports on node3 and Check and configure UTA/UTA2 ports on node3 as needed, entering commands in maintenance mode. You must then return to this section and resume with Step 7.
However, if you are upgrading a system with storage disks, you need to complete this entire section and then go to Configure FC ports on node3 and Check and configure UTA/UTA2 ports on node3, entering commands at the cluster prompt.

Steps

1. Make sure that you have rack space for node3.

   If node1 and node2 were in separate chassis, you can put node3 in the same rack location as node1. However, if node1 was in the same chassis with node2, then you need to put node3 into its own rack space, preferably close to the location of node1.

2. Install node3 in the rack, following the *Installation and Setup Instructions* for your node model.

   If you are upgrading to a system with both nodes in the same chassis, install node4 in the chassis as well as node3. If you do not, when you boot node3, the node will behave as if it were in a dual-chassis configuration, and when you boot node4, the interconnect between the nodes will not come up.

3. Cable node3, moving the connections from node1 to node3.

   The following references help you make proper cable connections. Go to References to link to them.

   - *Installation and Setup Instructions* or *FlexArray Virtualization Installation Requirements and Reference* for the node3 platform
   - The appropriate disk shelf procedure
   - The *High Availability management* documentation

   Cable the following connections:

   - Console (remote management port)
   - Cluster ports
   - Data ports
   - Cluster and node management ports
   - Storage
   - SAN configurations: iSCSI Ethernet and FC switch ports

You might not need to move the interconnect card or the cluster interconnect cable connection from node1 to node3 because most platform models have a unique interconnect card model. For the MetroCluster configuration, you need to move the FC-VI cable connections from node1 to node3. If the new host does not have an FC-VI card, you might need to move the FC-VI card.

4. Turn on the power to node3, and then interrupt the boot process by pressing Ctrl-C at the console terminal to access the boot environment prompt.

   If you are upgrading to a system with both nodes in the same chassis, node4 also reboots. However, you can disregard the node4 boot until later.

   When you boot node3, you might see the following warning message:

   ```
   WARNING: The battery is unfit to retain data during a power outage. This
   is likely because the battery is discharged but could be due to other
   temporary conditions.
   When the battery is ready, the boot process will complete and services
   will be engaged.
   To override this delay, press 'c' followed by 'Enter'
   ```

5. If you see the warning message in Step 4, take the following actions:

   a. Check for any console messages that might indicate a problem other than a low NVRAM battery, and, if necessary, take any required corrective action.

   b. Allow the battery to charge and the boot process to complete.

   Attention: Do not override the delay; failure to allow the battery to charge could result in a loss of data.

6. Take one of the following actions:

If your system…	Then…
Has disks and no back-end storage	Skip Step 7 through Step 12 and go to Step 13.
Is a V-Series system or a system with FlexArray Virtualization software connected to storage arrays	a. Go to Set the FC or UTA/UTA2 configuration on node3 and complete the subsections Configure FC ports on node3 and Check and configure UTA/UTA2 ports on node3, as appropriate to your system. b. Return to this section and complete the remaining steps, beginning with Step 7. **Important**: You must reconfigure FC onboard ports, CNA onboard ports, and CNA cards before you boot ONTAP on the V-Series or system with FlexArray Virtualization software.

7. Add the FC initiator ports of the new node to the switch zones.

   If your system has a tape SAN, then you need zoning for the initiators. See your storage array and zoning

documentation for instructions.

8. Add the FC initiator ports to the storage array as new hosts, mapping the array LUNs to the new hosts.

   See your storage array and zoning documentation for instructions.

9. Modify the World Wide Port Name (WWPN) values in the host or volume groups associated with array LUNs on the storage array.

   Installing a new controller module changes the WWPN values associated with each onboard FC port.

10. If your configuration uses switch-based zoning, adjust the zoning to reflect the new WWPN values.
11. Verify that the array LUNs are now visible to node3:

    ```
    sysconfig -v
    ```

    The system displays all the array LUNs visible to each of the FC initiator ports. If the array LUNs are not visible, you will not be able to reassign disks from node1 to node3 later in this section.

12. Press Ctrl-C to display the boot menu and select maintenance mode.
13. At the Maintenance mode prompt, enter the following command:

    ```
    halt
    ```

    The system stops at the boot environment prompt.

14. Take one of the following actions:

If the system you are upgrading to is in a…	Then…
Dual-chassis configuration (with controllers in different chassis)	Go to Step 15.
Single-chassis configuration (with controllers in the same chassis)	a. Switch the console cable from node3 to node4. b. Turn on the power to node4, and then interrupt the boot process by pressing Ctrl-C at the console terminal to access the boot environment prompt. The power should already be on if both controllers are in the same chassis. **Note**: Leave node4 at the boot environment prompt; you will return to node4 in Install and boot node4. c. If you see the warning message displayed in Step 4, follow the instructions in Step 5 d. Switch the console cable back from node4 to node3. e. Go to Step 15.

15. Configure node3 for ONTAP:

```
set-defaults
```

16. If NetApp Storage Encryption (NSE) is in use on this configuration, the `setenv bootarg.storageencryption.support` command must be set to `true`, and the `kmip.init.maxwait` variable needs to be set to `off` to avoid a boot loop after the node1 configuration is loaded:

```
setenv bootarg.storageencryption.support true

setenv kmip.init.maxwait off
```

17. If the version of ONTAP installed on node3 is the same or later than the version of ONTAP 9 installed on node1, list and reassign disks to the new node3:

```
boot_ontap
```

> **Warning**: If this new node has ever been used in any other cluster or HA pair, you must run `wipeconfig` before proceeding. Failure to do so might result in service outages or data loss. Contact technical support if the replacement controller was previously used, especially if the controllers were
> running ONTAP running in 7-Mode.

18. Press CTRL-C to display the boot menu.
19. Take one of the following actions:

If the system you are upgrading…	Then…
Does *not* have the correct or current ONTAP version on node3	Go to Step 20.
Has the correct or current version of ONTAP on node3	Go to Step 25.

20. Configure the netboot connection by choosing one of the following actions.

> You must use the management port and IP as the netboot connection. Do not use a data LIF IP or else a data outage might occur while the upgrade is being performed.

If Dynamic Host Configuration Protocol (DHCP) is…	Then…
Running	Configure the connection automatically by entering the following command at the boot environment prompt: `ifconfig e0M -auto`

If Dynamic Host Configuration Protocol (DHCP) is…	Then…
Not running	Manually configure the connection by entering the following command at the boot environment prompt: `ifconfig e0M -addr=<filer_addr> -mask=<netmask> -gw=<gateway> -dns=<dns_addr> domain=<dns_domain>` `<filer_addr>` is the IP address of the storage system. `<netmask>` is the network mask of the storage system. `<gateway>` is the gateway for the storage system. `<dns_addr>` is the IP address of a name server on your network. `<dns_domain>` is the Domain Name Service (DNS) domain name. If you use this optional parameter, you do not need a fully qualified domain name in the netboot server URL; you need only the server's host name. **Note**: Other parameters might be necessary for your interface. Enter `help ifconfig` at the firmware prompt for details.

21. Perform netboot on node3:

For…	Then…
FAS/AFF8000 series systems	`netboot http://<web_server_ip>/<path_to_webaccessible_directory>/netboot/kernel`
All other systems	`netboot http://<web_server_ip>/<path_to_webaccessible_directory>/<ontap_version>_image.tgz`

The `<path_to_the_web-accessible_directory>` leads to where you downloaded the `<ontap_version>_image.tgz` in Step 1 in the section *Prepare for netboot*.

Do not interrupt the boot.

22. From the boot menu, select option **(7) Install new software** first.

This menu option downloads and installs the new ONTAP image to the boot device.

Disregard the following message:

```
This procedure is not supported for Non-Disruptive Upgrade on an HA
pair.
```

The note applies to nondisruptive upgrades of ONTAP, and not upgrades of controllers.

> Always use netboot to update the new node to the desired image. If you use another method to install the image on the new controller, the wrong image might install. This issue applies to all releases of ONTAP.

23. If you are prompted to continue the procedure, enter `y`, and when prompted for the package, enter the following URL:

    `http://<web_server_ip>/<path_to_web-accessible_directory>/<ontap_version_image>.tgz`

24. Complete the following substeps:

    a. Enter `n` to skip the backup recovery when you see the following prompt:

    ```
    Do you want to restore the backup configuration now? {y|n}
    ```

    b. Reboot by entering `y` when you see the following prompt:

    ```
    The node must be rebooted to start using the newly installed
    software. Do you want to reboot now? {y|n}
    ```

    The controller module reboots but stops at the boot menu because the boot device was reformatted and the configuration data needs to be restored.

25. Select **(5) Maintenance mode boot** by entering `5`, and then enter `y` when prompted to continue with the boot.

26. Before continuing, go to Set the FC or UTA/UTA2 configuration on node3 to make any necessary changes to the FC or UTA/UTA2 ports on the node.

    Make the changes recommended in those sections, reboot the node, and go into maintenance mode.

27. Find the system ID of node3:

    `disk show -a`

    The system displays the system ID of the node and information about its disks, as shown in the following example:

```
 *> disk show -a
 Local System ID: 536881109
 DISK     OWNER                    POOL   SERIAL    HOME          DR
 HOME                                     NUMBER
 -------- -------------            -----  -------- -------------
-------------
 0b.02.23 nst-fas2520-2(536880939) Pool0  KPG2RK6F nst-fas2520-
2(536880939)
 0b.02.13 nst-fas2520-2(536880939) Pool0  KPG3DE4F nst-fas2520-
2(536880939)
 0b.01.13 nst-fas2520-2(536880939) Pool0  PPG4KLAA nst-fas2520-
2(536880939)
 ......
 0a.00.0               (536881109) Pool0  YFKSX6JG
(536881109)
 ......
```

You might see the message `disk show: No disks match option -a.` after entering the command. This is not an error message so you can continue with the procedure.

28. Reassign node1's spares, any disks belonging to the root, and any non-root aggregates that were not relocated to node2 earlier in Relocate non-root aggregates from node1 to node2.

Enter the appropriate form of the `disk reassign` command based on whether your system has shared disks:

If disk type is…	Then run the command…
With shared disks	`disk reassign -s <node1_sysid> -d <node3_sysid> -p <node2_sysid>`
Without shared disks	`disk reassign -s <node1_sysid> -d <node3_sysid>`

For the `<node1_sysid>` value, use the information captured in Record node1 information. To obtain the value for `<node3_sysid>`, use the `sysconfig` command.

The `-p` option is only required in maintenance mode when shared disks are present.

The `disk reassign` command reassigns only those disks for which `<node1_sysid>` is the current owner.

The system displays the following message:

```
Partner node must not be in Takeover mode during disk reassignment from
maintenance mode.
Serious problems could result!!
Do not proceed with reassignment if the partner is in takeover mode.
Abort reassignment (y/n)?
```

29. Enter `n`.

The system displays the following message:

```
After the node becomes operational, you must perform a takeover and
giveback of the HA partner node to ensure disk reassignment is
successful.
Do you want to continue (y/n)?
```

30. Enter `y`

The system displays the following message:

```
Disk ownership will be updated on all disks previously belonging to
Filer with sysid <sysid>.
Do you want to continue (y/n)?
```

31. Enter `y`.

32. If you are upgrading from a system with external disks to a system that supports internal and external disks (AFF A800 systems, for example), set the node1 aggregate as root to confirm that node3 boots from the root aggregate of node1.

Warning: You must perform the following substeps in the exact order shown; failure to do so might cause an outage or even data loss.

The following procedure sets node3 to boot from the root aggregate of node1:

a. Check the RAID, plex, and checksum information for the node1 aggregate:

```
aggr status -r
```

b. Check the status of the node1 aggregate:

```
aggr status
```

c. Bring the node1 aggregate online, if necessary:

```
aggr_online <root_aggr_from_node1>
```

d. Prevent the node3 from booting from its original root aggregate:

```
aggr offline <root_aggr_on_node3>
```

e. Set the node1 root aggregate as the new root aggregate for node3:

```
aggr options <aggr_from_node1> root
```

f. Verify that the root aggregate of node3 is offline and the root aggregate for the disks brought over from node1 is online and set to root:

```
aggr status
```

> Failing to perform the previous substep might cause node3 to boot from the internal root aggregate, or it might cause the system to assume a new cluster configuration exists or prompt you to identify one.

The following shows an example of the command output:

```
-------------------------------------------------------------------
     Aggr State               Status          Options
aggr0_nst_fas8080_15 online   raid_dp, aggr   root, nosnap=on
                              fast zeroed
                              64-bit

  aggr0 offline               raid_dp, aggr   diskroot
                              fast zeroed
                              64-bit
-------------------------------------------------------------------
```

33. Verify that the controller and chassis are configured as `ha`:

```
ha-config show
```

The following example shows the output of the ha-config show command:

```
*> ha-config show
   Chassis HA configuration: ha
   Controller HA configuration: ha
```

Systems record in a programmable ROM (PROM) whether they are in an HA pair or stand-alone configuration. The state must be the same on all components within the stand-alone system or HA pair.

If the controller and chassis are not configured as "ha", use the following commands to correct the configuration:

```
ha-config modify controller ha

ha-config modify chassis ha
```

If you have a MetroCluster configuration, use the following commands to modify the controller and chassis:

```
ha-config modify controller mcc

ha-config modify chassis mcc
```

34. Destroy the mailboxes on node3:

```
mailbox destroy local
```

The console displays the following message:

```
Destroying mailboxes forces a node to create new empty mailboxes, which
clears any takeover state, removes all knowledge of out-of-date plexes
of mirrored volumes, and will prevent management services from going
online in 2-node cluster HA configurations. Are you sure you want to
destroy the local mailboxes?
```

35. Enter `y` at the prompt to confirm that you want to destroy the local mailboxes.
36. Exit maintenance mode:

```
halt
```

The system stops at the boot environment prompt.

37. On node2, check the system date, time, and time zone:

```
date
```

38. On node3, check the date at the boot environment prompt:

```
show date
```

39. If necessary, set the date on node3:

```
set date <mm/dd/yyyy>
```

40. On node3, check the time at the boot environment prompt:

```
show time
```

41. If necessary, set the time on node3:

```
set time <hh:mm:ss>
```

42. Verify the partner system ID is set correctly as noted in Step 28 under -p switch:

```
printenv partner-sysid
```

43. If necessary, set the partner system ID on node3:

```
setenv partner-sysid <node2_sysid>
```

Save the settings:

```
saveenv
```

44. Access the boot menu at the boot environment prompt:

```
boot_ontap menu
```

45. At the boot menu, select option **(6) Update flash from backup config** by entering `6` at the prompt.

The system displays the following message:

```
This will replace all flash-based configuration with the last backup to
disks. Are you sure you want to continue?:
```

46. Enter `y` at the prompt.

The boot proceeds normally, and the system then asks you to confirm the system ID mismatch.

ⓘ The system might reboot twice before displaying the mismatch warning.

47. Confirm the mismatch as shown in the following example:

```
WARNING: System id mismatch. This usually occurs when replacing CF or
NVRAM cards!
Override system id (y|n) ? [n] y
```

The node might go through one round of reboot before booting normally.

48. Log in to node3.

Set the FC or UTA/UTA2 configuration on node3

If node3 has onboard FC ports, onboard unified target adapter (UTA/UTA2) ports, or a UTA/UTA2 card, you must configure the settings before completing the rest of the procedure.

About this task

You might need to complete Configure FC ports on node3, or Check and configure UTA/UTA2 ports on node3, or both sections.

ⓘ NetApp marketing materials might use the term "UTA2" to refer to CNA adapters and ports. However, the CLI uses the term "CNA".

- If node3 does not have onboard FC ports, onboard UTA/UTA2 ports, or a UTA/UTA2 card, and you are upgrading a system with storage disks, you can skip to the Map ports from node1 to node3.
- However, if you have a V-Series system or a system with FlexArray Virtualization software with storage arrays, and node3 does not have onboard FC ports, onboard UTA/UTA ports, or a UTA/UTA2 card, return

to *Install and boot node3* and resume at Step 22.

Choices:

- Configure FC ports on node3
- Check and configure UTA/UTA2 ports on node3

Configure FC ports on node3

If node3 has FC ports, either onboard or on an FC adapter, you must set port configurations on the node before you bring it into service because the ports are not preconfigured. If the ports are not configured, you might experience a disruption in service.

Before you begin

You must have the values of the FC port settings from node1 that you saved in Prepare the nodes for upgrade.

About this task

You can skip this section if your system does not have FC configurations. If your system has onboard UTA/UTA2 ports or a UTA/UTA2 card, you configure them in Check and configure UTA/UTA2 ports on node3.

Important: If your system has storage disks, enter the commands in this section at the cluster prompt. If you have a V-Series system or have FlexArray Virtualization Software and are connected to storage arrays, enter commands in this section in maintenance mode.

Steps

1. Take one of the following actions:

If the system that you are upgrading…	Then…
Has storage disks	Go to Step 5
Is a V-Series system or has FlexArray Virtualization Software and is connected to storage arrays	Go to Step 2

2. Boot node3 and access maintenance mode:

```
boot_ontap maint
```

3. Take one of the following actions:

If the system that you are upgrading…	Then…
Has storage disks	Enter the following command: `system node hardware unified-connect show`
Is a V-series system or has FlexArray Virtualization Software and is connected to storage arrays.	Enter the following command `ucadmin show`

The system displays information about all FC and converged network adapters on the system.

4. Compare the FC settings of node3 with the settings that you captured earlier from node1.
5. Take one of the following actions:

If the default FC settings on the new nodes are…	Then…
The same as the ones you that captured on node1	Go to Step 11.
Different from the ones that you captured on node1	Go to Step 6.

6. Take one of the following actions:

If the system that you are upgrading…	Then…

Has storage disks	Modify the FC ports on node3 as needed by entering one of the following commands:
	• To program target ports:
	`system node hardware unified-connect modify -type | -t target -adapter <port_name>`
	• To program initiator ports:
	`system node hardware unified-connect modify -type | -t initiator -adapter <port_name>`
	`-t` is the FC4 type: target or initiator.

Is a V-Series system or has FlexArray Virtualization Software and is connected to storage arrays	Modify the FC ports on node3 as needed by entering the following command: `ucadmin modify -m fc -t initiator -f <adapter_port_name>` `-t` is the FC4 type, target or initiator. **Note**: The FC ports must be programmed as initiators.

7. Take one of the following actions:

If the system that you are upgrading…	Then…
Has storage disks	Verify the new settings by entering the following command and examining the output: `system node hardware unified-connect show`
Is a V-Series system or has FlexArray Virtualization Software and is connected to storage arrays	Verify the new settings by entering the following command and examining the output: `ucadmin show`

8. Exit maintenance mode by entering the following command:

```
halt
```

9. After you enter the command, wait until the system stops at the boot environment prompt.
10. Take one of the following actions:

If the system you are upgrading…	Then…
Is a V-Series system or has FlexArray Virtualization software running clustered Data ONTAP 8.3	Boot node3 and access maintenance at the boot environment prompt: `boot_ontap maint`
Is not a V-Series system or does not have FlexArray Virtualization software	Boot node3 at the boot environment prompt: `boot_ontap`

11. Take one of the following actions:

If the system that you are upgrading…	Then…
Has storage disks	• If node3 has a UTA/UTA2 card or UTA/UTA2 onboard ports, go to Check and configure UTA/UTA2 ports on node3. • If node3 does not have a UTA/UTA2 card or UTA/UTA2 onboard ports, skip Check and configure UTA/UTA2 ports on node3 and go to Map ports from node1 to node3.
Is a V-Series system or has FlexArray Virtualization Software and is connected to storage arrays	• If node3 has a card or onboard ports, go to Check and configure UTA/UTA2 ports on node3. • If node3 does not have a card or onboard ports, skip Check and configure UTA/UTA2 ports on node3, and return to *Install and boot node3* and resume at Step 7.

Check and configure UTA/UTA2 ports on node3

If node3 has onboard UTA/UTA2 ports or a UTA/UTA2 card, you must check the configuration of the ports and possibly reconfigure them, depending on how you want to use the upgraded system.

Before you begin

You must have the correct SFP+ modules for the UTA/UTA2 ports.

About this task

If you want to use a Unified Target Adapter (UTA/UTA2) port for FC, you must first verify how the port is configured.

NetApp marketing materials might use the term UTA2 to refer to CNA adapters and ports. However, the CLI uses the term CNA.

You can use the `ucadmin show` command to verify the current port configuration:

```
*> ucadmin show
          Current  Current    Pending  Pending    Admin
 Adapter  Mode     Type       Mode     Type       Status
 -------  -------  ---------  -------  ---------  -----------
 0e       fc       target     -        initiator  offline
 0f       fc       target     -        initiator  offline
 0g       fc       target     -        initiator  offline
 0h       fc       target     -        initiator  offline
 1a       fc       target     -        -          online
 1b       fc       target     -        -          online
6 entries were displayed.
```

UTA/UTA2 ports can be configured into native FC mode or UTA/UTA2 mode. FC mode supports FC initiator and FC target; UTA/UTA2 mode enables concurrent NIC and FCoE traffic sharing the same 10GbE SFP+ interface and supports FC targets.

UTA/UTA2 ports might be found on an adapter or on the controller, and have the following configurations, but you should check the configuration of the UTA/UTA2 ports on the node3 and change it, if necessary:

- UTA/UTA2 cards ordered when the controller is ordered are configured before shipment to have the personality you request.
- UTA/UTA2 cards ordered separately from the controller are shipped with the default FC target personality.
- Onboard UTA/UTA2 ports on new controllers are configured before shipment to have the personality you request.

Attention: If your system has storage disks, you must enter the commands in this section at the cluster prompt unless directed to enter maintenance mode. If you have a VSeries system or have FlexArray Virtualization Software and are connected to storage arrays, you must enter commands in this section at the maintenance mode prompt. You must be in maintenance mode to configure UTA/UTA2 ports.

Steps

1. Check how the ports are currently configured entering on of the following commands on node3:

If the system…	Then…
Has storage disks	`system node hardware unified-connect show`
Is a V-Series system or has FlexArray Virtualization Software and is connected to storage arrays	`ucadmin show`

The system displays output similar to the following examples:

```
cluster1::> system node hardware unified-connect show

                 Current  Current    Pending  Pending  Admin
Node  Adapter    Mode     Type       Mode     Type     Status
----  -------    -------  ---------  -------  -------  ------
f-a   0e         fc       initiator  -        -        online
f-a   0f         fc       initiator  -        -        online
f-a   0g         cna      target     -        -        online
f-a   0h         cna      target     -        -        online
f-b   0e         fc       initiator  -        -        online
f-b   0f         fc       initiator  -        -        online
f-b   0g         cna      target     -        -        online
f-b   0h         cna      target     -        -        online
12 entries were displayed.
```

```
*> ucadmin show
          Current  Current    Pending  Pending  Admin
Adapter   Mode     Type       Mode     Type     Status
-------   -------  ---------  -------  -------  ------
0e        fc       initiator  -        -        online
0f        fc       initiator  -        -        online
0g        cna      target     -        -        online
0h        cna      target     -        -        online
0e        fc       initiator  -        -        online
0f        fc       initiator  -        -        online
0g        cna      target     -        -        online
0h        cna      target     -        -        online
*>
```

2. If the current SFP+ module does not match the desired use, replace it with the correct SFP+ module.

   Contact your NetApp representative to obtain the correct SFP+ module.

3. Examine the output of the `system node hardware unified-connect show` or `ucadmin show` command to determine whether the UTA/UTA2 ports have the personality you want.

4. Take one of the following actions:

If the UTA/UTA2 ports…	Then…
Do not have the personality that you want	Go to Step 5.
Have the personality that you want	Skip Step 5 through Step 12 and go to Step 13.

5. Take one of the following actions:

If the system…	Then…
Has storage disks and is running clustered Data ONTAP 8.3	Boot node3 and enter maintenance mode: `boot_ontap maint`
Is a V-Series system or has FlexArray Virtualization Software and is connected to storage arrays	Go to Step 6. You should already be in maintenance mode.

6. Take one of the following actions:

If you are configuring…	Then…
Ports on a UTA/UTA2 card	Go to Step 7.
Onboard UTA/UTA2 ports	Skip Step 7 and go to Step 8.

7. If the adapter is in initiator mode, and if the UTA/UTA2 port is online, take the UTA/UTA2 port offline:

   `storage disable adapter <adapter_name>`

   Adapters in target mode are automatically offline in maintenance mode.

8. If the current configuration does not match the desired use, change the configuration as needed:

   `ucadmin modify -m fc|cna -t initiator|target <adapter_name>`

   - `-m` is the personality mode, `fc` or `cna`.
   - `-t` is the FC4 type, `target` or `initiator`.

   > You need to use the FC initiator for tape drives, FlexArray Virtualization systems, and MetroCluster configurations. You need to use the FC target for SAN clients.

9. Verify the settings:

   `ucadmin show`

10. Verify the settings:

If the system…	Then…

Has storage disks	a. Stop the system:
	
	`halt`
	
	The system stops at the boot environment prompt.
	
	b. Enter the following command:
	
	`boot_ontap`

If the system…	Then…
Is a V-Series system or has FlexArray Virtualization Software and is connected to storage arrays	Reboot to maintenance mode: `boot_netapp maint`

11. Verify the settings:

If the system…	Then…
Has storage disks	`system node hardware unified-connect show`
Is a V-Series or has FlexArray Virtualization Software and is connected to storage arrays	`ucadmin show`

The output in the following examples show that the FC4 type of adapter "1b" is changing to `initiator` and that the mode of adapters "2a" and "2b" is changing to `cna`:

```
cluster1::> system node hardware unified-connect show

                Current  Current    Pending  Pending      Admin
Node  Adapter  Mode     Type       Mode     Type         Status
----  -------  -------  ---------  -------  -----------  ------
f-a   1a       fc       initiator  -        -            online
f-a   1b       fc       target     -        initiator    online
f-a   2a       fc       target     cna      -            online
f-a   2b       fc       target     cna      -            online

4 entries were displayed.
```

```
*> ucadmin show
         Current  Current    Pending  Pending    Admin
Adapter  Mode     Type       Mode     Type       Status
-------  -------  ---------  -------  ---------  ------
1a       fc       initiator  -        -          online
1b       fc       target     -        initiator  online
2a       fc       target     cna      -          online
2b       fc       target     cna      -          online
*>
```

12. Place any target ports online by entering one of the following commands, once for each port:

If the system…	Then…
Has storage disks	`network fcp adapter modify -node <node_name> -adapter <adapter_name> -state up`

If the system…	Then…
Is a V-Series system or has FlexArray Virtualization Software and is connected to storage arrays	`fcp config <adapter_name> up`

13. Cable the port.
14. Take one of the following actions:

If the system…	Then…
Has storage disks	Go to Map ports from node1 to node3.
Is a V-series system or has FlexArray Virtualization Software and is connected to storage arrays	Return to *Install and boot node3* and resume at Step 7.

Map ports from node1 to node3

You must make sure that the physical ports on node1 map correctly to the physical ports on node3, which will let node3 communicate with other nodes in the cluster and with the network after the upgrade.

Before you begin

You must already have information about the ports on the new nodes from the *Hardware Universe*. (Go to References to link to the *Hardware Universe*). You use the information later in this section and in Map ports from node2 to node4.

The software configuration of node3 must match the physical connectivity of node3, and IP connectivity must be restored before you continue with the upgrade.

About this task

Port settings might vary, depending on the model of the nodes.

Steps

1. Perform the following steps to verify if the setup is a two-node switchless cluster:
   a. Set the privilege level to advanced:

      ```
      set -privilege advanced
      ```

   b. Verify if the setup is a two-node switchless cluster:

      ```
      network options switchless-cluster show
      ```

      For example:

      ```
      cluster::*> network options switchless-cluster show
      Enable Switchless Cluster: false/true
      ```

      The value of this command must match the physical state of the system.

c. Return to the administration privilege level:

```
set -privilege admin
```

2. Make the following changes:

a. Modify ports that will be part of Cluster broadcast domain:

```
network port modify -node <node_name> -port <port_name> -mtu 9000 -ipspace
Cluster
```

This example adds Cluster port e1b on "node1":

```
network port modify -node node1 -port e1b -ipspace Cluster -mtu 9000
```

b. Migrate the cluster LIFs to the new ports, once for each LIF:

```
network interface migrate -vserver <Vserver_name> -lif <lif_name> -source
-node <node1> -destination-node <node1> -destination-port <port_name>
```

When all cluster LIFs are migrated and cluster communication is established, the cluster should come into quorum.

c. Modify the home port of the Cluster LIFs:

```
network interface modify -vserver Cluster -lif <lif_name> –home-port
<port_name>
```

d. Remove the old ports from the Cluster broadcast domain:

```
network port broadcast-domain remove-ports -ipspace Cluster -broadcast
-domain Cluster -ports <node1:port>
```

e. Display the health state of node1 and node3:

```
cluster show -node <node1> -fields health
```

f. Each cluster LIF must be listening on port 7700. Verify that the cluster LIFs are listening on port 7700:

```
::> network connections listening show -vserver Cluster
```

Port 7700 listening on cluster ports is the expected outcome as shown in the following example for a two-node cluster:

```
Cluster::> network connections listening show -vserver Cluster
Vserver Name     Interface Name:Local Port     Protocol/Service
---------------- ----------------------------  -------------------
Node: NodeA
Cluster          NodeA_clus1:7700               TCP/ctlopcp
Cluster          NodeA_clus2:7700               TCP/ctlopcp
Node: NodeB
Cluster          NodeB_clus1:7700               TCP/ctlopcp
Cluster          NodeB_clus2:7700               TCP/ctlopcp
4 entries were displayed.
```

g. If necessary, for each cluster LIF that is not listening on port 7700, set the administrative status of the LIF to `down` and then `up`:

```
::> net int modify -vserver Cluster -lif <cluster-lif> -status-admin down;
net int modify -vserver Cluster -lif <cluster-lif> -status-admin up
```

Repeat substep (f) to verify that the cluster LIF is now listening on port 7700.

3. Modify the broadcast domain memberships of physical ports hosting data LIFs.

a. List the reachability status of all ports:

```
network port reachability show
```

b. Repair the reachability of the physical ports, followed by VLAN ports, by running the following command on each port, one port at a time:

```
reachability repair -node <node_name> -port <port_name>
```

A warning like the following is expected. Review and enter `y` or `n` as appropriate:

```
WARNING: Repairing port "node_name:port" might cause it to move into
a different broadcast domain, which can cause LIFs to be re-homed
away from the port. Are you sure you want to continue? {y|n}:
```

c. To enable ONTAP to complete the repair, wait for about a minute after running the `reachability repair` command on the last port.

d. List all broadcast domains on the cluster:

```
broadcast-domain show
```

e. As the reachability repair is performed, ONTAP attempts to place the ports in the correct broadcast domains. However, if a port's reachability cannot be determined and does not correspond to any of the existing broadcast domains, ONTAP will create new broadcast domains for these ports. As required, you can delete the newly created broadcast domains if all their member ports will become member ports of the interface groups. Delete broadcast domains:

```
broadcast-domain delete -broadcast-domain <broadcast_domain>
```

f. Review the interface group configuration, and as required, add or delete member ports.

Add member ports to interface group ports:

```
ifgrp add-port -node <node_name> -ifgrp <ifgrp_port> -port <port_name>
```

Remove member ports from interface group ports:

```
ifgrp remove-port -node <node_name> -ifgrp <ifgrp_port> -port <port_name>
```

g. Delete and re-create VLAN ports as needed. Delete VLAN ports:

```
vlan delete -node <node_name> -vlan-name <vlan_port>_
```

Create VLAN ports:

```
vlan create -node <node_name> -vlan-name<vlan_port>
```

Depending on the complexity of the networking configuration of the system being upgraded, you might be required to repeat Substeps (a) to (g) until all ports are placed correctly where needed.

4. If there are no VLANs configured on the system, go to Step 5. If there are VLANs configured, restore displaced VLANs that were previously configured on ports that no longer exist or were configured on ports that were moved to another broadcast domain.

a. Display the displaced VLANs:

```
displaced-vlans show
```

b. Restore the displaced VLANs to the desired destination port:

```
displaced-vlans restore -node <node_name> -port <port_name> -destination
-port <destination_port>
```

c. Verify that all displaced VLANs have been restored:

```
displaced-vlans show
```

d. VLANs are automatically placed into the appropriate broadcast domains about a minute after they are created. Verify that the restored VLANs have been placed into the appropriate broadcast domains:

```
network port reachability show
```

5. Starting with ONTAP 9.8, ONTAP will automatically modify the home ports of LIFs if the ports are moved between broadcast domains during the network port reachability repair procedure. If a LIF's home port was moved to another node, or is unassigned, that LIF will be presented as a displaced LIF. Restore the home ports of displaced LIFs whose home ports either no longer exist or were relocated to another node.

a. Display the LIFs whose home ports might have moved to another node or no longer exist:

```
displaced-interface show
```

b. Restore the home port of each LIF:

```
displaced-interface restore -vserver <Vserver_name> -lif-name <LIF_name>
```

c. Verify that all LIF home ports have been restored:

```
displaced-interface show
```

When all ports are correctly configured and added to the correct broadcast domains, the `network port reachability show` command should report the reachability status as "ok" for all connected ports, and the status as "no-reachability" for ports with no physical connectivity. If any ports are reporting a status other than these two, repair the reachability as outlined in Step 3.

6. Verify that all LIFs are administratively up on ports belonging to the correct broadcast domains.

a. Check for any LIFs that are administratively down:

```
network interface show -vserver <Vserver_name> -status-admin down
```

b. Check for any LIFs that are operationally down:

```
network interface show -vserver <Vserver_name> -status-oper down
```

c. Modify any LIFs that need to be modified to have a different home port:

```
network interface modify -vserver <Vserver_name> -lif <LIF_name> -home-port
<home_port>
```

> For iSCSI LIFs, modification of the home port requires the LIF to be administratively down.

d. Revert LIFs that are not home to their respective home ports:

```
network interface revert *
```

Move NAS data LIFs owned by node1 from node2 to node3 and verify SAN LIFs on node3

Before you relocate aggregates from node2 to node3, you must move the NAS data LIFs belonging to node1 that are currently on node2 from node2 to node3. You also must verify the SAN LIFs on node3.

About this task

Remote LIFs handle traffic to SAN LUNs during the upgrade procedure. Moving SAN LIFs is not necessary for cluster or service health during the upgrade. SAN LIFs are not moved unless they need to be mapped to new ports. You will verify that the LIFs are healthy and located on appropriate ports after you bring node3 online.

Steps

1. List all the NAS data LIFs not owned by node2 by entering the following command on either node and capturing the output:

```
network interface show -role data -curr-node <node2> -is-home false -home-node
<node3>
```

2. If the cluster is configured for SAN LIFs, record the SAN LIFs `adapter` and `switch-port` configuration information in this worksheet for use later in the procedure.

   a. List the SAN LIFs on node2 and examine the output:

      ```
      network interface show -data-protocol fc*
      ```

      The system returns output similar to the following example:

      ```
      cluster1::> net int show -data-protocol fc*
        (network interface show)
                  Logical     Status     Network            Current
      Current Is
      Vserver     Interface   Admin/Oper Address/Mask       Node
      Port    Home
      ----------  ----------  ---------- ------------------ -------------
      ------- ----
      svm2_cluster1
                  lif_svm2_cluster1_340
                              up/up      20:02:00:50:56:b0:39:99
                                                            cluster1-01
      1b      true
                  lif_svm2_cluster1_398
                              up/up      20:03:00:50:56:b0:39:99
                                                            cluster1-02
      1a      true
                  lif_svm2_cluster1_691
                              up/up      20:01:00:50:56:b0:39:99
                                                            cluster1-01
      1a      true
                  lif_svm2_cluster1_925
                              up/up      20:04:00:50:56:b0:39:99
                                                            cluster1-02
      1b      true
      4 entries were displayed.
      ```

   b. List the existing configurations and examine the output:

      ```
      fcp adapter show -fields switch-port,fc-wwpn
      ```

      The system returns output similar to the following example:

```
cluster1::> fcp adapter show -fields switch-port,fc-wwpn
  (network fcp adapter show)
node          adapter  fc-wwpn                  switch-port
------------  -------  -----------------------  -------------
cluster1-01   0a       50:0a:09:82:9c:13:38:00  ACME Switch:0
cluster1-01   0b       50:0a:09:82:9c:13:38:01  ACME Switch:1
cluster1-01   0c       50:0a:09:82:9c:13:38:02  ACME Switch:2
cluster1-01   0d       50:0a:09:82:9c:13:38:03  ACME Switch:3
cluster1-01   0e       50:0a:09:82:9c:13:38:04  ACME Switch:4
cluster1-01   0f       50:0a:09:82:9c:13:38:05  ACME Switch:5
cluster1-01   1a       50:0a:09:82:9c:13:38:06  ACME Switch:6
cluster1-01   1b       50:0a:09:82:9c:13:38:07  ACME Switch:7
cluster1-02   0a       50:0a:09:82:9c:6c:36:00  ACME Switch:0
cluster1-02   0b       50:0a:09:82:9c:6c:36:01  ACME Switch:1
cluster1-02   0c       50:0a:09:82:9c:6c:36:02  ACME Switch:2
cluster1-02   0d       50:0a:09:82:9c:6c:36:03  ACME Switch:3
cluster1-02   0e       50:0a:09:82:9c:6c:36:04  ACME Switch:4
cluster1-02   0f       50:0a:09:82:9c:6c:36:05  ACME Switch:5
cluster1-02   1a       50:0a:09:82:9c:6c:36:06  ACME Switch:6
cluster1-02   1b       50:0a:09:82:9c:6c:36:07  ACME Switch:7
16 entries were displayed
```

3. Take one of the following actions:

If node1…	Then…
Had interface groups or VLANs configured	Go to Step 4.
Did not have interface groups or VLANs configured	Skip Step 4 and go to Step 5.

4. Perform the following substeps to migrate any NAS data LIFs hosted on interface groups and VLANs that were originally on node1 from node2 to node3:

   a. Migrate any data LIFs hosted on node2 that previously belonged to node1 on an interface group to a port on node3 that is capable of hosting LIFs on the same network by entering the following command, once for each LIF:

   ```
   network interface migrate -vserver <vserver_name> -lif <LIF_name>
   -destination-node <node3> -destination-port <netport|ifgrp>
   ```

   b. Modify the home port and home node of the LIF in Substep a to the port and node currently hosting the LIFs by entering the following command, once for each LIF:

   ```
   network interface modify -vserver <vserver_name> -lif <LIF_name> -home-node
   <node3> -home-port <netport|ifgrp>
   ```

   c. Migrate any data LIF hosted on node2 that previously belonged to node1 on a VLAN port to a port on node3 that is capable of hosting LIFs on the same network by entering the following command, once

for each LIF:

```
network interface migrate -vserver <vserver_name> -lif <LIF_name>
-destination-node <node3> -destination-port <netport|ifgrp>
```

d. Modify the home port and home node of the LIFs in Substep c to the port and node currently hosting the LIFs by entering the following command, once for each LIF:

```
network interface modify -vserver <vserver_name> -lif <LIF_name> -home-node
<node3> -home-port <netport|ifgrp>
```

5. Take one of the following actions:

If the cluster is configured for…	Then…
NAS	Complete Step 6 and Step 7, skip Step 8, and complete Step 9 through Step 12.
SAN	Disable all the SAN LIFs on the node to take them down for the upgrade: `network interface modify -vserver <vserver_name> -lif <LIF_name> -home-node <node_to_upgrade> -home-port <netport|ifgrp> -status-admin down`

6. If you have data ports that are not the same on your platforms, add the ports to the broadcast domain:

```
network port broadcast-domain add-ports -ipspace <IPspace_name> -broadcast
-domain mgmt -ports <node:port>
```

The following example adds port "e0a" on node "8200-1" and port "e0i" on node "8060-1" to broadcast domain "mgmt" in the IPspace "Default":

```
cluster::> network port broadcast-domain add-ports -ipspace Default
-broadcast-domain mgmt -ports 8200-1:e0a, 8060-1:e0i
```

7. Migrate each NAS data LIF to node3 by entering the following command, once for each LIF:

```
network interface migrate -vserver <vserver_name> -lif <LIF_name> -destination
-node <node3> -destination-port <netport|ifgrp>
```

8. Make sure that the data migration is persistent:

```
network interface modify -vserver <vserver_name> -lif <LIF_name>-home-port
<netport|ifgrp> -home-node <node3>
```

9. Confirm that the SAN LIFs are on the correct ports on node3:

a. Enter the following command and examine its output:

```
network interface show -data-protocol iscsi|fcp -home-node <node3>
```

The system returns output similar to the following example:

```
cluster::> net int show -data-protocol iscsi|fcp -home-node node3
              Logical     Status      Network             Current
Current  Is
 Vserver      Interface   Admin/Oper  Address/Mask        Node
Port     Home
 -----------  ----------  ----------  ------------------
-------------  -------  ----
 vs0
              a0a         up/down     10.63.0.53/24       node3
a0a      true
              data1       up/up       10.63.0.50/18       node3
e0c      true
              rads1       up/up       10.63.0.51/18       node3
e1a      true
              rads2       up/down     10.63.0.52/24       node3
e1b      true
 vs1
              lif1        up/up       172.17.176.120/24   node3
e0c      true
              lif2        up/up       172.17.176.121/24   node3
e1a      true
```

b. Verify that the new and `adapter` and `switch-port` configurations are correct by comparing the output from the `fcp adapter show` command with the configuration information that you recorded in the worksheet in Step 2.

   List the new SAN LIF configurations on node3:

   `fcp adapter show -fields switch-port,fc-wwpn`

   The system returns output similar to the following example:

```
cluster1::> fcp adapter show -fields switch-port,fc-wwpn
  (network fcp adapter show)
node        adapter fc-wwpn                 switch-port
----------- ------- ----------------------- -------------
cluster1-01 0a      50:0a:09:82:9c:13:38:00 ACME Switch:0
cluster1-01 0b      50:0a:09:82:9c:13:38:01 ACME Switch:1
cluster1-01 0c      50:0a:09:82:9c:13:38:02 ACME Switch:2
cluster1-01 0d      50:0a:09:82:9c:13:38:03 ACME Switch:3
cluster1-01 0e      50:0a:09:82:9c:13:38:04 ACME Switch:4
cluster1-01 0f      50:0a:09:82:9c:13:38:05 ACME Switch:5
cluster1-01 1a      50:0a:09:82:9c:13:38:06 ACME Switch:6
cluster1-01 1b      50:0a:09:82:9c:13:38:07 ACME Switch:7
cluster1-02 0a      50:0a:09:82:9c:6c:36:00 ACME Switch:0
cluster1-02 0b      50:0a:09:82:9c:6c:36:01 ACME Switch:1
cluster1-02 0c      50:0a:09:82:9c:6c:36:02 ACME Switch:2
cluster1-02 0d      50:0a:09:82:9c:6c:36:03 ACME Switch:3
cluster1-02 0e      50:0a:09:82:9c:6c:36:04 ACME Switch:4
cluster1-02 0f      50:0a:09:82:9c:6c:36:05 ACME Switch:5
cluster1-02 1a      50:0a:09:82:9c:6c:36:06 ACME Switch:6
cluster1-02 1b      50:0a:09:82:9c:6c:36:07 ACME Switch:7
16 entries were displayed
```

If a SAN LIF in the new configuration is not on an adapter that is still attached to the same `switch-port`, it might cause a system outage when you reboot the node.

c. If node3 has any SAN LIFs or groups of SAN LIFs that are on a port that did not exist on node1 or that need to be mapped to a different port, move them to an appropriate port on node3 by completing the following substeps:

   i. Set the LIF status to "down":

   ```
   network interface modify -vserver <vserver_name> -lif <LIF_name> -status
   -admin down
   ```

   ii. Remove the LIF from the port set:

   ```
   portset remove -vserver <vserver_name> -portset <portset_name> -port-name
   <port_name>
   ```

   iii. Enter one of the following commands:

   - Move a single LIF:

     ```
     network interface modify -vserver <vserver_name> -lif <LIF_name> -home
     -port <new_home_port>
     ```

   - Move all the LIFs on a single nonexistent or incorrect port to a new port:

     ```
     network interface modify {-home-port <port_on_node1> -home-node
     ```

```
<node1> -role data} -home-port <new_home_port_on_node3>
```

- Add the LIFs back to the port set:

```
portset add -vserver <vserver_name> -portset <portset_name> -port-name
<port_name>
```

> You must move SAN LIFs to a port that has the same link speed as the original port.

10. Modify the status of all LIFs to "up" so the LIFs can accept and send traffic on the node:

```
network interface modify -home-port <port_name> -home-node <node3> -lif data
-status-admin up
```

11. Enter the following command on either node and examine its output to verify that LIFs have been moved to the correct ports and that the LIFs have the status of "up" by entering the following command on either node and examining the output:

```
network interface show -home-node <node3> -role data
```

12. If any LIFs are down, set the administrative status of the LIFs to "up" by entering the following command, once for each LIF:

```
network interface modify -vserver <vserver_name> -lif <LIF_name> -status-admin
up
```

13. Send a post-upgrade AutoSupport message to NetApp for node1:

```
system node autosupport invoke -node <node3> -type all -message "node1
successfully upgraded from <platform_old> to <platform_new>"
```

Worksheet: Information to record before moving NAS data LIFs to node3

To help verify that you have the correct configuration after moving SAN LIFs from node2 to node3, you can use the following worksheet to record the `adapter` and `switch-port` information for each LIF.

Record the LIF `adapter` information from the `network interface show -data-protocol fc*` command output and the `switch-port` information from the `fcp adapter show -fields switch-port,fc-wwpn` command output for node2.

After you complete the migration to node3, record the LIF `adapter` and `switch-port` information for the LIFs on node3 and verify that each LIF is still connected to the same `switch-port`.

Node2			**Node3**		
LIF	`adapter`	`switch-port`	**LIF**	`adapter`	`switch-port`

Node2			Node3		

Relocate non-root aggregates from node2 to node3

Before you can replace node2 with node4, you must send an AutoSupport message for node2 and then relocate the non-root aggregates that are owned by node2 to node3.

Steps

1. Send an AutoSupport message to NetApp for node2:

   ```
   system node autosupport invoke -node <node2> -type all -message "Upgrading
   <node2> from <platform_old> to <platform_new>"
   ```

2. Verify that the AutoSupport message was sent:

   ```
   system node autosupport show -node <node2> -instance
   ```

   The fields "Last Subject Sent:"" and "Last Time Sent:"" contain the message title of the last message that was sent and the time when the message was sent.

3. Relocate the non-root aggregates:

   a. Set the privilege level to advanced:

      ```
      set -privilege advanced
      ```

   b. List the aggregates that are owned by node2:

      ```
      storage aggregate show -owner-name <node2>
      ```

   c. Start aggregate relocation:

      ```
      storage aggregate relocation start -node <node2> -destination <node3>
      -aggregate-list * -ndo-controller-upgrade true
      ```

      The command locates only non-root aggregates.

   d. When prompted, enter `y`.

      Relocation occurs in the background. It can take anywhere from a few seconds to a couple of minutes to relocate an aggregate. The time includes both client outage and non-outage portions. The command does not relocate any offline or restricted aggregates.

   e. Return to the admin privilege level:

      ```
      set -privilege admin
      ```

4. Verify the relocation status of node2:

   `storage aggregate relocation show -node <node2>`

   The output will display "Done" for an aggregate after it has been relocated.

   > You must wait until all of the aggregates that are owned by node2 have been relocated to node3 before proceeding to the next step.

5. Take one of the following actions:

If relocation of…	Then…
All aggregates was successful	Go to Step 6.

If relocation of…	Then…

Any aggregates failed, or was vetoed	a. Display a detailed status message:
	`storage aggregate show -instance`
	You can also check the EMS logs to see the corrective action that is needed.
	Note: The `event log show` command lists any errors that have occurred.
	b. Perform the corrective action.
	c. Set the privilege level to advanced:
	`set -privilege advanced`
	d. Relocate any failed or vetoed aggregates:
	`storage aggregate relocation start -node <node2> -destination <node3> -aggregate-list * -ndo-controllerupgrade true`
	e. When prompted, enter `y`.
	f. Return to the admin privilege level:
	`set -privilege admin`
	If necessary, you can force the relocation by using one of the following methods:
	• By overriding veto checks:
	`storage aggregate relocation start -override -vetoes true -ndo-controller-upgrade`
	• By overriding destination checks:
	`storage aggregate relocation start -override -destination-checks true -ndocontroller-upgrade`
	For more information about the storage aggregate relocation commands, go to References to link to *Disk and aggregate management with the CLI* and the *ONTAP 9 Commands: Manual Page Reference*.

6. Verify that all of the non-root aggregates are online on node3:

`storage aggregate show -node <node3> -state offline -root false`

If any aggregates have gone offline or have become foreign, you must bring them online, once for each

aggregate:

```
storage aggregate online -aggregate <aggr_name>
```

7. Verify that all of the volumes are online on node3:

   ```
   volume show -node <node3> -state offline
   ```

   If any volumes are offline on node3, you must bring them online, once for each volume:

   ```
   volume online -vserver <Vserver-name> -volume <volume-name>
   ```

8. Verify that node2 does not own any online non-root aggregates:

   ```
   storage aggregate show -owner-name <node2> -ha-policy sfo -state online
   ```

   The command output should not display online non-root aggregates because all of the non-root online aggregates have already been relocated to node3.

Move NAS data LIFs owned by node2 to node3

After you relocate the aggregates from node2 to node3, you need to move the NAS data LIFs owned by node2 to node3.

About this task

Remote LIFs handle traffic to SAN LUNs during the upgrade procedure. Moving SAN LIFs is not necessary for cluster or service health during the upgrade. SAN LIFs are not moved unless they need to be mapped to new ports. You must verify that the LIFs are healthy and located on the appropriate ports after you move the LIFs from node3 to node4 and bring node4 online.

Steps

1. List all the NAS data LIFs owned by node2 by entering the following command on either node and capturing the output:

   ```
   network interface show -data-protocol nfs|cifs -home-node <node2>
   ```

   The following example shows the command output for node2:

```
cluster::> network interface show -data-protocol nfs|cifs -home-node
node2
              Logical     Status      Network             Current
Current  Is
 Vserver      Interface   Admin/Oper  Address/Mask        Node     Port
Home
 -----------  ----------  ----------  ------------------  -------
-------  ----
 vs0
              a0a         up/down     10.63.0.53/24       node2    a0a
true
              data1       up/up       10.63.0.50/18       node2    e0c
true
              rads1       up/up       10.63.0.51/18       node2    e1a
true
              rads2       up/down     10.63.0.52/24       node2    e1b
true
 vs1
              lif1        up/up       172.17.176.120/24   node2    e0c
true
              lif2        up/up       172.17.176.121/24   node2    e1a
true
```

2. Take one of the following actions:

If node2…	Then…
Has interface groups or VLANs configured	Go to Step 3.
Does not have interface groups or VLANs configured	Skip Step 3 and go to Step 4.

3. Take the following steps to migrate NAS data LIFs hosted on interface groups and VLANs on node2:
   a. Migrate any data LIFs hosted on an interface group on node2 to a port on node3 that is capable of hosting LIFs on the same network by entering the following command, once for each LIF:

      ```
      network interface migrate -vserver <Vserver_name> -lif <LIF_name>
      -destination-node <node3> -destination-port <netport|ifgrp>
      ```

   b. Modify the home port and home node of the LIFs in Substep a to the port and node currently hosting the LIFs by entering the following command, once for each node:

      ```
      network interface modify -vserver <Vserver_name> -lif <LIF_name> -home-node
      <node3> -homeport <netport|ifgrp>
      ```

   c. Migrate any LIFs hosted on VLANs on node2 to a port on node3 that is capable of hosting LIFs on the same network as that of the VLANs by entering the following command, once for each LIF:

```
network interface migrate -vserver <Vserver_name> -lif <LIF_name>
-destination-node <node3> -destination-port <netport|ifgrp>
```

d. Modify the home port and home node of the LIFs in Substep c to the port and node currently hosting the LIFs by entering the following command, once for each LIF:

```
network interface modify -vserver <Vserver_name> -lif <LIF_name> -home-node
<node3> -homeport <netport|ifgrp>
```

4. Take one of the following actions:

If the cluster is configured for…	Then…
NAS	Complete Step 5 through Step 8.
SAN	Skip Step 5 through Step 8 and then complete Step 9.
Both NAS and SAN	Complete Step 5 through Step 9.

5. If you have data ports that are not the same on your platforms, add the ports to the broadcast domain:

```
network port broadcast-domain add-ports -ipspace <IPspace_name> -broadcast
-domain mgmt -ports <node:port>
```

The following example adds port "e0a" on node "6280-1" and port "e0i" on node "8060-1" to broadcast domain "mgmt" in the IPspace "Default":

```
cluster::> network port broadcast-domain add-ports -ipspace Default
           -broadcast-domain mgmt -ports 6280-1:e0a, 8060-1:e0i
```

6. Migrate each NAS data LIF to node3 by entering the following command, once for each LIF:

```
network interface migrate -vserver <Vserver_name> -lif <LIF_name> -destination
-node <node3> -destination-port <netport|ifgrp>
```

7. Verify that NAS LIFs have been moved to the correct ports and that the LIFs have the status of up by entering the following command on either node and examining the output:

```
network interface show -curr-node <node3> -data-protocol cifs|nfs
```

8. If any LIFs are down, set the administrative status of the LIFs to "up" by entering the following command, once for each LIF:

```
network interface modify -vserver <Vserver_name> -lif <LIF_name> -status-admin
up
```

9. If you have interface groups or VLANs configured, complete the following substeps:

a. Remove the VLANs from the interface groups:

```
network port vlan delete -node <node_name> -port <ifgrp> -vlan-id <VLAN_ID>
```

b. Enter the following command and examine its output to determine if there are any interface groups configured on the node:

```
network port ifgrp show -node <node_name> -ifgrp <ifgrp_name> -instance
```

The system displays interface group information for the node, as shown in the following example:

```
cluster::> network port ifgrp show -node node2 -ifgrp a0a -instance
                  Node: node2
 Interface Group Name: a0a
Distribution Function: ip
        Create Policy: multimode_lacp
          MAC Address: MAC_address
    ort Participation: partial
        Network Ports: e2c, e2d
             Up Ports: e2c
           Down Ports: e2d
```

c. If any interface groups are configured on the node, record the names of the interface groups and the ports assigned to them and then delete the ports by entering the following command, once for each port:

```
network port ifgrp remove-port -node <node_name> -ifgrp <ifgrp_name> -port
<port_name>
```

Stage 4. Record information and retire node2

Stage 4. Record node2 information and retire node2

During Stage 4, you record node2 information and then retire node2.

Steps

1. Record node2 information
2. Retire node2

Record node2 information

Before you can shut down and retire node2, you must record information about its cluster network, management, and FC ports as well as its NVRAM System ID. You need that information later in the procedure when you map node2 to node4 and reassign disks.

Steps

1. Find the cluster network, node-management, intercluster, and cluster-management ports on node2:

   ```
   network interface show -curr-node <node_name> -role
   cluster,intercluster,nodemgmt,cluster-mgmt
   ```

   The system displays the LIFs for that node and other nodes in the cluster, as shown in the following example:

```
cluster::> network interface show -curr-node node2 -role
cluster,intercluster,node-mgmt,cluster-mgmt
         Logical     Status     Network            Current     Current
Is
Vserver  Interface   Admin/Oper Address/Mask       Node        Port
Home
-------- ----------  ---------- ------------------ ----------  -------
----
node2
         intercluster up/up     192.168.1.202/24   node2       e0e
true
         clus1        up/up     169.254.xx.xx/24   node2       e0a
true
         clus2        up/up     169.254.xx.xx/24   node2       e0b
true
         mgmt1        up/up     192.168.0.xxx/24   node2       e0c
true
4 entries were displayed.
```

Your system might not have intercluster LIFs. You will have a cluster management LIF only on one node of a node pair. A cluster management LIF was displayed in the example output of Step 1 in *Record node1 port information*.

2. Capture the information in the output to use in the section Map ports from node2 to node4.

   The output information is required to map the new controller ports to the old controller ports.

3. Determine physical ports on node2:

   `network port show -node <node_name> -type physical +`

   `node_name` is the node which is being migrated.

   The system displays the physical ports on node2, as shown in the following example:

```
cluster::> network port show -node node2 -type physical

                                                                  Speed
(Mbps)
Node   Port      IPspace      Broadcast Domain Link   MTU    Admin/Oper
------ --------- ------------ ---------------- ----- ------- -----------
node2
       e0M       Default      IP_address       up       1500  auto/100
       e0a       Default      -                up       1500  auto/1000
       e0b       Default      -                up       1500  auto/1000
       e1a       Cluster      Cluster          up       9000  auto/10000
       e1b       Cluster      Cluster          up       9000  auto/10000
5 entries were displayed.
```

4. Record the ports and their broadcast domains.

   The broadcast domains will need to be mapped to the ports on the new controller later in the procedure.

5. Determine the FC ports on node2:

   `network fcp adapter show`

   The system displays the FC ports on the node2, as shown in the following example:

```
cluster::> network fcp adapter show -node node2
                     Connection  Host
Node         Adapter Established Port Address
------------ ------- ----------- ------------
node2
             0a      ptp         11400
node2
             0c      ptp         11700
node2
             6a      loop        0
node2
             6b      loop        0
4 entries were displayed.
```

6. Record the ports.

   The output information is required to map the new FC ports on the new controller later in the procedure.

7. If you have not done so earlier, check whether there are interface groups or VLANs configured on node2:

   `ifgrp show`

   `vlan show`

You will use the information in the section Map ports from node2 to node4.

8. Take one of the following actions:

If you…	Then…
Recorded NVRAM System ID number in Prepare the nodes for upgrade	Go to Retire node2.
Did not record the NVRAM System ID number in Prepare the nodes for upgrade	Complete Step 9 and Step 10 and then go to the next section, Retire node2.

9. Display the attributes of node2:

```
system node show -instance -node node2
```

```
cluster::> system node show -instance -node node2
                              ...
                  NVRAM System ID: system_ID
                              ...
```

10. Record the NVRAM System ID to use in the section Install and boot node4.

Retire node2

To retire node2, you must shut node2 down correctly and remove it from the rack or chassis. If the cluster is in a SAN environment, you also must delete the SAN LIFs.

Steps

1. Take one of the following actions:

If the cluster is…	Then…
A two-node cluster	Go to Step 2.
A cluster with more than two nodes	Go to Step 9.

2. Access the advanced privilege level by entering the following command on either node:

```
set -privilege advanced
```

3. Verify that the cluster HA has been disabled by entering the following command and examining its output:

```
cluster ha show
```

The system displays the following message:

```
High Availability Configured: false
```

4. Check if node2 currently holds epsilon by entering the following command and examining its output:

   `cluster show`

   The following example shows that node2 holds epsilon:

```
cluster*::> cluster show
Node                 Health  Eligibility   Epsilon
-------------------- ------- ------------  -----------
node1                true    true          false
node2                true    true          true

Warning: Cluster HA has not been configured. Cluster HA must be
configured on a two-node cluster to ensure data access availability in
the event of storage failover. Use the "cluster ha modify -configured
true" command to configure cluster HA.

2 entries were displayed.
```

   If you are upgrading a HA pair in a cluster with multiple HA pairs, you must move epsilon to the node of a HA pair not undergoing a controller upgrade. For example, if you are upgrading nodeA/nodeB in a cluster with the HA pair configuration nodeA/nodeB and nodeC/nodeD, you must move epsilon to nodeC or nodeD.

5. If node2 holds epsilon, mark epsilon as `false` on the node so that it can be transferred to node3:

   `cluster modify -node <node2> -epsilon false`

6. Transfer epsilon to node3 by marking epsilon `true` on node3:

   `cluster modify -node <node3> -epsilon true`

7. Verify if the setup is a two-node switchless cluster:

   `network options switchless-cluster show`

```
cluster::*> network options switchless-cluster show
Enable Switchless Cluster: false/true
```

   The value of this command must match the physical state of the system.

8. Verify if the setup is a two-node switchless cluster:

   `network options switchless-cluster show`

```
cluster::*> network options switchless-cluster show
Enable Switchless Cluster: false/true
```

The value of this command must match the physical state of the system.

9. Return to the admin level:

```
set -privilege admin
```

10. Halt node2 by entering the following command on either controller:
`system node halt -node <node2>`
11. After node2 shuts down completely, remove it from the chassis or the rack. You can decommission node2 after the upgrade is completed. See Decommission the old system.

Stage 5. Install and boot node4

Stage5. Install and boot node4

During Stage 5, you install and boot node4 and map the cluster and node-management ports from node2 to node4. You also move the data LIFs and SAN LIFs owned by node2 from node3 to node4, and relocate node2's aggregates from node3 to node4.

Steps

1. Install and boot node4
2. Set the FC or UTA/UTA2 configuration on node4
3. Map ports from node2 to node4
4. Move NAS data LIFs owned by node2 from node3 to node4 and verify SAN LIFs on node4
5. Relocate node2's non-root aggregates from node3 to node4

Install and boot node4

You must install node4 in the rack, transfer node2 connections to node4, and boot node4. You must also reassign any node2 spares, any disks belonging to root, and any non-root aggregates that were not relocated to node3 earlier.

About this task

You must netboot node4 if it does not have the same version of ONTAP 9 that is installed on node2. After you install node4, boot it from the ONTAP 9 image stored on the web server. You can then download the correct files to the boot media device for subsequent system boots by following the instructions in Prepare for netboot

However, you are not required to netboot node4 if it has the same or later version of Data ONTAP 9 that is installed on node2.

Important information:

- If you are upgrading a V-Series system or a system with FlexArray Virtualization Software that is connected to storage arrays, you need to complete Step 1 through Step 7, leave this section at Step 8 and follow instructions in Set the FC or UTA/UTA2 configuration on node4 as needed, entering the commands in

Maintenance mode. You then need to return to this section and resume the procedure at Step 9.

- However, if you are upgrading a system with storage disks, you need to complete this entire section and then proceed to the section Set the FC or UTA/UTA2 configuration on node4, entering commands at the cluster prompt.

Steps

1. Take one of the following actions:

If node4 will be in …	Then…
A chassis separate from node3	Go to Step 2.
The same chassis with node3	Skip Steps 2 and 3 and go to Step 4.

2. Make sure that node4 has sufficient rack space.

   If node4 is in a separate chassis from node3, you can put node4 in the same location as node2. If node3 and node4 are in the same chassis, then node4 is already in its appropriate rack location.

3. Install node4 in the rack, following the instructions in the *Installation and Setup Instructions* for the node model.
4. Cable node4, moving the connections from node2 to node4.

   The following references help you make proper cable connections. Go to References to link to them.

   - *Installation and Setup Instructions* or *FlexArray Virtualization Installation Requirements and Reference* for the node4 platform
   - The appropriate disk shelf procedure
   - The *High Availability management* documentation

     Cable the following connections:

   - Console (remote management port)
   - Cluster ports
   - Data ports
   - Cluster and node management ports
   - Storage
   - SAN configurations: iSCSI Ethernet and FC switch ports

   > You do not need to move the interconnect card/FC_VI card or interconnect/FC_VI cable connection from node2 to node4 because most platform models have unique interconnect card models.

5. Take one of the following actions:

If node4 is in…	Then…
The same chassis as node3	Go to Step 8.
A chassis separate from node3	Go to Step 6.

6. Turn on the power to node4, and then interrupt the boot by pressing `Ctrl-C` to access the boot environment prompt.

   When you boot node4, you might see the following message:

```
WARNING: The battery is unfit to retain data during a power
         outage. This is likely because the battery is
         discharged but could be due to other temporary
         conditions.
         When the battery is ready, the boot process will
         complete and services will be engaged.
         To override this delay, press 'c' followed by 'Enter'
```

7. If you see the warning message in Step 6, take the following actions:

   a. Check for any console messages that might indicate a problem other than a low NVRAM battery and, if necessary, take any required corrective action.

   b. Allow the battery to charge and the boot process to finish.

   Warning: Do not override the delay. Failure to allow the battery to charge could result in a loss of data.

8. Take one of the following actions:

If your system…	Then…
Has disks and no back-end storage	Skip Step 9 through Step 14 and go to Step 15.
Is a V-Series system or has FlexArray Virtualization Software and is connected to storage arrays	a. Go to the section *Set the FC or UTA/UTA2 configuration on node4* and complete the sections Configure FC ports on node4 and Check and configure UTA/UTA2 ports on node4, as appropriate to your system. b. Return to this section and complete the remaining steps, beginning with Step 9. **Important**: You must reconfigure FC onboard ports, UTA/UTA2 onboard ports, and UTA/UTA2 cards before you boot Data ONTAP on the V-Series system.

9. Add the FC initiator ports of the new node to the switch zones.

   See your storage array and zoning documentation for instructions.

10. Add the FC initiator ports to the storage array as new hosts, mapping the array LUNs to the new hosts.

    See your storage array and zoning documentation for instructions.

11. Modify the World Wide Port Name (WWPN) values in the host or volume groups associated with array LUNs on the storage array.

Installing a new controller module changes the WWPN values associated with each onboard FC port.

12. If your configuration uses switch-based zoning, adjust the zoning to reflect the new WWPN values.
13. Verify that the array LUNs are now visible to node4 by entering the following command and examining its output:

    `sysconfig -v`

    The system displays all the array LUNs that are visible to each of the FC initiator ports. If the array LUNs are not visible, you cannot reassign disks from node2 to node4 later in this section.

14. Press `Ctrl-C` to display the boot menu and select Maintenance mode.
15. At the Maintenance mode prompt, enter the following command:

    `halt`

    The system stops at the boot environment prompt.

16. Configure node4 for ONTAP:

    `set-defaults`

17. If FDE is used in this configuration, the `setenv bootarg.storageencryption.support` variable must be set to `true`, and the `kmip.init.maxwait` variable needs to be set to `off` to avoid a boot loop after the node2 configuration is loaded:

    `setenv bootarg.storageencryption.support true`

    `setenv kmip.init.maxwait off`

18. If the version of ONTAP installed on node4 is the same or later than the version of ONTAP 9 installed on node2, enter the following command:

    `boot_ontap menu`

19. Take one of the following actions:

If the system you are upgrading…	Then…
Does not have the correct or current ONTAP version on node4	Go to Step 20.
Has the correct or current version of ONTAP on node4	Go to Step 25.

20. Configure the netboot connection by choosing one of the following actions.

    You must use the management port and IP address as the netboot connection. Do not use a data LIF IP address or a data outage might occur while the upgrade is being performed.

If Dynamic Host Configuration Protocol (DHCP) is…	Then…
Running	Configure the connection automatically by entering the following command at the boot environment prompt: `ifconfig e0M -auto`
Not running	Manually configure the connection by entering the following command at the boot environment prompt: `ifconfig e0M -addr=<filer_addr> mask=<netmask> -gw=<gateway> dns=<dns_addr> domain=<dns_domain>` `<filer_addr>` is the IP address of the storage system. `<netmask>` is the network mask of the storage system. `<gateway>` is the gateway for the storage system. `<dns_addr>` is the IP address of a name server on your network. `<dns_domain>` is the Domain Name Service (DNS) domain name. If you use this optional parameter, you do not need a fully qualified domain name in the netboot server URL; you need only the server's host name. **Note**: Other parameters might be necessary for your interface. Enter `help ifconfig` at the firmware prompt for details.

21. Perform netboot on node4:

For…	Then…
FAS/AFF8000 series systems	`netboot http://<web_server_ip/path_to_webaccessible_directory>/netboot/kernel`
All other systems	`netboot http://<web_server_ip/path_to_webaccessible_directory/ontap_version>_image.tgz`

The `<path_to_the_web-accessible_directory>` should lead to where you downloaded the `<ontap_version>_image.tgz` in Step 1 in the section *Prepare for netboot*.

Do not interrupt the boot.

22. From the boot menu, select `option (7) Install new software first`.

This menu option downloads and installs the new Data ONTAP image to the boot device.

Disregard the following message:

`"This procedure is not supported for NonDisruptive Upgrade on an HA pair"`

The note applies to nondisruptive upgrades of Data ONTAP, and not upgrades of controllers.

23. If you are prompted to continue the procedure, enter y, and when prompted for the package, enter the URL:

    `http://<web_server_ip/path_to_web-accessible_directory/ontap_version>_image.tgz`

24. Complete the following substeps:

    a. Enter `n` to skip the backup recovery when you see the following prompt:

    ```
    Do you want to restore the backup configuration now? {y|n}
    ```

    b. Reboot by entering `y` when you see the following prompt:

    ```
    The node must be rebooted to start using the newly installed
    software. Do you want to reboot now? {y|n}
    ```

    The controller module reboots but stops at the boot menu because the boot device was reformatted and the configuration data needs to be restored.

25. Select maintenance mode `5` from the boot menu and enter `y` when you are prompted to continue with the boot.

26. Before continuing, go to Set the FC or UTA/UTA2 configuration on node4 to make any necessary changes to the FC or UTA/UTA2 ports on the node. Make the changes recommended in those sections, reboot the node, and go into Maintenance mode.

27. Enter the following command and examine the output to find the system ID of node4:

    `disk show -a`

    The system displays the system ID of the node and information about its disks, as shown in the following example:

```
*> disk show -a
Local System ID: 536881109
DISK         OWNER                      POOL   SERIAL NUMBER   HOME
------------ -------------              -----  -------------
-------------
0b.02.23     nst-fas2520-2(536880939)   Pool0  KPG2RK6F        nst-
fas2520-2(536880939)
0b.02.13     nst-fas2520-2(536880939)   Pool0  KPG3DE4F        nst-
fas2520-2(536880939)
0b.01.13     nst-fas2520-2(536880939)   Pool0  PPG4KLAA        nst-
fas2520-2(536880939)
......
0a.00.0                   (536881109)   Pool0  YFKSX6JG
(536881109)
......
```

28. Reassign node2's spares, disks belonging to the root, and any non-root aggregates that were not relocated to node3 earlier in section Relocate non-root aggregates from node2 to node3:

Disk type…	Run the command…
With shared disks	`disk reassign -s <node2_sysid> -d <node4_sysid> -p <node3_sysid>`
Without shared	`disks disk reassign -s <node2_sysid> -d <node4_sysid>`

For the `<node2_sysid>` value, use the information captured in Step 10 of the *Record node2 information* section. For `<node4_sysid>`, use the information captured in Step 23.

The `-p` option is only required in maintenance mode when shared disks are present.

The `disk reassign` command will reassign only those disks for which `<node2_sysid>` is the current owner.

The system displays the following message:

```
Partner node must not be in Takeover mode during disk reassignment from
maintenance mode.
Serious problems could result!!
Do not proceed with reassignment if the partner is in takeover mode.
Abort reassignment (y/n)? n
```

Enter `n` when asked to abort disk reassignment.

When you are asked to abort disk reassignment, you must answer a series of prompts as shown in the following steps:

a. The system displays the following message:

```
After the node becomes operational, you must perform a takeover and
giveback of the HA partner node to ensure disk reassignment is
successful.
Do you want to continue (y/n)? y
```

b. Enter `y` to continue.

The system displays the following message:

```
Disk ownership will be updated on all disks previously belonging to
Filer with sysid <sysid>.
Do you want to continue (y/n)? y
```

c. Enter `y` to allow disk ownership to be updated.

29. If you are upgrading from a system with external disks to a system that supports internal and external disks (A800 systems, for example), set node4 as root to confirm that it boots from the root aggregate of node2.

Warning: You must perform the following substeps in the exact order shown; failure to do so might cause an outage or even data loss.

The following procedure sets node4 to boot from the root aggregate of node2:

a. Check the RAID, plex, and checksum information for the node2 aggregate:

```
aggr status -r
```

b. Check the overall status of the node2 aggregate:

```
aggr status
```

c. If necessary, bring the node2 aggregate online:

```
aggr_online root_aggr_from_<node2>
```

d. Prevent the node4 from booting from its original root aggregate:

```
aggr offline <root_aggr_on_node4>
```

e. Set the node2 root aggregate as the new root aggregate for node4:

```
aggr options aggr_from_<node2> root
```

30. Verify that the controller and chassis are configured as `ha` by entering the following command and observing the output:

```
ha-config show
```

The following example shows the output of the `ha-config show` command:

```
*> ha-config show
   Chassis HA configuration: ha
   Controller HA configuration: ha
```

Systems record in a PROM whether they are in an HA pair or a stand-alone configuration. The state must be the same on all components within the stand-alone system or HA pair.

If the controller and chassis are not configured as `ha`, use the following commands to correct the configuration:

```
ha-config modify controller ha
```

```
ha-config modify chassis ha.
```

If you have a MetroCluster configuration, use the following commands to correct the configuration:

```
ha-config modify controller mcc
```

```
ha-config modify chassis mcc.
```

31. Destroy the mailboxes on node4:

```
mailbox destroy local
```

32. Exit Maintenance mode:

```
halt
```

The system stops at the boot environment prompt.

33. On node3, check the system date, time, and time zone:

```
date
```

34. On node4, check the date at the boot environment prompt:

```
show date
```

35. If necessary, set the date on node4:

```
set date <mm/dd/yyyy>
```

36. On node4, check the time at the boot environment prompt:

```
show time
```

37. If necessary, set the time on node4:

```
set time <hh:mm:ss>
```

38. Verify the partner system ID is set correctly as noted in Step 26 under option.

```
printenv partner-sysid
```

39. If necessary, set the partner system ID on node4:

```
setenv partner-sysid <node3_sysid>
```

    a. Save the settings:

```
saveenv
```

40. Enter the boot menu at the boot environment prompt:

```
boot_ontap menu
```

41. At the boot menu, select option **(6) Update flash from backup config** by entering `6` at the prompt.

    The system displays the following message:

```
This will replace all flash-based configuration with the last backup to
disks. Are you sure you want to continue?:
```

42. Enter `y` at the prompt.

    The boot proceeds normally, and the system prompts you to confirm the system ID mismatch.

    The system might reboot twice before displaying the mismatch warning.

43. Confirm the mismatch.
    The node might complete one round of rebooting before booting normally.
44. Log in to node4.

Set the FC or UTA/UTA2 configuration on node4

If node4 has onboard FC ports, onboard unified target adapter (UTA/UTA2) ports, or a UTA/UTA2 card, you must configure the settings before completing the rest of the procedure.

About this task

You might need to complete Configure FC ports on node4, the Check and configure UTA/UTA2 ports on node4, or both sections.

If node4 does not have onboard FC ports, onboard UTA/UTA2 ports, or a UTA/UTA2 card, and you are upgrading a system with storage disks, you can skip to Map ports from node2 to node4.

However, if you have a V-Series system or have FlexArray Virtualization Software and are connected to storage arrays, and node4 does not have onboard FC ports, onboard UTA/ UTA2 ports, or a UTA/UTA2 card,

you must return to the *Install and boot node4* section and resume at Step 9. Make sure that node4 has sufficient rack space. If node4 is in a separate chassis from node2, you can put node4 in the same location as node3. If node2 and node4 are in the same chassis, then node4 is already in its appropriate rack location.

Choices

- Configure FC ports on node4
- Check and configure UTA/UTA2 ports on node4

Configure FC ports on node4

If node4 has FC ports, either onboard or on an FC adapter, you must set port configurations on the node before you bring it into service because the ports are not preconfigured. If the ports are not configured, you might experience a disruption in service.

Before you begin

You must have the values of the FC port settings from node2 that you saved in the section Prepare the nodes for upgrade.

About this task

You can skip this section if your system does not have FC configurations. If your system has onboard UTA/UTA2 ports or a UTA/UTA2 adapter, you configure them in Check and configure UTA/UTA2 ports on node4.

Important: If your system has storage disks, you must enter the commands in this section at the cluster prompt. If you have a V-Series system or a system with FlexArray Virtualization Software connected to storage arrays, you enter commands in this section in Maintenance mode.

Steps

1. Take one of the following actions:

If the system that you are upgrading…	Then…
Has storage disks	Go to Step 5.
Is a V-Series system or has FlexArray Virtualization Software and is connected to storage arrays	Go to Step 2.

2. Access Maintenance mode:

```
boot_ontap maint
```

3. Take one of the following actions:

If the system that you are upgrading…	Then…
Has storage disks	`system node hardware unified-connect show`
Is a V-Series system or has FlexArray Virtualization Software and is connected to storage arrays	`ucadmin show`

The system displays information about all FC and converged network adapters on the system.

4. Compare the FC settings on the new nodes with the settings that you captured earlier from the original node.
5. Take one of the following actions:

If the system that you are upgrading…	Then…

Has storage disks	Modify the FC ports on node4 as needed:
	• To program target ports:
	`system node hardware unified-connect modify -type | -t target -adapter <port_name>`
	• To program initiator ports:
	`system node unified-connect modify type | -t initiator -adapter <port_name>`
	`-type` is the FC4 type, target or initiator.

Is a V-Series system or has FlexArray Virtualization Software and is connected to storage arrays	Modify the FC ports on node4 as needed: `ucadmin modify -m fc -t initiator -f <adapter_port_name>` `-t` is the FC4 type, target or initiator. **Note**: The FC ports need to be programmed as initiators.

6. Take one of the following actions:

If the system that you are upgrading…	Then…
Has storage disks	Verify the new settings by entering the following command and examining the output: `system node unified-connect show`
Is a V-Series system or has FlexArray Virtualization Software and is connected to storage arrays	Verify the new settings by entering the following command and examining the output: `ucadmin show`

7. Take one of the following actions:

If the default FC settings on the new nodes are…	Then…
The same as the ones you that captured on the original nodes	Go to Step 11.

If the default FC settings on the new nodes are…	Then…
Different from the ones that you captured on the original nodes	Go to Step8.

8. Exit Maintenance mode:

```
halt
```

9. After you enter the command, wait until the system stops at the boot environment prompt.
10. Take one of the following actions:

If the system that you are upgrading…	Then…
Is a V-Series system or has FlexArray Virtualization software running Data ONTAP 8.3.0 or later	Access Maintenance mode by entering the following command at the boot environment prompt: `boot_ontap maint`
Is not a V-Series system and does not have FlexArray Virtualization software	Boot node4 by entering the following command at the boot environment prompt: `boot_ontap`

11. Take one of the following actions:

If the system that you are upgrading…	Then…
Has storage disks	• Go to Check and configure UTA/UTA2 ports on node4 if node4 has a UTA/UTA2A card or UTA/UTA2 onboard ports. • Skip the section and go to Map ports from node2 to node4 if node4 does not have a UTA/UTA2 card or UTA/UTA2 onboard ports.
Is a V-Series system or has FlexArray Virtualization Software and is connected to storage arrays	• Go to Check and configure UTA/UTA2 ports on node4 if node4 has a UTA/ UTA2 card or UTA/UTA2 onboard ports. • Skip the section *Check and configure UTA/UTA2 ports on node4* if node4 does not have a UTA/UTA2 card or UTA/UTA2 onboard ports, return to the section *Install and boot node4*, and resume the section at Step 9.

Check and configure UTA/UTA2 ports on node4

If node4 has onboard UTA/UTA2 ports or a UTA/UTA2A card, you must check the configuration of the ports and configure them, depending on how you want to use the upgraded system.

Before you begin

You must have the correct SFP+ modules for the UTA/UTA2 ports.

About this task

UTA/UTA2 ports can be configured into native FC mode or UTA/UTA2A mode. FC mode supports FC initiator and FC target; UTA/UTA2 mode enables concurrent NIC and FCoE traffic to share the same 10GbE SFP+ interface and supports FC target.

NetApp marketing materials might use the term UTA2 to refer to CNA adapters and ports. However, the CLI uses the term CNA.

UTA/UTA2 ports might be on an adapter or on the controller with the following configurations:

- UTA/UTA2 cards ordered at the same time as the controller are configured before shipment to have the personality you requested.
- UTA/UTA2 cards ordered separately from the controller are shipped with the default FC target personality.
- Onboard UTA/UTA2 ports on new controllers are configured (before shipment) to have the personality you requested.

However, you can check the configuration of the UTA/UTA2 ports on node4 and change it, if necessary.

Attention: If your system has storage disks, you enter the commands in this section at the cluster prompt unless directed to enter Maintenance mode. If you have a MetroCluster FC system, V-Series system or a system with FlexArray Virtualization software that is connected to storage arrays, you must be in Maintenance mode to configure UTA/UTA2 ports.

Steps

1. Check how the ports are currently configured by using one of the following commands on node4:

If the system…	Then…
Has storage disks	`system node hardware unified-connect show`
Is a V-Series system or has FlexArray Virtualization Software and is connected to storage arrays	`ucadmin show`

The system displays output similar to the following example:

```
*> ucadmin show
                Current  Current    Pending   Pending   Admin
Node   Adapter  Mode     Type       Mode      Type      Status
----   -------  ---      ---------  -------   --------  -------
f-a    0e       fc       initiator  -          -        online
f-a    0f       fc       initiator  -          -        online
f-a    0g       cna      target     -          -        online
f-a    0h       cna      target     -          -        online
f-a    0e       fc       initiator  -          -        online
f-a    0f       fc       initiator  -          -        online
f-a    0g       cna      target     -          -        online
f-a    0h       cna      target     -          -        online
*>
```

2. If the current SFP+ module does not match the desired use, replace it with the correct SFP+ module.

   Contact your NetApp representative to obtain the correct SFP+ module.

3. Examine the output of the `system node hardware unified-connect show` or `ucadmin show` command and determine whether the UTA/UTA2 ports have the personality you want.
4. Take one of the following actions:

If the CNA ports…	Then…
Do not have the personality that you want	Go to Step 5.
Have the personality that you want	Skip Step 5 through Step 12 and go to Step 13.

5. Take one of the following actions:

If the system…	Then…
Has storage disks and is running Data ONTAP 8.3	Boot node4 and enter maintenance mode: `boot_ontap maint`
Is a V-Series system or has FlexArray Virtualization Software and is connected to storage arrays	Go to Step 6. You should already be in Maintenance mode.

6. Take one of the following actions:

If you are configuring…	Then…
Ports on a UTA/UTA2A card	Go to Step 7.
Onboard UTA/UTA2 ports	Skip Step 7 and go to Step 8.

7. If the adapter is in initiator mode, and if the UTA/UTA2 port is online, take the UTA/UTA2 port offline:

   `storage disable adapter <adapter_name>`

   Adapters in target mode are automatically offline in Maintenance mode.

8. If the current configuration does not match the desired use, enter the following command to change the configuration as needed:

   `ucadmin modify -m fc|cna -t initiator|target <adapter_name>`

   - `-m` is the personality mode: FC or 10GbE UTA.
   - `-t` is the FC4 type: target or initiator.

   > You must use FC initiator for tape drives and FlexArray Virtualization systems. You must use the FC target for SAN clients.

9. Verify the settings by entering the following command and examining its output:

```
ucadmin show
```

10. Perform one of the following actions:

If the system…	Then…

Has storage disks	a. Enter the following command:
	`halt`
	The system stops at the boot environment prompt.
	b. Enter the following command:
	`boot_ontap`

Is a V-Series system or has FlexArray Virtualization Software and is connected to storage arrays and is running Data ONTAP 8.3	Reboot to Maintenance mode: `boot_ontap maint`

11. Verify the settings:

If the system…	Then…
Has storage disks	Enter the following command: `system node hardware unified-connect show`
Is a V-Series system or has FlexArray Virtualization Software and is connected to storage arrays	Enter the following command: `ucadmin show`

The output in the following examples shows that the FC4 type of adapter "1b" is changing to `initiator` and that the mode of adapters "2a" and "2b" is changing to `cna`.

```
cluster1::> system node hardware unified-connect show
                Current  Current    Pending  Pending    Admin
Node  Adapter  Mode     Type       Mode     Type       Status
----  -------  -------  ---------  -------  -------    -----
f-a    1a      fc       initiator  -        -          online
f-a    1b      fc       target     -        initiator  online
f-a    2a      fc       target     cna      -          online
f-a    2b      fc       target     cna      -          online
4 entries were displayed.
```

```
*> ucadmin show
                Current Current    Pending  Pending    Admin
Node   Adapter  Mode    Type       Mode     Type       Status
----   -------  ------- ---------  -------  -------    -----
f-a     1a      fc      initiator  -        -          online
f-a     1b      fc      target     -        initiator  online
f-a     2a      fc      target     cna      -          online
f-a     2b      fc      target     cna      -          online
4 entries were displayed.
*>
```

12. Place any target ports online by entering one of the following commands, once for each port:

If the system…	Then…
Has storage disks	`network fcp adapter modify -node <node_name> -adapter <adapter_name> -state up`
Is a V-Series system or has FlexArray Virtualization Software and is connected to storage arrays	`fcp config <adapter_name> up`

13. Cable the port.
14. Perform one of the following actions:

If the system…	Then…
Has storage disks	Go to Map ports from node2 to node4.
Is a V-Series system or has FlexArray Virtualization Software and is connected to storage arrays	Return to the section *Install and boot node4*, and resume the section at Step 9.

Map ports from node2 to node4

You must make sure that the physical ports on node2 map correctly to the physical ports on node4, which will let node4 communicate with other nodes in the cluster and with the network after the upgrade.

Before you begin

You must already have information about the ports on the new nodes, to access this information refer to References to link to the *Hardware Universe*. You use the information later in this section.

The software configuration of node4 must match the physical connectivity of node4, and IP connectivity must be restored before you continue with the upgrade.

About this task

Port settings might vary, depending on the model of the nodes.

Steps

1. Perform the following steps to verify if the setup is a two-node switchless cluster:
   a. Set the privilege level to advanced:

      ```
      set -privilege advanced
      ```

   b. Verify if the setup is a two-node switchless cluster:

      ```
      network options switchless-cluster show
      ```

      For example:

      ```
      cluster::*> network options switchless-cluster show
      Enable Switchless Cluster:  false/true
      ```

      The value of this command must match the physical state of the system.

   c. Return to the administration privilege level using the following command:

      ```
      set -privilege admin
      ```

2. Make the following changes:
   a. Modify ports that will be part of `Cluster` broadcast domain:

      ```
      network port modify -node <node_name> -port <port_name> -mtu 9000 -ipspace
      Cluster
      ```

      This example adds Cluster port "e1b" on "node2":

      ```
      network port modify -node node2 -port e1b -ipspace Cluster -mtu 9000
      ```

   b. Migrate the cluster LIFs to the new ports, once for each LIF:

      ```
      network interface migrate -vserver <vserver_name> -lif <lif_name> source-
      node node2 -destination-node node2 -destination-port <port_name>
      ```

      When all cluster LIFs are migrated and cluster communication is established, the cluster should come into quorum.

   c. Modify the home port of the Cluster LIFs:

      ```
      network interface modify -vserver Cluster -lif <lif_name> -home-port
      <port_name>
      ```

   d. Remove the old ports from the `Cluster` broadcast domain:

      ```
      network port broadcast-domain remove-ports -ipspace Cluster -broadcast
      -domain Cluster -ports <node2:port>
      ```

   e. Display the `health` state of node2/node4:

      ```
      cluster show -node node2 -fields health
      ```

f. Each cluster LIF must be listening on port 7700. Verify that the cluster LIFs are listening on port 7700:

```
::> network connections listening show -vserver Cluster
```

Port 7700 listening on cluster ports is the expected outcome as shown in the following example for a two-node cluster:

```
Cluster::> network connections listening show -vserver Cluster
Vserver Name     Interface Name:Local Port     Protocol/Service
---------------- ----------------------------  -------------------
Node: NodeA
Cluster          NodeA_clus1:7700               TCP/ctlopcp
Cluster          NodeA_clus2:7700               TCP/ctlopcp
Node: NodeB
Cluster          NodeB_clus1:7700               TCP/ctlopcp
Cluster          NodeB_clus2:7700               TCP/ctlopcp
4 entries were displayed.
```

g. If necessary, for each cluster LIF that is not listening on port 7700, set the administrative status of the LIF to `down` and then `up`:

```
::> net int modify -vserver Cluster -lif <cluster-lif> -status-admin down;
net int modify -vserver Cluster -lif <cluster-lif> -status-admin up
```

Repeat substep (f) to verify that the cluster LIF is now listening on port 7700.

3. Modify the broadcast domain memberships of physical ports hosting data LIFs.

a. List the reachability status of all ports:

```
network port reachability show
```

b. Repair the reachability of the physical ports, followed by VLAN ports, by running the following command on each port, one port at a time:

```
reachability repair -node <node_name> -port <port_name>
```

A warning like the following is expected. Review and enter y or n, as appropriate:

```
Warning: Repairing port "node_name:port" may cause it to move into a
different broadcast domain, which can cause LIFs to be re-homed away
from the port. Are you sure you want to continue? {y|n}:
```

c. To enable ONTAP to complete the repair, wait for about a minute after running the `reachability repair` command on the last port.

d. List all broadcast domains on the cluster:

```
broadcast-domain show
```

e. As the reachability repair is performed, ONTAP attempts to place the ports in the correct broadcast domains. However, if a port's reachability cannot be determined and does not correspond to any of the existing broadcast domains, ONTAP will create new broadcast domains for these ports. As required, you can delete the newly created broadcast domains if all their member ports will become member ports of the interface groups. Delete broadcast domains:

```
broadcast-domain delete -broadcast-domain <broadcast_domain>
```

f. Review the interface group configuration, and as required, add or delete member ports.

Add member ports to interface group ports:

```
ifgrp add-port -node node_name -ifgrp <ifgrp_port> -port <port_name>
```

Remove member ports from interface group ports:

```
ifgrp remove-port -node node_name -ifgrp <ifgrp_port> -port <port_name>
```

g. Delete and re-create VLAN ports as needed. Delete VLAN ports:

```
vlan delete -node <node_name> -vlan-name <vlan_port>
```

Create VLAN ports:

```
vlan create -node <node_name> -vlan-name <vlan_port>
```

Depending on the complexity of the networking configuration of the system being upgraded, you might be required to repeat Substeps (a) to (g) until all ports are placed correctly where needed.

4. If there are no VLANs configured on the system, go to Step 5. If there are VLANs configured, restore displaced VLANs that were previously configured on ports that no longer exist or were configured on ports that were moved to another broadcast domain.

a. Display the displaced VLANs:

```
displaced-vlans show
```

b. Restore the displaced VLANs to the desired destination port:

```
displaced-vlans restore -node <node_name> -port <port_name> -destination
-port <destination_port>
```

c. Verify that all displaced VLANs have been restored:

```
displaced-vlans show
```

d. VLANs are automatically placed into the appropriate broadcast domains about a minute after they are created. Verify that the restored VLANs have been placed into the appropriate broadcast domains:

```
network port reachability show
```

5. Starting with ONTAP 9.8, ONTAP will automatically modify the home ports of LIFs if the ports are moved between broadcast domains during the network port reachability repair procedure. If a LIF's home port was

moved to another node, or is unassigned, that LIF will be presented as a displaced LIF. Restore the home ports of displaced LIFs whose home ports either no longer exist or were relocated to another node.

a. Display the LIFs whose home ports might have moved to another node or no longer exist:

```
displaced-interface show
```

b. Restore the home port of each LIF:

```
displaced-interface restore -vserver <vserver_name> -lif-name <lif_name>
```

c. Verify that all LIF home ports have been restored:

```
displaced-interface show
```

When all ports are correctly configured and added to the correct broadcast domains, the `network port reachability show` command should report the reachability status as `ok` for all connected ports, and the status as `no-reachability` for ports with no physical connectivity. If any ports are reporting a status other than these two, repair the reachability as outlined in Step 3.

6. Verify that all LIFs are administratively up on ports belonging to the correct broadcast domains.

a. Check for any LIFs that are administratively down:

```
network interface show -vserver <vserver_name> -status-admin down
```

b. Check for any LIFs that are operationally down:

```
network interface show -vserver <vserver_name> -status-oper down
```

c. Modify any LIFs that need to be modified to have a different home port:

```
network interface modify -vserver <vserver_name> -lif <lif_name> -home-port
<home_port>
```

> For iSCSI LIFs, modification of the home port requires the LIF to be administratively down.

d. Revert LIFs that are not home to their respective home ports:

```
network interface revert *
```

Move NAS data LIFs owned by node2 from node3 to node4 and verify SAN LIFs on node4

After mapping ports from node2 to node4 and before you relocate node2 aggregates from node3 to node4, you must move the NAS data LIFs owned by node2 currently on node3 from node3 to node4. You also must verify the SAN LIFs on node4.

About this task

Remote LIFs handle traffic to SAN LUNs during the upgrade procedure. Moving SAN LIFs is not necessary for cluster or service health during the upgrade. SAN LIFs are not moved unless they need to be mapped to new ports. You verify that the LIFs are healthy and located on appropriate ports after you bring node4 online.

Steps

1. List all the NAS data LIFs that are not owned by node3 by entering the following command on either node and capturing the output:

   ```
   network interface show -role data -curr-node node3 -is-home false
   ```

2. If the cluster is configured for SAN LIFs, record the SAN LIFs and existing configuration information in this worksheet for use later in the procedure.

   a. List the SAN LIFs on node3 and examine the output:

      ```
      network interface show -data-protocol fc*
      ```

      The system returns output similar to the following example:

      ```
      cluster1::> net int show -data-protocol fc*
        (network interface show)
                  Logical     Status     Network            Current
      Current Is
      Vserver     Interface   Admin/Oper Address/Mask       Node
      Port    Home
      ----------  ----------  ---------- ------------------ -------------
      ------- ----
      svm2_cluster1
                  lif_svm2_cluster1_340
                              up/up      20:02:00:50:56:b0:39:99
                                                            cluster1-01
      1b      true
                  lif_svm2_cluster1_398
                              up/up      20:03:00:50:56:b0:39:99
                                                            cluster1-02
      1a      true
                  lif_svm2_cluster1_691
                              up/up      20:01:00:50:56:b0:39:99
                                                            cluster1-01
      1a      true
                  lif_svm2_cluster1_925
                              up/up      20:04:00:50:56:b0:39:99
                                                            cluster1-02
      1b      true
      4 entries were displayed.
      ```

   b. List the existing configurations and examine the output:

      ```
      fcp adapter show -fields switch-port,fc-wwpn
      ```

      The system returns output similar to the following example:

```
cluster1::> fcp adapter show -fields switch-port,fc-wwpn
  (network fcp adapter show)
node          adapter  fc-wwpn                  switch-port
------------  -------  -----------------------  -------------
cluster1-01   0a       50:0a:09:82:9c:13:38:00  ACME Switch:0
cluster1-01   0b       50:0a:09:82:9c:13:38:01  ACME Switch:1
cluster1-01   0c       50:0a:09:82:9c:13:38:02  ACME Switch:2
cluster1-01   0d       50:0a:09:82:9c:13:38:03  ACME Switch:3
cluster1-01   0e       50:0a:09:82:9c:13:38:04  ACME Switch:4
cluster1-01   0f       50:0a:09:82:9c:13:38:05  ACME Switch:5
cluster1-01   1a       50:0a:09:82:9c:13:38:06  ACME Switch:6
cluster1-01   1b       50:0a:09:82:9c:13:38:07  ACME Switch:7
cluster1-02   0a       50:0a:09:82:9c:6c:36:00  ACME Switch:0
cluster1-02   0b       50:0a:09:82:9c:6c:36:01  ACME Switch:1
cluster1-02   0c       50:0a:09:82:9c:6c:36:02  ACME Switch:2
cluster1-02   0d       50:0a:09:82:9c:6c:36:03  ACME Switch:3
cluster1-02   0e       50:0a:09:82:9c:6c:36:04  ACME Switch:4
cluster1-02   0f       50:0a:09:82:9c:6c:36:05  ACME Switch:5
cluster1-02   1a       50:0a:09:82:9c:6c:36:06  ACME Switch:6
cluster1-02   1b       50:0a:09:82:9c:6c:36:07  ACME Switch:7
16 entries were displayed
```

3. Take one of the following actions:

If node2…	Description
Had interface groups or VLANs configured	Go to Step 4.
Did not have interface groups or VLANs configured	Skip Step 4 and go to Step 5.

4. Take the following steps to migrate any NAS data LIFs hosted on interface groups and VLANs that originally were on node2 from node3 to node4.

   a. Migrate any LIFs hosted on node3 that previously belonging to node2 on an interface group to a port on node4 that is capable of hosting LIFs on the same network by entering the following command, once for each LIF:

   ```
   network interface migrate -vserver <vserver_name> -lif <lif_name>
   -destination-node node4 -destination-port <netport|ifgrp>
   ```

   b. Modify the home port and home node of the LIFs in Substep a to the port and node currently hosting the LIFs by entering the following command, once for each LIF:

   ```
   network interface modify -vserver <vserver_name> -lif <datalif_name> -home
   -node node4 home-port <netport|ifgrp>
   ```

   c. Migrate any LIFs hosted on node3 that previously belonged to node2 on a VLAN port to a port on node4 that is capable of hosting LIFs on the same network by entering the following command, once

for each LIF:

```
network interface migrate -vserver <vserver_name> -lif <datalif_name>
-destination-node node4 -destination-port <netport|ifgrp>
```

d. Modify the home port and home node of the LIFs in Substep c to the port and node currently hosting the LIFs by entering the following command, once for each LIF:

```
network interface modify -vserver <vserver_name> -lif <datalif_name> -home
-node <node4> home-port <netport|ifgrp>
```

5. Take one of the following actions:

If the cluster is configured for…	Then…
NAS	Complete Step 6 through Step 9, skip Step 10, and complete Step 11 through Step 14.
SAN	Skip Step 6 through Step 9, and complete Step 10 through Step 14.
Both NAS and SAN	Complete Step 6 through Step 14.

6. If you have data ports that are not the same on your platforms, enter the following command to add the ports to the broadcast domain:

```
network port broadcast-domain add-ports -ipspace <IPspace_name> -broadcast
-domain mgmt ports <node:port>
```

The following example adds port "e0a" on node "6280-1" and port "e0i" on node "8060-1" to broadcast domain mgmt in the IPspace Default:

```
cluster::> network port broadcast-domain add-ports -ipspace Default
-broadcast-domain mgmt -ports 6280-1:e0a, 8060-1:e0i
```

7. Migrate each NAS data LIF to node4 by entering the following command, once for each LIF:

```
network interface migrate -vserver <vserver-name> -lif <datalif-name>
-destination-node <node4> -destination-port <netport|ifgrp> -home-node <node4>
```

8. Make sure that the data migration is persistent:

```
network interface modify -vserver <vserver_name> -lif <datalif_name> -home
-port <netport|ifgrp>
```

9. Verify the status of all links as `up` by entering the following command to list all the network ports and examining its output:

```
network port show
```

The following example shows the output of the `network port show` command with some LIFs up and others down:

```
cluster::> network port show
                                                                  Speed
(Mbps)
Node   Port      IPspace      Broadcast Domain Link   MTU    Admin/Oper
------ --------- ------------ ---------------- ----- ------- -----------
node3
       a0a       Default      -                up       1500  auto/1000
       e0M       Default      172.17.178.19/24 up       1500  auto/100
       e0a       Default      -                up       1500  auto/1000
       e0a-1     Default      172.17.178.19/24 up       1500  auto/1000
       e0b       Default      -                up       1500  auto/1000
       e1a       Cluster      Cluster          up       9000  auto/10000
       e1b       Cluster      Cluster          up       9000  auto/10000
node4
       e0M       Default      172.17.178.19/24 up       1500  auto/100
       e0a       Default      172.17.178.19/24 up       1500  auto/1000
       e0b       Default      -                up       1500  auto/1000
       e1a       Cluster      Cluster          up       9000  auto/10000
       e1b       Cluster      Cluster          up       9000  auto/10000
12 entries were displayed.
```

10. If the output of the `network port show` command displays network ports that are not available in the new node and are present in the old nodes, delete the old network ports by completing the following substeps:

    a. Enter the advanced privilege level by entering the following command:

       `set -privilege advanced`

    b. Enter the following command, once for each old network port:

       `network port delete -node <node_name> -port <port_name>`

    c. Return to the admin level by entering the following command:

       `set -privilege admin`

11. Confirm that the SAN LIFs are on the correct ports on node4 by completing the following substeps:

    a. Enter the following command and examine its output:

       `network interface show -data-protocol iscsi|fcp -home-node node4`

       The system returns output similar to the following example:

```
cluster::> network interface show -data-protocol iscsi|fcp -home-node
node4
            Logical    Status     Network            Current
Current Is
Vserver     Interface  Admin/Oper Address/Mask       Node
Port    Home
----------- ---------- ---------- ------------------ -------------
------- ----
vs0
            a0a          up/down  10.63.0.53/24      node4
a0a     true
            data1        up/up    10.63.0.50/18      node4
e0c     true
            rads1        up/up    10.63.0.51/18      node4
e1a     true
            rads2        up/down  10.63.0.52/24      node4
e1b     true
vs1
            lif1         up/up    172.17.176.120/24  node4
e0c     true
            lif2         up/up    172.17.176.121/24  node4
```

b. Verify that the new `adapter` and `switch-port` configurations are correct by comparing the output from the `fcp adapter show` command with the new configuration information that you recorded in the worksheet in Step 2.

   List the new SAN LIF configurations on node4:

   `fcp adapter show -fields switch-port,fc-wwpn`

   The system returns output similar to the following example:

```
cluster1::> fcp adapter show -fields switch-port,fc-wwpn
  (network fcp adapter show)
node         adapter  fc-wwpn                  switch-port
-----------  -------  -----------------------  -------------
cluster1-01  0a       50:0a:09:82:9c:13:38:00  ACME Switch:0
cluster1-01  0b       50:0a:09:82:9c:13:38:01  ACME Switch:1
cluster1-01  0c       50:0a:09:82:9c:13:38:02  ACME Switch:2
cluster1-01  0d       50:0a:09:82:9c:13:38:03  ACME Switch:3
cluster1-01  0e       50:0a:09:82:9c:13:38:04  ACME Switch:4
cluster1-01  0f       50:0a:09:82:9c:13:38:05  ACME Switch:5
cluster1-01  1a       50:0a:09:82:9c:13:38:06  ACME Switch:6
cluster1-01  1b       50:0a:09:82:9c:13:38:07  ACME Switch:7
cluster1-02  0a       50:0a:09:82:9c:6c:36:00  ACME Switch:0
cluster1-02  0b       50:0a:09:82:9c:6c:36:01  ACME Switch:1
cluster1-02  0c       50:0a:09:82:9c:6c:36:02  ACME Switch:2
cluster1-02  0d       50:0a:09:82:9c:6c:36:03  ACME Switch:3
cluster1-02  0e       50:0a:09:82:9c:6c:36:04  ACME Switch:4
cluster1-02  0f       50:0a:09:82:9c:6c:36:05  ACME Switch:5
cluster1-02  1a       50:0a:09:82:9c:6c:36:06  ACME Switch:6
cluster1-02  1b       50:0a:09:82:9c:6c:36:07  ACME Switch:7
16 entries were displayed
```

If a SAN LIF in the new configuration is not on an adapter that is still attached to the same `switch-port`, it might cause a system outage when you reboot the node.

c. If node4 has any SAN LIFs or groups of SAN LIFs that are on a port that did not exist on node2, move them to an appropriate port on node4 by entering one of the following commands:

   i. Set the LIF status to down:

   ```
   network interface modify -vserver <vserver_name> -lif <lif_name> -status
   -admin down
   ```

   ii. Remove the LIF from the port set:

   ```
   portset remove -vserver <vserver_name> -portset <portset_name> -port-name
   <port_name>
   ```

   iii. Enter one of the following commands:

   - Move a single LIF:

     ```
     network interface modify -lif <lif_name> -home-port <new_home_port>
     ```

   - Move all the LIFs on a single nonexistent or incorrect port to a new port:

     ```
     network interface modify {-home-port <port_on_node2> -home-node
     <node2> -role data} -home-port <new_home_port_on_node4>
     ```

- Add the LIFs back to the port set:

```
portset add -vserver <vserver_name> -portset <portset_name> -port-name
<port_name>
```

> You must move SAN LIFs to a port that has the same link speed as the original port.

12. Modify the status of all LIFs to `up` so the LIFs can accept and send traffic on the node by entering the following command:

```
network interface modify -vserver <vserver_name> -home-port <port_name> -home
-node <node4> lif <lif_name> -status-admin up
```

13. Verify that any SAN LIFs have been moved to the correct ports and that the LIFs have the status of `up` by entering the following command on either node and examining the output:

```
network interface show -home-node <node4> -role data
```

14. If any LIFs are down, set the administrative status of the LIFs to `up` by entering the following command, once for each LIF:

```
network interface modify -vserver <vserver_name> -lif <lif_name> -status-admin
up
```

Worksheet: Information to record before moving NAS data LIFs to node4

To help verify that you have the correct configuration after moving SAN LIFs from node3 to node4, you can use the following worksheet to record the `adapter` and `switch-port` information for each LIF.

Record the LIF `adapter` information from the `network interface show -data-protocol fc*` command output and the `switch-port` information from the `fcp adapter show -fields switch-port,fc-wwpn` command output for node3.

After you complete the migration to node4, record the LIF `adapter` and `switch-port` information for the LIFs on node4 and verify that each LIF is still connected to the same `switch-port`.

Node3			Node4		
LIF	`adapter`	`switch-port`	**LIF**	`adapter`	`switch-port`

Relocate node2's non-root aggregates from node3 to node4

Having relocated node2's non-root aggregates to node3, you now must relocate them from node3 to node4.

Steps

1. Enter the following command on either controller, and examine the output to identify which non-root aggregates to relocate:

   ```
   storage aggregate show -owner-name <node3> -home-id <node2_system_id>
   ```

2. Relocate the aggregates by completing the following substeps:

   a. Access the advanced privilege level by entering the following command on either node:

      ```
      set -privilege advanced
      ```

   b. Enter the following command:

      ```
      storage aggregate relocation start -node <node3> -destination <node4>
      -aggregate-list <aggr_name1, aggr_name2…> -ndo-controller-upgrade true
      ```

      The aggregate list is the list of aggregates owned by node4 that you obtained in Step 1.

   c. When prompted, enter `y`.

      Relocation occurs in the background. It could take anywhere from a few seconds to a couple of minutes to relocate an aggregate. The time includes both client outage and non-outage portions. The command does not relocate any offline or restricted aggregates.

   d. Return to the admin level:

      ```
      set -privilege admin
      ```

3. Check the relocation status:

   ```
   storage aggregate relocation show -node <node3>
   ```

   The output will display `Done` for an aggregate after it has been relocated.

   Wait until all the node2 aggregates have been relocated to node4 before proceeding to the next step.

4. Take one of the following actions:

If relocation of…	Then…
All aggregates was successful	Go to Step 5.

If relocation of…	Then…

Any aggregates failed, or were vetoed	a. Check the EMS logs for the corrective action.
	b. Perform the corrective action.
	c. Access the advanced privilege level by entering the following command on either node:
	`set -privilege advanced`
	d. Relocate any failed or vetoed aggregates:
	`storage aggregate relocation start -node <node3> destination <node4> -aggregate-list <aggr_name1, aggr_name2…> ndo-controller-upgrade true`
	The aggregate list is the list of failed or vetoed aggregates.
	e. When prompted, enter `y`.
	f. Return to the admin level by entering the following command:
	`set -privilege admin`
	If necessary, you can force the relocation using one of the following methods:
	• Overriding veto checks:
	`storage aggregate relocation start -override -vetoes -ndo-controller-upgrade`
	• Overriding destination checks:
	`storage aggregate relocation start -override -destination-checks -ndocontroller-upgrade`
	For more information about storage aggregate relocation commands refer to References to link to *Disk and aggregate management with the CLI* and the *ONTAP 9 Commands: Manual Page Reference*.

5. Verify that all node2 non-root aggregates are online and their state on node4:

   `storage aggregate show -node <node4> -state offline -root false`

   The node2 aggregates were listed in the output of the command in Step 1.

6. If any aggregate has gone offline or become foreign, bring it online by using the following command for each aggregate:

   `storage aggregate online -aggregate <aggr_name>`

7. Verify that all the volumes in node2 aggregates are online on node4:

   ```
   volume show -node <node4> -state offline
   ```

8. If any volumes are offline on node4, bring them online:

   ```
   volume online -vserver <vserver-name> -volume <volume_name>
   ```

9. Send a post-upgrade AutoSupport message to NetApp for node4:

   ```
   system node autosupport invoke -node <node4> -type all -message "<node2>
   successfully upgraded from <platform_old> to <platform_new>"
   ```

Stage 6. Complete the upgrade

Stage 6. Complete the upgrade

During Stage 6, you confirm that the new nodes are set up correctly. If one of the new nodes has a unified target adapter, you must restore any port configurations and might need to change the personality of the adapter. You also must set up Storage Encryption if the new nodes are encryption-enabled. You also must decommission the old nodes.

1. Ensure that the new controllers are set up correctly
2. Set up Storage Encryption on the new controller module
3. Set up NetApp Encryption on the new controller module
4. Decommission the old system
5. Resume SnapMirror operations

Confirm that the new controllers are set up correctly

To confirm correct setup, you must enable the HA pair. You must also verify that node3 and node4 can access each other's storage and that neither owns data LIFs belonging to other nodes on the cluster. In addition, you must confirm that node3 owns node1's aggregates and that node4 owns node2's aggregates, and that the volumes for both nodes are online.

Steps

1. Enable storage failover by entering the following command on one of the nodes:

   ```
   storage failover modify -enabled true -node <node3>
   ```

2. Verify that storage failover is enabled:

   ```
   storage failover show
   ```

   The following example shows the output of the command when storage failover is enabled:

```
cluster::> storage failover show
                              Takeover
Node           Partner        Possible State Description
-------------- -------------- -------- ------------------
node3          node4          true     Connected to node4
node4          node3          true     Connected to node3
```

3. Take one of the following actions:

If the cluster is a…	Description
Two-node cluster	Enable cluster high availability by entering the following command on either node: `cluster ha modify -configured true`
Cluster with more than two nodes	Go to Step 4.

4. Verify that node3 and node4 belong to the same cluster by entering the following command and examining the output:

   ```
   cluster show
   ```

5. Verify that node3 and node4 can access each other's storage by entering the following command and examining the output:

   ```
   storage failover show -fields local-missing-disks,partner-missing-disks
   ```

6. Verify that neither node3 nor node4 owns data LIFs home-owned by other nodes in the cluster by entering the following command and examining the output:

   ```
   network interface show
   ```

   If either node3 or node4 owns data LIFs home-owned by other nodes in the cluster, use the `network interface revert` command to revert the data LIFs to their home-owner.

7. Verify that node3 owns the aggregates from node1 and that node4 owns the aggregates from node2:

   ```
   storage aggregate show -owner-name <node3>
   storage aggregate show -owner-name <node4>
   ```

8. Determine whether any volumes are offline:

   ```
   volume show -node <node3> -state offline
   volume show -node <node4> -state offline
   ```

9. If any volumes are offline, compare them with the list of offline volumes that you captured in Step 19 (d) in *Prepare the nodes for upgrade*, and bring online any of the offline volumes, as required, by entering the following command, once for each volume:

   ```
   volume online -vserver <vserver_name> -volume <volume_name>
   ```

10. Install new licenses for the new nodes by entering the following command for each node:

    `system license add -license-code <license_code,license_code,license_code…>`

    The license-code parameter accepts a list of 28 upper-case alphabetic character keys. You can add one license at a time, or you can add multiple licenses at once, each license key separated by a comma.

11. If NetApp Storage Encryption (NSE) was in use on the configuration and you set the `setenv bootarg.storageencryption.support` command to "true" with the `kmip.init.maxwait` variable "off" (in Step 16 of *Install and boot node3*), you need to reset the variable:
    `set diag; systemshell -node <node_name> -command sudo kenv -u -p kmip.init.maxwait`

12. To remove all of the old licenses from the original nodes, enter one of the following commands:

    ```
    system license clean-up -unused -expired
    system license delete -serial-number <node_serial_number> -package
    <licensable_package>
    ```

    - To delete all expired licenses, enter:

      `system license clean-up -expired`

    - To delete all unused licenses, enter:

      `system license clean-up -unused`

    - To delete a specific license from a cluster, enter the following commands on the nodes:

      ```
      system license delete -serial-number <node1_serial_number> -package *
      system license delete -serial-number <node2_serial_number> -package *
      ```

      The following output is displayed:

      ```
      Warning: The following licenses will be removed:
      <list of each installed package>
      Do you want to continue? {y|n}: y
      ```

      Enter `y` to remove all of the packages.

13. Verify that the licenses are correctly installed by entering the following command and examining its output:

    `system license show`

    You can compare the output with the output that you captured in Step 30 of *Prepare the nodes for upgrade*.

14. Configure the SPs by performing the following command on both nodes:

    `system service-processor network modify -node <node_name>`

    Go to References to link to the *System Administration Reference* for information about the SPs and the *ONTAP 9 Commands: Manual Page Reference* for detailed information about the `system service-`

`processor network modify` command.

15. Take the following actions on one of the new nodes:
    a. Enter advanced privilege level by entering the following command:

       ```
       set -privilege advanced
       ```

    b. Enter the following command:

       ```
       storage failover modify -node <node-name> -cifs-ndo-duration
       default|medium|low
       ```

       - Enter `medium` if the system will have workloads in which 50 percent to 75 percent of the operations will be 4 KB or smaller.
       - Enter `low` if the system will have workloads in which 75 percent to 100 percent of the operations will be 4 KB or smaller.

    c. Return to the admin level by entering the following command:

       ```
       set -privilege admin
       ```

    d. Reboot the system to confirm that the changes take effect.
16. If you want to set up a switchless cluster on the new nodes, go to References to link to the *Network Support Site* and follow the instructions in *Transitioning to a two-node switchless cluster*.

After you finish

If Storage Encryption is enabled on node3 and node4, complete the steps in Set up Storage Encryption on the new controller module. Otherwise, complete the steps in Decommission the old system.

Set up Storage Encryption on the new controller module

If the replaced controller or the HA partner of the new controller uses Storage Encryption, you must configure the new controller module for Storage Encryption, including installing SSL certificates and setting up key management servers.

About this task

This procedure includes steps that are performed on the new controller module. You must enter the command on the correct node.

Steps

1. Verify that the key management servers are still available, their status, and their authentication key information:

   ```
   security key-manager show -status

   security key-manager query
   ```

2. Add the key management servers listed in the previous step to the key management server list in the new controller.
    a. Add the key management server:

```
security key-manager -add <key_management_server_ip_address>
```

b. Repeat the previous step for each listed key management server.

You can link up to four key management servers.

c. Verify the that the key management servers were added successfully:

```
security key-manager show
```

3. On the new controller module, run the key management setup wizard to set up and install the key management servers.

You must install the same key management servers that are installed on the existing controller module.

a. Launch the key management server setup wizard on the new node:

```
security key-manager setup -node <new_controller_name>
```

b. Complete the steps in the wizard to configure key management servers.

4. Restore authentication keys from all linked key management servers to the new node:

```
security key-manager restore -node <new_controller_name>
```

Set up NetApp Volume Encryption on the new controller module

If the replaced controller or the HA partner of the new controller uses NetApp Volume Encryption (NVE), you must configure the new controller module for NVE.

About this task

This procedure includes steps that are performed on the new controller module. You must enter the command on the correct node.

Steps

1. Verify that the key management servers are still available, their status, and their authentication key information:

```
security key-manager key query -node node
```

2. Add the key management servers listed in the previous step to the key management server list in the new controller:

a. Add the key management server by using the following command:

```
security key-manager -add <key_management_server_ip_address>
```

b. Repeat the previous step for each listed key management server. You can link up to four key management servers.

c. Verify the that the key management servers were added successfully by using the following command:

```
security key-manager show
```

3. On the new controller module, run the key management setup wizard to set up and install the key

management servers.

You must install the same key management servers that are installed on the existing controller module.

a. Launch the key management server setup wizard on the new node by using the following command:

```
security key-manager setup -node <new_controller_name>
```

b. Complete the steps in the wizard to configure key management servers.

4. Restore authentication keys from all linked key management servers to the new node:

For…	Use this command…
External Key Manager (EKM)	`security key-manager external restore` This command needs the OKM passphrase
Onboard Key Manager (OKM)	`security key-manager onboard sync`

After you finish

Check if any volumes were taken offline because authentication keys were not available or external key management servers could not be reached. Bring those volumes back online by using the following command:

```
volume online
```

Decommission the old system

After upgrading, you can decommission the old system through the NetApp Support Site. Decommissioning the system tells NetApp that the system is no longer in operation and removes it from support databases.

Steps

1. Refer to References to link to the *NetApp Support Site* and log in.
2. Select **Products > My Products** from the menu.
3. On the **View Installed Systems** page, choose which **Selection Criteria** you want to use to display information about your system.

   You can choose one of the following to locate your system:

   - Serial Number (located on the back of the unit)
   - Serial Numbers for My Location

4. Select **Go!**

   A table displays cluster information, including the serial numbers.

5. Locate the cluster in the table and select **Decommission this system** from the Product Tool Set drop-down menu.

Resume SnapMirror operations

You can resume SnapMirror transfers that were quiesced before upgrade and resume the

SnapMirror relationships. The updates are on schedule after the upgrade is completed.

Steps

1. Verify the SnapMirror status on the destination:

   ```
   snapmirror show
   ```

2. Resume the SnapMirror relationship:

   ```
   snapmirror resume -destination-vserver <vserver_name>
   ```

Troubleshoot

Troubleshoot

You might encounter a failure while upgrading the node pair. The node might crash, aggregates might not relocate, or LIFs might not migrate. The cause of the failure and its solution depend on when the failure occurred during the upgrade procedure.

Refer to the table describing the different phases of the procedure in the section ARL upgrade workflow. The information about failures that can occur is listed by the phase of the procedure.

- Aggregate relocation failures
- Reboots, panics, or power cycles
- Issues that can arise in multiple stages of the procedure
- LIF migration failure
- LIFs are on invalid ports after upgrade

Aggregate relocation failures

Aggregate relocation (ARL) might fail at different points during the upgrade.

Check for aggregate relocation failure

During the procedure, ARL might fail in Stage 2, Stage 3, or Stage 5.

Steps

1. Enter the following command and examine the output:

   ```
   storage aggregate relocation show
   ```

   The `storage aggregate relocation show` command shows you which aggregates were successfully relocated and which ones were not, along with the causes of failure.

2. Check the console for any EMS messages.
3. Take one of the following actions:

   - Take the appropriate corrective action, depending on the output of the `storage aggregate relocation show` command and the output of the EMS message.

- Force relocation of the aggregate or aggregates by using the `override-vetoes` option or the `override-destination-checks` option of the `storage aggregate relocation start` command.

For detailed information about the `storage aggregate relocation start`, `override-vetoes`, and `override-destination-checks` options, refer to References to link to the *ONTAP 9 Commands: Manual Page Reference*.

Aggregates originally on node1 are owned by node4 after completion of the upgrade

At the end of the upgrade procedure, node3 must be the new home node of aggregates that originally had node1 as the home node. You can relocate them after the upgrade.

About this task

Aggregates might fail to relocate correctly, having node1 as their home node instead of node3 under the following circumstances:

- During Stage 3, when aggregates are relocated from node2 to node3.
  Some of the aggregates being relocated have node1 as their home node. For example, such an aggregate could be called aggr_node_1. If relocation of aggr_node_1 fails during Stage 3, and relocation cannot be forced, then the aggregate will be left behind on node2.
- After Stage 4, when node2 is replaced with node4.
  When node2 is replaced, aggr_node_1 will come online with node4 as its home node instead of node3.

You can fix the incorrect ownership problem after Stage 6 once storage failover has been enabled by completing the following steps:

Steps

1. Enter the following command to get a list of aggregates:

   ```
   storage aggregate show -nodes <node4> -is-home true
   ```

   To identify aggregates that were not correctly relocated, refer to the list of aggregates with the home owner of node1 that you obtained in the section Prepare the nodes for upgrade and compare it with output of the above command.

2. Compare the output of Step 1 with the output you captured for node1 in the section Prepare the nodes for upgrade and note any aggregates that were not correctly relocated.
3. Relocate the aggregates left behind on node4:

   ```
   storage aggregate relocation start -node <node4> -aggr <aggr_node_1>
   -destination <node3>
   ```

   Do not use the `-ndo-controller-upgrade` parameter during this relocation.

4. Enter the following command to verify that node3 is now the home owner of the aggregates:

   ```
   storage aggregate show -aggregate <aggr1,aggr2,aggr3…> -fields home-name
   ```

   `<aggr1,aggr2,aggr3…>` is the list of aggregates that had node1 as the original home owner.

   Aggregates that do not have node3 as home owner can be relocated to node3 using the same relocation command in Step 3.

Reboots, panics, or power cycles

The system might crash – reboot, panic or go through a power cycle – during different stages of the upgrade. The solution to these problems depends on when they occur.

Reboots, panics, or power cycles during Stage 2

Crashes can occur before, during, or immediately after Stage 2, during which you relocate aggregates from node1 to node2, move data LIFs and SAN LIFs owned by node1 to node2, record node1 information, and retire node1.

Node1 or node2 crashes before Stage 2 with HA still enabled

If either node1 or node2 crashes before Stage 2, no aggregates have been relocated yet and the HA configuration is still enabled.

About this task

Takeover and giveback can proceed normally.

Steps

1. Check the console for EMS messages that the system might have issued, and take the recommended corrective action.
2. Continue with the node-pair upgrade procedure.

Node1 crashes during or just after Stage 2 with HA still enabled

Some or all aggregates have been relocated from node1 to node2, and HA is still enabled. Node2 will take over node1's root volume and any non-root aggregates that were not relocated.

About this task

Ownership of aggregates that were relocated looks the same as the ownership of non-root aggregates that were taken over because home owner has not changed.
When node1 enters the `waiting for giveback state`, node2 will give back all the node1 non-root aggregates.

Steps

1. Complete Step 1 in the section *Relocate non-root aggregates from node1 to node2* again.
2. Continue with the node-pair upgrade procedure.

Node1 crashes after Stage 2 while HA is disabled

Node2 will not take over but it is still serving data from all non-root aggregates.

Steps

1. Bring up node1.
2. Continue with the node-pair upgrade procedure.

   You might see some changes in the output of the `storage failover show` command, but that is typical and does not affect the procedure. See the troubleshooting section Unexpected storage failover show command output.

Node2 fails during or after Stage 2 with HA still enabled

Node1 has relocated some or all of its aggregates to node2. HA is enabled.

About this task

Node1 will take over all of node2's aggregates as well any of its own aggregates that it had relocated to node2. When node2 enters the `Waiting for Giveback` state, node1 gives back all of node2's aggregates.

Steps

1. Complete Step 1 in the section *Relocate non-root aggregates from node1 to node2* again.
2. Continue with the node-pair upgrade procedure.

Node2 crashes after Stage 2 and after HA is disabled

Node1 will not take over.

Steps

1. Bring up node2.

   A client outage will occur for all aggregates while node2 is booting up.

2. Continue with the rest of the node pair upgrade procedure.

Reboots, panics, or power cycles during Stage 3

Failures can occur during or immediately after Stage 3, during which you install and boot node3, map ports from node1 to node3, move data LIFs and SAN LIFs belonging to node1 and node2 to node3, and relocate all aggregates from node2 to node3.

Node2 crash during Stage 3 with HA disabled and before relocating any aggregates

Node3 will not take over following a node2 crash as HA is already disabled.

Steps

1. Bring up node2.

   A client outage will occur for all aggregates while node2 is booting up.

2. Continue with the node-pair upgrade procedure.

Node2 crashes during Stage 3 after relocating some or all aggregates

Node2 has relocated some or all of its aggregates to node3, which will serve data from aggregates that were relocated. HA is disabled.

About this task

There will be client outage for aggregates that were not relocated.

Steps

1. Bring up node2.
2. Relocate the remaining aggregates by completing Step 1 through Step 3 in the section *Relocate non-root aggregates from node2 to node3*.

3. Continue with the node-pair upgrade procedure.

Node3 crashes during Stage 3 and before node2 has relocated any aggregates

Node2 does not take over but it is still serving data from all non-root aggregates.

Steps

1. Bring up node3.
2. Continue with the node-pair upgrade procedure.

Node3 crashes during Stage 3 during aggregate relocation

If node3 crashes while node2 is relocating aggregates to node3, node2 will abort the relocation of any remaining aggregates.

About this task

Node2 continues to serve remaining aggregates, but aggregates that were already relocated to node3 encounter client outage while node3 is booting.

Steps

1. Bring up node3.
2. Complete Step 3 again in the section *Relocate non-root aggregates from node2 to node3*.
3. Continue with the node-pair upgrade procedure.

Node3 fails to boot after crashing in Stage 3

Because of a catastrophic failure, node3 cannot be booted following a crash during Stage 3.

Step

1. Contact technical support.

Node2 crashes after Stage 3 but before Stage 5

Node3 continues to serve data for all aggregates. The HA pair is disabled.

Steps

1. Bring up node2.
2. Continue with the node-pair upgrade procedure.

Node3 crashes after Stage 3 but before Stage 5

Node3 crashes after Stage 3 but before Stage 5. The HA pair is disabled.

Steps

1. Bring up node3.

   There will be a client outage for all aggregates.

2. Continue with the node-pair upgrade procedure.

Reboots, panics, or power cycles during Stage 5

Crashes can occur during Stage 5, the stage in which you install and boot node4, map ports from node2 to node4, move data LIFs and SAN LIFs belonging to node2 from node3 to node4, and relocate all of node2's aggregates from node3 to node4.

Node3 crashes during Stage 5

Node3 has relocated some or all of node2's aggregates to node4. Node4 does not take over but continues to serve non-root aggregates that node3 already relocated. The HA pair is disabled.

About this task

There is an outage for the rest of the aggregates until node3 boots again.

Steps

1. Bring up node3.
2. Relocate the remaining aggregates that belonged to node2 by repeating Step 1 through Step 3 in the section *Relocate node2's non-root aggregates from node3 to node4*.
3. Continue with the node pair upgrade procedure.

Node4 crashes during Stage 5

Node3 has relocated some or all of node2's aggregates to node4. Node3 does not take over but continues to serve non-root aggregates that node3 owns as well as those that were not relocated. HA is disabled.

About this task

There is an outage for non-root aggregates that were already relocated until node4 boots again.

Steps

1. Bring up node4.
2. Relocate the remaining aggregates that belonged to node2 by again completing Step 1 through Step 3 in *Relocate node2's non-root aggregates from node3 to node4*.
3. Continue with the node-pair upgrade procedure.

Issues that can arise in multiple stages of the procedure

Some issues can occur during different stages of the procedure.

Unexpected "storage failover show" command output

During the procedure, if the node that hosts all data aggregates panics or is rebooted accidentally, you might see unexpected output for the `storage failover show` command before and after the reboot, panic, or power cycle.

About this task

You might see unexpected output from the `storage failover show` command in Stage 2, Stage 3, Stage 4, or Stage 5.

The following example shows the expected output of the `storage failover show` command if there are no reboots or panics on the node that hosts all the data aggregates:

```
cluster::> storage failover show

                    Takeover
Node     Partner    Possible  State Description
-------  --------  --------- -----------------
node1    node2     false     Unknown
node2    node1     false     Node owns partner aggregates as part of the
non-disruptive head upgrade procedure. Takeover is not possible: Storage
failover is disabled.
```

The following example shows the output of the `storage failover show` command after a reboot or panic:

```
cluster::> storage failover show

                    Takeover
Node     Partner    Possible  State Description
-------  --------  --------- -----------------
node1    node2     -         Unknown
node2    node1    false      Waiting for node1, Partial giveback, Takeover
is not possible: Storage failover is disabled
```

Although the output says that a node is in partial giveback and that storage failover is disabled, you can disregard this message.

Steps

No action is required; continue with the node-pair upgrade procedure.

LIF migration failure

After you migrate LIFs, they might not come online after migration in Stage 2, Stage 3, or Stage 5.

Steps

1. Verify that the port MTU size is the same as that of the source node.

   For example, if the cluster port MTU size is 9000 on the source node, it should be 9000 on the destination node.

2. Check the physical connectivity of the network cable if the physical state of the port is "down".

LIFs are on invalid ports after upgrade

After the upgrade is completed, the FC logical interfaces (LIFs) might be left on incorrect ports if you have a MetroCluster configuration. You can perform a resync operation to reassign the LIFs to the correct ports.

Step

1. Enter the `metrocluster vserver resync` command to reallocate the LIFs to the correct ports.

```
metrocluster vserver resync -vserver <vserver_name> fcp-mc.headupgrade.test.vs
```

References

When performing the procedures in this content, you might need to consult reference content or go to reference websites.

- Reference content
- Reference sites

Reference content

Content specific to this upgrade are listed in the table below.

Content	Description
Administration overview with the CLI	Describes how to administer ONTAP systems, shows you how to use the CLI interface, how to access the cluster, how to manage nodes, and much more.
Decide whether to use System Manager or the ONTAP CLI for cluster setup	Describes how to set up and configure ONTAP.
Disk and aggregate management with the CLI	Describes how to manage ONTAP physical storage using the CLI. It shows you how to create, expand, and manage aggregates, how to work with Flash Pool aggregates, how to manage disks, and how to manage RAID policies.
Fabric-attached MetroCluster Installation and Configuration	Describes how to install and configure the MetroCluster hardware and software components in a fabric configuration.
FlexArray Virtualization Installation Requirements and Reference	Contains cabling instructions and other information for FlexArray Virtualization systems.
High Availability management	Describes how to install and manage high-availability clustered configurations, including storage failover and takeover/giveback.
Logical storage management with the CLI	Describes how to efficiently manage your logical storage resources, using volumes, FlexClone volumes, files, and LUNs, FlexCache volumes, deduplication, compression, qtrees, and quotas.
MetroCluster Management and Disaster Recovery	Describes how to perform MetroCluster switchover and switchback operations, both in planned maintenance operations, or in the event of a disaster.
MetroCluster Upgrade and Expansion	Provides procedures for upgrading controller and storage models in the MetroCluster configuration, transitioning from a MetroCluster FC to a MetroCluster IP configuration, and expanding the MetroCluster configuration by adding additional nodes.

Content	Description
Network Management	Describes how to configure and manage physical and virtual network ports (VLANs and interface groups), LIFs, routing, and host-resolution services in clusters; optimize network traffic by load balancing; and monitor the cluster by using SNMP.
ONTAP 9.0 Commands: Manual Page Reference	Describes syntax and usage of supported ONTAP 9.0 commands.
ONTAP 9.1 Commands: Manual Page Reference	Describes syntax and usage of supported ONTAP 9.1 commands.
ONTAP 9.2 Commands: Manual Page Reference	Describes syntax and usage of supported ONTAP 9.2 commands.
ONTAP 9.3 Commands: Manual Page Reference	Describes syntax and usage of supported ONTAP 9.3 commands.
ONTAP 9.4 Commands: Manual Page Reference	Describes syntax and usage of supported ONTAP 9.4 commands.
ONTAP 9.5 Commands: Manual Page Reference	Describes syntax and usage of supported ONTAP 9.5 commands.
ONTAP 9.6 Commands: Manual Page Reference	Describes syntax and usage of supported ONTAP 9.6 commands.
ONTAP 9.7 Commands: Manual Page Reference	Describes syntax and usage of supported ONTAP 9.7 commands.
ONTAP 9.8 Commands: Manual Page Reference	Describes syntax and usage of supported ONTAP 9.8 commands.
ONTAP 9.9.1 Commands: Manual Page Reference	Describes syntax and usage of supported ONTAP 9.9.1 commands.
ONTAP 9.10.1 Commands: Manual Page Reference	Describes syntax and usage of supported ONTAP 9.10.1 commands.
SAN management with the CLI	Describes how to configure and manage LUNs, igroups, and targets using the iSCSI and FC protocols, and namespaces and subsystems using the NVMe/FC protocol.
SAN configuration reference	Contains information about FC and iSCSI topologies and wiring schemes.
Upgrade by moving volumes or storage	Describes how to quickly upgrade controller hardware in a cluster by moving storage or volumes. Also describes how to convert a supported model to a disk shelf.
Upgrade ONTAP	Contains instructions for downloading and upgrading ONTAP.
Use "system controller replace" commands to upgrade AFF A700 to AFF A900 running ONTAP 9.10.1 or later	Describes the aggregate relocation procedures needed to non-disruptively upgrade an AFF A700 to an AFF A900 running ONTAP 9.10.1 or later by using "system controller replace" commands.
Use "system controller replace" commands to upgrade controller hardware running ONTAP 9.8 or later	Describes the aggregate relocation procedures needed to non-disruptively upgrade controllers running ONTAP 9.8 by using "system controller replace" commands.

Content	Description
Use aggregate relocation to manually upgrade controller hardware running ONTAP 9.8 or later	Describes the aggregate relocation procedures needed to perform manual non-disruptive controller upgrades running ONTAP 9.8 or later.
Use "system controller replace" commands to upgrade controller hardware running ONTAP 9.5 to ONTAP 9.7	Describes the aggregate relocation procedures needed to non-disruptively upgrade controllers running ONTAP 9.5 to ONTAP 9.7 by using "system controller replace" commands.
Use aggregate relocation to manually upgrade controller hardware running ONTAP 9.7 or earlier	Describes the aggregate relocation procedures needed to perform manual non-disruptive controller upgrades running ONTAP 9.7 or earlier.

Reference sites

The NetApp Support Site also contains documentation about network interface cards (NICs) and other hardware that you might use with your system. It also contains the Hardware Universe, which provides information about the hardware that the new system supports.

Access ONTAP 9 documentation.

Access the Active IQ Config Advisor tool.

Use "system controller replace" commands to upgrade controller hardware running ONTAP 9.5 to 9.7

Overview

This procedure describes how to upgrade the controller hardware using aggregate relocation (ARL) for the following system configurations:

Method	ONTAP version	Supported systems
Using `system controller replace` commands	9.5 to 9.7	Link to supported systems matrix

During the procedure, you upgrade the original controller hardware with the replacement controller hardware, relocating the ownership of non-root aggregates. You migrate aggregates multiple times from node to node to confirm that at least one node is serving data from the aggregates throughout the upgrade procedure. You also migrate data logical interfaces (LIFs) and assign the network ports on the new controller to the interface groups as you proceed.

Terminology used in this information

In this information, the original nodes are called "node1" and "node2", and the new nodes are called "node3" and "node4". During the described procedure, "node1" is replaced by "node3", and "node2" is replaced by "node4".

The terms "node1", "node2", "node3", and "node4" are used only to distinguish between the original and new nodes. When following the procedure, you must substitute the real names of your original and new nodes. However, in reality, the names of the nodes do not change: "node3" has the same name as "node1", and "node4" has the same name as "node2" after the controller hardware is upgraded.

Throughout this information, the term "systems with FlexArray Virtualization Software" refers to systems that belong to these new platforms. The term "V-Series system" refers to the separate hardware systems that can attach to storage arrays.

Important information:

- This procedure is complex and assumes that you have advanced ONTAP administration skills. You also must read and understand Guidelines for upgrading controllers with ARL and the Overview of the ARL upgrade before beginning the upgrade.
- This procedure assumes that the replacement controller hardware is new and has not been used. The steps required to prepare used controllers with the `wipeconfig` command are not included in this procedure. You must contact technical support if the replacement controller hardware was previously used, especially if the controllers were running Data ONTAP in 7-Mode.
- You can use this procedure to upgrade the controller hardware in clusters with more than two nodes; however, you need to perform the procedure separately for each HA pair in the cluster.
- This procedure applies to FAS systems, V-Series systems, AFF systems, and systems with FlexArray Virtualization Software. FAS systems released after ONTAP 9.5 can attach to storage arrays if the required license is installed. The existing V-Series systems are supported in ONTAP 9.5. For more information about the storage array and V-Series models, refer to References to link to the *Hardware Universe* and go to the V-Series Support Matrix.
- Starting with ONTAP 9.6, this procedure applies to systems running 4-node MetroCluster configuration or higher. Because MetroCluster configuration sites can be at two physically different locations, the automated controller upgrade must be carried out individually at each MetroCluster site for an HA pair.
- If you are upgrading from an AFF A320 system, you can use volume moves to upgrade controller hardware or contact technical support. If you are willing to do volume moves, refer to References to link to *Upgrade by moving volumes or storage*.

Automate the controller upgrade process

During a controller upgrade, the controller is replaced with another controller running a newer or more powerful platform.

Earlier versions of this content contained instructions for a nondisruptive controller update process that was comprised of entirely manual steps. This content provides the steps for the new automated procedure.

The manual process was lengthy and complex but in this simplified procedure you can implement a controller update using aggregate relocation, which enables more efficient nondisruptive upgrades for HA pairs. There are significantly fewer manual steps, especially around validation, collection of information, and post checks.

Decide whether to use the aggregate relocation procedure

This content describes how to upgrade the storage controllers in an HA pair with new controllers while keeping all the existing data and disks. This is a complex procedure that should be used only by experienced administrators.

Use this content under the following circumstances:

- You are upgrading NetApp controllers running ONTAP 9.5, 9.6 or 9.7. This document is not applicable to upgrades to ONTAP 9.8.
- You do not want to add the new controllers as a new HA pair to the cluster and migrate the data using volume moves.

- You are experienced in administering ONTAP and are comfortable with the risks of working in the diagnostic privilege mode.
- If you are upgrading a MetroCluster configuration, it is a 4-node or higher FC configuration, and all nodes are running ONTAP 9.6 or 9.7.

You can use NetApp Storage Encryption (NSE) and NetApp Volume Encryption (NVE) with this procedure.

The following tables shows the supported model matrix for the controller upgrade.

Old controller	Replacement controller
FAS8020, FAS8040, FAS8060, FAS8080	FAS8200, FAS8300, FAS8700, FAS9000
AFF8020, AFF8040, AFF8060, AFF8080	AFF A300, AFF A400, AFF A700[1], AFF A800[2]
FAS8200	FAS8700, FAS9000, FAS8300[4, 5]
AFF A300	AFF A700[1], AFF A800[2, 3], AFF A400[4, 5]

If your controller upgrade model combination is not in the above table, contact technical support.

[1]ARL automated upgrade for the AFF A700 system is supported from ONTAP 9.7P2.

[2]If you are updating to an AFF A800 or a system that supports internal and external disks, you must follow specific instructions for the root aggregate on internal NVMe disks. See Check and configure UTA/UTA2 ports on node3, Step 14 and Check and configure UTA/UTA2 ports on node4, Step 14.

[3]ARL automated upgrade from an AFF A300 to an AFF A800 system is supported from ONTAP 9.7P5.

[4]ARL automated upgrade from an AFF A300 to an AFF A400 and an FAS8200 to an FAS8300 system is supported from ONTAP 9.7P8.

[5]If you are upgrading from an AFF A300 to an AFF A400 or an FAS8200 to an FAS8300 system in a two-node switchless cluster configuration, you must pick temporary cluster ports for the controller upgrade. The AFF A400 and FAS8300 systems come in two configurations, as an Ethernet bundle where the mezzanine card ports are Ethernet type and as an FC bundle where the mezzanine ports are FC type.

- For an AFF A400 or an FAS8300 with an Ethernet type configuration, you can use any of the two mezzanine ports as temporary cluster ports.
- For an AFF A400 or an FAS8300 with an FC type configuration, you must add a four-port 10GbE network interface card (part number X1147A) to provide temporary cluster ports.
- After you complete a controller upgrade by using temporary cluster ports, you can nondisruptively migrate cluster LIFs to e3a and e3b, 100GbE ports on an AFF A400 system, and e0c and e0d, 100GbE ports on an FAS8300 system.

If you prefer a different method of upgrading the controller hardware and are willing to do volume moves, refer to References to link to *Upgrade by moving volumes or storage*.

Refer to References to link to the *ONTAP 9 Documentation Center* where you can access ONTAP 9 product documentation.

Required tools and documentation

You must have specific tools to install the new hardware, and you need to reference other documents during the upgrade process.

You need the following tools to perform the up grade:

- Grounding strap
- #2 Phillips screwdriver

Go to the References section to access the list of reference documents and reference sites required for this upgrade

Guidelines for upgrading controllers with ARL

To understand whether you can use aggregate relocation (ARL) to upgrade a pair of controllers running ONTAP 9.5 to ONTAP 9.7 depends on the platform and the configuration of both the original and replacement controllers.

Supported upgrades for ARL

When you upgrade a pair of nodes using this ARL procedure for ONTAP 9.5 to ONTAP 9.7, you must verify that ARL can be performed on the original and replacement controllers.

You should check the size of all defined aggregates and number of disks supported by the original system. You must then compare the aggregate sizes and number of disks supported to the aggregate size and number of disks supported by the new system. Refer to References to link to the *Hardware Universe* where this information is available. The aggregate size and the number of disks supported by the new system must be equal to or greater than the aggregate size and number of disks supported by the original system.

You should validate in the cluster mixing rules whether new nodes can become part of the cluster with the existing nodes, when the original controller is replaced. For more information about cluster mixing rules, refer to References to link to the *Hardware Universe*.

Before performing an AFF system upgrade, you must upgrade ONTAP to release versions 9.5P1 or later. These release levels are required for a successful upgrade.

If you are upgrading a system that supports internal drives (for example, an FAS2700 or AFF A250) but does NOT have internal drives, refer to References and use the procedure in the *Aggregate Relocation to Manually Upgrade Controller Hardware* content that is correct for your version of ONTAP.

If you are using ONTAP 9.6P11, 9.7P8, or later releases, it is recommended to enable Connectivity, Liveliness, and Availability Monitor (CLAM) takeover to return the cluster into quorum when certain node failures occur. The `kernel-service` command requires advanced privilege level access. For more information, see: NetApp KB Article SU436: CLAM takeover default configuration changed.

Controller upgrade using ARL is supported on systems configured with SnapLock Enterprise andSnapLock Compliance volumes.

Two-node switchless clusters

If you are upgrading nodes in a two-node switchless cluster, you can leave the nodes in the switchless cluster while performing the upgrade. You do not need to convert them to a switched cluster.

Upgrades not supported for ARL

You cannot perform the following upgrades:

- To replacement controllers that do not support the disk shelves connected to the original controllers

  Refer to References to link to the *Hardware Universe* for disk-support information.

- To entry level controllers with internal drives, for example: an FAS 2500.

  If you want to upgrade entry level controllers with internal drives, refer to References to link to *Upgrade by moving volumes or storage* and go to the procedure *Upgrading a pair of nodes running clustered Data ONTAP by moving volumes*.

Troubleshooting

If any problems occur while upgrading the controllers, you can refer to the Troubleshoot section at the end of the procedure for more information and possible solutions.

If you do not find a solution to the problem you encountered, contact technical support.

Verify the health of the MetroCluster configuration

Before starting an upgrade on a Fabric MetroCluster configuration, you must check the health of the MetroCluster configuration to verify proper operation.

Steps

1. Verify that the MetroCluster components are healthy:

   `metrocluster check run`

   ```
   dpgqa-mcc-funct-8040-0403_siteA::*> metrocluster check run
   ```

   The operation runs in the background.

2. After the `metrocluster check run` operation completes, view the results:

   `metrocluster check show`

   After approximately five minutes, the following results are displayed:

```
metrocluster_siteA::*> metrocluster check show
Last Checked On: 4/7/2019 21:15:05
Component            Result
---------------      -------
nodes                ok
lifs                 ok
config-replication   ok
aggregates           warning
clusters             ok
connections          not-applicable
volumes              ok
7 entries were displayed.
```

3. Check the status of the running MetroCluster check operation:

   ```
   metrocluster operation history show -job-id 38
   ```

4. Verify that there are no health alerts:

   ```
   system health alert show
   ```

Check for MetroCluster configuration errors

You can use the Active IQ Config Advisor tool available from the NetApp Support Site to check for common configuration errors.

About this task

Active IQ Config Advisor is a configuration validation and health check tool. You can deploy it at both secure sites and non-secure sites for data collection and system analysis.

Support for Config Advisor is limited, and available only online.

1. Download the Active IQ Config Advisor tool.
2. Run Active IQ Config Advisor, reviewing the output and following its recommendations to address any issues.

Verify switchover, healing, and switchback

You should verify the switchover, healing, and switchback operations of the MetroCluster configuration.

Refer to References to link to the *MetroCluster Management and Disaster Recovery* content and use the procedures mentioned for negotiated switchover, healing, and switchback.

Overview of the ARL upgrade

Before you upgrade the nodes using ARL, you should understand how the procedure

works. In this content, the procedure is broken down into several stages.

Upgrade the node pair

To upgrade the node pair, you need to prepare the original nodes and then perform a series of steps on both the original and new nodes. You can then decommission the original nodes.

ARL upgrade sequence overview

During the procedure, you upgrade the original controller hardware with the replacement controller hardware, one controller at a time, taking advantage of the HA pair configuration to relocate the ownership of non-root aggregates. All non-root aggregates must undergo two relocations to reach their final destination, which is the correct upgraded node.

Each aggregate has a home owner and current owner. The home owner is the actual owner of the aggregate, and the current owner is the temporary owner.

The following table describes the high-level tasks you perform during each stage and the state of aggregate ownership at the end of the stage. Detailed steps are provided later in the procedure:

Stage	Steps
Stage 1. Prepare for the upgrade	1. Run prechecks to verify that you can perform the operation. 2. Prepare for netbooting (optional). Aggregate ownership at the end of Stage 1: • Node1 is the home owner and current owner of the node1 aggregates. • Node2 is the home owner and current owner of the node2 aggregates.
Stage 2. Relocate and retire node1	1. Move non-root aggregates from node1 to node2. 2. Move non-SAN data LIFs owned by node1 to node2. 3. Retire node1. Aggregate ownership at the end of Stage 2: • Node2 is the current owner of node1 aggregates. • Node2 is the home owner and current owner of node2 aggregates.

Stage	Steps
Stage 3. Install and boot node3	1. Install and boot node3. 2. Set the FC or CNA configuration. 3. Map ports from node1 to node3. 4. Verify node3 is successfully installed. 5. Move non-SAN data LIFs owned by node1 from node2 to node3. 6. Relocate non-root aggregates owned by node1 from node2 to node3. Aggregate ownership at the end of Stage 3: • Node3 is the home owner and current owner of node1 aggregates. • Node2 is the home owner and current owner of node2 aggregates.
Stage 4. Relocate and retire node2	1. Relocate non-root aggregates from node2 to node3. 2. Move non-SAN data LIFs owned by node2 to node3. 3. Retire node2. Aggregate ownership at the end of Stage 4: • Node3 is the home owner and current owner of aggregates that originally belonged to node1. • Node2 is the home owner of node2 aggregates. • Node3 is the current owner of node2 aggregates.
Stage 5. Install and boot node4	1. Install and boot node4. 2. Set the FC or CNA configuration on node4. 3. Map ports from node2 to node4. 4. Verify the node4 installation. 5. Relocate non-SAN data LIFs owned by node2 from node3 to node4 and verify the SAN LIFs on node4. Aggregate ownership at the end of Stage 5: • Node3 is the home owner and current owner of the aggregates that originally belonged to node1. • Node4 is the home owner and current owner of aggregates that originally belonged to node2.
Stage 6. Complete the upgrade	1. Verify the system is set up correctly. 2. Set up Storage Encryption on the new controller module. 3. Resume SnapMirror operations if needed.

Stage 1. Prepare for upgrade

Stage 1. Prepare for upgrade

During Stage 1, you must prepare the nodes for the upgrade and run a series of prechecks. You might need to rekey disks for Storage Encryption. You must also prepare to netboot the new controllers.

Steps

1. Prepare the nodes for upgrade
2. Get an IP address of an external key management server for storage encryption

Prepare the nodes for upgrade

You must perform the following steps to prepare the nodes for upgrade.

Steps

1. Begin the controller replacement process by entering the following command in the ONTAP command line:

   ```
   system controller replace start -nodes <node_names>
   ```

   This command can only be executed at the advanced privilege level:
   `set -privilege advanced`

   You will see the following output:

   ```
   Warning:
   1. Current ONTAP version is 9.x
   Before starting controller replacement operation, ensure that the new
   controllers are running the version 9.x

   2. Verify that NVMEM or NVRAM batteries of the new nodes are charged,
   and charge them if they are not. You need to physically check the new
   nodes to see if the NVMEM or NVRAM  batteries are charged. You can check
   the battery status either by connecting to a serial console or using
   SSH, logging into the Service Processor (SP) or Baseboard Management
   Controller (BMC) for your system, and use the system sensors to see if
   the battery has a sufficient charge.

   Attention: Do not try to clear the NVRAM contents. If there is a need to
   clear the contents of NVRAM, contact NetApp technical support.

   3. If a controller was previously part of a different cluster, run
   wipeconfig before using it as the replacement controller.

   Do you want to continue? {y|n}: y
   ```

2. Press `y`, you will see the following output:

```
Controller replacement operation: Prechecks in progress.
Controller replacement operation has been paused for user intervention.
```

The system runs the following prechecks; record the output of each precheck for use later in the procedure:

Precheck	Description
Cluster Health Check	Checks all the nodes in the cluster to confirm they are healthy.
MCC Cluster Check	Checks if the system is a MetroCluster configuration. The operation automatically detects if it is a MetroCluster configuration or not and performs the specific prechecks and verification checks. Only 4-node MetroCluster FC configuration is supported. In the case of 2-node MetroCluster configuration and 4-node MetroCluster IP configuration, the check fails. If the MetroCluster configuration is in switched over state, the check fails.
Aggregate Relocation Status Check	Checks whether an aggregate relocation is already in progress. If another aggregate relocation is in progress, the check fails.
Model Name Check	Checks whether the controller models are supported for this procedure. If the models are not supported, the task fails.
Cluster Quorum Check	Checks that the nodes being replaced are in quorum. If the nodes are not in quorum, the task fails.
Image Version Check	Checks that the nodes being replaced run the same version of ONTAP. If the ONTAP image versions are different, the task fails. The new nodes must have the same version of ONTAP 9.x installed on them that is installed on the original nodes. If the new nodes have a different version of ONTAP installed, you need to netboot the new controllers after you install them. For instructions on how to upgrade ONTAP, refer to References to link to *Upgrade ONTAP*.
HA Status Check	Checks if both the nodes being replaced are in a high- availability (HA) pair configuration. If storage failover is not enabled for the controllers, the task fails.
Aggregate Status Check	If the nodes being replaced own aggregates for which they are not the home owner, the task fails. The nodes should not own any non-local aggregates.
Disk Status Check	If any nodes being replaced have missing or failed disks, the task fails. If any disks are missing, refer to References to link to *Disk and aggregate management with the CLI*, *Logical storage management with the CLI*, and *High Availability management* to configure storage for the HA pair.

Precheck	Description
Data LIF Status Check	Checks if any of the nodes being replaced have non- local data LIFs. The nodes should not contain any data LIFs for which they are not the home owner. If one of the nodes contains non-local data LIFs, the task fails.
Cluster LIF Status	Checks whether the cluster LIFs are up for both nodes. If the cluster LIFs are down, the task fails.
ASUP Status Check	If ASUP notifications are not configured, the task fails. You must enable ASUP before beginning the controller replacement procedure.
CPU Utilization Check	Checks if the CPU utilization is more than 50% for any of the nodes being replaced. If the CPU usage is more than 50% for a considerable period of time, the task fails.
Aggregate Reconstruction Check	Checks if reconstruction is occurring on any data aggregates. If aggregate reconstruction is in progress, the task fails.
Node Affinity Job Check	Checks if any node affinity jobs are running. If node affinity jobs are running, the check fails.

3. After the controller replacement operation is started and the prechecks are completed, the operation pauses enabling you to collect output information that you might need later when configuring node3.
4. Run the below set of commands as directed by the controller replacement procedure on the system console.

   You must run and save the output of the following commands individually:

   - `vserver services name-service dns show`
   - `network interface show -curr-node <nodename> -role cluster,intercluster,node-mgmt,clustermgmt, data`
   - `network port show -node <nodename> -type physical`
   - `service-processor show -node * -instance`
   - `network fcp adapter show -node <node_name>`
   - `network port ifgrp show`
   - `network port vlan show`
   - `system node show -instance -node <nodename>`
   - `run -node <node_name> sysconfig`
   - `storage aggregate show -node <nodename>`
   - `volume show -node <node_name>`
   - `network interface failover-groups show`
   - `storage array config show -switch <switch_name>`

- `system license show -owner <node_name>`
- `storage encryption disk show`

If NetApp Volume Encryption using Onboard Key Manager is in use, keep the key manager passphrase ready to complete the key manager resync later in the procedure.

Correct aggregate ownership if an ARL precheck fails

If the Aggregate Status Check fails, you must return aggregates owned by the partner node to the home owner node and initiate the precheck process again.

Steps

1. Return the aggregates currently owned by the partner node to the home owner node:

   ```
   storage aggregate relocation start -node <source_node> -destination
   <destination-node> - aggregate-list *
   ```

2. Verify that neither node1 nor node2 still owns aggregates for which it is the current owner (but not the home owner):

   ```
   storage aggregate show -nodes <node_name> -is-home false -fields owner-
   name,home- name,state
   ```

   The following example shows the output of the command when a node is both the current owner and home owner of aggregates:

   ```
   cluster::> storage aggregate show -nodes node1 -is-home true -fields
   owner-name,home-name,state
   aggregate   home-name  owner-name  state
   ---------   ---------  ----------  ------
   aggr1       node1      node1       online
   aggr2       node1      node1       online
   aggr3       node1      node1       online
   aggr4       node1      node1       online

   4 entries were displayed.
   ```

After you finish

You must restart the controller replacement process:

```
system controller replace start -nodes <node_names>
```

License

When you set up a cluster, the setup wizard prompts you to enter the cluster-base license key. However, some features require additional licenses, which are issued as *packages* that include one or more features. Each node in the cluster must have its own key for each feature to be used in the cluster.

If you do not have new license keys, currently licensed features in the cluster are available to the new controller. However, using unlicensed features on the controller might put you out of compliance with your license agreement, so you should install the new license key or keys for the new controller after the upgrade is complete.

Refer to References to link to the *NetApp Support Site* where you can obtain new 2-character license keys for ONTAP. The keys are available in the *My Support* section under *Software licenses*. If the site does not have the license keys you need, you can contact your NetApp sales representative.

For detailed information about licensing, refer to References to link to the *System Administration Reference*.

Get an IP address of an external key management server for storage encryption

After upgrading, you must immediately configure Storage Encryption and establish a cluster-wide authentication key to replace the previous node-level authentication keys.

Steps

1. Install the necessary client and server secure sockets layer (SSL) certificates required to communicate with key management servers:

   ```
   security certificate install
   ```

2. Configure Storage Encryption on all nodes by using the following command on each node:

   ```
   security key-manager setup
   ```

3. Add the IP address for each key management server:

   ```
   security key-manager add
   ```

4. Verify that the same key management servers are configured and available on all nodes in the cluster:

   ```
   security key-manager show -status
   ```

5. Create a new cluster-wide authentication key:

   ```
   security key-manager create-key
   ```

6. Make a note of the new authentication key ID.
7. Rekey all self-encrypting drives with the new authentication key:

   ```
   storage encryption disk modify -disk * -data-key-id <authentication_key_id>
   ```

Manage authentication using KMIP servers

With ONTAP 9.5 to 9.7, you can use Key Management Interoperability Protocol (KMIP) servers to manage authentication keys.

Steps

1. Add a new controller:

   ```
   security key-manager setup -node <new_controller_name>
   ```

2. Add the key manager:

   ```
   security key-manager -add <key_management_server_ip_address>
   ```

3. Verify that the key management servers are configured and available to all nodes in the cluster:

   ```
   security key-manager show -status
   ```

4. Restore the authentication keys from all linked key management servers to the new node:

   ```
   security key-manager restore -node <new_controller_name>
   ```

5. Rekey all self-encrypting disks with the new authentication key:

   ```
   storage encryption disk modify -disk * [-data-key-id nonMSID AK]
   ```

6. If you use the Federal Information Processing Standard (FIPS), rekey all self-encrypting disks with the new authentication key:

   ```
   storage encryption disk modify -disk * [-fips-key-id nonMSID AK]
   ```

Manage storage encryption using Onboard Key Manager

You can use the OKM to manage encryption keys. If you plan to use OKM, you must record the passphrase and backup material before beginning the upgrade.

Steps

1. Save the passphrase to a secure location.
2. Create a backup for recovery purposes. Run the following command and save the output:

   ```
   key-manager onboard show-backup
   ```

Manage storage encryption using Onboard Key Manager

You can use the OKM to manage encryption keys. If you plan to use OKM, you must record the passphrase and backup material before beginning the upgrade.

Steps

1. Save the passphrase to a secure location.
2. Create a backup for recovery purposes. Run the following command and save the output:

   ```
   security key-manager onboard show-backup
   ```

Quiesce the SnapMirror relationships (optional)

Before continuing with the procedure, you must confirm that all the SnapMirror relationships are quiesced. When a SnapMirror relationship is quiesced, it remains quiesced across reboots and failovers.

Steps

1. Verify the SnapMirror relationship status on the destination cluster:

```
snapmirror show
```

If the status is "Transferring", you must abort those transfers:
`snapmirror abort -destination-vserver <vserver_name>`

The abort fails if the SnapMirror relationship is not in the "Transferring" state.

2. Quiesce all relationships between the cluster:

```
snapmirror quiesce -destination-vserver <vserver_name>
```

Stage 2. Relocate and retire node1

Stage 2. Relocate and retire node1

During Stage 2, you relocate the node1 aggregates and LIFs to node2, record node1 information, and then retire node1. This process is largely automated; the operation pauses to enable you to check its status. You must manually resume the operation.

Steps

1. Relocate non-root aggregates and NAS data LIFs owned by node1 to node2
2. Relocate failed or vetoed aggregates
3. Retire node1
4. Prepare for netboot

Relocate non-root aggregates and NAS data LIFs owned by node1 to node2

Before you can replace node1 with node3, you must move the non-root aggregates and NAS data LIFs from node1 to node2 before eventually moving node1's resources to node3.

Before you begin

The operation must already be paused when you begin the task; you must manually resume the operation.

About this task

Remote LIFs handle traffic to SAN LUNs during the upgrade procedure. Moving SAN LIFs is not necessary for cluster or service health during the upgrade. You must verify that the LIFs are healthy and located on appropriate ports after you bring node3 online.

The home owner for the aggregates and LIFs is not modified; only the current owner is modified.

Steps

1. Resume the aggregate relocation and NAS data LIF move operations:

```
system controller replace resume
```

All the non-root aggregates and NAS data LIFs are migrated from node1 to node2.

The operation pauses to enable you to verify whether all node1 non-root aggregates and non-SAN data

LIFs have been migrated to node2.

2. Check the status of the aggregate relocation and NAS data LIF move operations:

   `system controller replace show-details`

3. With the operation still paused, verify that all the non-root aggregates are online for their state on node2:

   `storage aggregate show -node <node2> -state online -root false`

   The following example shows that the non-root aggregates on node2 are online:

```
cluster::> storage aggregate show -node node2 state online -root false

Aggregate  Size     Available  Used%  State  #Vols  Nodes  RAID Status
---------  -------  ---------  -----  ------ -----  ------
--------------
aggr_1     744.9GB  744.8GB    0%     online     5  node2
raid_dp,normal
aggr_2     825.0GB  825.0GB    0%     online     1  node2
raid_dp,normal
2 entries were displayed.
```

   If the aggregates have gone offline or become foreign on node2, bring them online by using the following command on node2, once for each aggregate:

   `storage aggregate online -aggregate <aggr_name>`

4. Verify that all the volumes are online on node2 by using the following command on node2 and examining its output:

   `volume show -node <node2> -state offline`

   If any volumes are offline on node2, bring them online by using the following command on node2, once for each volume:

   `volume online -vserver <vserver_name> -volume <volume_name>`

   The `<vserver_name>` to use with this command is found in the output of the previous `volume show` command.

5. If the ports currently hosting data LIFs will not exist on the new hardware, remove them from the broadcast domain:

   `network port broadcast-domain remove-ports`

6. If any LIFs are down, set the administrative status of the LIFs to `up` by entering the following command, once for each LIF:

   `network interface modify -vserver <vserver_name> -lif <LIF_name>-home-node <nodename> -status-admin up`

7. If you have interface groups or VLANs configured, complete the following substeps:
   a. If you have not already saved them, record the VLAN and interface group information so you can re-create the VLANs and interface groups on node3 after node3 is booted up.
   b. Remove the VLANs from the interface groups:

      ```
      network port vlan delete -node <nodename> -port <ifgrp> -vlan-id <VLAN_ID>
      ```

      Follow the corrective action to resolve any errors that are suggested by the vlan delete command.

   c. Enter the following command and examine its output to see if there are any interface groups configured on the node:

      ```
      network port ifgrp show -node <nodename> -ifgrp <ifgrp_name> -instance
      ```

      The system displays interface group information for the node as shown in the following example:

      ```
      cluster::> network port ifgrp show -node node1 -ifgrp a0a -instance
                        Node: node1
       Interface Group Name: a0a
      Distribution Function: ip
              Create Policy: multimode_lacp
                MAC Address: 02:a0:98:17:dc:d4
         Port Participation: partial
              Network Ports: e2c, e2d
                   Up Ports: e2c
                 Down Ports: e2d
      ```

   d. If any interface groups are configured on the node, record the names of those groups and the ports assigned to them, and then delete the ports by entering the following command, once for each port:

      ```
      network port ifgrp remove-port -node <nodename> -ifgrp <ifgrp_name> -port
      <netport>
      ```

Relocate failed or vetoed aggregates

If any aggregates fail to relocate or are vetoed, you must take manually relocate the aggregates, or override either the vetoes or destination checks, if necessary.

About this task

The relocation operation will have paused due to the error.

Steps

1. Check the EMS logs to determine why the aggregate failed to relocate or was vetoed.
2. Relocate any failed or vetoed aggregates:

   ```
   storage aggregate relocation start -node <node1> -destination <node2>
   ```

```
aggregate-list * -ndocontroller-upgrade true
```

3. When prompted, enter `y`.
4. You can force relocation by using one of the following methods:

Option	Description
Overriding veto checks	Enter the following: `storage aggregate relocation start -override -vetoes * -ndocontroller-upgrade true`
Overriding destination checks	Enter the following: `storage aggregate relocation start -overridedestination-checks * -ndo -controllerupgrade true`

Retire node1

To retire node1, you resume the automated operation to disable the HA pair with node2 and shut node1 down correctly. You must later remove node1 from the rack or chassis.

Steps

1. Resume the operation:

```
system controller replace resume
```

2. Verify that node1 has been halted:

```
system controller replace show-details
```

After you finish

You can decommission node1 after the upgrade is completed. See Decommission the old system.

Prepare for netboot

After you physically rack node3 and node4 later in the procedure, you might need to netboot them. The term "netboot" means you are booting from an ONTAP image stored on a remote server. When preparing for netboot, you must put a copy of the ONTAP 9 boot image onto a web server that the system can access.

Before you begin

- Verify that you can access a HTTP server with the system.
- Refer to References to link to the *NetApp Support Site* and download the necessary system files for your platform and the correct version of ONTAP.

About this task

You must netboot the new controllers if they do not have the same version of ONTAP 9 installed on them that is installed on the original controllers. After you install each new controller, you boot the system from the ONTAP

9 image stored on the web server. You can then download the correct files to the boot media device for subsequent system boots.

However, you do not need to netboot the controllers if the same version of ONTAP 9 is installed on them that is installed on the original controllers. If so, you can skip this section and proceed to Stage 3 Installing and booting node3

Steps

1. Access the NetApp Support Site to download the files used for performing the netboot of the system.
2. Download the appropriate ONTAP software from the software download section of the NetApp Support Site and store the `<ontap_version>_image.tgz` file on a web-accessible directory.
3. Change to the web-accessible directory and verify that the files you need are available.

For…	Then…

FAS/AFF8000 series systems	Extract the contents of the `<ontap_version>_image.tgz` file to the target directory:
	`tar -zxvf <ontap_version>_image.tgz`
	
	Note: If you are extracting the contents on Windows, use 7-Zip or WinRAR to extract the netboot image.
	
	Your directory listing should contain a netboot folder with a kernel file:
	`netboot/kernel`

All other systems	Your directory listing should contain the following file: `<ontap_version>_image.tgz` **Note**: You do not need to extract the contents of the `<ontap_version>_image.tgz` file.

You will use the information in the directories in Stage 3.

Stage 3. Install and boot node3

Stage 3. Install and boot node3

During Stage 3, you install and boot node3, map the cluster and node-management ports from node1 to node3, and verify the node3 installation. Non-SAN data LIFs and non-root aggregates belonging to node1 are moved from node2 to node3.

Steps

1. Install and boot node3
2. Set the FC or UTA/UTA2 configuration on node3
3. Map ports from node1 to node3
4. Joining the quorum when a node has a different set of network ports
5. Verify the node3 installation
6. Move non-root aggregates and NAS data LIFs owned by node1 from node2 to node3

Install and boot node3

You must install node3 in the rack, transfer node1's connections to node3, boot node3, and install ONTAP. You must then reassign any of node1's spare disks, any disks belonging to the root volume, and any non-root aggregates that were not relocated to node2 earlier in the process, as outlined in this section.

About this task

The relocation operation is paused at the beginning of this stage. This process is largely automated; the operation pauses to enable you to check its status. You must manually resume the operation. In addition, you must verify the SAN LIFs have successfully moved to node3.

You need to netboot node3 if it does not have the same version of ONTAP 9 that is installed on node1. After you install node3, boot it from the ONTAP 9 image stored on the web server. You can then download the correct files to the boot media device for subsequent system boots, by following the instructions in Prepare for netboot.

Important:

- If you are upgrading a V-Series system connected to storage arrays or a system with FlexArray Virtualization software that is connected to storage arrays, you need to complete Step 1 through Step 21, then leave this section and follow instructions in the Configure FC ports on node3 and Check and configure UTA/UTA2 ports on node3 sections as needed, entering commands in Maintenance mode. You must then return to this section and resume with Step 23.
- If you are upgrading a system with storage disks, you need to complete this entire section and then go to the Configure FC ports on node3 and Check and configure UTA/UTA2 ports on node3 sections, entering commands at the cluster prompt.

Steps

1. Make sure that you have rack space for node3.

   If node1 and node2 were in separate chassis, you can put node3 in the same rack location as node1. However, if node1 was in the same chassis with node2, then you need to put node3 into its own rack space, preferably close to the location of node1.

2. Install node3 in the rack, following the *Installation and Setup Instructions* for your node model.

   > If you are upgrading to a system with both nodes in the same chassis, install node4 in the chassis as well as node3. If you do not, when you boot node3, the node will behave as if it were in a dual-chassis configuration, and when you boot node4, the interconnect between the nodes will not come up.

3. Cable node3, moving the connections from node1 to node3.

   Cable the following connections, using the *Installation and Setup Instructions* or the *FlexArray Virtualization Installation Requirements and Reference* for the node3 platform, the appropriate disk shelf document, and *High Availability management*.

   Refer to References to link to the *FlexArray Virtualization Installation Requirements and Reference* and *High Availability management*.

   - Console (remote management port)
   - Cluster ports

- Data ports
- Cluster and node management ports
- Storage
- SAN configurations: iSCSI Ethernet and FC switch ports

> You might not need to move the interconnect card or the cluster interconnect cable connection from node1 to node3 because most platform models have a unique interconnect card model.
> For the MetroCluster configuration, you need to move the FC-VI cable connections from node1 to node3. If the new host does not have an FC-VI card, you might need to move the FC-VI card.

4. Turn on the power to node3, and then interrupt the boot process by pressing Ctrl-C at the console terminal to access the boot environment prompt.

   If you are upgrading to a system with both nodes in the same chassis, node4 also reboots. However, you can disregard the node4 boot until later.

   > When you boot node3, you might see the following warning message:

   ```
   WARNING: The battery is unfit to retain data during a power outage. This
   is likely because the battery is discharged but could be due to other
   temporary conditions.
   When the battery is ready, the boot process will complete and services
   will be engaged.
   To override this delay, press 'c' followed by 'Enter'
   ```

5. If you see the warning message in Step 4, take the following actions:
   a. Check for any console messages that might indicate a problem other than a low NVRAM battery, and, if necessary, take any required corrective action.
   b. Allow the battery to charge and the boot process to complete.

   > **Attention: Do not override the delay; failure to allow the battery to charge could result in a loss of data.**

   > Refer to Prepare for netboot.

6. Configure the netboot connection by choosing one of the following actions.

   > You must use the management port and IP as the netboot connection. Do not use a data LIF IP or a data outage might occur while the upgrade is being performed.

If Dynamic Host Configuration Protocol (DHCP) is…	Then…
Running	Configure the connection automatically by entering the following command at the boot environment prompt: `ifconfig e0M -auto`
Not running	Manually configure the connection by entering the following command at the boot environment prompt: `ifconfig e0M -addr=<filer_addr> -mask=<netmask> -gw=<gateway> dns=<dns_addr> domain=<dns_domain>` `<filer_addr>` is the IP address of the storage system. `<netmask>` is the network mask of the storage system. `<gateway>` is the gateway for the storage system. `<dns_addr>` is the IP address of a name server on your network. `<dns_domain>` is the Domain Name Service (DNS) domain name. If you use this optional parameter, you do not need a fully qualified domain name in the netboot server URL; you need only the server's host name. **Note:** Other parameters might be necessary for your interface. Enter `help ifconfig` at the firmware prompt for details.

7. Perform netboot on node3:

For…	Then…
FAS/AFF8000 series systems	`netboot http://<web_server_ip/path_to_web-accessible_directory>/netboot/kernel`
All other systems	`netboot http://<web_server_ip/path_to_web-accessible_directory>/<ontap_version>_image.tgz`

The `<path_to_the_web-accessible_directory>` should lead to where you downloaded the `<ontap_version>_image.tgz` in the section Prepare for netboot.

Do not interrupt the boot.

8. From the boot menu, select option `(7) Install new software first`.

This menu option downloads and installs the new ONTAP image to the boot device.

Disregard the following message: `This procedure is not supported for Non-Disruptive Upgrade on an HA pair`. The note applies to nondisruptive upgrades of ONTAP, and not upgrades of controllers.
Always use netboot to update the new node to the desired image. If you use another method to install the image on the new controller, the wrong image might install. This issue applies to all ONTAP releases.

9. If you are prompted to continue the procedure, enter `y`, and when prompted for the package, enter the URL:

`http://<web_server_ip/path_to_web-`

```
accessible_directory>/<ontap_version>_image.tgz
```

10. Complete the following substeps to reboot the controller module:

    a. Enter `n` to skip the backup recovery when you see the following prompt:

    ```
    Do you want to restore the backup configuration now? {y|n}
    ```

    b. Enter `y` to reboot when you see the following prompt:

    ```
    The node must be rebooted to start using the newly installed software. Do
    you want to reboot now? {y|n}
    ```

    The controller module reboots but stops at the boot menu because the boot device was reformatted, and the configuration data must be restored.

11. Select maintenance mode `5` from the boot menu and enter `y` when you are prompted to continue with the boot.

12. Verify that the controller and chassis are configured as ha:

    ```
    ha-config show
    ```

    The following example shows the output of the `ha-config show` command:

    ```
    Chassis HA configuration: ha
    Controller HA configuration: ha
    ```

    System records in a PROM whether they are in an HA pair or stand-alone configuration. The state must be the same on all components within the stand-alone system or HA pair.

13. If the controller and chassis are not configured as ha, use the following commands to correct the configuration:

    ```
    ha-config modify controller ha

    ha-config modify chassis ha
    ```

    If you have a MetroCluster configuration, use the following commands to modify the controller and chassis:

    ```
    ha-config modify controller mcc

    ha-config modify chassis mcc
    ```

14. Exit maintenance mode:

    ```
    halt
    ```

    Interrupt the autoboot by pressing `Ctrl-C` at the boot environment prompt.

15. On node2, check the system date, time, and time zone:

```
date
```

16. On node3, check the date by using the following command at the boot environment prompt:

```
show date
```

17. If necessary, set the date on node3:

```
set date <mm/dd/yyyy>
```

18. On node3, check the time by using the following command at the boot environment prompt:

```
show time
```

19. If necessary, set the time on node3:

```
set time <hh:mm:ss>
```

20. If necessary, set the partner system ID on node3:

```
setenv partner-sysid <node2_sysid>
```

    a. Save the settings:

```
saveenv
```

21. On the new node, in boot loader, the `partner-sysid` parameter must be set. For node3, `partner-sysid` must be that of node2. Verify the `partner-sysid` for node3:

```
printenv partner-sysid
```

22. Take one of the following actions:

If your system…	Description
Has disks and no back-end storage	Go to Step 23
Is a V-Series system or a system with FlexArray Virtualization software connected to storage arrays	a. Go to section Setting the FC or UTA/UTA2 configuration on node3 and complete the subsections in this section. b. Return to this section and complete the remaining steps, beginning with Step 23. **Important**: You must reconfigure FC onboard ports, CNA onboard ports, and CNA cards before you boot ONTAP on the V-Series or system with FlexArray Virtualization software.

23. Add the FC initiator ports of the new node to the switch zones.

If your system has a tape SAN, then you need zoning for the initiators. If required, modify the onboard ports to initiator by referring to the Configuring FC ports on node3. See your storage array and zoning documentation for further instructions on zoning.

24. Add the FC initiator ports to the storage array as new hosts, mapping the array LUNs to the new hosts.

    See your storage array and zoning documentation for instructions.

25. Modify the worldwide port name (WWPN) values in the host or volume groups associated with array LUNs on the storage array.

    Installing a new controller module changes the WWPN values associated with each onboard FC port.

26. If your configuration uses switch-based zoning, adjust the zoning to reflect the new WWPN values.

27. If NetApp Storage Encryption (NSE) is in use on this configuration, the `setenv bootarg.storageencryption.support` command must be set to `true`, and the `kmip.init.maxwait` variable must be set to `off` to avoid a boot loop after the node1 configuration is loaded:

    ```
    setenv bootarg.storageencryption.support true

    setenv kmip.init.maxwait off
    ```

28. Boot node into boot menu:

    ```
    boot_ontap menu
    ```

    If you do not have FC or UTA/UTA2 configuration, execute Check and configure UTA/UTA2 ports on node3, Step 15 so that node3 can recognize node1's disks.

29. For a MetroCluster configuration, V-Series systems and systems with FlexArray Virtualization software connected to storage arrays,
    go to Check and configure UTA/UTA2 ports on node3, Step 15.

Set the FC or UTA/UTA2 configuration on node3

If node3 has onboard FC ports, onboard unified target adapter (UTA/UTA2) ports, or a UTA/UTA2 card, you must configure the settings before completing the rest of the procedure.

About this task

You might need to complete the section Configure FC ports on node3, the section Check and configure UTA/UTA2 ports on node3, or both sections.

> NetApp marketing materials might use the term UTA2 to refer to converged network adapter (CNA) adapters and ports. However, the CLI uses the term CNA.

- If node3 does not have onboard FC ports, onboard UTA/UTA2 ports, or a UTA/UTA2 card, and you are upgrading a system with storage disks, you can skip to the Map ports from node1 to node3 section.
- However, if you have a V-Series system or a system with FlexArray Virtualization software with storage arrays, and node3 does not have onboard FC ports, onboard UTA/UTA ports, or a UTA/UTA2 card, return to the section *Install and boot node3* and resume at Step 23.

Choices

- Configure FC ports on node3

- Check and configure UTA/UTA2 ports on node3

Configure FC ports on node3

If node3 has FC ports, either onboard or on an FC adapter, you must set port configurations on the node before you bring it into service because the ports are not preconfigured. If the ports are not configured, you might experience a disruption in service.

Before you begin

You must have the values of the FC port settings from node1 that you saved in the section Prepare the nodes for upgrade.

About this task

You can skip this section if your system does not have FC configurations. If your system has onboard UTA/UTA2 ports or a UTA/UTA2 card, you configure them in Check and configure UTA/UTA2 ports on node3.

Important: If your system has storage disks, enter the commands in this section at the cluster prompt. If you have a 'V-Series system' or have FlexArray Virtualization Software and are connected to storage arrays, enter commands in this section in Maintenance mode.

1. Compare the FC settings on node3 with the settings that you captured earlier from node1.
2. Take one of the following actions:

If the system that you are upgrading…	Then…

Has storage disks	In maintenance mode (option 5 at boot menu), modify the FC ports on node3 as needed:
	• To program target ports:
	`ucadmin modify -m fc -t target <adapter>`
	• To program initiator ports:
	`ucadmin modify -m fc -t initiator <adapter>`
	`-t` is the FC4 type: target or initiator.

Is a V-Series system or has FlexArray Virtualization Software and is connected to storage arrays	In maintenance mode (option 5 at boot menu), modify the FC ports on node3 as needed: `ucadmin modify -m fc -t initiator -f <adapter_port_name>` `-t` is the FC4 type, target or initiator. **Note**: The FC ports must be programmed as initiators.

3. Take one of the following actions:

If the system that you are upgrading…	Then…
Has storage disks	Verify the new settings by using the following command and examining the output: `ucadmin show`
Is a V-Series system or has FlexArray Virtualization Software and is connected to storage arrays	Verify the new settings by using the following command and examining the output: `ucadmin show`

4. Exit Maintenance mode:

```
halt
```

5. Boot the system from loader prompt:

```
boot_ontap menu
```

6. After you enter the command, wait until the system stops at the boot environment prompt.
7. Select option `5` from the boot menu for maintenance mode.
8. Take one of the following actions:

If the system that you are upgrading…	Then…
Has storage disks	• If node3 has a UTA/UTA2 card or UTA/UTA2 onboard ports, go to the section Check and configure UTA/UTA2 ports on node3. • If node3 does not have a UTA/UTA2 card or UTA/UTA2 onboard ports, skip the section Check and configure UTA/UTA2 ports on node3. and go to the section Map ports from node1 to node3.
Is a V-Series system or has FlexArray Virtualization Software and is connected to storage arrays	• If node3 has a UTA/UTA2 card or UTA/UTA2 onboard ports, go to the section Check and configure UTA/UTA2 ports on node3. • If node3 does not have a UTA/UTA2 card or UTA/UTA2 onboard ports, skip the section Check and configure UTA/UTA2 ports on node3 and return to the section *Install and boot node3* at resume at Step 23.

Check and configure UTA/UTA2 ports on node3

If node3 has onboard UTA/UTA2 ports or a UTA/UTA2 card, you must check the configuration of the ports and possibly reconfigure them, depending on how you want to use the upgraded system.

Before you begin

You must have the correct SFP+ modules for the UTA/UTA2 ports.

About this task

If you want to use a Unified Target Adapter (UTA/UTA2) port for FC, you must first verify how the port is configured.

NetApp marketing materials might use the term UTA2 to refer to CNA adapters and ports. However, the CLI uses the term CNA.

You can use the `ucadmin show` command to verify the current port configuration:

```
*> ucadmin show
         Current  Current    Pending   Pending      Admin
Adapter  Mode     Type       Mode      Type         Status
-------  -------  -------    --------  ----------   --------
0e       fc       target     -         initiator    offline
0f       fc       target     -         initiator    offline
0g       fc       target     -         initiator    offline
0h       fc       target     -         initiator    offline
1a       fc       target     -         -            online
1b       fc       target     -         -            online
6 entries were displayed.
```

UTA/UTA2 ports can be configured into native FC mode or UTA/UTA2 mode. FC mode supports FC initiator and FC target; UTA/UTA2 mode allows concurrent NIC and FCoE traffic sharing the same 10GbE SFP+ interface and supports FC targets.

UTA/UTA2 ports might be found on an adapter or on the controller, and have the following configurations, but you should check the configuration of the UTA/UTA2 ports on the node3 and change it, if necessary:

- UTA/UTA2 cards ordered when the controller is ordered are configured before shipment to have the personality you request.
- UTA/UTA2 cards ordered separately from the controller are shipped with the default FC target personality.
- Onboard UTA/UTA2 ports on new controllers are configured before shipment to have the personality you request.

Attention: If your system has storage disks, you enter the commands in this section at the cluster prompt unless directed to enter Maintenance mode. If you have a V- Series system or have FlexArray Virtualization Software and are connected to storage arrays, you enter commands in this section at the Maintenance mode prompt. You must be in Maintenance mode to configure UTA/UTA2 ports.

Steps

1. Check how the ports are currently configured by entering the following command on node3:

If the system…	Then…
Has storage disks	No action required.

If the system…	Then…
Is a V-Series system or has FlexArray Virtualization Software and is connected to storage arrays	`ucadmin show`

The system displays output similar to the following example:

```
*> ucadmin show
          Current  Current     Pending   Pending    Admin
Adapter   Mode     Type        Mode      Type       Status
-------   -------  ---------   -------   --------   ---------
0e        fc       initiator   -         -          online
0f        fc       initiator   -         -          online
0g        cna      target      -         -          online
0h        cna      target      -         -          online
0e        fc       initiator   -         -          online
0f        fc       initiator   -         -          online
0g        cna      target      -         -          online
0h        cna      target      -         -          online
*>
```

2. If the current SFP+ module does not match the desired use, replace it with the correct SFP+ module.

   Contact your NetApp representative to obtain the correct SFP+ module.

3. Examine the output of the `ucadmin show` command and determine whether the UTA/UTA2 ports have the personality you want.
4. Take one of the following actions:

If the UTA/UTA2 ports…	Then…
Do not have the personality that you want	Go to Step 5.
Have the personality that you want	Skip Step 5 through Step 12 and go to Step 13.

5. Take one of the following actions:

If you are configuring…	Then…
Ports on a UTA/UTA2 card	Go to Step 7
Onboard UTA/UTA2 ports	Skip Step 7 and go to Step 8.

6. If the adapter is in initiator mode, and if the UTA/UTA2 port is online, take the UTA/UTA2 port offline:

   `storage disable adapter <adapter_name>`

Adapters in target mode are automatically offline in Maintenance mode.

7. If the current configuration does not match the desired use, change the configuration as needed:

   `ucadmin modify -m fc|cna -t initiator|target <adapter_name>`

   - `-m` is the personality mode, `fc` or `cna`.
   - `-t` is the FC4 type, `target` or `initiator`.

   > You must use FC initiator for tape drives, FlexArray Virtualization systems, and MetroCluster configurations. You must use the FC target for SAN clients.

8. Verify the settings:

   `ucadmin show`

9. Verify the settings:

If the system…	Then…
Has storage disks	`ucadmin show`
Is a V-Series system or has FlexArray Virtualization Software and is connected to storage arrays	`ucadmin show`

   The output in the following examples shows that the FC4 type of adapter "1b" is changing to `initiator` and that the mode of adapters "2a" and "2b" is changing to `cna`:

```
*> ucadmin show
         Current    Current     Pending  Pending     Admin
Adapter  Mode       Type        Mode     Type        Status
-------  --------   ----------  -------  --------    --------
1a       fc         initiator   -        -           online
1b       fc         target      -        initiator   online
2a       fc         target      cna      -           online
2b       fc         target      cna      -           online
*>
```

10. Place any target ports online by entering one of the following commands, once for each port:

If the system…	Then…
Has storage disks	`network fcp adapter modify -node <node_name> -adapter <adapter_name> -state up`

If the system…	Then…
Is a V-Series system or has FlexArray Virtualization Software and is connected to storage arrays	`fcp config <adapter_name> up`

11. Cable the port.

12. Take one of the following actions:

If the system…	Then…
Has storage disks	Go to Map ports from node1 to node3
Is a V-series system or has FlexArray Virtualization Software and is connected to storage arrays	Return to *Install and boot node3* and resume the section at Step 23.

13. Exit maintenance mode:

```
halt
```

14. Boot node into boot menu by running `boot_ontap menu`. If you are upgrading to an A800, go to Step 23.

15. On node3, go to the boot menu and using 22/7 and select the hidden option `boot_after_controller_replacement`. At the prompt, enter node1 to reassign the disks of node1 to node3, as per the following example.

```
LOADER-A> boot_ontap menu
...
******************************
*                            *
* Press Ctrl-C for Boot Menu. *
*                            *
******************************
.
.
Please choose one of the following:
(1) Normal Boot.
(2) Boot without /etc/rc.
(3) Change password.
(4) Clean configuration and initialize all disks.
(5) Maintenance mode boot.
(6) Update flash from backup config.
(7) Install new software first.
(8) Reboot node.
(9) Configure Advanced Drive Partitioning.
Selection (1-9)? 22/7
```

```
.
.
(boot_after_controller_replacement)   Boot after controller upgrade
(9a)                                  Unpartition all disks and remove
their ownership information.
(9b)                                  Clean configuration and initialize
node with partitioned disks.
(9c)                                  Clean configuration and initialize
node with whole disks.
(9d)                                  Reboot the node.
(9e)                                  Return to main boot menu.

Please choose one of the following:

(1) Normal Boot.
(2) Boot without /etc/rc.
(3) Change password.
(4) Clean configuration and initialize all disks.
(5) Maintenance mode boot.
(6) Update flash from backup config.
(7) Install new software first.
(8) Reboot node.
(9) Configure Advanced Drive Partitioning.
Selection (1-9)? boot_after_controller_replacement
.
This will replace all flash-based configuration with the last backup to
disks. Are you sure you want to continue?: yes
.
.
Controller Replacement: Provide name of the node you would like to
replace: <name of the node being replaced>
.
.
Changing sysid of node <node being replaced> disks.
Fetched sanown old_owner_sysid = 536953334 and calculated old sys id =
536953334
Partner sysid = 4294967295, owner sysid = 536953334
.
.
.
Terminated
<node reboots>
.
.
System rebooting...
.
```

```
Restoring env file from boot media...
copy_env_file:scenario = head upgrade
Successfully restored env file from boot media...
.
.
System rebooting...
.
.
.
WARNING: System ID mismatch. This usually occurs when replacing a boot
device or NVRAM cards!
Override system ID? {y|n} y
Login:
...
```

16. If the system goes into a reboot loop with the message `no disks found`, this is because it has reset the ports back to the target mode and therefore is unable to see any disks. Continue with Step 17 to Step 22 to resolve this.
17. Press `Ctrl-C` during autoboot to stop the node at the `LOADER>` prompt.
18. At the loader prompt, enter maintenance mode:

    ```
    boot_ontap maint
    ```

19. In maintenance mode, display all the previously set initiator ports that are now in target mode:

    ```
    ucadmin show
    ```

    Change the ports back to initiator mode:

    ```
    ucadmin modify -m fc -t initiator -f <adapter name>
    ```

20. Verify that the ports have been changed to initiator mode:

    ```
    ucadmin show
    ```

21. Exit maintenance mode:

    ```
    halt
    ```

22. At the loader prompt boot up:

    ```
    boot_ontap
    ```

    Now, on booting, the node can detect all the disks that were previously assigned to it and can boot up as expected.

23. If you are upgrading from a system with external disks to a system that supports internal and external disks (AFF A800 systems, for example), set the node1 aggregate as the root aggregate to confirm that node3 boots from the root aggregate of node1. To set the root aggregate, go to the boot menu and select option `5` to enter maintenance mode.

You must perform the following substeps in the exact order shown; failure to do so might cause an outage or even data loss.

The following procedure sets node3 to boot from the root aggregate of node1:

a. Enter maintenance mode:

```
boot_ontap maint
```

b. Check the RAID, plex, and checksum information for the node1 aggregate:

```
aggr status -r
```

c. Check the status of the node1 aggregate:

```
aggr status
```

d. If necessary, bring the node1 aggregate online:

```
aggr_online root_aggr_from_<node1>
```

e. Prevent the node3 from booting from its original root aggregate:

```
aggr offline <root_aggr_on_node3>
```

f. Set the node1 root aggregate as the new root aggregate for node3:

```
aggr options aggr_from_<node1> root
```

g. Verify that the root aggregate of node3 is offline and the root aggregate for the disks brought over from node1 is online and set to root:

```
aggr status
```

Failing to perform the previous substep might cause node3 to boot from the internal root aggregate, or it might cause the system to assume a new cluster configuration exists or prompt you to identify one.

The following shows an example of the command output:

```
-------------------------------------------------------------------
Aggr                  State    Status             Options

aggr0_nst_fas8080_15 online   raid_dp, aggr      root, nosnap=on
                              fast zeroed
                              64-bit

aggr0                 offline  raid_dp, aggr      diskroot
                              fast zeroed
                              64-bit
-------------------------------------------------------------------
```

Map ports from node1 to node3

You must verify that the physical ports on node1 map correctly to the physical ports on node3, which will enable node3 to communicate with other nodes in the cluster and with the network after the upgrade.

About this task

Refer to References to link to the *Hardware Universe* to capture information about the ports on the new nodes. You will use the information later in this section.

Port settings might vary, depending on the model of the nodes. You must make the port and LIF configuration on the original node compatible with the planned use and configuration of the new node. This is because the new node replays the same configuration when it boots, which means that when you boot node3, ONTAP will try to host LIFs on the same ports that were used on node1.

Therefore, if the physical ports on node1 do not map directly to the physical ports on node3, then software configuration changes will be required to restore cluster, management, and network connectivity after the boot. In addition, if the cluster ports on node1 do not directly map to the cluster ports on node3, node3 might not automatically rejoin quorum when it is rebooted until you change the software configuration to host the cluster LIFs on the correct physical ports.

Steps

1. Record all the node1 cabling information for node1, the ports, broadcast domains, and IPspaces, in the table:

LIF	Node1 ports	Node1 IPspaces	Node1 broadcast domains	Node3 ports	Node3 IPspaces	Node3 broadcast domains
Cluster 1						
Cluster 2						
Cluster 3						
Cluster 4						
Node management						

LIF	Node1 ports	Node1 IPspaces	Node1 broadcast domains	Node3 ports	Node3 IPspaces	Node3 broadcast domains
Cluster management						
Data 1						
Data 2						
Data 3						
Data 4						
SAN						
Intercluster port						

2. Record all the cabling information for node3, the ports, broadcast domains, and IPspaces in the table.
3. Follow these steps to verify if the setup is a two-node switchless cluster:
   a. Set the privilege level to advanced:

      ```
      cluster::> set -privilege advanced
      ```

   b. Verify if the setup is a two-node switchless cluster:

      ```
      cluster::> network options switchless-cluster show
      ```

      ```
      cluster::*> network options switchless-cluster show

      Enable Switchless Cluster: false/true
      ```

      The value of this command output must match the physical state of the system.

   c. Return to the administration privilege level:

      ```
      cluster::*> set -privilege admin

      cluster::>
      ```

4. Follow these steps to place node3 into quorum:
   a. Boot node3. See Install and boot node3 to boot the node if you have not already done so.
   b. Verify that the new cluster ports are in the Cluster broadcast domain:

      ```
      network port show -node <node> -port <port> -fields broadcast-domain
      ```

      The following example shows that port "e0a" is in the Cluster domain on node3:

```
 cluster::> network port show -node <node3> -port e0a -fields
broadcast-domain

 node       port broadcast-domain
 ---------- ---- ----------------
 node3      e0a  Cluster
```

c. If the cluster ports are not in the Cluster broadcast-domain, add them with the following command:

```
broadcast-domain add-ports -ipspace Cluster -broadcast-domain Cluster -ports
<node:port>
```

This example adds Cluster port "e1b" on node3:

```
network port modify -node node3 -port e1b -ipspace Cluster -mtu 9000
```

d. Add the correct ports to the Cluster broadcast domain:

```
network port modify -node -port -ipspace Cluster -mtu 9000
```

This example adds Cluster port "e1b" on node4:

```
network port modify -node node4 -port e1b -ipspace Cluster -mtu 9000
```

e. Migrate the cluster LIFs to the new ports, once for each LIF:

```
network interface migrate -vserver Cluster -lif <lif_name> -source-node
<node3> -destination-node <node3> -destination-port <port_name>
```

f. Modify the home port of the cluster LIFs:

```
network interface modify -vserver Cluster -lif <lif_name> -home-port
<port_name>
```

g. Remove the old ports from the Cluster broadcast domain:

```
network port broadcast-domain remove-ports
```

The following command removes port "e0d" on node3:

```
network port broadcast-domain remove-ports -ipspace Cluster -broadcast
-domain Cluster -ports node3:e0d
```

h. Verify that node3 has rejoined quorum:

```
cluster show -node node3 -fields health
```

5. Adjust the broadcast domains hosting your cluster LIFs and node-management/clustermanagement LIFs.

Confirm that each broadcast domain contains the correct ports. A port cannot be moved between broadcast domains if it is hosting or is home to a LIF, so you might need to migrate and modify the LIFs as follows:

a. Display the home port of a LIF:

```
network interface show -fields home-node,home-port
```

b. Display the broadcast domain containing this port:

```
network port broadcast-domain show -ports <node_name:port_name>
```

c. Add or remove ports from broadcast domains:

```
network port broadcast-domain add-ports
```

```
network port broadcast-domain remove-ports
```

d. Modify a LIF's home port:

```
network interface modify -vserver vserver -lif <lif_name> -home-port
<port_name>
```

6. Adjust the broadcast domain membership of network ports used for intercluster LIFs using the same commands shown in Step 5.
7. Adjust any other broadcast domains and migrate the data LIFs, if necessary, using the same commands shown in Step 5.
8. If there were any ports on node1 that no longer exist on node3, follow these steps to delete them:

a. Access the advanced privilege level on either node:

```
set -privilege advanced
```

b. To delete the ports:

```
network port delete -node <node_name> -port <port_name>
```

c. Return to the admin level:

```
set -privilege admin
```

9. Adjust all the LIF failover groups:

```
network interface modify -failover-group <failover_group> -failover-policy
<failover_policy>
```

The following command sets the failover policy to `broadcast-domain-wide` and uses the ports in failover group "fg1" as failover targets for LIF "data1" on node3:

```
network interface modify -vserver node3 -lif data1 failover-policy broadcast-
domainwide -failover-group fg1
```

Refer to References to link to *Network Management* or the *ONTAP 9 Commands: Manual Page Reference* for more information.

10. Verify the changes on node3:

    ```
    network port show -node node3
    ```

11. Each cluster LIF must be listening on port 7700. Verify that the cluster LIFs are listening on port 7700:

    ```
    ::> network connections listening show -vserver Cluster
    ```

    Port 7700 listening on cluster ports is the expected outcome as shown in the following example for a two-node cluster:

    ```
    Cluster::> network connections listening show -vserver Cluster
    Vserver Name     Interface Name:Local Port     Protocol/Service
    ---------------- ----------------------------  -------------------
    Node: NodeA
    Cluster          NodeA_clus1:7700               TCP/ctlopcp
    Cluster          NodeA_clus2:7700               TCP/ctlopcp
    Node: NodeB
    Cluster          NodeB_clus1:7700               TCP/ctlopcp
    Cluster          NodeB_clus2:7700               TCP/ctlopcp
    4 entries were displayed.
    ```

12. If necessary, for each cluster LIF that is not listening on port 7700, set the administrative status of the LIF to `down` and then `up`:

    ```
    ::> net int modify -vserver Cluster -lif <cluster-lif> -status-admin down; net
    int modify -vserver Cluster -lif <cluster-lif> -status-admin up
    ```

    Repeat Step 11 to verify that the cluster LIF is now listening on port 7700.

Join the quorum when a node has a different set of network ports

The node with the new controller boots and attempts to join the cluster automatically at first; however, if the new node has a different set of network ports, you must perform the following steps to confirm that the node successfully joins the quorum.

About this task

You can use these instructions for any relevant node. Node3 is used throughout the following sample.

Steps

1. Verify that the new cluster ports are in the Cluster broadcast domain by entering the following command and checking its output:

    ```
    network port show -node node -port port -fields broadcast-domain
    ```

    The following example shows that port "e1a" is in the Cluster domain on node3:

```
cluster::> network port show -node node3 -port e1a -fields broadcast-
domain
node   port broadcast-domain
------ ---- ----------------
node3  e1a  Cluster
```

2. Add the correct ports to the Cluster broadcast domain by entering the following command and checking its output:

   `network port modify -node -port -ipspace Cluster -mtu 9000`

   This example adds Cluster port "e1b" on node3:

   ```
   network port modify -node node3 -port e1b -ipspace Cluster -mtu 9000
   ```

3. Migrate the cluster LIFs to the new ports, once for each LIF, using the following command:

   `network interface migrate -vserver Cluster -lif <lif_name> -source-node node3 - destination-node node3 -destination-port <port_name>`

4. Modify the home port of the cluster LIFs:

   `network interface modify -vserver Cluster -lif <lif_name> –home-port <port_name>`

5. If the cluster ports are not in the Cluster broadcast-domain, add them by using the following command:

   `network port broadcast-domain add-ports -ipspace Cluster –broadcastdomain Cluster - ports node:port`

6. Remove the old ports from the Cluster broadcast domain. You can use for any relevant node. The following command removes port "e0d" on node3:

   `network port broadcast-domain remove-ports network port broadcast-domain remove-ports ipspace Cluster -broadcast-domain Cluster -ports node3:e0d`

7. Verify the node has rejoined quorum:

   `cluster show -node node3 -fields health`

8. Adjust the broadcast domains hosting your cluster LIFs and node-management/cluster management LIFs. Confirm that each broadcast domain contains the correct ports. A port cannot be moved between broadcast domains if it is hosting or is home to a LIF, so you might need to migrate and modify the LIFs as follows:

   a. Display the home port of a LIF:

      `network interface show -fields home-node,home-port`

   b. Display the broadcast domain containing this port:

```
network port broadcast-domain show -ports <node_name:port_name>
```

c. Add or remove ports from broadcast domains:
`network port broadcast-domain add-ports network port broadcast-domain remove-port`

d. Modify a home port of a LIF:
`network interface modify -vserver vserver -lif <lif_name> -home-port <port_name>` Adjust the intercluster broadcast domains and migrate the intercluster LIFs, if necessary. The data LIFs remain unchanged.

Verify the node3 installation

After you install and boot node3, you must verify that it is installed correctly. You must wait for node3 to join quorum and then resume the relocation operation.

About this task

At this point in the procedure, the operation will have paused as node3 joins quorum.

Steps

1. Verify that node3 has joined quorum:

   ```
   cluster show -node node3 -fields health
   ```

2. Verify that node3 is part of the same cluster as node2 and that it is healthy:

   ```
   cluster show
   ```

3. Check the status of the operation and verify that the configuration information for node3 is the same as node1:

   ```
   system controller replace show-details
   ```

   If the configuration is different for node3, a system disruption might occur later in the procedure.

4. Check that the replaced controller is configured correctly for the MetroCluster configuration, the MetroCluster configuration should be in healthy state and not in switch over mode. Refer to Verify the health of the MetroCluster configuration.

Re-create VLANs, interface groups, and broadcast domains on node3

After you confirm that node3 is in quorum and can communicate with node2, you must re-create node1's VLANs, interface groups, and broadcast domains on node3. You must also add the node3 ports to the newly re-created broadcast domains.

About this task

For more information on creating and re-creating VLANs, interface groups, and broadcast domains, go to References and link to *Network Management*.

Steps

1. Re-create the VLANs on node3 using the node1 information recorded in the Relocate non-root aggregates and NAS data LIFs owned by node1 to node2 section:

```
network port vlan create -node <node_name> -vlan <vlan-names>
```

2. Re-create the interface groups on node3 using the node1 information recorded in the Relocate non-root aggregates and NAS data LIFs owned by node1 to node2 section:

```
network port ifgrp create -node <node_name> -ifgrp <port_ifgrp_names>-distr-
func
```

3. Re-create the broadcast domains on node3 using the node1 information recorded in the Relocate non-root aggregates and NAS data LIFs owned by node1 to node2 section:

```
network port broadcast-domain create -ipspace Default -broadcast-domain
<broadcast_domain_names> -mtu <mtu_size> -ports
<node_name:port_name,node_name:port_name>
```

4. Add the node3 ports to the newly re-created broadcast domains:

```
network port broadcast-domain add-ports -broadcast-domain
<broadcast_domain_names> -ports <node_name:port_name,node_name:port_name>
```

Restore key-manager configuration on node3

If you are using NetApp Volume Encryption (NVE) to encrypt volumes on the system you are upgrading, the encryption configuration must be synchronized to the new nodes. Encrypted volumes are taken offline when ARL is complete for node1 aggregates from node2 to node3.

Steps

1. To synchronize encryption configuration for Onboard Key Manager, run the following command at the cluster prompt:

For this ONTAP version…	Use this command…
ONTAP 9.6 or 9.7	security key-manager onboard sync
ONTAP 9.5	security key-manager setup -node <node_name>

2. Enter the cluster-wide passphrase for the Onboard Key Manager.

Move non-root aggregates and NAS data LIFs owned by node1 from node2 to node3

After you verify the node3 installation and before you relocate aggregates from node2 to node3, you must move the NAS data LIFs belonging to node1 that are currently on node2 from node2 to node3. You also must verify that the SAN LIFs exist on node3.

About this task

Remote LIFs handle traffic to SAN LUNs during the upgrade procedure. Moving SAN LIFs is not necessary for cluster or service health during the upgrade. SAN LIFs are not moved unless they need to be mapped to new ports. You will verify that the LIFs are healthy and located on appropriate ports after you bring node3 online.

Steps

1. Resume the relocation operation:

```
system controller replace resume
```

The system performs the following tasks:

- Cluster quorum check
- System ID check
- Image version check
- Target platform check
- Network reachability check

The operation pauses at this stage in the network reachability check.

2. Manually verify that the network and all VLANs, interface groups, and broadcast domains have been configured correctly.
3. Resume the relocation operation:

   ```
   system controller replace resume
   ```

   ```
   To complete the "Network Reachability" phase, ONTAP network
   configuration must
   be manually adjusted to match the new physical network configuration of
   the
   hardware. This includes assigning network ports to the correct broadcast
   domains, creating any required ifgrps and VLANs, and modifying the home-
   port
   parameter of network interfaces to the appropriate ports. Refer to the
   "Using
   aggregate relocation to upgrade controller hardware on a pair of nodes
   running
   ONTAP 9.x" documentation, Stages 3 and 5. Have all of these steps been
   manually
   completed? [y/n]
   ```

4. Enter `y` to continue.
5. The system performs the following checks:

   - Cluster health check
   - Cluster LIF status check

   After performing these checks, the system relocates the non-root aggregates and NAS data LIFs owned by node1 to the new controller, node3.
   The system pauses once the resource relocation is complete.

6. Check the status of the aggregate relocation and NAS data LIF move operations:

   ```
   system controller replace show-details
   ```

7. Verify that the non-root aggregates and NAS data LIFs have been successfully relocated to node3.

   If any aggregates fail to relocate or are vetoed, you must manually relocate the aggregates, or override

either the vetoes or destination checks, if necessary. See Relocate failed or vetoed aggregates for more information.

8. Verify that the SAN LIFs are on the correct ports on node3 by completing the following substeps:
   a. Enter the following command and examine its output:

      ```
      network interface show -data-protocol <iscsi|fcp> -home-node <node3>
      ```

      The system returns output similar to the following example:

      ```
      cluster::> net int show -data-protocol iscsi|fcp -home-node node3

              Logical   Status     Network           Current  Current Is
      Vserver Interface Admin/Oper Address/Mask      Node     Port    Home
      ------- --------- ---------- ----------------- -------- ------- ----
      vs0
              a0a       up/down     10.63.0.53/24     node3   a0a     true
              data1     up/up       10.63.0.50/18     node3   e0c     true
              rads1     up/up       10.63.0.51/18     node3   e1a     true
              rads2     up/down     10.63.0.52/24     node3   e1b     true
      vs1
              lif1      up/up       172.17.176.120/24 node3   e0c     true
              lif2      up/up       172.17.176.121/24 node3   e1a     true
      ```

   b. If node3 has any SAN LIFs or groups of SAN LIFs that are on a port that did not exist on node1 or that need to be mapped to a different port, move them to an appropriate port on node3 by completing the following substeps:
      i. Set the LIF status to down:

         ```
         network interface modify -vserver <Vserver_name> -lif <LIF_name> -status
         -admin down
         ```

      ii. Remove the LIF from the port set:

         ```
         portset remove -vserver <Vserver_name> -portset <portset_name> -port-name
         <port_name>
         ```

      iii. Enter one of the following commands:
         - Move a single LIF:

           ```
           network interface modify -vserver <Vserver_name> -lif <LIF_name> -home
           -port <new_home_port>
           ```

         - Move all the LIFs on a single nonexistent or incorrect port to a new port:

           ```
           network interface modify {-home-port <port_on_node1> -home-node
           <node1> -role data} -home-port <new_home_port_on_node3>
           ```

         - Add the LIFs back to the port set:

```
portset add -vserver <Vserver_name> -portset <portset_name> -port-name
<port_name>
```

> You must confirm that you moved SAN LIFs to a port that has the same link speed as the original port.

c. Modify the status of all LIFs to "up" so the LIFs can accept and send traffic on the node:

```
network interface modify -home-port <port_name> -home-node <node3> -lif data
-status admin up
```

d. Enter the following command on either node and examine its output to verify that LIFs have been moved to the correct ports and that the LIFs have the status of `up`:

```
network interface show -home-node <node3> -role data
```

e. If any LIFs are down, set the administrative status of the LIFs to `up` by entering the following command, once for each LIF:

```
network interface modify -vserver <vserver_name> -lif <lif_name> -status
-admin up
```

9. Resume the operation to prompt the system to perform the required post-checks:

```
system controller replace resume
```

The system performs the following post-checks:

- Cluster quorum check
- Cluster health check
- Aggregates reconstruction check
- Aggregate status check
- Disk status check
- Cluster LIF status check

Stage 4. Relocate and retire node

Stage 4. Relocate and retire node2

During Stage 4, all non-root aggregates are relocated from node2 to node3; the non-SAN data LIFs owned by node2 are moved to node3. You must record the necessary node2 information and then retire node2.

Steps

1. Relocate non-root aggregates and NAS data LIFs from node2 to node3
2. Retire node2

Relocate non-root aggregates and NAS data LIFs from node2 to node3

Before you can replace node2 with node4, you must relocate the non-root aggregates that are owned by node2 to node3.

Before you begin

After the post-checks from the previous stage complete, the resource release for node2 starts automatically. The non-root aggregates and non-SAN data LIFs are migrated from node2 to node3.

About this task

Remote LIFs handle traffic to SAN LUNs during the upgrade procedure. Moving SAN LIFs is not necessary for cluster or service health during the upgrade.

After the aggregates and LIFs are migrated, the operation is paused for verification purposes. At this stage, you must verify whether or not all the non-root aggregates and non-SAN data LIFs are migrated to node3.

> The home owner for the aggregates and LIFs are not modified; only the current owner is modified.

Steps

1. Verify that all the non-root aggregates are online and their state on node3:

   ```
   storage aggregate show -node <node3> -state online -root false
   ```

   The following example shows that the non-root aggregates on node2 are online:

   ```
   cluster::> storage aggregate show -node node3 state online -root false

   Aggregate      Size         Available   Used%   State   #Vols  Nodes
   RAID     Status
   ----------     ---------    ---------   ------  -----   -----  ------
   -------  ------
   aggr_1         744.9GB      744.8GB      0%     online  5      node2
   raid_dp  normal
   aggr_2         825.0GB      825.0GB      0%     online  1      node2
   raid_dp  normal
   2 entries were displayed.
   ```

   If the aggregates have gone offline or become foreign on node3, bring them online by using the following command on node3, once for each aggregate:

   ```
   storage aggregate online -aggregate <aggr_name>
   ```

2. Verify that all the volumes are online on node3 by using the following command on node3 and examining the output:

   ```
   volume show -node <node3> -state offline
   ```

   If any volumes are offline on node3, bring them online by using the following command on node3, once for each volume:

```
volume online -vserver <vserver_name> -volume <volume_name>
```

The `<vserver_name>` to use with this command is found in the output of the previous `volume show` command.

3. Verify that the LIFs have been moved to the correct ports and have a status of `up`. If any LIFs are down, set the administrative status of the LIFs to `up` by entering the following command, once for each LIF:

```
network interface modify -vserver <vserver_name> - lif <LIF_name> -home-node
<node_name> - status-admin up
```

4. If the ports currently hosting data LIFs will not exist on the new hardware, remove them from the broadcast domain:

```
network port broadcast-domain remove-ports
```

5. Verify that there are no data LIFs remaining on node2 by entering the following command and examining the output:

```
network interface show -curr-node <node2> -role data
```

6. If you have interface groups or VLANs configured, complete the following substeps:
   a. Record VLAN and interface group information so you can re-create the VLANs and interface groups on node3 after node3 is booted up.
   b. Remove the VLANs from the interface groups:

```
network port vlan delete -node <nodename> -port <ifgrp> -vlan-id <VLAN_ID>
```

   c. Check if there are any interface groups configured on the node by entering the following command and examining its output:

```
network port ifgrp show -node <node2> -ifgrp <ifgrp_name> -instance
```

   The system displays interface group information for the node as shown in the following example:

```
cluster::> network port ifgrp show -node node2 -ifgrp a0a -instance
                  Node: node3
 Interface Group Name: a0a
Distribution Function: ip
        Create Policy: multimode_lacp
          MAC Address: 02:a0:98:17:dc:d4
   Port Participation: partial
        Network Ports: e2c, e2d
             Up Ports: e2c
           Down Ports: e2d
```

   d. If any interface groups are configured on the node, record the names of those groups and the ports assigned to them, and then delete the ports by entering the following command, once for each port:

```
network port ifgrp remove-port -node <nodename> -ifgrp <ifgrp_name> -port
<netport>
```

Retire node2

To retire node2, you must shut node2 down correctly and remove it from the rack or chassis.

Steps

1. Resume the operation:

   ```
   system controller replace resume
   ```

   The node halts automatically.

After you finish

You can decommission node2 after the upgrade is completed. See Decommission the old system.

Stage 5. Install and boot node4

Stage 5. Install and boot node4

During Stage 5, you install and boot node4, map the cluster and node-management ports from node2 to node4, and verify the node4 installation. You also move the NAS data LIFs owned by node2 from node3 to node4, and relocate node2's aggregates from node3 to node4.

Steps

1. Install and boot node4
2. Set the FC or UTA/UTA2 configuration on node4
3. Map ports from node2 to node4
4. Join the quorum when a node has a different set of network ports
5. Verify the node4 installation
6. Restore key-manager configuration on node4
7. Move non-root aggregates and NAS data LIFs owned by node2 from node3 to node4

Install and boot node4

You must install node4 in the rack, transfer node2's connections to node4, boot node4, and install ONTAP. You must then reassign any of node2's spare disks, any disks belonging to the root volume, and any non-root aggregates that were not relocated to node3 earlier in the process, as outlined in this section.

About this task

The relocation operation is paused at the beginning of this stage. This process is mostly automated; the operation pauses to enable you to check its status. You must manually resume the operation. In addition, you must verify the NAS data LIFs have successfully moved to node4.

You need to netboot node4 if it does not have the same version of ONTAP 9 that is installed on node2. After you install node4, boot it from the ONTAP 9 image stored on the web server. You can then download the correct files to the boot media device for subsequent system boots, by following the instructions in Prepare for netboot.

Important:

- If you are upgrading a V-Series system connected to storage arrays or a system with FlexArray Virtualization software that is connected to storage arrays, you must complete Step 1 through Step 21, then leave this section and follow instructions to Configure FC ports on node4 and to Check and configure UTA/UTA2 ports on node4, entering commands in Maintenance mode. You must then return to this section and resume with Step 23.
- However, if you are upgrading a system with storage disks, you must complete this entire section and then proceed to Set the FC or UTA/UTA2 configuration on node4, entering commands at the cluster prompt.

Steps

1. Make sure that node4 has sufficient rack space.

   If node4 is in a separate chassis from node2, you can put node4 in the same location as node3. If node2 and node4 are in the same chassis, then node4 is already in its appropriate rack location.

2. Install node4 in the rack, following the instructions in the *Installation and Setup Instructions* for the node model.
3. Cable node4, moving the connections from node2 to node4.

   Cable the following connections, using the instructions in the *Installation and Setup Instructions* or the *FlexArray Virtualization Installation Requirements and Reference* for the node4 platform, the appropriate disk shelf document, and *High Availability management*.

   Refer to References to link to the *FlexArray Virtualization Installation Requirements and Reference* and *High Availability management*.

   - Console (remote management port)
   - Cluster ports
   - Data ports
   - Cluster and node management ports
   - Storage
   - SAN configurations: iSCSI Ethernet and FC switch ports

   > You might not need to move the interconnect card/FC-VI card or interconnect/FC-VI cable connection from node2 to node4 because most platform models have unique interconnect card models.
   > For the MetroCluster configuration, you must move the FC-VI cable connections from node2 to node4. If the new host does not have an FC-VI card, you might need to move the FC-VI card.

4. Turn on the power to node4, and then interrupt the boot process by pressing `Ctrl-C` at the console terminal to access the boot environment prompt.

   > When you boot node4, you might see the following warning message:

```
WARNING: The battery is unfit to retain data during a power outage. This
is likely
         because the battery is discharged but could be due to other
temporary
         conditions.
         When the battery is ready, the boot process will complete
         and services will be engaged. To override this delay, press 'c'
followed
         by 'Enter'
```

5. If you see the warning message in Step 4, take the following actions:
   a. Check for any console messages that might indicate a problem other than a low NVRAM battery, and, if necessary, take any required corrective action.
   b. Allow the battery to charge and the boot process to complete.

Attention: Do not override the delay; failure to allow the battery to charge could result in a loss of data.

Refer to Prepare for netboot.

6. Configure the netboot connection by choosing one of the following actions.

You must use the management port and IP as the netboot connection. Do not use a data LIF IP or a data outage might occur while the upgrade is being performed.

If Dynamic Host Configuration Protocol (DHCP) is…	Then…
Running	Configure the connection automatically by entering the following command at the boot environment prompt: `ifconfig e0M -auto`
Not running	Manually configure the connection by entering the following command at the boot environment prompt: `ifconfig e0M -addr=<filer_addr> -mask=<netmask> -gw=<gateway> dns=<dns_addr> domain=<dns_domain>` `<filer_addr>` is the IP address of the storage system. `<netmask>` is the network mask of the storage system. `<gateway>` is the gateway for the storage system. `<dns_addr>` is the IP address of a name server on your network. `<dns_domain>` is the Domain Name Service (DNS) domain name. If you use this optional parameter, you do not need a fully qualified domain name in the netboot server URL; you need only the server's host name. **Note:** Other parameters might be necessary for your interface. Enter `help ifconfig` at the firmware prompt for details.

7. Perform netboot on node4:

For…	Then…
FAS/AFF8000 series systems	`netboot http://<web_server_ip/path_to_web-accessible_directory>/netboot/kernel`
All other systems	`netboot http://<web_server_ip/path_to_web-accessible_directory>/<ontap_version>_image.tgz`

The `<path_to_the_web-accessible_directory>` should lead to where you downloaded the `<ontap_version>_image.tgz` in Step 1 in the section Prepare for netboot.

Do not interrupt the boot.

8. From the boot menu, select option `(7) Install new software first`.

This menu option downloads and installs the new ONTAP image to the boot device.

Disregard the following message: `This procedure is not supported for Non-Disruptive Upgrade on an HA pair`
The note applies to nondisruptive upgrades of ONTAP, and not upgrades of controllers. Always use netboot to update the new node to the desired image. If you use another method to install the image on the new controller, the wrong image might install. This issue applies to all ONTAP releases.

9. If you are prompted to continue the procedure, enter `y`, and when prompted for the package, enter the URL:

`http://<web_server_ip/path_to_web-accessible_directory>/<ontap_version>_image.tgz`

10. Complete the following substeps to reboot the controller module:
    a. Enter `n` to skip the backup recovery when you see the following prompt:

```
Do you want to restore the backup configuration now? {y|n}
```

    b. Reboot by entering `y` when you see the following prompt:

```
The node must be rebooted to start using the newly installed
software. Do you want to reboot now? {y|n}
```

    The controller module reboots but stops at the boot menu because the boot device was reformatted, and the configuration data must be restored.

11. Select maintenance mode `5` from the boot menu and enter `y` when you are prompted to continue with the boot.
12. Verify that the controller and chassis are configured as HA:

```
ha-config show
```

The following example shows the output of the `ha-config show` command:

```
Chassis HA configuration: ha
Controller HA configuration: ha
```

System records in a PROM whether they are in an HA pair or stand-alone configuration. The state must be the same on all components within the stand-alone system or HA pair.

13. If the controller and chassis are not configured as HA, use the following commands to correct the configuration:

```
ha-config modify controller ha
```

```
ha-config modify chassis ha
```

If you have a MetroCluster configuration, use the following commands to modify the controller and chassis:

```
ha-config modify controller mcc
```

```
ha-config modify chassis mcc
```

14. Exit maintenance mode:

```
halt
```

Interrupt the autoboot by pressing Ctrl-C at the boot environment prompt.

15. On node3, check the system date, time, and time zone:

```
date
```

16. On node4, check the date by using the following command at the boot environment prompt:

```
show date
```

17. If necessary, set the date on node4:

```
set date <mm/dd/yyyy>
```

18. On node4, check the time by using the following command at the boot environment prompt:

```
show time
```

19. If necessary, set the time on node4:

```
set time <hh:mm:ss>
```

20. If necessary, set the partner system ID on node4:

```
setenv partner- sysid <node2_sysid>
```

a. Save the settings:

```
saveenv
```

21. On the new node, in boot loader, the `partner- sysid` parameter must be set. For node4, `partner-sysid` must be that of node3. Verify the `partner- sysid` for node3:

```
printenv partner- sysid
```

22. Take one of the following actions:

If your system…	Then…
Has disks and no back-end storage	Go to Step 23.
Is a V-Series system or a system with FlexArray Virtualization software connected to storage arrays	a. Go to section Set the FC or UTA/UTA2 configuration on node4 and complete the subsections in this section. b. Return to this section and complete the remaining steps, beginning with Step 23. **Important**: You must reconfigure FC onboard ports, CNA onboard ports, and CNA cards before you boot ONTAP on the V-Series or system with FlexArray Virtualization software.

23. Add the FC initiator ports of the new node to the switch zones.

If required, modify the onboard ports to initiator by referring to the Configure FC ports on node4. See your storage array and zoning documentation for further instructions on zoning.

24. Add the FC initiator ports to the storage array as new hosts, mapping the array LUNs to the new hosts.

See your storage array and zoning documentation for instructions.

25. Modify the worldwide port name (WWPN) values in the host or volume groups associated with array LUNs on the storage array.

Installing a new controller module changes the WWPN values associated with each onboard FC port.

26. If your configuration uses switch-based zoning, adjust the zoning to reflect the new WWPN values.

27. If NetApp Storage Encryption (NSE) is in use on this configuration, the `setenv bootarg.storageencryption.support` command must be set to `true`, and the `kmip.init.maxwait` variable must be set to `off` to avoid a boot loop after the node2 configuration is loaded:

```
setenv bootarg.storageencryption.support true

setenv kmip.init.maxwait off
```

28. Boot node into boot menu:

```
boot_ontap menu
```

If you do not have an FC or UTA/UTA2 configuration, execute Check and configure UTA/UTA2 ports on node4, Step 15 so that node4 can recognize node2's disks.

29. For MetroCluster configuration, V-Series systems and systems with FlexArray Virtualization software connected to storage arrays, go to Check and configure UTA/UTA2 ports on node4, Step 15.

Set the FC or UTA/UTA2 configuration on node4

If node4 has onboard FC ports, onboard unified target adapter (UTA/UTA2) ports, or a UTA/UTA2 card, you must configure the settings before completing the rest of the procedure.

About this task

You might need to complete the Configure FC ports on node4 section, the Check and configure UTA/UTA2 ports on node4, or both sections.

> If node4 does not have onboard FC ports, onboard UTA/UTA2 ports, or a UTA/UTA2 card, and you are upgrading a system with storage disks, you can skip to the Map ports from node2 to node4 section.
> However, if you have a V-Series system or have FlexArray Virtualization Software and are connected to storage arrays, and node4 does not have onboard FC ports, onboard UTA/ UTA2 ports, or a UTA/UTA2 card, you must return to the section *Install and boot node4* and resume at Step 22. Make sure that node4 has sufficient rack space. If node4 is in a separate chassis from node2, you can put node4 in the same location as node3. If node2 and node4 are in the same chassis, then node4 is already in its appropriate rack location.

Choices

- Configure FC ports on node4
- Check and configure UTA/UTA2 ports on node4

Configure FC ports on node4

If node4 has FC ports, either onboard or on an FC adapter, you must set port configurations on the node before you bring it into service because the ports are not preconfigured. If the ports are not configured, you might experience a disruption in service.

Before you begin

You must have the values of the FC port settings from node2 that you saved in the section Prepare the nodes for upgrade.

About this task

You can skip this section if your system does not have FC configurations. If your system has onboard UTA/UTA2 ports or a UTA/UTA2 adapter, you configure them in Check and configure UTA/UTA2 ports on node4.

Important: If your system has storage disks, you must enter the commands in this section at the cluster prompt. If you have a V-Series system or a system with FlexArray Virtualization Software connected to storage arrays, you enter commands in this section in Maintenance mode.

Steps

1. Take one of the following actions:

If the system that you are upgrading…	Then…
Has storage disks	`system node hardware unified-connect show`
Is a V-Series system or has FlexArray Virtualization Software and is connected to storage arrays	`ucadmin show`

   The system displays information about all FC and converged network adapters on the system.

2. Compare the FC settings on node4 with the settings that you captured earlier from node1.
3. Take one of the following actions:

If the system that you are upgrading…	Then…

Has storage disks	Modify the FC ports on node4 as needed:
	• To program target ports:
	`ucadmin modify -m fc -t target <adapter>`
	• To program initiator ports:
	`ucadmin modify -m fc -t initiator <adapter>`
	`-t` is the FC4 type: target or initiator.

Is a V-Series system or has FlexArray Virtualization Software and is connected to storage arrays	Modify the FC ports on node4 as needed: `ucadmin modify -m fc -t initiator -f <adapter_port_name>` `-t` is the FC4 type, target or initiator. **Note**: The FC ports must be programmed as initiators.

4. Exit Maintenance mode:

   `halt`

5. Boot the system from loader prompt:

   `boot_ontap menu`

6. After you enter the command, wait until the system stops at the boot environment prompt.
7. Select option `5` from the boot menu for maintenance mode.

8. Take one of the following actions:

If the system that you are upgrading…	Then…
Has storage disks	• Skip this section and go to Map ports from node2 to node4 if node4 does not have a UTA/UTA2 card or UTA/UTA2 onboard ports.
Is a V-Series system or has FlexArray Virtualization Software and is connected to storage arrays	• Go to Check and configure UTA/UTA2 ports on node4 if node4 has a UTA/UTA2 card or UTA/UTA2 onboard ports. • Skip the section *Check and configure UTA/UTA2 ports on node4* if node4 does not have a UTA/UTA2 card or UTA/UTA2 onboard ports, return to the section *Install and boot node4*, and resume at Step 23.

Check and configure UTA/UTA2 ports on node4

If node4 has onboard UTA/UTA2 ports or a UTA/UTA2A card, you must check the configuration of the ports and configure them, depending on how you want to use the upgraded system.

Before you begin

You must have the correct SFP+ modules for the UTA/UTA2 ports.

About this task

UTA/UTA2 ports can be configured into native FC mode or UTA/UTA2A mode. FC mode supports FC initiator and FC target; UTA/UTA2 mode allows concurrent NIC and FCoE traffic to share the same 10GbE SFP+ interface and supports FC target.

NetApp marketing materials might use the term UTA2 to refer to CNA adapters and ports. However, the CLI uses the term CNA.

UTA/UTA2 ports might be on an adapter or on the controller with the following configurations:

- UTA/UTA2 cards ordered at the same time as the controller are configured before shipment to have the personality you requested.
- UTA/UTA2 cards ordered separately from the controller are shipped with the default FC target personality.
- Onboard UTA/UTA2 ports on new controllers are configured (before shipment) to have the personality you requested.

However, you should check the configuration of the UTA/UTA2 ports on node4 and change it, if necessary.

Attention: If your system has storage disks, you enter the commands in this section at the cluster prompt unless directed to enter Maintenance mode. If you have a MetroCluster FC system, V-Series system or a system with FlexArray Virtualization software that is connected to storage arrays, you must be in Maintenance mode to configure UTA/UTA2 ports.

Steps

1. Check how the ports are currently configured by using one of the following commands on node4:

If the system…	Then…
Has storage disks	`system node hardware unified-connect show`
Is a V-Series system or has FlexArray Virtualization Software and is connected to storage arrays	`ucadmin show`

The system displays output similar to the following example:

```
*> ucadmin show
                Current  Current    Pending   Pending   Admin
Node   Adapter  Mode     Type       Mode      Type      Status
----   -------  ---      ---------  -------   --------  -------
f-a    0e       fc       initiator  -          -        online
f-a    0f       fc       initiator  -          -        online
f-a    0g       cna      target     -          -        online
f-a    0h       cna      target     -          -        online
f-a    0e       fc       initiator  -          -        online
f-a    0f       fc       initiator  -          -        online
f-a    0g       cna      target     -          -        online
f-a    0h       cna      target     -          -        online
*>
```

2. If the current SFP+ module does not match the desired use, replace it with the correct SFP+ module.

   Contact your NetApp representative to obtain the correct SFP+ module.

3. Examine the output of the `ucadmin show` command and determine whether the UTA/UTA2 ports have the personality you want.
4. Take one of the following actions:

If the CNA ports…	Then…
Do not have the personality that you want	Go to Step 5.
Have the personality that you want	Skip Step 5 through Step 12 and go to Step 13.

5. Take one of the following actions:

If you are configuring…	Then…
Ports on a UTA/UTA2 card	Go to Step 7
Onboard UTA/UTA2 ports	Skip Step 7 and go to Step 8.

6. If the adapter is in initiator mode, and if the UTA/UTA2 port is online, take the UTA/UTA2 port offline:

```
storage disable adapter <adapter_name>
```

Adapters in target mode are automatically offline in Maintenance mode.

7. If the current configuration does not match the desired use, change the configuration as needed:

```
ucadmin modify -m fc|cna -t initiator|target <adapter_name>
```

   - `-m` is the personality mode, FC or 10GbE UTA.
   - `-t` is the FC4 type, `target` or `initiator`.

> You must use FC initiator for tape drives, FlexArray Virtualization systems, and MetroCluster configurations. You must use the FC target for SAN clients.

8. Verify the settings by using the following command and examining its output:

```
ucadmin show
```

9. Verify the settings:

If the system…	Then…
Has storage disks	`ucadmin show`
Is a V-Series system or has FlexArray Virtualization Software and is connected to storage arrays	`ucadmin show`

The output in the following examples shows that the FC4 type of adapter "1b" is changing to `initiator` and that the mode of adapters "2a" and "2b" is changing to `cna`:

```
*> ucadmin show
Node  Adapter  Current Mode  Current Type  Pending Mode  Pending Type
Admin Status
----  -------  ------------  ------------  ------------  ------------
------------
f-a   1a       fc             initiator    -             -
online
f-a   1b       fc             target       -             initiator
online
f-a   2a       fc             target       cna           -
online
f-a   2b       fc             target       cna           -
online
4 entries were displayed.
*>
```

10. Place any target ports online by entering one of the following commands, once for each port:

If the system…	Then…
Has storage disks	`network fcp adapter modify -node <node_name> -adapter <adapter_name> -state up`
Is a V-Series system or has FlexArray Virtualization Software and is connected to storage arrays	`fcp config <adapter_name> up`

11. Cable the port.

12. Take one of the following actions:

If the system…	Then…
Has storage disks	Go to the section Map ports from node2 to node4.
Is a V-Series system or has FlexArray Virtualization Software and is connected to storage arrays	Return to the section *Install and boot node4*, and resume at Step 23.

13. Exit Maintenance mode:

```
halt
```

14. Boot node into boot menu:

```
boot_ontap menu
```

If you are upgrading to an A800, go to Step 23.

15. On node4, go to the boot menu, and using 22/7, select the hidden option `boot_after_controller_replacement`. At the prompt, enter node2 to reassign the disks of node2 to node4, as per the following example.

```
LOADER-A> boot_ontap menu ...
******************************
*                            *
* Press Ctrl-C for Boot Menu. *
*                            *
******************************
.
.
Please choose one of the following:

(1) Normal Boot.
(2) Boot without /etc/rc.
(3) Change password.
(4) Clean configuration and initialize all disks.
(5) Maintenance mode boot.
```

```
(6) Update flash from backup config.
(7) Install new software first.
(8) Reboot node.
(9) Configure Advanced Drive Partitioning.
Selection (1-9)? 22/7
.
.
(boot_after_controller_replacement) Boot after controller upgrade
(9a)                                Unpartition all disks and remove
their ownership information.
(9b)                                Clean configuration and initialize
node with partitioned disks.
(9c)                                Clean configuration and initialize
node with whole disks.
(9d)                                Reboot the node.
(9e)                                Return to main boot menu.

Please choose one of the following:

(1) Normal Boot.
(2) Boot without /etc/rc.
(3) Change password.
(4) Clean configuration and initialize all disks.
(5) Maintenance mode boot.
(6) Update flash from backup config.
(7) Install new software first.
(8) Reboot node.
(9) Configure Advanced Drive Partitioning.
Selection (1-9)? boot_after_controller_replacement
.
This will replace all flash-based configuration with the last backup to
disks. Are you sure you want to continue?: yes
.
.
Controller Replacement: Provide name of the node you would like to
replace: <name of the node being replaced>
.
.
Changing sysid of node <node being replaced> disks.
Fetched sanown old_owner_sysid = 536953334 and calculated old sys id =
536953334
Partner sysid = 4294967295, owner sysid = 536953334
.
.
.
Terminated
```

```
<node reboots>
.
.
System rebooting...
.
Restoring env file from boot media...
copy_env_file:scenario = head upgrade
Successfully restored env file from boot media...
.
.
System rebooting...
.
.
.
WARNING: System ID mismatch. This usually occurs when replacing a boot
device or NVRAM cards!
Override system ID? {y|n} y
Login: ...
```

16. If the system goes into a reboot loop with the message `no disks found`, this is because it has reset the ports back to the target mode and therefore is unable to see any disks. Continue with Step 17 through Step 22 to resolve this.
17. Press `Ctrl-C` during autoboot to stop the node at the `LOADER>` prompt.
18. At the loader prompt, enter maintenance mode:

    ```
    boot_ontap maint
    ```

19. In maintenance mode, display all the previously set initiator ports that are now in target mode:

    ```
    ucadmin show
    ```

    Change the ports back to initiator mode:

    ```
    ucadmin modify -m fc -t initiator -f <adapter name>
    ```

20. Verify that the ports have been changed to initiator mode:

    ```
    ucadmin show
    ```

21. Exit maintenance mode:

    ```
    halt
    ```

22. At the loader prompt boot up:

    ```
    boot_ontap
    ```

    Now, on booting, the node can detect all the disks that were previously assigned to it and can boot up as expected.

23. If you are upgrading from a system with external disks to a system that supports internal and external disks (AFF A800 systems, for example), set the node2 aggregate as the root aggregate to ensure node4 boots from the root aggregate of node2. To set the root aggregate, go to the boot menu and select option `5` to enter maintenance mode.

You must perform the following substeps in the exact order shown; failure to do so might cause an outage or even data loss.

The following procedure sets node4 to boot from the root aggregate of node2:

a. Enter maintenance mode:

```
boot_ontap maint
```

b. Check the RAID, plex, and checksum information for the node2 aggregate:

```
aggr status -r
```

c. Check the status of the node2 aggregate:

```
aggr status
```

d. If necessary, bring the node2 aggregate online:

```
aggr_online root_aggr_from_<node2>
```

e. Prevent the node4 from booting from its original root aggregate:

```
aggr offline <root_aggr_on_node4>
```

f. Set the node2 root aggregate as the new root aggregate for node4:

```
aggr options aggr_from_<node2> root
```

Map ports from node2 to node4

You must verify that the physical ports on node2 map correctly to the physical ports on node4, which will enable node4 to communicate with other nodes in the cluster and with the network after the upgrade.

About this task

Refer to References to link to the *Hardware Universe* to capture information about the ports on the new nodes. You will use the information later in this section.

The software configuration of node4 must match the physical connectivity of node4 and IP connectivity must be restored before you continue with the upgrade.

Port settings might vary, depending on the model of the nodes. You must make the original node's port and LIF configuration compatible with what you plan the new node's configuration to be. This is because the new node replays the same configuration when it boots, meaning when you boot node4 that Data ONTAP will try to host LIFs on the same ports that were used on node2.

Therefore, if the physical ports on node2 do not map directly to the physical ports on node4, then software

configuration changes will be required to restore cluster, management, and network connectivity after the boot. In addition, if the cluster ports on node2 do not directly map to the cluster ports on node4, node4 might not automatically rejoin the quorum when it is rebooted until a software configuration change is made to host the cluster LIFs on the correct physical ports.

Steps

1. Record all the node2 cabling information for node2, the ports, broadcast domains, and IPspaces, in the table:

LIF	Node2 ports	Node2 IPspaces	Node2 broadcast domains	Node4 ports	Node4 IPspaces	Node4 broadcast domains
Cluster 1						
Cluster 2						
Cluster 3						
Cluster 4						
Node management						
Cluster management						
Data 1						
Data 2						
Data 3						
Data 4						
SAN						
Intercluster port						

2. Record all the cabling information for node4, the ports, broadcast domains, and IPspaces, in the table.
3. Follow these steps to verify if the setup is a two-node switchless cluster:
   a. Set the privilege level to advanced:

      ```
      cluster::> set -privilege advanced
      ```

   b. Verify if the setup is a two-node switchless cluster:

      ```
      cluster::> network options switchless-cluster show
      ```

      ```
      cluster::*> network options switchless-cluster show
      Enable Switchless Cluster: false/true
      ```

      The value of this command must match the physical state of the system.

   c. Return to the administration privilege level:

```
cluster::*> set -privilege admin
cluster::>
```

4. Follow these steps to place node4 into quorum:
   a. Boot node4. See Install and boot node4 to boot the node if you have not already done so.
   b. Verify that the new cluster ports are in the Cluster broadcast domain:

      ```
      network port show -node <node> -port <port> -fields broadcast-domain
      ```

      The following example shows that port "e0a" is in the Cluster domain on node4:

      ```
      cluster::> network port show -node node4 -port e0a -fields broadcast-
      domain
      node       port broadcast-domain
      ---------- ---- ---------------
      node4      e0a  Cluster
      ```

   c. If the cluster ports are not in the Cluster broadcast-domain, add them with the following command:

      ```
      broadcast-domain add-ports -ipspace Cluster -broadcast-domain Cluster -ports
      <node:port>
      ```

   d. Add the correct ports to the Cluster broadcast domain:

      ```
      network port modify -node -port -ipspace Cluster -mtu 9000
      ```

      This example adds Cluster port "e1b" on node4:

      ```
      network port modify -node node4 -port e1b -ipspace Cluster -mtu 9000
      ```

   e. Migrate the cluster LIFs to the new ports, once for each LIF:

      ```
      network interface migrate -vserver Cluster -lif <lif_name> -source-node
      node4 destination-node node4 -destination-port <port_name>
      ```

   f. Modify the home port of the cluster LIFs:

      ```
      network interface modify -vserver Cluster -lif <lif_name> -home-port
      <port_name>
      ```

   g. Remove the old ports from the Cluster broadcast domain:

      ```
      network port broadcast-domain remove-ports
      ```

      This command removes port "e0d" on node4:

      ```
      network port broadcast-domain remove-ports -ipspace Cluster -broadcast
      -domain Cluster -ports node4:e0d
      ```

h. Verify that node4 has rejoined quorum:

```
cluster show -node node4 -fields health
```

5. Adjust the broadcast domains hosting your cluster LIFs and node-management/clustermanagement LIFs. Confirm that each broadcast domain contains the correct ports. A port cannot be moved between broadcast domains if it is hosting or is home to a LIF so you may need to migrate and modify the LIFs as shown in the following steps:

   a. Display the home port of a LIF:

   ```
   network interface show -fields home-node,home-port
   ```

   b. Display the broadcast domain containing this port:

   ```
   network port broadcast-domain show -ports <node_name:port_name>
   ```

   c. Add or remove ports from broadcast domains:

   ```
   network port broadcast-domain add-ports
   network port broadcast-domain remove-ports
   ```

   d. Modify a LIF's home port:

   ```
   network interface modify -vserver <vserver> -lif <lif_name> -home-port
   <port_name>
   ```

6. Adjust the intercluster broadcast domains and migrate the intercluster LIFs, if necessary, using the same commands shown in Step 5.
7. Adjust any other broadcast domains and migrate the data LIFs, if necessary, using the same commands shown in Step 5.
8. If there were any ports on node2 that no longer exist on node4, follow these steps to delete them:

   a. Access the advanced privilege level on either node:

   ```
   set -privilege advanced
   ```

   b. To delete the ports:

   ```
   network port delete -node <node_name> -port <port_name>
   ```

   c. Return to the admin level:

   ```
   set -privilege admin
   ```

9. Adjust all the LIF failover groups:

   ```
   network interface modify -failover-group <failover_group> -failover-policy
   <failover_policy>
   ```

   The following command sets the failover policy to `broadcast-domain-wide` and uses the ports in failover group `fg1` as failover targets for LIF `data1` on `node4`:

   ```
   network interface modify -vserver node4 -lif data1 failover-policy broadcast-
   ```

```
domainwide -failover-group fg1
```

Refer to References to link to *Network Management* or the *ONTAP 9 Commands: Manual Page Reference* and see *Configuring failover settings on a LIF* for more information.

10. Verify the changes on node4:

```
network port show -node node4
```

11. Each cluster LIF must be listening on port 7700. Verify that the cluster LIFs are listening on port 7700:

```
::> network connections listening show -vserver Cluster
```

Port 7700 listening on cluster ports is the expected outcome as shown in the following example for a two-node cluster:

```
Cluster::> network connections listening show -vserver Cluster
Vserver Name     Interface Name:Local Port     Protocol/Service
---------------- ----------------------------  -------------------
Node: NodeA
Cluster          NodeA_clus1:7700               TCP/ctlopcp
Cluster          NodeA_clus2:7700               TCP/ctlopcp
Node: NodeB
Cluster          NodeB_clus1:7700               TCP/ctlopcp
Cluster          NodeB_clus2:7700               TCP/ctlopcp
4 entries were displayed.
```

12. If necessary, for each cluster LIF that is not listening on port 7700, set the administrative status of the LIF to `down` and then `up`:

```
::> net int modify -vserver Cluster -lif <cluster-lif> -status-admin down; net
int modify -vserver Cluster -lif <cluster-lif> -status-admin up
```

Repeat step 11 to verify that the cluster LIF is now listening on port 7700.

Join the quorum when a node has a different set of network ports

The node with the new controller boots and attempts to join the cluster automatically at first; however, if the new node has a different set of network ports, you must perform the following steps to confirm that the node successfully joins the quorum.

About this task

You can use these instructions for any relevant node. Node3 is used throughout the following sample.

Steps

1. Verify that the new cluster ports are in the Cluster broadcast domain by entering the following command and checking the output:

```
network port show -node node -port port -fields broadcast-domain
```

The following example shows that port "e1a" is in the Cluster domain on node3:

```
cluster::> network port show -node node3 -port e1a -fields broadcast-
domain
node    port  broadcast-domain
------  ----  ---------------
node3   e1a   Cluster
```

2. Add the correct ports to the Cluster broadcast domain by entering the following command and checking the output:

   `network port modify -node -port -ipspace Cluster -mtu 9000`

   This example adds Cluster port "e1b" on node3:

   ```
   network port modify -node node3 -port e1b -ipspace Cluster -mtu 9000
   ```

3. Migrate the cluster LIFs to the new ports, once for each LIF, using the following command:

   `network interface migrate -vserver Cluster -lif <lif_name> -source-node node3 destination-node node3 -destination-port <port_name>`

4. Modify the home port of the cluster LIFs as follows:

   `network interface modify -vserver Cluster -lif <lif_name> –home-port <port_name>`

5. If the cluster ports are not in the Cluster broadcast-domain, add them with the following command:

   `network port broadcast-domain add-ports -ipspace Cluster -broadcastdomain Cluster ports node:port`

6. Remove the old ports from the Cluster broadcast domain. You can use for any relevant node. The following command removes port "e0d" on node3:

   `network port broadcast-domain remove-ports network port broadcast-domain remove-ports ipspace Cluster -broadcast-domain Cluster -ports node3:e0d`

7. Verify the node has rejoined quorum as follows:

   `cluster show -node node3 -fields health`

8. Adjust the broadcast domains hosting your cluster LIFs and node-management/cluster management LIFs. Confirm that each broadcast domain contains the correct ports. A port cannot be moved between broadcast domains if it is hosting or is home to a LIF, so you might need to migrate and modify the LIFs as follows:

   a. Display the home port of a LIF:

      `network interface show -fields home-node,home-port`

b. Display the broadcast domain containing this port:

```
network port broadcast-domain show -ports <node_name:port_name>
```

c. Add or remove ports from broadcast domains:

```
network port broadcast-domain add-ports network port broadcast-domain
remove-port
```

d. Modify a home port of a LIF:

```
network interface modify -vserver <vserver-name> -lif <lif_name> –home-port
<port_name>
```

Adjust the intercluster broadcast domains and migrate the intercluster LIFs, if necessary. The data LIFs remain unchanged.

Verify the node4 installation

After you install and boot node4, you must verify that it is installed correctly, that it is part of the cluster, and that it can communicate with node3.

About this task

At this point in the procedure, the operation will have paused as node4 joins quorum.

Steps

1. Verify that node4 has joined quorum:

```
cluster show -node node4 -fields health
```

2. Verify that node4 is part of the same cluster as node3 and healthy by entering the following command:

```
cluster show
```

3. Check the status of the operation and verify that the configuration information for node4 is the same as node2:

```
system controller replace show-details
```

If the configuration is different for node4, a system disruption might occur later in the procedure.

4. Check that the replaced controller is configured correctly for MetroCluster configuration and not in switch-over mode.

Attention: At this stage MetroCluster configuration will not be in a normal state and you might have errors to resolve. See Verify the health of the MetroCluster configuration.

Re-create VLANs, interface groups, and broadcast domains on node4

After you confirm that node4 is in quorum and can communicate with node3, you must re-create node2's VLANs, interface groups, and broadcast domains on node4. You must also add the node3 ports to the newly re-created broadcast domains.

About this task

For more information on creating and re-creating VLANs, interface groups, and broadcast domains, go to References and link to *Network Management*.

Steps

1. Re-create the VLANs on node4 using the node2 information recorded in the Relocate non-root aggregates and NAS data LIFs from node2 to node3 section:

   ```
   network port vlan create -node <node4> -vlan <vlan-names>
   ```

2. Re-create the interface groups on node4 using the node2 information recorded in the Relocate non-root aggregates and NAS data LIFs from node2 to node3 section:

   ```
   network port ifgrp create -node <node4> -ifgrp <port_ifgrp_names>-distr-func
   ```

3. Re-create the broadcast domains on node4 using the node2 information recorded in the Relocate non-root aggregates and NAS data LIFs from node2 to node3 section:

   ```
   network port broadcast-domain create -ipspace Default -broadcast-domain
   <broadcast_domain_names> -mtu <mtu_size> -ports
   <node_name:port_name,node_name:port_name>
   ```

4. Add the node4 ports to the newly re-created broadcast domains:

   ```
   network port broadcast-domain add-ports -broadcast-domain
   <broadcast_domain_names> -ports <node_name:port_name,node_name:port_name>
   ```

Restore key-manager configuration on node4

If you are using NetApp Volume Encryption (NVE) to encrypt volumes on the system you are upgrading, the encryption configuration must be synchronized to the new nodes. Encrypted volumes are taken offline when ARL is complete for node1 aggregates from node2 to node4.

Steps

1. To synchronize encryption configuration for Onboard Key Manager, run the following command at the cluster prompt:

For this ONTAP version…	Use this command…
ONTAP 9.6 or 9.7	security key-manager onboard sync
ONTAP 9.5	security key-manager setup -node <node_name>

2. Enter the cluster-wide passphrase for the Onboard Key Manager.

Move non-root aggregates and NAS data LIFs owned by node2 from node3 to node4

After you verify the node4 installation and before you relocate aggregates from node3 to node4, you must move the NAS data LIFs belonging to node2 that are currently on node3 from node3 to node4. You also need to verify the SAN LIFs exist on node4.

About this task

Remote LIFs handle traffic to SAN LUNs during the upgrade procedure. Moving SAN LIFs is not necessary for

cluster or service health during the upgrade. SAN LIFs are not moved unless they need to be mapped to new ports. You will verify that the LIFs are healthy and located on appropriate ports after you bring node4 online.

Steps

1. Resume the relocation operation:

   ```
   system controller replace resume
   ```

   The system performs the following tasks:

   - Cluster quorum check
   - System ID check
   - Image version check
   - Target platform check
   - Network reachability check

   The operation pauses at this stage in the network reachability check.

2. Manually verify that the network and all VLANs, interface groups, and broadcast domains have been configured correctly.
3. Resume the relocation operation:

   ```
   system controller replace resume
   ```

   ```
   To complete the "Network Reachability" phase, ONTAP network
   configuration must be manually adjusted to match the new physical
   network configuration of the hardware. This includes assigning network
   ports to the correct broadcast domains,creating any required ifgrps and
   VLANs, and modifying the home-port parameter of network interfaces to
   the appropriate ports.Refer to the "Using aggregate relocation to
   upgrade controller hardware on a pair of nodes running ONTAP 9.x"
   documentation, Stages 3 and 5. Have all of these steps been manually
   completed? [y/n]
   ```

4. Enter `y` to continue.
5. The system performs the following checks:

   - Cluster health check
   - Cluster LIF status check

   After performing these checks, the system relocates the non-root aggregates and NAS data LIFs owned by node2 to the new controller, node4.
   The system pauses once the resource relocation is complete.

6. Check the status of the aggregate relocation and NAS data LIF move operations:

   ```
   system controller replace show-details
   ```

7. Manually verify that the non-root aggregates and NAS data LIFs have been successfully relocated to

node4.

If any aggregates fail to relocate or are vetoed, you must take manually relocate the aggregates, or override either the vetoes or destination checks, if necessary. See the section Relocate failed or vetoed aggregates for more information.

8. Confirm that the SAN LIFs are on the correct ports on node4 by completing the following substeps:
   a. Enter the following command and examine its output:

      ```
      network interface show -data-protocol iscsi|fcp -home-node <node4>
      ```

      The system returns output similar to the following example:

      ```
      cluster::> net int show -data-protocol iscsi|fcp -home-node node3
              Logical    Status     Network            Current Current Is
      Vserver Interface  Admin/Oper Address/Mask       Node    Port    Home
      ------- ---------- ---------- ------------------ ------- ------- ---
      vs0
              a0a        up/down    10.63.0.53/24      node3   a0a     true
              data1      up/up      10.63.0.50/18      node3   e0c     true
              rads1      up/up      10.63.0.51/18      node3   e1a     true
              rads2      up/down    10.63.0.52/24      node3   e1b     true
      vs1
              lif1       up/up      172.17.176.120/24  node3   e0c     true
              lif2       up/up      172.17.176.121/24  node3   e1a     true
      ```

   b. If node4 has any SAN LIFs or groups of SAN LIFs that are on a port that did not exist on node2 or that need to be mapped to a different port, move them to an appropriate port on node4 by completing the following substeps:
      i. Set the LIF status to down by entering the following command:

         ```
         network interface modify -vserver <vserver_name> -lif <lif_name> -status
         -admin down
         ```

      ii. Remove the LIF from the port set:

         ```
         portset remove -vserver <vserver_name> -portset <portset_name> -port-name
         <port_name>
         ```

      iii. Enter one of the following commands:
         - Move a single LIF by entering the following command:

           ```
           network interface modify -vserver <vserver_name> -lif <lif_name> -home
           -port <new_home_port>
           ```

         - Move all the LIFs on a single nonexistent or incorrect port to a new port by entering the following command:

           ```
           network interface modify {-home-port <port_on_node1> -home-node
           ```

```
<node1> -role data} -home-port <new_home_port_on_node3>
```

- Add the LIFs back to the port set:

```
portset add -vserver <vserver_name> -portset <portset_name> -port-name
<port_name>
```

> You must confirm that you move SAN LIFs to a port that has the same link speed as the original port.

c. Modify the status of all LIFs to `up` so the LIFs can accept and send traffic on the node by entering the following command:

```
network interface modify -home-port <port_name> -home-node <node4> -lif data
-statusadmin up
```

d. Enter the following command and examine its output to verify that LIFs have been moved to the correct ports and that the LIFs have the status of `up` by entering the following command on either node and examining the output:

```
network interface show -home-node <node4> -role data
```

e. If any LIFs are down, set the administrative status of the LIFs to up by entering the following command, once for each LIF:

```
network interface modify -vserver <vserver_name> -lif <lif_name> -status
-admin up
```

9. Resume the operation to prompt the system to perform the required post-checks:

```
system controller replace resume
```

The system performs the following post-checks:

- Cluster quorum check
- Cluster health check
- Aggregates reconstruction check
- Aggregate status check
- Disk status check
- Cluster LIF status check

Stage 6. Complete the upgrade

Stage 6. Complete the upgrade

During stage 6, ensure that the new nodes are set up correctly. If one of the new nodes has a unified target adapter, you must restore any port configurations and might need to change the personality of the adapter. You should also set up Storage Encryption if the new nodes are encryption-enabled. You should also decommission the old nodes.

Steps

1. Ensure that the new controllers are set up correctly
2. Set up Storage Encryption on the new controller module
3. Set up NetApp Encryption on the new controller module
4. Decommission the old system
5. Resume SnapMirror operations

For MetroCluster FC configuration

For MetroCluster FC configuration, you must replace the disaster recovery/failover site nodes as soon as possible. Mismatch in controller models within a MetroCluster is not supported because controller model mismatch can cause disaster recovery mirroring to go offline. Use the command `-skip-metrocluster-check true` option to bypass MetroCluster checks when you are replacing nodes at second site.

Confirm that the new controllers are set up correctly

To confirm correct setup, you must enable the HA pair. You must also verify that node3 and node4 can access each other's storage and that neither owns data LIFs belonging to other nodes on the cluster. In addition, you must confirm that node3 owns node1's aggregates and that node4 owns node2's aggregates, and that the volumes for both nodes are online.

Steps

1. After the post-checks of node2, the storage failover and cluster HA pair for the node2 cluster are enabled. When the operation is done, both nodes show as completed and the system performs some cleanup operations.
2. Verify that storage failover is enabled:

   ```
   storage failover show
   ```

   The following example shows the output of the command when storage failover is enabled:

   ```
   cluster::> storage failover show
                       Takeover
   Node     Partner  Possible   State Description
   -------- -----    -------    ------------------
   node3    node4    true       Connected to node4
   node4    node3    true       Connected to node3
   ```

3. Verify that node3 and node4 belong to the same cluster by using the following command and examining the output:

   ```
   cluster show
   ```

4. Verify that node3 and node4 can access each other's storage by using the following command and examining the output:

   ```
   storage failover show -fields local-missing- disks,partner-missing-disks
   ```

5. Verify that neither node3 nor node4 owns data LIFs home-owned by other nodes in the cluster by using the following command and examining the output:

   ```
   network interface show
   ```

   If neither node3 or node4 owns data LIFs home-owned by other nodes in the cluster, revert the data LIFs to their home owner:

   ```
   network interface revert
   ```

6. Verify that node3 owns the aggregates from node1 and that node4 owns the aggregates from node2:

   ```
   storage aggregate show -owner-name <node3>

   storage aggregate show -owner-name <node4>
   ```

7. Determine whether any volumes are offline:

   ```
   volume show -node <node3> -state offline

   volume show -node <node4> -state offline
   ```

8. If any volumes are offline, compare them with the list of offline volumes that you captured in the section Prepare the nodes for upgrade, and bring online any of the offline volumes, as required, by using the following command, once for each volume:

   ```
   volume online -vserver <vserver_name> -volume <volume_name>
   ```

9. Install new licenses for the new nodes by using the following command for each node:

   ```
   system license add - license-code <license_code,license_code,license_code…>
   ```

   The license-code parameter accepts a list of 28 upper-case alphabetic character keys. You can add one license at a time, or you can add multiple licenses at once, separating each license key by a comma.

10. Remove all of the old licenses from the original nodes by using one of the following commands:

    ```
    system license clean-up -unused -expired

    system license delete -serial-number <node_serial_number> -package
    <licensable_package>
    ```

    - Delete all expired licenses:

      ```
      system license clean-up -expired
      ```

    - Delete all unused licenses:

      ```
      system license clean-up -unused
      ```

    - Delete a specific license from a cluster by using the following commands on the nodes:

      ```
      system license delete -serial-number <node1_serial_number> -package *
      ```

```
system license delete -serial-number <node2_serial_number> -package *
```

The following output is displayed:

```
Warning: The following licenses will be removed:
<list of each installed package>
Do you want to continue? {y|n}: y
```

Enter `y` to remove all of the packages.

11. Verify that the licenses are correctly installed by using the following command and examining the output:

    ```
    system license show
    ```

    You can compare the output with the output that you captured in the section Prepare the nodes for upgrade.

12. If NetApp Storage Encryption (NSE) was in use on the configuration and you set the `setenv bootarg.storageencryption.support` command to `true` with the `<kmip.init.maxwait>` variable `off` (in Install and boot node4, Step 27), you need to reset the variable:

    ```
    set diag; systemshell -node <node_name> -command sudo kenv -u -p
    kmip.init.maxwait
    ```

13. Configure the SPs by using the following command on both nodes:

    ```
    system service-processor network modify -node <node_name>
    ```

    Refer to References to link to the *System Administration Reference* for information about the SPs and the *ONTAP 9 Commands: Manual Page Reference* for detailed information about the system `service-processor network modify` command.

14. Take the following actions on one of the new nodes:

    a. Enter advanced privilege level:

       ```
       set -privilege advanced
       ```

    b. Enter the following command:

       ```
       storage failover modify -node <node_name> - cifs- ndo-duration
       default|medium|low
       ```

       - Enter `medium` if the system will have workloads in which 50% to 75% of the operations will be 4 KB or smaller.
       - Enter `low` if the system will have workloads in which 75% to 100% of the operations will be 4 KB or smaller.

    c. Return to the admin level:

       ```
       set -privilege admin
       ```

d. Reboot the system to ensure that the changes take effect.

15. If you want to set up a switchless cluster on the new nodes, refer to References to link to the *NetApp Support Site* and follow the instructions in *Transitioning to a two-node switchless cluster*.

After you finish

If Storage Encryption is enabled on node3 and node4, complete the section Set up Storage Encryption on the new controller module. Otherwise, complete the section Decommission the old system.

Set up Storage Encryption on the new controller module

If the replaced controller or the HA partner of the new controller uses Storage Encryption, you must configure the new controller module for Storage Encryption, including installing SSL certificates and setting up key management servers.

About this task

This procedure includes steps that are performed on the new controller module. You must enter the command on the correct node.

Steps

1. Verify that the key management servers are still available, their status, and their authentication key information:

   ```
   security key-manager show -status

   security key-manager query
   ```

2. Add the key management servers listed in the previous step to the key management server list in the new controller.
   a. Add the key management server:

      ```
      security key-manager -add <key_management_server_ip_address>
      ```

   b. Repeat the previous step for each listed key management server. You can link up to four key management servers.
   c. Verify the that the key management servers were added successfully:

      ```
      security key-manager show
      ```

3. On the new controller module, run the key management setup wizard to set up and install the key management servers.

   You must install the same key management servers that are installed on the existing controller module.

   a. Launch the key management server setup wizard on the new node:

      ```
      security key-manager setup -node <new_controller_name>
      ```

   b. Complete the steps in the wizard to configure key management servers.
4. Restore authentication keys from all linked key management servers to the new node:

   ```
   security key-manager restore -node <new_controller_name>
   ```

Set up NetApp Volume Encryption on the new controller module

If the replaced controller or the HA partner of the new controller uses NetApp Volume Encryption, you must configure the new controller module for NetApp Volume Encryption.

About this task

This procedure includes steps that are performed on the new controller module. You must enter the command on the correct node.

Steps

1. Verify that the key management servers are still available, their status, and their authentication key information:

For this ONTAP version…	Use this command…
ONTAP 9.6 or 9.7	`security key-manager key query -node node`
ONTAP 9.5	`security key-manager key show`

2. Add the key management servers listed in the previous step to the key management server list in the new controller:
   a. Add the key management server:

      `security key-manager -add <key_management_server_ip_address>`

   b. Repeat the previous step for each listed key management server.

      You can link up to four key management servers.

   c. Verify the that the key management servers were added successfully:

      `security key-manager show`

3. On the new controller module, run the key management setup wizard to set up and install the key management servers.

   You must install the same key management servers that are installed on the existing controller module.

   a. Launch the key management server setup wizard on the new node:

      `security key-manager setup -node <new_controller_name>`

   b. Complete the steps in the wizard to configure key management servers.
4. Restore authentication keys from all linked key management servers to the new node.
   - Restore authentication for external key manager:

     `security key-manager external restore`

     This command needs the Onboard Key Manager (OKM) passphrase.

   - Restore authentication for OKM:

For this ONTAP version…	Use this command…
ONTAP 9.6 or 9.7	`security key-manager onboard sync`
ONTAP 9.5	`security key-manager setup -node <node_name>`

After you finish

Check if any volumes were taken offline because authentication keys were not available or External Key Management servers could not be reached. Bring those volumes back online using the `volume online` command.

Decommission the old system

After upgrading, you can decommission the old system through the NetApp Support Site. Decommissioning the system tells NetApp that the system is no longer in operation and removes it from support databases.

Steps

1. Refer to References to link to the *NetApp Support Site* and log in.
2. Select **Products > My Products** from the menu.
3. On the **View Installed Systems** page, choose which **Selection Criteria** you want to use to display information about your system.

   You can choose one of the following to locate your system:

   - Serial Number (located on the back of the unit)
   - Serial Numbers for My Location
4. Select **Go!**

   A table displays cluster information, including the serial numbers.
5. Locate the cluster in the table and select **Decommission this system** from the Product Tool Set drop-down menu.

Resume SnapMirror operations

You can resume SnapMirror transfers that were quiesced before upgrade and resume the SnapMirror relationships. The updates are on schedule after the upgrade is completed.

Steps

1. Verify the SnapMirror status on the destination:

   ```
   snapmirror show
   ```
2. Resume the SnapMirror relationship:

   ```
   snapmirror resume -destination-vserver <vserver_name>
   ```

Troubleshoot

Troubleshoot

You might encounter a failure while upgrading the node pair. The node might crash, aggregates might not relocate, or LIFs might not migrate. The cause of the failure and its solution depend on when the failure occurred during the upgrade procedure.

Refer to the table describing the different phases of the procedure in the section Overview of the ARL upgrade. Information about the failures that can occur is listed by the phase of the procedure.

Aggregate relocation failures

Aggregate relocation (ARL) might fail at different points during the upgrade.

Check for aggregate relocation failure

During the procedure, ARL might fail in Stage 2, Stage 3, or Stage 5.

Steps

1. Enter the following command and examine the output:

   `storage aggregate relocation show`

   The `storage aggregate relocation show` command shows you which aggregates were successfully relocated and which ones were not, along with the causes of failure.

2. Check the console for any EMS messages.
3. Take one of the following actions:

   - Take the appropriate corrective action, depending on the output of the `storage aggregate relocation show` command and the output of the EMS message.
   - Force relocation of the aggregate or aggregates by using the `override-vetoes` option or the `override-destination-checks` option of the `storage aggregate relocation start` command.

   For detailed information about the `storage aggregate relocation start`, `override- vetoes`, and `override-destination-checks` options, refer to References to link to the *ONTAP 9 Commands: Manual Page Reference*.

Aggregates originally on node1 are owned by node4 after completion of the upgrade

At the end of the upgrade procedure, node3 should be the new home node of aggregates that originally had node1 as the home node. You can relocate them after the upgrade.

About this task

Aggregates might fail to relocate correctly, having node1 as their home node instead of node3 under the following circumstances:

- During Stage 3, when aggregates are relocated from node2 to node3.
  Some of the aggregates being relocated have node1 as their home node. For example, such an aggregate could be called aggr_node_1. If relocation of aggr_node_1 fails during Stage 3, and relocation cannot be

forced, then the aggregate will be left behind on node2.

- After Stage 4, when node2 is replaced with node4.
  When node2 is replaced, aggr_node_1 will come online with node4 as its home node instead of node3.

You can fix the incorrect ownership problem after Stage 6 once storage failover has been enabled by completing the following steps:

Steps

1. Enter the following command to get a list of aggregates:

   ```
   storage aggregate show -nodes <node4> -is-home true
   ```

   To identify aggregates that were not correctly relocated, refer to the list of aggregates with the home owner of node1 that you obtained in the section Prepare the nodes for upgrade and compare it with output of the above command.

2. Compare the output of Step 1 with the output you captured for node1 in the section Prepare the nodes for upgrade and note any aggregates that were not correctly relocated.
3. Relocate the aggregates left behind on node4:

   ```
   storage aggregate relocation start -node <node4> -aggr <aggr_node_1>
   -destination <node3>
   ```

   Do not use the `-ndo-controller-upgrade` parameter during this relocation.

4. Verify that node3 is now the home owner of the aggregates:

   ```
   storage aggregate show -aggregate <aggr1,aggr2,aggr3…> -fields home-name
   ```

   `<aggr1,aggr2,aggr3…>` is the list of aggregates that had node1 as the original home owner.

   Aggregates that do not have node3 as home owner can be relocated to node3 using the same relocation command in Step 3.

Reboots, panics, or power cycles

The system might crash – reboot, panic or go through a power cycle – during different stages of the upgrade.

The solution to these problems depends on when they occur.

Reboots, panics, or power cycles during the pre-check phase

Node1 or node2 crashes before the pre-check phase with HA pair still enabled

If either node1 or node2 crashes before the pre-check phase, no aggregates have been relocated yet and the HA pair configuration is still enabled.

About this task

Takeover and giveback can proceed normally.

Steps

1. Check the console for EMS messages that the system might have issued and take the recommended corrective action.
2. Continue with the node-pair upgrade procedure.

Reboots, panics, or power cycles during first resource-release phase

Node1 crashes during the first resource-release phase with HA pair still enabled

Some or all aggregates have been relocated from node1 to node2, and HA pair is still enabled. Node2 takes over node1's root volume and any non-root aggregates that were not relocated.

About this task

Ownership of aggregates that were relocated look the same as the ownership of non-root aggregates that were taken over because the home owner has not changed.

When node1 enters the `waiting for giveback` state, node2 gives back all of the node1 non- root aggregates.

Steps

1. After node1 is booted up, all the non-root aggregates of node1 have moved back to node1. You must perform a manual aggregate relocation of the aggregates from node1 to node2:
   `storage aggregate relocation start -node node1 -destination node2 -aggregate -list * - ndocontroller-upgrade true`
2. Continue with the node-pair upgrade procedure.

Node1 crashes during the first resource-release phase while HA pair is disabled

Node2 does not take over but it is still serving data from all non-root aggregates.

Steps

1. Bring up node1.
2. Continue with the node-pair upgrade procedure.

Node2 fails during the first resource-release phase with HA pair still enabled

Node1 has relocated some or all of its aggregates to node2. The HA pair is enabled.

About this task

Node1 takes over all of node2's aggregates as well as any of its own aggregates that it had relocated to node2. When node2 boots up, the aggregate relocation is completed automatically.

Steps

1. Bring up node2.
2. Continue with the node-pair upgrade procedure.

Node2 crashes during the first resource-release phase and after HA pair is disabled

Node1 does not take over.

Steps

1. Bring up node2.

A client outage occurs for all aggregates while node2 is booting up.

2. Continue with the rest of the node-pair upgrade procedure.

Reboots, panics, or power cycles during the first verification phase

Node2 crashes during the first verification phase with HA pair disabled

Node3 does not take over following a node2 crash as the HA pair is already disabled.

Steps

1. Bring up node2.

   A client outage occurs for all aggregates while node2 is booting up.

2. Continue with the node-pair upgrade procedure.

Node3 crashes during the first verification phase with HA pair disabled

Node2 does not take over but it is still serving data from all non-root aggregates.

Steps

1. Bring up node3.
2. Continue with the node-pair upgrade procedure.

Reboots, panics, or power cycles during first resource-regain phase

Node2 crashes during the first resource-regain phase during aggregate relocation

Node2 has relocated some or all of its aggregates from node1 to node3. Node3 serves data from aggregates that were relocated. The HA pair is disabled and hence there is no takeover.

About this task

There is client outage for aggregates that were not relocated. On booting up node2, the aggregates of node1 are relocated to node3.

Steps

1. Bring up node2.
2. Continue with the node-pair upgrade procedure.

Node3 crashes during the first resource-regain phase during aggregate relocation

If node3 crashes while node2 is relocating aggregates to node3, the task continues after node3 boots up.

About this task

Node2 continues to serve remaining aggregates, but aggregates that were already relocated to node3 encounter client outage while node3 is booting up.

Steps

1. Bring up node3.
2. Continue with the controller upgrade.

Reboots, panics, or power cycles during post-check phase

Node2 or node3 crashes during the post-check phase

The HA pair is disabled hence this is no takeover. There is a client outage for aggregates belonging to the node that rebooted.

Steps

1. Bring up the node.
2. Continue with the node-pair upgrade procedure.

Reboots, panics, or power cycles during second resource-release phase

Node3 crashes during the second resource-release phase

If node3 crashes while node2 is relocating aggregates, the task continues after node3 boots up.

About this task

Node2 continues to serve remaining aggregates but aggregates that were already relocated to node3 and node3's own aggregates encounter client outages while node3 is booting.

Steps

1. Bring up node3.
2. Continue with the controller upgrade procedure.

Node2 crashes during the second resource-release phase

If node2 crashes during aggregate relocation, node2 is not taken over.

About this task

Node3 continues to serve the aggregates that have been relocated, but the aggregates owned by node2 encounter client outages.

Steps

1. Bring up node2.
2. Continue with the controller upgrade procedure.

Reboots, panics, or power cycles during the second verification phase

Node3 crashes during the second verification phase

If node3 crashes during this phase, takeover does not happen since HA is already disabled.

About this task

There is an outage for non-root aggregates that were already relocated until node3 reboots.

Steps

1. Bring up node3.

   A client outage occurs for all aggregates while node3 is booting up.

2. Continue with the node-pair upgrade procedure.

Node4 crashes during the second verification phase

If node4 crashes during this phase, takeover does not happen. Node3 serves data from the aggregates.

About this task

There is an outage for non-root aggregates that were already relocated until node4 reboots.

Steps

1. Bring up node4.
2. Continue with the node-pair upgrade procedure.

Issues that can arise in multiple stages of the procedure

Some issues can occur during different stages of the procedure.

Unexpected "storage failover show" command output

During the procedure, if the node that hosts all data aggregates panics or is rebooted accidentally, you might see unexpected output for the `storage failover show` command before and after the reboot, panic, or power cycle.

About this task

You might see unexpected output from the `storage failover show` command in Stage 2, Stage 3, Stage 4, or Stage 5.

The following example shows the expected output of the `storage failover show` command if there are no reboots or panics on the node that hosts all the data aggregates:

```
cluster::> storage failover show

                    Takeover
Node     Partner    Possible  State Description
-------  --------   --------- -----------------
node1    node2      false     Unknown
node2    node1      false     Node owns partner aggregates as part of the
non-disruptive head upgrade procedure. Takeover is not possible: Storage
failover is disabled.
```

The following example shows the output of the `storage failover show` command after a reboot or panic:

```
cluster::> storage failover show

                    Takeover
Node      Partner   Possible  State Description
--------  --------  --------- -----------------
node1     node2     -         Unknown
node2     node1     false     Waiting for node1, Partial giveback, Takeover
is not possible: Storage failover is disabled
```

Although the output says that a node is in partial giveback and that storage failover is disabled, you can disregard this message.

Steps

No action is required; continue with the node-pair upgrade procedure.

LIF migration failure

After you migrate LIFs, they might not come online after migration in Stage 2, Stage 3, or Stage 5.

Steps

1. Verify that the port MTU size is the same as that of the source node.

   For example, if the cluster port MTU size is 9000 on the source node, it should be 9000 on the destination node.

2. Check the physical connectivity of the network cable if the physical state of the port is `down`.

References

When performing the procedures in this content, you might need to consult reference content or go to reference websites.

- Reference content
- Reference sites

Reference content

Content specific to this upgrade are listed in the table below.

Content	Description
Administration overview with the CLI	Describes how to administer ONTAP systems, shows you how to use the CLI interface, how to access the cluster, how to manage nodes, and much more.
Decide whether to use System Manager or the ONTAP CLI for cluster setup	Describes how to set up and configure ONTAP.

Content	Description
Disk and aggregate management with the CLI	Describes how to manage ONTAP physical storage using the CLI. It shows you how to create, expand, and manage aggregates, how to work with Flash Pool aggregates, how to manage disks, and how to manage RAID policies.
Fabric-attached MetroCluster Installation and Configuration	Describes how to install and configure the MetroCluster hardware and software components in a fabric configuration.
FlexArray Virtualization Installation Requirements and Reference	Contains cabling instructions and other information for FlexArray Virtualization systems.
High Availability management	Describes how to install and manage high-availability clustered configurations, including storage failover and takeover/giveback.
Logical storage management with the CLI	Describes how to efficiently manage your logical storage resources, using volumes, FlexClone volumes, files, and LUNs, FlexCache volumes, deduplication, compression, qtrees, and quotas.
MetroCluster Management and Disaster Recovery	Describes how to perform MetroCluster switchover and switchback operations, both in planned maintenance operations, or in the event of a disaster.
MetroCluster Upgrade and Expansion	Provides procedures for upgrading controller and storage models in the MetroCluster configuration, transitioning from a MetroCluster FC to a MetroCluster IP configuration, and expanding the MetroCluster configuration by adding additional nodes.
Network Management	Describes how to configure and manage physical and virtual network ports (VLANs and interface groups), LIFs, routing, and host-resolution services in clusters; optimize network traffic by load balancing; and monitor the cluster by using SNMP.
ONTAP 9.0 Commands: Manual Page Reference	Describes syntax and usage of supported ONTAP 9.0 commands.
ONTAP 9.1 Commands: Manual Page Reference	Describes syntax and usage of supported ONTAP 9.1 commands.
ONTAP 9.2 Commands: Manual Page Reference	Describes syntax and usage of supported ONTAP 9.2 commands.
ONTAP 9.3 Commands: Manual Page Reference	Describes syntax and usage of supported ONTAP 9.3 commands.
ONTAP 9.4 Commands: Manual Page Reference	Describes syntax and usage of supported ONTAP 9.4 commands.
ONTAP 9.5 Commands: Manual Page Reference	Describes syntax and usage of supported ONTAP 9.5 commands.
ONTAP 9.6 Commands: Manual Page Reference	Describes syntax and usage of supported ONTAP 9.6 commands.
ONTAP 9.7 Commands: Manual Page Reference	Describes syntax and usage of supported ONTAP 9.7 commands.

Content	Description
ONTAP 9.8 Commands: Manual Page Reference	Describes syntax and usage of supported ONTAP 9.8 commands.
ONTAP 9.9.1 Commands: Manual Page Reference	Describes syntax and usage of supported ONTAP 9.9.1 commands.
ONTAP 9.10.1 Commands: Manual Page Reference	Describes syntax and usage of supported ONTAP 9.10.1 commands.
SAN management with the CLI	Describes how to configure and manage LUNs, igroups, and targets using the iSCSI and FC protocols, and namespaces and subsystems using the NVMe/FC protocol.
SAN configuration reference	Contains information about FC and iSCSI topologies and wiring schemes.
Upgrade by moving volumes or storage	Describes how to quickly upgrade controller hardware in a cluster by moving storage or volumes. Also describes how to convert a supported model to a disk shelf.
Upgrade ONTAP	Contains instructions for downloading and upgrading ONTAP.
Use "system controller replace" commands to upgrade AFF A700 to AFF A900 running ONTAP 9.10.1 or later	Describes the aggregate relocation procedures needed to non-disruptively upgrade an AFF A700 to an AFF A900 running ONTAP 9.10.1 or later by using "system controller replace" commands.
Use "system controller replace" commands to upgrade controller hardware running ONTAP 9.8 or later	Describes the aggregate relocation procedures needed to non-disruptively upgrade controllers running ONTAP 9.8 by using "system controller replace" commands.
Use aggregate relocation to manually upgrade controller hardware running ONTAP 9.8 or later	Describes the aggregate relocation procedures needed to perform manual non-disruptive controller upgrades running ONTAP 9.8 or later.
Use "system controller replace" commands to upgrade controller hardware running ONTAP 9.5 to ONTAP 9.7	Describes the aggregate relocation procedures needed to non-disruptively upgrade controllers running ONTAP 9.5 to ONTAP 9.7 by using "system controller replace" commands.
Use aggregate relocation to manually upgrade controller hardware running ONTAP 9.7 or earlier	Describes the aggregate relocation procedures needed to perform manual non-disruptive controller upgrades running ONTAP 9.7 or earlier.

Reference sites

The NetApp Support Site also contains documentation about network interface cards (NICs) and other hardware that you might use with your system. It also contains the Hardware Universe, which provides information about the hardware that the new system supports.

Access ONTAP 9 documentation.

Access the Active IQ Config Advisor tool.

Manually upgrade controller hardware running ONTAP 9.7 or earlier

Overview

This procedure describes how to upgrade the controller hardware using aggregate relocation (ARL) for the following system configurations:

Method	ONTAP version	Supported systems
Manual upgrade using ARL	9.7 or earlier	• FAS system to FAS system • FAS system to a system with FlexArray Virtualization Software or a V-Series system • AFF system to AFF system • System with FlexArray Virtualization Software or a V-Series system to a FAS system, provided that the system with FlexArray Virtualization Software or V-Series system has no array LUNs. • V-Series system to a system with FlexArray Virtualization Software or a V-Series system

During the procedure, you upgrade the original controller hardware with the replacement controller hardware, relocating the ownership of non-root aggregates. You migrate aggregates multiple times from node to node to confirm that at least one node is serving data from the aggregates throughout the upgrade procedure. You also migrate data logical interfaces (LIFs) and assign the network ports on the new controller to the interface groups as you proceed.

In this document, the original nodes are called *node1* and *node2*, and the new nodes are called *node3* and *node4*. During the described procedure, node1 is replaced by node3, and node2 is replaced by node4.
The terms *node1*, *node2*, *node3*, and *node4* are used only to distinguish between the original and new nodes. When following the procedure, you must substitute the real names of your original and new nodes. However, in reality, the names of the nodes do not change: node3 has the name node1, and node4 has the name node2 after the controller hardware is upgraded.
This document uses the term *systems with FlexArray Virtualization Software* to refer to systems that belong to these new platforms. It uses the term *V-Series system* to refer to the separate hardware systems that can attach to storage arrays

Important information:

- This procedure is complex and assumes that you have advanced ONTAP administration skills. You also must read and understand the Guidelines for upgrading controllers with ARL and the ARL upgrade workflow sections before beginning the upgrade.
- This procedure assumes that the replacement controller hardware is new and has not been used. The steps required to prepare used controllers with the `wipeconfig` command are not included in this procedure. You must contact technical support if the replacement controller hardware was previously used, especially if the controllers were running Data ONTAP in 7-Mode.
- You can use this procedure to upgrade the controller hardware in clusters with more than two nodes; however, you need to perform the procedure separately for each high-availability (HA) pair in the cluster.

- This procedure applies to FAS systems, V-Series systems, AFF systems, and systems with FlexArray Virtualization Software. FAS systems released after ONTAP 9 can attach to storage arrays if the required license is installed. The existing V-Series systems are supported in ONTAP 9. For information about the storage array and V-Series models, refer to References to link to the *Hardware Universe* and see the *V-Series Support Matrix*.
- This procedure applies to MetroCluster four-node and eight-node configurations running ONTAP 9.5 and earlier. For MetroCluster configurations running ONTAP 9.6 and later, go to References to link to *Using "system controller replace" Commands to Upgrade Controller Hardware Running ONTAP 9.5 to ONTAP 9.7*.

Decide whether to use the aggregate relocation procedure

This content describes how to upgrade the storage controllers in an HA pair with new controllers while keeping all the existing data and disks. This is a complex procedure that should be used only by experienced administrators.

Use this content under the following circumstances:

- You do not want to add the new controllers as a new HA pair to the cluster and migrate the data using volume moves.
- You are experienced in administering ONTAP and are comfortable with the risks of working in the diagnostic privilege mode.
- You have a system that uses Fabric MetroCluster 4-node and 8-node configurations running ONTAP 9.5 or earlier.

You can use NetApp Storage Encryption (NSE) and NetApp Volume Encryption (NVE) with this procedure.

If you prefer a different method of upgrading the controller hardware and are willing to do volume moves, refer to References to link to *Upgrade by moving volumes or storage*.

Refer to References to link to the *ONTAP 9 Documentation Center* where you can access ONTAP 9 product documentation.

ARL upgrade workflow

Before you upgrade the nodes using ARL, you should understand how the procedure works. In this document, the procedure is broken down into several stages.

Upgrade the node pair

To upgrade the node pair, you must prepare the original nodes and then perform a series of steps on both the original and new nodes. You can then decommission the original nodes.

ARL upgrade sequence overview

During the procedure, you upgrade the original controller hardware with the replacement controller hardware, one controller at a time, taking advantage of the HA pair configuration to relocate the ownership of non-root aggregates. All non-root aggregates must undergo two relocations to reach their final destination, which is the correct upgraded node.

Each aggregate has a home owner and current owner. The home owner is the actual owner of the aggregate, and the current owner is the temporary owner.

The following illustration shows the stages of the procedure. The thick, light gray arrows represent the relocation of aggregates and the movement of LIFs, and the thinner black arrows represent the removal of the original nodes. The smaller controller images represent the original nodes, and the larger controller images represent the new nodes.

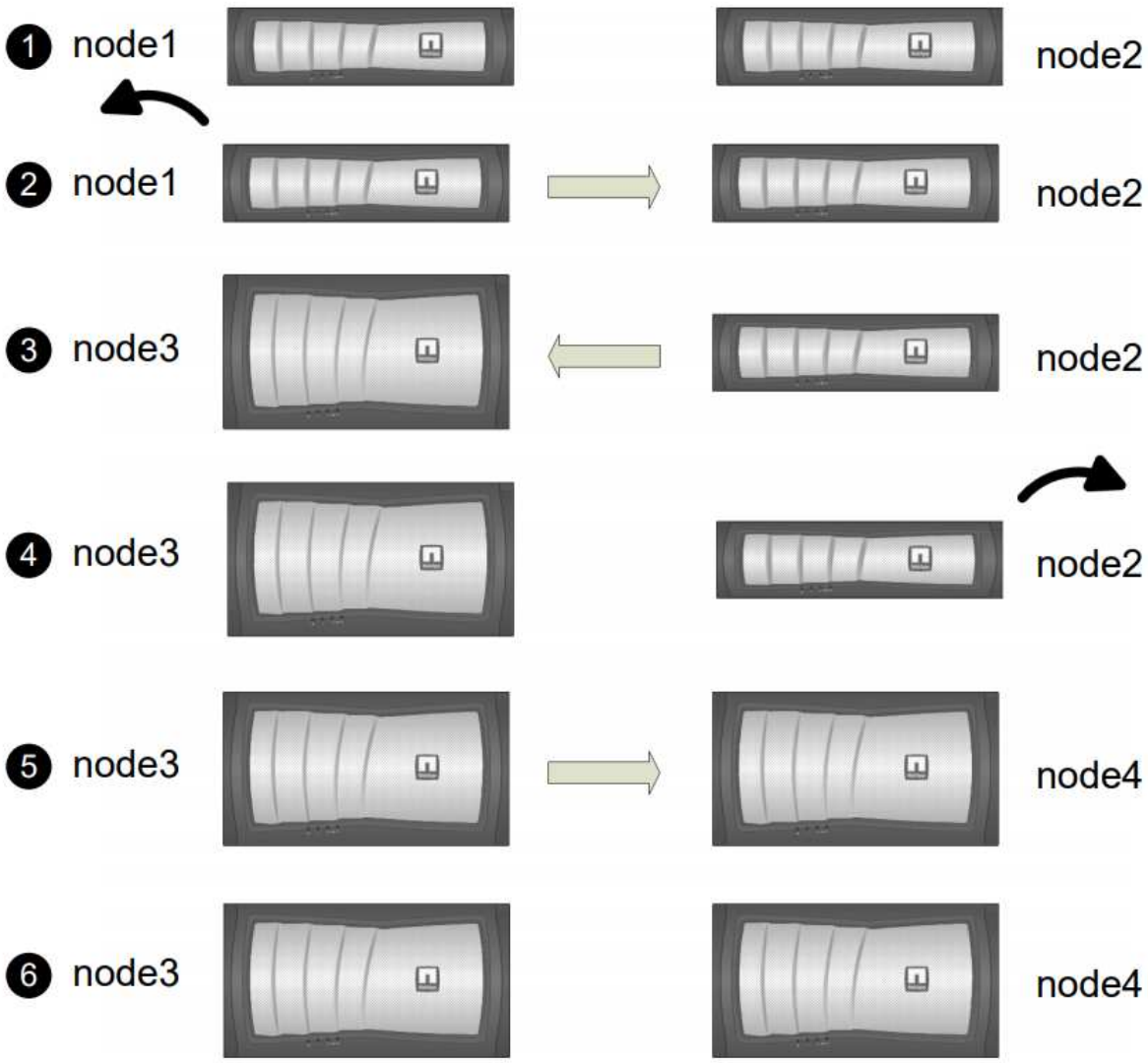

The following table describes the high-level tasks you perform during each stage and the state of aggregate ownership at the end of the stage. Detailed steps are provided later in the procedure:

Stage	Steps
Stage 1: Prepare for upgrade	1. Determine whether the controller has aggregates on internal disk drives. This step is required only if you are upgrading from a controller with internal disk drive. 2. Prepare the nodes for upgrade. 3. Rekey disks for Storage Encryption. This task is required only if you are upgrading from a system with self-encrypting drives. 4. Verify the SnapMirror relationship state on the cluster and quiesce all relationships between the clusters. 5. Prepare for netboot. Aggregate ownership at the end of Stage 1: • Node1 is the home owner and current owner of the node1 aggregates. • Node2 is the home owner and current owner of the node2 aggregates.
Stage 2: Retire node1	1. Relocate non-root aggregates from node1 to node2. 2. Move non-SAN data LIFSs owned by node1 to node2. 3. Record node1 information. 4. Relocate failed or vetoed aggregates. 5. Retire node1. Aggregate ownership at the end of Stage 2: • Node1 is the home owner of node1 aggregates. • Node2 is the current owner of node1 aggregates. • Node2 is the home owner and current owner of node2 aggregates.

Stage	Steps
Stage 3: Install and boot node3	1. Install and boot node3. 2. Set the UTA/UTA2 configuration on node3. 3. Map ports from node1 to node3. 4. Verify the node3 installation. 5. Move non-SAN data LIFs owned by node1 from node2 to node3 and verify SNA LIFs on node3. 6. Relocate non-root aggregates from node2 to node3. 7. Move non-SAN data LIFs owned by node2 to node3. Aggregate ownership at the end of Stage 3: • Node2 is the home owner of node2 aggregates but not the current owner. • Node3 is the home owner and current owner of aggregates originally belonging to node1. • Node2 is the home owner and current owner of aggregates belonging to node2 but not the home owner.
Stage 4: Retire node2	1. Record node2 information. 2. Retire node2. No changes occur in aggregate ownership.
Stage 5: Install and boot node4	1. Install and boot node4. 2. Set the UTA/UTA2 configuration on node4. 3. Map ports from node2 to node4. 4. Verify node4 is successfully installed. 5. Move non-SAN data LIFs owned by node2 from node3 to node4 and verify SNA LIFs on node4. 6. Relocate node2's non-root aggregates from node3 to node4. Aggregate ownership at the end of Stage 5: • Node3 is the home owner and current owner of the aggregates that originally belonged to node1. • Node4 is the home owner and current owner of aggregates that originally belonged to node2.

Stage	Steps
Stage 6: Complete the upgrade	1. Confirm the new controllers are set up correctly. 2. Set up Storage Encryption on the new nodes. This task is required only if you are upgrading to a system with self-encrypting drives. 3. Decommission the old system. 4. Resume NetApp SnapMirror relationships. **Note:** The storage virtual machine (SVM) disaster recovery updates will not be interrupted as per the schedules assigned. No changes occur in aggregate ownership.

Guidelines for upgrading controllers with ARL

To understand whether you can use aggregate relocation (ARL) to upgrade a pair of controllers running ONTAP 9.0 to 9.7 depends on the platform and the configuration of both the original and replacement controllers.

Supported upgrades for ARL

You can upgrade a pair of nodes using ARL under the following circumstances:

- Both the original controllers and the replacement controllers must be running the same version of ONTAP 9.x before the upgrade.
- The replacement controllers must have equal or higher capacity than the original controllers. Equal or higher capacity refers to attributes, such as the NVRAM size, volume, LUN, or aggregate count limits; it also refers to the maximum volume or aggregate sizes of the new nodes.
- You can upgrade the following type of systems:
  - A FAS system to a FAS system.
  - A FAS system to a system with FlexArray Virtualization Software or a V-Series system.
  - An AFF system to an AFF system.
  - A system with FlexArray Virtualization Software or a V-Series system to a FAS system, provided that the system with FlexArray Virtualization Software or V-Series system has no array LUNs.
  - A V-Series system to a system with FlexArray Virtualization Software or a V-Series system.

Before performing an AFF system upgrade, you must upgrade ONTAP to release versions 9.3P12, 9.4P6 or 9.5P1 or later. These release levels are required for a successful upgrade.

- For some ARL controller upgrades you can use temporary cluster ports on the replacement controller for the upgrade. For example, if you upgrade from an AFF A300 to an AFF A400 system, depending on the AFF A400 configuration, you can use any of the two mezzanine ports or add a four-port 10GbE network interface card to provide temporary cluster ports. After you complete a controller upgrade using temporary cluster ports, you can nondisruptively migrate clusters to 100GbE ports on the replacement controller.

- If you are using ONTAP 9.6P11, 9.7P8, or later releases, it is recommended to enable Connectivity, Liveliness, and Availability Monitor (CLAM) takeover to return the cluster into quorum when certain node failures occur. The `kernel-service` command requires advanced privilege level access. For more information, see: NetApp KB Article SU436: CLAM takeover default configuration changed.
- Controller upgrade using ARL is supported on systems configured with SnapLock Enterprise and SnapLock Compliance volumes.

You must verify whether the ARL can be performed on the original and replacement controllers. You must check the size of all defined aggregates and number of disks supported by the original system. Then compare them with the aggregate size and number of disks supported by the new system. To access this information, refer to References to link to the *Hardware Universe*. The aggregate size and the number of disks supported by the new system must be equal to or greater than the aggregate size and number of disks supported by the original system.

You must validate in the cluster mixing rules whether new nodes can become part of the cluster with the existing nodes when the original controller is replaced. For more information about cluster mixing rules, refer to References to link to the *Hardware Universe*.

Both systems are either high-availability (HA) or non-HA. Both nodes must either have the personality enabled or disabled; you cannot combine a node with the All Flash Optimized personality enabled with a node that does not have the personality enabled in the same HA pair. If the personalities are different, contact technical support.

If the new system has fewer slots than the original system, or if it has fewer or different ports, you might need to add an adapter to the new system. Refer to References to link to the *Hardware Universe* on the NetApp Support Site for details about specific platforms.

Upgrades not supported for ARL

You cannot perform the following upgrades:

- To or from controllers that cannot run a version of ONTAP from ONTAP 9.0 to ONTAP 9.7.

  For information on controller upgrades for systems running Data ONTAP operating in 7-Mode, refer to References to link to the *NetApp Support Site*.

- To replacement controllers that do not support the disk shelves connected to the original controllers.

  For disk-support information, refer to References to link to the *Hardware Universe*.

- From controllers with root aggregates or data aggregates on internal drives.

  If you want to upgrade controllers with root aggregates or data aggregates on internal disk drives, refer to References to link to *Upgrade by moving volumes or storage* and go to the procedure *Upgrading a pair of nodes running clustered Data ONTAP by moving volumes*.

  If you want to upgrade ONTAP on nodes in a cluster, refer to References to link to *Upgrade ONTAP*.

Assumptions and terminology

This document is written with the following assumptions:

- The replacement controller hardware is new and has not been used.

> **Attention**: Because this procedure assumes that the replacement controller hardware is new and has not been used, the steps required to prepare used controllers with the `wipeconfig` command are not included in this procedure. You must contact technical support if the replacement controller hardware was previously used, especially if the controllers were running Data ONTAP in 7-Mode.

- You read and understand the guidelines for upgrading the pair of nodes.

> **Attention**: Do not try to clear the NVRAM contents. If you need to clear the contents of NVRAM, contact NetApp technical support.

- You are performing the appropriate command before and after the `modify` commands and comparing the output of both `show` commands to verify that the `modify` command was successful.
- If you have a SAN configuration, you have local and partner LIFs for each storage virtual machine (SVM), on the HA pair. If you do not have local and partner LIFs for each SVM, you should add the SAN data LIF on the remote and local node for that SVM before beginning the upgrade.
- If you have port sets in a SAN configuration, you must have verified that each bound port set contains at least one LIF from each node in the HA pair.

This procedure uses the term *boot environment prompt* to refer to the prompt on a node from which you can perform certain tasks, such as rebooting the node and printing or setting environmental variables. The prompt is sometimes referred to informally as the *boot loader prompt*.

The boot environment prompt is shown in the following example:

```
LOADER>
```

Licensing in ONTAP 9.7 or earlier

When you set up a cluster, the setup wizard prompts you to enter the cluster-base license key. However, some features require additional licenses, which are issued as *packages* that include one or more features. Each node in the cluster must have its own key for each feature to be used in the cluster.

If you do not have new license keys, currently licensed features in the cluster are available to the new controller and will continue to work. However, using unlicensed features on the controller might put you out of compliance with your license agreement, so you must install the new license key or keys for the new controller after the upgrade is complete.

All license keys are 28 uppercase alphabetic characters in length. Refer to References to link to the *NetApp Support Site* where you can obtain new 28-character license keys for ONTAP 9.7. or earlier. The keys are available in the *My Support* section under *Software licenses*. If the site does not have the license keys you need, contact your NetApp sales representative.

For detailed information about licensing, go to References to link to the *System Administration Reference*.

Storage Encryption

The original nodes or the new nodes might be enabled for Storage Encryption. In that case, you must take additional steps in this procedure to verify that Storage Encryption is set up correctly.

If you want to use Storage Encryption, all the disk drives associated with the nodes must have self-encrypting disk drives.

Two-node switchless clusters

If you are upgrading nodes in a two-node switchless cluster, you can leave the nodes in the switchless cluster while performing the upgrade. You do not need to convert them to a switched cluster.

Troubleshooting

This procedure includes troubleshooting suggestions.

If any problems occur while upgrading the controllers, you can refer to the Troubleshoot section at the end of the procedure for more information and possible solutions.

If you do not find a solution to the problem you encountered, contact technical support.

Required tools and documentation

You must have specific tools to install the new hardware, and you need to reference other documents during the upgrade process. You also must record information essential to completing the controller upgrade; a worksheet is provided to record information.

You need the following tools to perform the upgrade:

- Grounding strap
- #2 Phillips screwdriver

Go to the References section to access the list of reference documents required for this upgrade.

Worksheet: Information to collect before and during controller upgrade

You must gather certain information to successfully upgrade the original nodes. The information includes node IDs, port and LIF details, licensing keys, and IP addresses.

You can use the following worksheet to record information for use later in the procedure:

Information needed	When collected	When used	Collected Information
Model, system ID, serial number of original nodes	Stage 1: *Prepare the nodes for the upgrade*	Stage 3: *Install and boot node3* Stage 5: *Install and boot node4* Stage 6: *Decommission the old system*	
Shelf and disk information, flash storage details, memory, NVRAM, and adapter cards on original nodes	Stage 1: *Preparing the nodes for the upgrade*	Throughout the procedure	

Information needed	When collected	When used	Collected Information
Online aggregates and volumes on original nodes	Stage 1: *Prepare the nodes for the upgrade*	Throughout the procedure to verify that aggregates and volumes remain online except during brief relocation	
Output of commands `network port vlan show` and `network port ifgrp show`	Stage 1: *Prepare the nodes for the upgrade*	Stage 3: *Map ports from node1 to node3* Stage 5: *Map ports from node2 to node4*	
(SAN environments only) Default configuration of FC ports	Stage 1: *Prepare the nodes for the upgrade*	When configuring FC ports on the new nodes	
(V-Series systems or systems with FlexArray Virtualization software only) Topology for V-Series systems or systems with FlexArray Virtualization software	Stage 1: *Prepare the nodes for the upgrade*	Stage 3: *Install and boot node3* Stage 5: *Install and boot node4*	
IP address of SPs	Stage 1: *Prepare the nodes for the upgrade*	Stage 6: *Confirm that the new controllers are set up correctly*	
License keys	Stage 1: *Prepare the nodes for the upgrade*	Stage 6: *Confirm that the new controllers are set up correctly*	
IP address for the external key management server	Stage 1: *Rekey disks for Storage Encryption*	Stage 6: *Set up Storage Encryption on the new nodes*	
Name and path of web-accessible directory where you download files to netboot the nodes	Stage 1: *Prepare to netboot*	Stage 3: *Install and boot node3* Stage 5: *Install and boot node4*	
Non-SAN data LIFs owned by node1	Stage 2: *Move nonSAN data LIFs owned by node1 to node2*	Later in the section	
Cluster, intercluster, node-management, cluster-management, and physical ports	Stage 2: *Record node1 information*	Stage 3: *Install and boot node3* Stage 3: *Map ports from node1 to node3*	

Information needed	When collected	When used	Collected Information
Ports on new nodes	Stage 3: *Map ports from node1 to node3*	Later in the section and in the section *Map ports from node2 to node4*	
Available ports and broadcast domains on node3	Stage 3: *Map ports from node1 to node3*	Later in the section	
Non-SAN data LIFs not owned by node2	*Moving non-SAN data LIFs belonging to node1 from node2 to node3 and verifying SAN LIFs on node3*	Later in the section	
Non-SAN data LIFs owned by node2	Stage 3: *Move nonSAN data LIFs owned by node2 to node3*	Later in the section	
Cluster, intercluster, node-management, cluster-management, and physical ports	Stage 4: *Record node2 information*	Stage 5: *Install and booting node4* Stage 5:_ Map ports from node2 to node4_	
Cluster network ports on node4	Stage 5: *Map ports from node2 to node4*	Later in the section	
Available ports and broadcast domains on node4	Stage 5: *Map ports from node2 to node4*	Later in the section	
Private and public SSL certificates for the storage system and private SSL certificates for each key management server	Stage 6: *Set up Storage Encryption on the new nodes*	Later in the section	

Reconfigure the FC switch layout for ONTAP 9.1 or later

Reconfigure the FC switch layout for ONTAP 9.1 or later

If your existing FC switch layout was configured prior to ONTAP 9.1, you must reconfigure the port layout and apply the latest Reference Configuration Files (RCFs). This procedure applies only to MetroCluster FC configurations.

Before you begin

You must identify the FC switches present in the fabric domain.

You need the admin password and access to an FTP or SCP server.

About this task

You must perform this task if your existing FC switch layout was configured prior to ONTAP 9.1 and you are upgrading to a platform model supported in ONTAP 9.1 or later. It is *not* required if you are upgrading from an existing switch layout that was configured for ONTAP 9.1 or later.

This procedure is nondisruptive and takes approximately four hours to complete (excluding rack and stack) when disks are zeroed.

Steps

1. Send a custom AutoSupport message prior to reconfiguring switches
2. Verify the health of the MetroCluster configuration
3. Check for MetroCluster configuration errors
4. Persistently disable the switches
5. Determine the new cabling layout
6. Apply RCF files and recable the switches
7. Persistently enable the switches
8. Verify switchover, healing, and switchback

Send a custom AutoSupport message prior to reconfiguring switches

Before reconfiguring your switches, you must issue an AutoSupport message to notify NetApp technical support that maintenance is underway. Informing technical support that maintenance is underway prevents them from opening a case on the assumption that a disruption has occurred.

About this task

This task must be performed on each MetroCluster site.

Steps

1. Log in to the cluster.
2. Invoke an AutoSupport message indicating the start of the maintenance:

   ```
   system node autosupport invoke -node * -type all -message MAINT=<maintenance-window-in-hours>
   ```

   The `maintenance-window-in-hours` value specifies the length of the maintenance window, with a maximum of 72 hours. If the maintenance is completed before the time has elapsed, you can invoke an AutoSupport message indicating the end of the maintenance period:

   ```
   system node autosupport invoke -node * -type all -message MAINT=end
   ```

3. Repeat these steps on the partner site.

Verify the health of the MetroCluster configuration

You should check the health of the MetroCluster configuration to verify correct operation.

Steps

1. Verify that the MetroCluster components are healthy:

   ```
   metrocluster check run
   ```

```
cluster_A::> metrocluster check run

Last Checked On: 10/1/2017 16:03:37

Component           Result
------------------- ---------
nodes               ok
lifs                ok
config-replication  ok
aggregates          ok
4 entries were displayed.

Command completed. Use the "metrocluster check show -instance" command
or sub-commands in "metrocluster check" directory for detailed results.
To check if the nodes are ready to do a switchover or switchback
operation, run "metrocluster switchover -simulate" or "metrocluster
switchback -simulate", respectively.
```

2. Verify that there are no health alerts:

   ```
   system health alert show
   ```

Check for MetroCluster configuration errors

You can use the Active IQ Config Advisor tool available from the NetApp Support Site to check for common configuration errors.

About this task

Active IQ Config Advisor is a configuration validation and health check tool. You can deploy it at both secure sites and non-secure sites for data collection and system analysis.

Support for Config Advisor is limited, and available only online.

1. Download the Active IQ Config Advisor tool.
2. Run Active IQ Config Advisor, reviewing the output and following its recommendations to address any issues.

Persistenly disable the switches

You must disable the switches in the fabric persistently so that you can modify its configuration.

About this task

You disable the switches by running the commands on the switch command line; the commands used for this are not ONTAP commands.

Step

Persistently disable the switch:

- For Brocade switches, use the `switchCfgPersistentDisable` command.
- For Cisco switches, use the `suspend` command.

The following command disables a Brocade switch persistently:

```
FC_switch_A_1:admin> switchCfgPersistentDisable
```

The following command disables a Cisco switch:

```
vsan [vsna #] suspend
```

Determine the new cabling layout

You must determine the cabling for the new controller modules and any new disk shelves to the existing FC switches.

About this task

This task must be performed at each MetroCluster site.

Step

Use the *Fabric-attached MetroCluster Installation and Configuration* content to determine the cabling layout for your switch type, using the port usage for an eight-node MetroCluster configuration. The FC switch port usage must match the usage described in the content so that the Reference Configuration Files (RCFs) can be used.

Go to References to link to the *Fabric-attached MetroCluster Installation and Configuration* content.

If your environment cannot be cabled in a way that RCFs can be used, contact technical support. Do not use this procedure if the cabling cannot use RCFs.

Apply RCF files and recable the switches

You must apply the appropriate reference configuration files (RCFs) to reconfigure your switches to accommodate the new nodes. After you apply the RCFs, you can recable the switches.

Before you begin

The FC switch port usage must match the usage described in the *Fabric-attached MetroCluster Installation and Configuration* content so that the RCFs can be used. Go to References to link to the *Fabric-attached MetroCluster Installation and Configuration* content.

Steps

1. Go to the MetroCluster RCF downloads page and select the RCFs for your switch configuration.

   You must use the RCFs that match your switch models.

2. Install the FC switch RCFs by selecting the procedure that matches your switch models and following the

installation instructions:

- Install a Brocade FC switch RCF
- Install a Cisco FC switch RCF

3. Verify that the switch configuration is saved.
4. Cable both of the FC-to-SAS bridges to the FC switches, using the cabling layout you created in Determine the new cabling layout.
5. Verify that the ports are online:
   - For Brocade switches, use the `switchshow` command.
   - For Cisco switches, use the show `interface brief` command.
6. Cable the FC-VI ports from the controllers to the switches.
7. From the existing nodes, verify that the FC-VI ports are online:

```
metrocluster interconnect adapter show

metrocluster interconnect mirror show
```

Persistently enable the switches

You must enable the switches in the fabric persistently.

Step

Persistently enable the switch:

- For Brocade switches, use the `switchCfgPersistentenable` command.

```
FC_switch_A_1:admin> switchCfgPersistentenable
```

- For Cisco switches, use the `no suspend` command.

```
vsan [vsna #]no suspend
```

Verify switchover, healing, and switchback

You should verify the switchover, healing, and switchback operations of the MetroCluster configuration.

Step

Refer to References to link to the *MetroCluster Management and Disaster Recovery* content and follow the procedures for negotiated switchover, healing, and switchback.

Stage 1. Prepare for upgrade

Stage 1. Prepare for the upgrade

During Stage 1, you must prepare the nodes for the upgrade and run a series of prechecks. You might need to rekey disks for Storage Encryption. You must also prepare to netboot the new controllers.

Steps

1. Determine whether the controller has aggregates on internal disk drives
2. Prepare the nodes for upgrade
3. Get an IP address of an external key management server for storage encryption
4. Manage authentication using KMIP servers
5. Manage authentication using an onboard key manager
6. Quiesce the SnapMirror relationships
7. Prepare for netboot

Determine whether the controller has aggregates on internal disk drives

If you are upgrading controllers with internal disk drives, you need to complete several commands and examine their output to confirm that none of the internal disk drives contains root aggregates or data aggregates.

About this task

If you are not upgrading controllers with aggregates on internal disk drives, skip this section and go to the section Prepare the nodes for upgrade.

Steps

1. Enter the nodeshell, once for each of the original nodes.

   ```
   system node run -node <node_name>
   ```

2. Display the internal drives:

   ```
   sysconfig -av
   ```

   The system displays detailed information about the node's configuration, including storage, as seen in the partial output shown in the following example:

```
node> sysconfig -av
slot 0: SAS Host Adapter 0a (PMC-Sierra PM8001 rev. C, SAS, UP)
                Firmware rev: 01.11.06.00
                 Base WWN: 5:00a098:0008a3b:b0
                 Phy State: [0] Enabled, 6.0 Gb/s
                            [1] Enabled, 6.0 Gb/s
                            [2] Enabled, 6.0 Gb/s
                            [3] Enabled, 6.0 Gb/s
                ID Vendor Model FW Size
                00.0 : NETAPP X306_HMARK02TSSM NA04 1695.4GB (3907029168
512B/sect)
                00.1 : NETAPP X306_HMARK02TSSM NA04 1695.4GB (3907029168
512B/sect)
                00.2 : NETAPP X306_HMARK02TSSM NA04 1695.4GB (3907029168
512B/sect)
                00.3 : NETAPP X306_HMARK02TSSM NA04 1695.4GB (3907029168
512B/sect)
                00.4 : NETAPP X306_HMARK02TSSM NA04 1695.4GB (3907029168
512B/sect)
                00.5 : NETAPP X306_HMARK02TSSM NA04 1695.4GB (3907029168
512B/sect)
                00.6 : NETAPP X306_HMARK02TSSM NA04 1695.4GB (3907029168
512B/sect)
                00.7 : NETAPP X306_HMARK02TSSM NA04 1695.4GB (3907029168
512B/sect)
                00.8 : NETAPP X306_HMARK02TSSM NA04 1695.4GB (3907029168
512B/sect)
                00.9 : NETAPP X306_HMARK02TSSM NA04 1695.4GB (3907029168
512B/sect)
                00.10: NETAPP X306_HMARK02TSSM NA04 1695.4GB (3907029168
512B/sect)
                00.11: NETAPP X306_HMARK02TSSM NA04 1695.4GB (3907029168
512B/sect)
...
```

3. Examine the storage output of the `sysconfig -av` command to identify the internal disk drives, and then record the information.

   Internal drives have "00." at the beginning of their ID. The "00." indicates an internal disk shelf, and the number after the decimal point indicates the individual disk drive.

4. Enter the following command on both controllers:

   `aggr status -r`

   The system displays the aggregate status of the node, as shown in the partial output in the following example:

```
node> aggr status -r
Aggregate aggr2 (online, raid_dp, parity uninit'd!) (block checksums)
Plex /aggr2/plex0 (online, normal, active)
RAID group /aggr2/plex0/rg0 (normal, block checksums)

RAID Disk Device    HA SHELF BAY CHAN Pool Type RPM  Used (MB/blks)
Phys (MB/blks)
--------- --------- -- ----- --- ---- ---- ---- ---- ------------------
------------------
dparity   0a.00.1   0a   0    1  SA:B  0   BSAS 7200 1695466/3472315904
1695759/3472914816
parity    0a.00.3   0a   0    3  SA:B  0   BSAS 7200 1695466/3472315904
1695759/3472914816
data      0a.00.9   0a   0    9  SA:B  0   BSAS 7200 1695466/3472315904
1695759/3472914816
...
```

The device used to create the aggregate might not be a physical disk but might be a partition.

5. Examine the output of the `aggr status -r` command to identify the aggregates using internal disk drives, and then record the information.

   In the example in the previous step, "aggr2" uses internal drives, as indicated by the shelf ID of "0".

6. Enter the following command on both controllers:

   ```
   aggr status -y
   ```

   The system displays information about the volumes on the aggregate, as shown in the partial output in the following example:

```
node> aggr status -v
...
 aggr2   online   raid_dp, aggr    nosnap=off, raidtype=raid_dp,
raidsize=14,
                  64-bit           raid_lost_write=on,
ignore_inconsistent=off,
                  rlw_on           snapmirrored=off, resyncsnaptime=60,
                                   fs_size_fixed=off,
lost_write_protect=on,
                                   ha_policy=cfo, hybrid_enabled=off,
percent_snapshot_space=0%,
                                   free_space_realloc=off, raid_cv=on,
thorough_scrub=off
         Volumes: vol6, vol5, vol14
...
 aggr0   online   raid_dp, aggr    root, diskroot, nosnap=off,
raidtype=raid_dp,
                  64-bit           raidsize=14, raid_lost_write=on,
ignore_inconsistent=off,
                  rlw_on           snapmirrored=off,  resyncsnaptime=60,
fs_size_fixed=off,
                                   lost_write_protect=on, ha_policy=cfo,
hybrid_enabled=off,
                                   percent_snapshot_space=0%,
free_space_realloc=off, raid_cv=on
         Volumes: vol0
```

Based on the output in Step 4 and Step 6, aggr2 uses three internal drives—"0a.00.1", "0a.00.3", and "0a.00.9"—and the volumes on "aggr2" are "vol6", "vol5", and "vol14". Also, in the output of Step 6, the readout for "aggr0" contains the word "root" at the beginning of the information for the aggregate. That indicates that it contains a root volume.

7. Examine the output of the `aggr status -v` command to identify the volumes belonging to any aggregates that are on an internal drive and whether any of those volumes contain a root volume.
8. Exit the nodeshell by entering the following command on each controller:

   `exit`

9. Take one of the following actions:

If the controllers….	Then…
Do not contain any aggregates on internal disk drives	Continue with this procedure.

If the controllers….	Then…
Contain aggregates but no volumes on the internal disk drives	Continue with this procedure. **Note**: Before you continue, you must place the aggregates offline, and then destroy the aggregates on the internal disk drives. Refer to References to link to the *Disk and aggregate management with the CLI* content for information about managing aggregates.
Contain non-root volumes on the internal drives	Continue with this procedure. **Note**: Before you continue, you must move the volumes to an external disk shelf, place the aggregates offline, and then destroy the aggregates on the internal disk drives. Refer to References to link to the *Disk and aggregate management with the CLI* content for information about moving volumes.
Contain root volumes on the internal drives	Do not continue with this procedure. You can upgrade the controllers by referring to References to link to the *NetApp Support Site* and using the procedure *Upgrading the controller hardware on a pair of nodes running clustered Data ONTAP by moving volumes*.
Contain non-root volumes on the internal drives and you cannot move the volumes to external storage	Do not continue with this procedure. You can upgrade the controllers by using the procedure *Upgrading the controller hardware on a pair of nodes running clustered Data ONTAP by moving volumes*. Refer to References to link to the *NetApp Support Site* where you can access this procedure.

Prepare the nodes for upgrade

Before you can replace the original nodes, you must confirm that they are in an HA pair, have no missing or failed disks, can access each other's storage, and do not own data LIFs assigned to the other nodes in the cluster. You also must collect information about the original nodes and, if the cluster is in a SAN environment, confirm that all the nodes in the cluster are in quorum.

Steps

1. Confirm that each of the original nodes has enough resources to adequately support the workload of both nodes during takeover mode.

   Refer to References to link to *High Availability management* and follow the *Best practices for HA pairs* section. Neither of the original nodes should be running at more than 50 percent utilization; if a node is running at less than 50 percent utilization, it can handle the loads for both nodes during the controller upgrade.

2. Complete the following substeps to create a performance baseline for the original nodes:

   a. Make sure that the diagnostic user account is unlocked.

      Important: The diagnostic user account is intended only for low-level diagnostic purposes and should be used only with guidance from technical support.

Important: For information about unlocking the user accounts, refer to References to link to the *System Administration Reference*.

b. Refer to References to link to the *NetApp Support Site* and download the Performance and Statistics Collector (Perfstat Converged).

The Perfstat Converged tool lets you establish a performance baseline for comparison after the upgrade.

c. Create a performance baseline, following the instructions on the NetApp Support Site.

3. Refer to References to link to the *NetApp Support Site* and open a support case on the NetApp Support Site.

You can use the case to report any issues that might arise during the upgrade.

4. Verify that NVMEM or NVRAM batteries of node3 and node4 are charged, and charge them if they are not.

You must physically check node3 and node4 to see if the NVMEM or NVRAM batteries are charged. For information about the LEDs for the model of node3 and node4, refer to References to link to the *Hardware Universe*.

Attention Do not try to clear the NVRAM contents. If there is a need to clear the contents of NVRAM, contact NetApp technical support.

5. Check the version of ONTAP on node3 and node4.

The new nodes must have the same version of ONTAP 9.x installed on them that is installed on the original nodes. If the new nodes have a different version of ONTAP installed, you must netboot the new controllers after you install them. For instructions on how to upgrade ONTAP, refer to References to link to *Upgrade ONTAP*.

Information about the version of ONTAP on node3 and node4 should be included in the shipping boxes. The ONTAP version is displayed when the node boots up or you can boot the node to maintenance mode and run the command:

```
version
```

6. Check whether you have two or four cluster LIFs on node1 and node2:

```
network interface show -role cluster
```

The system displays any cluster LIFs, as shown in the following example:

```
cluster::> network interface show -role cluster
        Logical    Status     Network          Current  Current Is
Vserver Interface  Admin/Oper Address/Mask     Node     Port    Home
------- ---------- ---------- ---------------- -------- ------- ----
node1
        clus1      up/up      172.17.177.2/24  node1    e0c     true
        clus2      up/up      172.17.177.6/24  node1    e0e     true
node2
        clus1      up/up      172.17.177.3/24  node2    e0c     true
        clus2      up/up      172.17.177.7/24  node2    e0e     true
```

7. If you have two or four cluster LIFs on node1 or node2, make sure that you can ping both cluster LIFs across all the available paths by completing the following substeps:
   a. Enter the advanced privilege level:

      ```
      set -privilege advanced
      ```

      The system displays the following message:

      ```
      Warning: These advanced commands are potentially dangerous; use them
      only when directed to do so by NetApp personnel.
      Do you wish to continue? (y or n):
      ```

   b. Enter `y`.
   c. Ping the nodes and test the connectivity:

      ```
      cluster ping-cluster -node node_name
      ```

      The system displays a message similar to the following example:

```
cluster::*> cluster ping-cluster -node node1
Host is node1
Getting addresses from network interface table...
Local = 10.254.231.102 10.254.91.42
Remote = 10.254.42.25 10.254.16.228
Ping status:
...
Basic connectivity succeeds on 4 path(s) Basic connectivity fails on
0 path(s)
................
Detected 1500 byte MTU on 4 path(s):
Local 10.254.231.102 to Remote 10.254.16.228
Local 10.254.231.102 to Remote 10.254.42.25
Local 10.254.91.42 to Remote 10.254.16.228
Local 10.254.91.42 to Remote 10.254.42.25
Larger than PMTU communication succeeds on 4 path(s)
RPC status:
2 paths up, 0 paths down (tcp check)
2 paths up, 0 paths down (udp check)
```

If the node uses two cluster ports, you should see that it is able to communicate on four paths, as shown in the example.

d. Return to the administrative level privilege:

```
set -privilege admin
```

8. Confirm that node1 and node2 are in an HA pair and verify that the nodes are connected to each other, and that takeover is possible:

```
storage failover show
```

The following example shows the output when the nodes are connected to each other and takeover is possible:

```
cluster::> storage failover show
                              Takeover
Node           Partner        Possible State Description
-------------- -------------- -------- -------------------------------
node1          node2          true     Connected to node2
node2          node1          true     Connected to node1
```

Neither node should be in partial giveback. The following example shows that node1 is in partial giveback:

```
cluster::> storage failover show
                              Takeover
Node           Partner        Possible State Description
-------------- -------------- -------- -------------------------------
node1          node2          true     Connected to node2, Partial
giveback
node2          node1          true     Connected to node1
```

If either node is in partial giveback, use the `storage failover giveback` command to perform the giveback, and then use the `storage failover show-giveback` command to make sure that no aggregates still need to be given back. For detailed information about the commands, refer to References to link to *High Availability management*.

9. Confirm that neither node1 nor node2 owns the aggregates for which it is the current owner (but not the home owner):

   `storage aggregate show -node <node_name> -is-home false -fields owner-name,homename,state`

   If neither node1 nor node2 owns aggregates for which it is the current owner (but not the home owner), the system will return a message similar to the following example:

```
cluster::> storage aggregate show -node node2 -is-home false -fields
owner-name,homename,state
There are no entries matching your query.
```

   The following example shows the output of the command for a node named node2 that is the home owner, but not the current owner, of four aggregates:

```
cluster::> storage aggregate show -node node2 -is-home false
               -fields owner-name,home-name,state

aggregate     home-name    owner-name   state
------------- ------------ ------------ ------
aggr1         node1        node2        online
aggr2         node1        node2        online
aggr3         node1        node2        online
aggr4         node1        node2        online

4 entries were displayed.
```

10. Take one of the following actions:

If the command in Step 9…	Then…
Had blank output	Skip Step 11 and go to Step 12.

If the command in Step 9…	Then…
Had output	Go to Step 11.

11. If either node1 or node2 owns aggregates for which it is the current owner but not the home owner, complete the following substeps:

    a. Return the aggregates currently owned by the partner node to the home owner node:

    ```
    storage failover giveback -ofnode <home_node_name>
    ```

    b. Verify that neither node1 nor node2 still owns aggregates for which it is the current owner (but not the home owner):

    ```
    storage aggregate show -nodes <node_name> -is-home false -fields owner-name,home-name,state
    ```

    The following example shows the output of the command when a node is both the current owner and home owner of aggregates:

    ```
    cluster::> storage aggregate show -nodes node1
              -is-home true -fields owner-name,home-name,state

    aggregate     home-name    owner-name   state
    ------------- ------------ ------------ ------
    aggr1         node1        node1        online
    aggr2         node1        node1        online
    aggr3         node1        node1        online
    aggr4         node1        node1        online

    4 entries were displayed.
    ```

12. Confirm that node1 and node2 can access each other's storage and verify that no disks are missing:

    ```
    storage failover show -fields local-missing-disks,partner-missing-disks
    ```

    The following example shows the output when no disks are missing:

    ```
    cluster::> storage failover show -fields local-missing-disks,partner-
    missing-disks

    node     local-missing-disks partner-missing-disks
    -------- ------------------- ---------------------
    node1    None                None
    node2    None                None
    ```

    If any disks are missing, refer to References to link to *Disk and aggregate management with the CLI*, *Logical storage management with the CLI*, and *High Availability management* to configure storage for the

HA pair.

13. Confirm that node1 and node2 are healthy and eligible to participate in the cluster:

    `cluster show`

    The following example shows the output when both nodes are eligible and healthy:

```
cluster::> cluster show

Node                  Health  Eligibility
--------------------- ------- ------------
node1                 true    true
node2                 true    true
```

14. Set the privilege level to advanced:

    `set -privilege advanced`

15. Confirm that node1 and node2 are running the same ONTAP release:

    `system node image show -node <node1,node2> -iscurrent true`

    The following example shows the output of the command:

```
cluster::*> system node image show -node node1,node2 -iscurrent true

                  Is      Is                Install
Node     Image    Default Current Version   Date
-------- ------- ------- ------- --------- -------------------
node1
         image1  true    true    9.1         2/7/2017 20:22:06
node2
         image1  true    true    9.1         2/7/2017 20:20:48

2 entries were displayed.
```

16. Verify that neither node1 nor node2 owns any data LIFs that belong to other nodes in the cluster and check the `Current Node` and `Is Home` columns in the output:

    `network interface show -role data -is-home false -curr-node <node_name>`

    The following example shows the output when node1 has no LIFs that are home-owned by other nodes in the cluster:

```
cluster::> network interface show -role data -is-home false -curr-node
node1
 There are no entries matching your query.
```

The following example shows the output when node1 owns data LIFs home-owned by the other node:

```
cluster::> network interface show -role data -is-home false -curr-node
node1

            Logical    Status     Network            Current
Current Is
Vserver     Interface  Admin/Oper Address/Mask       Node           Port
Home
----------- ---------- ---------- ------------------ -------------
------- ----
vs0
            data1      up/up      172.18.103.137/24  node1          e0d
false
            data2      up/up      172.18.103.143/24  node1          e0f
false

2 entries were displayed.
```

17. If the output in Step 15 shows that either node1 or node2 owns any data LIFs home-owned by other nodes in the cluster, migrate the data LIFs away from node1 or node2:

    `network interface revert -vserver * -lif *`

    For detailed information about the `network interface revert` command, refer to References to link to the *ONTAP 9 Commands: Manual Page Reference*.

18. Check whether node1 or node2 owns any failed disks:

    `storage disk show -nodelist <node1,node2> -broken`

    If any of the disks have failed, remove them, following instructions in the *Disk and aggregate management with the CLI*. (Refer to References to link to *Disk and aggregate management with the CLI*.)

19. Collect information about node1 and node2 by completing the following substeps and recording the output of each command:

+
NOTE: You will use this information later in the procedure.

a. Record the model, system ID, and serial number of both nodes:

   `system node show -node <node1,node2> -instance`

You will use the information to reassign disks and decommission the original nodes.

b. Enter the following command on both node1 and node2 and record information about the shelves, number of disks in each shelf, flash storage details, memory, NVRAM, and network cards from the output:

```
run -node <node_name> sysconfig
```

You can use the information to identify parts or accessories that you might want to transfer to node3 or node4. If you do not know if the nodes are V-Series systems or have FlexArray Virtualization software, you can learn that also from the output.

c. Enter the following command on both node1 and node2 and record the aggregates that are online on both nodes:

```
storage aggregate show -node <node_name> -state online
```

You can use this information and the information in the following substep to verify that the aggregates and volumes remain online throughout the procedure, except for the brief period when they are offline during relocation.

d. Enter the following command on both node1 and node2 and record the volumes that are offline on both nodes:

```
volume show -node <node_name> -state offline
```

After the upgrade, you will run the command again and compare the output with the output in this step to see if any other volumes have gone offline.

1. Enter the following commands to see if any interface groups or VLANs are configured on node1 or node2:

   ```
   network port ifgrp show
   ```

   ```
   network port vlan show
   ```

   Make note of whether interface groups or VLANs are configured on node1 or node2; you need that information in the next step and later in the procedure.

2. Complete the following substeps on both node1 and node2 to confirm that physical ports can be mapped correctly later in the procedure:

e. Enter the following command to see if there are failover groups on the node other than `clusterwide`:

```
network interface failover-groups show
```

Failover groups are sets of network ports present on the system. Because upgrading the controller hardware can change the location of physical ports, failover groups can be inadvertently changed during the upgrade.

The system displays failover groups on the node, as shown in the following example:

```
cluster::> network interface failover-groups show

Vserver              Group              Targets
-------------------- ------------------ ----------
Cluster              Cluster            node1:e0a, node1:e0b
                                        node2:e0a, node2:e0b

fg_6210_e0c          Default            node1:e0c, node1:e0d
                                        node1:e0e, node2:e0c
                                        node2:e0d, node2:e0e

2 entries were displayed.
```

f. If there are failover groups present other than `clusterwide`, record the failover group names and the ports that belong to the failover groups.

g. Enter the following command to see if there are any VLANs configured on the node:

`network port vlan show -node <node_name>`

VLANs are configured over physical ports. If the physical ports change, then the VLANs will need to be re-created later in the procedure.

The system displays VLANs configured on the node, as shown in the following example:

```
cluster::> network port vlan show

Network Network
Node    VLAN Name Port    VLAN ID MAC Address
------  --------- ------- ------- ------------------
node1   e1b-70    e1b     70      00:15:17:76:7b:69
```

h. If there are VLANs configured on the node, take note of each network port and VLAN ID pairing.

1. Take one of the following actions:

If interface groups or VLANS are…	Then…
On node1 or node2	Complete Step 23 and Step 24.
Not on node1 or node2	Go to Step 24.

2. If you do not know if node1 and node2 are in a SAN or non-SAN environment, enter the following command and examine its output:

`network interface show -vserver <vserver_name> -data-protocol iscsi|fcp`

If neither iSCSI nor FC is configured for the SVM, the command will display a message similar to the

following example:

```
cluster::> network interface show -vserver Vserver8970 -data-protocol
iscsi|fcp
There are no entries matching your query.
```

You can confirm that the node is in a NAS environment by using the `network interface show` command with the `-data-protocol nfs|cifs` parameters.

If either iSCSI or FC is configured for the SVM, the command will display a message similar to the following example:

```
cluster::> network interface show -vserver vs1 -data-protocol
iscsi|fcp

         Logical    Status     Network            Current  Current Is
Vserver  Interface  Admin/Oper Address/Mask       Node     Port
Home
-------- ---------- ---------- ------------------ -------- -------
----
vs1      vs1_lif1   up/down    172.17.176.20/24   node1    0d
true
```

3. Verify that all the nodes in the cluster are in quorum by completing the following substeps:

i. Enter the advanced privilege level:

`set -privilege advanced`

The system displays the following message:

```
Warning: These advanced commands are potentially dangerous; use them
only when directed to do so by NetApp personnel.
Do you wish to continue? (y or n):
```

j. Enter `y`.

k. Verify the cluster service state in the kernel, once for each node:

`cluster kernel-service show`

The system displays a message similar to the following example:

```
cluster::*> cluster kernel-service show

Master        Cluster       Quorum        Availability  Operational
Node          Node          Status        Status        Status
------------- ------------- ------------- ------------- -------------
node1         node1         in-quorum     true          operational
              node2         in-quorum     true          operational

2 entries were displayed.
```

Nodes in a cluster are in quorum when a simple majority of nodes are healthy and can communicate with each other. For more information, refer to References to link to the *System Administration Reference*.

l. Return to the administrative privilege level:

```
set -privilege admin
```

1. Take one of the following actions:

If the cluster…	Then…
Has SAN configured	Go to Step 26.
Does not have SAN configured	Go to Step 29.

2. Verify that there are SAN LIFs on node1 and node2 for each SVM that has either SAN iSCSI or FC service enabled by entering the following command and examining its output:

   ```
   network interface show -data-protocol iscsi|fcp -home-node <node_name>
   ```

   The command displays SAN LIF information for node1 and node2. The following examples show the status in the Status Admin/Oper column as up/up, indicating that SAN iSCSI and FC service are enabled:

```
cluster::> network interface show -data-protocol iscsi|fcp
            Logical    Status     Network                  Current
Current Is
Vserver     Interface  Admin/Oper Address/Mask             Node
Port    Home
----------- ---------- ---------- ------------------       ---------
------- ----
a_vs_iscsi  data1      up/up      10.228.32.190/21         node1
e0a     true
            data2      up/up      10.228.32.192/21         node2
e0a     true

b_vs_fcp    data1      up/up      20:09:00:a0:98:19:9f:b0  node1
0c      true
            data2      up/up      20:0a:00:a0:98:19:9f:b0  node2
0c      true

c_vs_iscsi_fcp data1   up/up      20:0d:00:a0:98:19:9f:b0  node2
0c      true
            data2      up/up      20:0e:00:a0:98:19:9f:b0  node2
0c      true
            data3      up/up      10.228.34.190/21         node2
e0b     true
            data4      up/up      10.228.34.192/21         node2
e0b     true
```

Alternatively, you can view more detailed LIF information by entering the following command:

```
network interface show -instance -data-protocol iscsi|fcp
```

3. Capture the default configuration of any FC ports on the original nodes by entering the following command and recording the output for your systems:

   ```
   ucadmin show
   ```

   The command displays information about all FC ports in the cluster, as shown in the following example:

```
cluster::> ucadmin show

                Current Current   Pending Pending   Admin
Node    Adapter Mode    Type      Mode    Type      Status
------- ------- ------- --------- ------- --------- -----------
node1   0a      fc      initiator -       -         online
node1   0b      fc      initiator -       -         online
node1   0c      fc      initiator -       -         online
node1   0d      fc      initiator -       -         online
node2   0a      fc      initiator -       -         online
node2   0b      fc      initiator -       -         online
node2   0c      fc      initiator -       -         online
node2   0d      fc      initiator -       -         online
8 entries were displayed.
```

You can use the information after the upgrade to set the configuration of FC ports on the new nodes.

4. If you are upgrading a V-Series system or a system with FlexArray Virtualization software, capture information about the topology of the original nodes by entering the following command and recording the output:

   ```
   storage array config show -switch
   ```

   The system displays topology information, as show in the following example:

```
cluster::> storage array config show -switch

      LUN LUN                                    Target Side Initiator
Side Initi-
Node  Grp Cnt Array Name    Array Target Port  Switch Port Switch
Port    ator
----- --- --- ------------- ------------------ -----------
-------------- ------
node1 0   50  I_1818FAStT_1
                            205700a0b84772da   vgbr6510a:5
vgbr6510s164:3  0d
                            206700a0b84772da   vgbr6510a:6
vgbr6510s164:4  2b
                            207600a0b84772da   vgbr6510b:6
vgbr6510s163:1  0c
node2 0   50  I_1818FAStT_1
                            205700a0b84772da   vgbr6510a:5
vgbr6510s164:1  0d
                            206700a0b84772da   vgbr6510a:6
vgbr6510s164:2  2b
                            207600a0b84772da   vgbr6510b:6
vgbr6510s163:3  0c
                            208600a0b84772da   vgbr6510b:5
vgbr6510s163:4  2a
7 entries were displayed.
```

5. Complete the following substeps:

m. Enter the following command on one of the original nodes and record the output:

```
service-processor show -node * -instance
```

The system displays detailed information about the SP on both nodes.

n. Confirm that the SP status is `online`.

o. Confirm that the SP network is configured.

p. Record the IP address and other information about the SP.

You might want to reuse the network parameters of the remote management devices, in this case the SPs, from the original system for the SPs on the new nodes.
For detailed information about the SP, refer to References to link to the *System Administration Reference* and the *ONTAP 9 Commands: Manual Page Reference*.

1. If you want the new nodes to have the same licensed functionality as the original nodes, enter the following command to see the cluster licenses on the original system:

```
system license show -owner *
```

The following example shows the site licenses for cluster1:

```
system license show -owner *
Serial Number: 1-80-000013
Owner: cluster1

Package           Type    Description           Expiration
----------------- ------- --------------------- -----------
Base              site    Cluster Base License  -
NFS               site    NFS License           -
CIFS              site    CIFS License          -
SnapMirror        site    SnapMirror License    -
FlexClone         site    FlexClone License     -
SnapVault         site    SnapVault License     -
6 entries were displayed.
```

2. Obtain new license keys for the new nodes at the *NetApp Support Site*. Refer to References to link to *NetApp Support Site*.

   If the site does not have the license keys you need, contact your NetApp sales representative.

3. Check whether the original system has AutoSupport enabled by entering the following command on each node and examining its output:

   ```
   system node autosupport show -node <node1,node2>
   ```

   The command output shows whether AutoSupport is enabled, as shown in the following example:

   ```
   cluster::> system node autosupport show -node node1,node2

   Node              State     From          To                Mail Hosts
   ----------------- --------- ------------- ----------------  ----------
   node1             enable    Postmaster    admin@netapp.com  mailhost

   node2             enable    Postmaster    -                 mailhost
   2 entries were displayed.
   ```

4. Take one of the following actions:

If the original system…	Then…
Has AutoSupport enabled…	a. Go to Step 34. b. Go to the section Get an IP address of an external key management server for Storage Encryption.

If the original system…	Then…
Does not have AutoSupport enabled…	a. Enable AutoSupport by following the instructions in the *System Administration Reference*. (Refer to References to link to the *System Administration Reference*.) **Note:** AutoSupport is enabled by default when you configure your storage system for the first time. Although you can disable AutoSupport at any time, you should leave it enabled. Enabling AutoSupport can significantly help identify problems and solutions should a problem occur on your storage system. b. Go to the Get an IP address of an external key management server for Storage Encryption section.

5. Verify that AutoSupport is configured with the correct mailhost details and recipient e-mail IDs by entering the following command on both of the original nodes and examining the output:

   ```
   system node autosupport show -node node_name -instance
   ```

   For detailed information about AutoSupport, refer to References to link to the *System Administration Reference* and the *ONTAP 9 Commands: Manual Page Reference*.

6. Send an AutoSupport message to NetApp for node1 by entering the following command:

   ```
   system node autosupport invoke -node node1 -type all -message "Upgrading
   node1 from platform_old to platform_new"
   ```

   Do not send an AutoSupport message to NetApp for node2 at this point; you do so later in the procedure.

7. Verify that the AutoSupport message was sent by entering the following command and examining its output:

   ```
   system node autosupport show -node <node1> -instance
   ```

   The fields `Last Subject Sent:` and `Last Time Sent:` contain the message title of the last message sent and the time the message was sent.

Get an IP address of an external key management server for Storage Encryption

After upgrading, you must immediately configure Storage Encryption and establish a cluster-wide authentication key to replace the previous node-level authentication keys.

Steps

1. Install the necessary client and server secure sockets layer (SSL) certificates required to communicate with key management servers:

   ```
   security certificate install
   ```

2. Configure Storage Encryption on all nodes by using the following command on each node:

```
security key-manager setup
```

3. Add the IP address for each key management server:

```
security key-manager add
```

4. Verify that the same key management servers are configured and available on all nodes in the cluster:

```
security key-manager show -status
```

5. Create a new cluster-wide authentication key:

```
security key-manager create-key
```

6. Make a note of the new authentication key ID.
7. Rekey all self-encrypting drives with the new authentication key:

```
storage encryption disk modify -disk * -data-key-id <authentication_key_id>
```

Manage authentication using KMIP servers

With ONTAP 9.5 and later, you can use Key Management Interoperability Protocol (KMIP) servers to manage authentication keys.

Steps

1. Add a new controller:

```
security key-manager setup -node <new_controller_name>
```

2. Add the key manager:

```
security key-manager -add <key_management_server_ip_address>
```

3. Verify that the key management servers are configured and available to all nodes in the cluster:

```
security key-manager show -status
```

4. Restore the authentication keys from all linked key management servers to the new node:

```
security key-manager restore -node <new_controller_name>
```

5. Rekey all self-encrypting disks with the new authentication key:

```
storage encryption disk modify -disk * [-data-key-id nonMSID AK]
```

6. If you use the Federal Information Processing Standard (FIPS), rekey all self-encrypting disks with the new authentication key:

```
storage encryption disk* modify -disk * [-fips-key-id nonMSID AK]
```

Manage authentication using an onboard key manager

You can use an onboard key manager to manage authentication keys. If you plan to use an onboard key manager (OKM), you must record the passphrase and backup material before the beginning the upgrade.

Steps

1. Verify the key management servers are available to all nodes in the cluster:

   ```
   security key-manager key show
   ```

2. Rekey all self-encrypting disks with the new authentication key:

   ```
   storage encryption disk modify -disk * [-data-key-id nonMSID AK>]
   ```

3. If you use the Federal Information Processing Standard (FIPS), rekey all self-encrypting disks with the new authentication key:

   ```
   storage encryption disk* modify -disk * [-fips-key-id nonMSID AK]
   ```

Quiesce the SnapMirror relationships

Before you netboot the system, you must confirm that all the SnapMirror relationship are quiesced. When a SnapMirror relationship is quiesced, it remains quiesced across reboots and failovers.

Steps

1. Verify the SnapMirror relationship status on the destination cluster:

   ```
   snapmirror show
   ```

   If the status is `Transferring`, you must abort those transfers:
   `snapmirror abort -destination-vserver <vserver name>`

   The abort fails if the SnapMirror relationship is not in the `Transferring` state.

2. Quiesce all relationships between the cluster:

   ```
   snapmirror quiesce -destination-vserver <vserver-name>
   ```

Prepare for netboot

After you physically rack node3 and node4 later in the procedure, you might need to netboot them. The term *netboot* means you are booting from an ONTAP image stored on a remote server. When preparing for netboot, you must put a copy of the ONTAP 9 boot image onto a web server that the system can access.

Before you begin

- Verify that you can access a HTTP server with the system.

- Refer to References to link to the *NetApp Support Site* and download the necessary system files for your platform and the correct version of ONTAP.

About this task

You must netboot the new controllers if they do not have the same version of ONTAP 9 installed on them that is installed on the original controllers. After you install each new controller, you boot the system from the ONTAP 9 image stored on the web server. You can then download the correct files to the boot media device for subsequent system boots.

However, you do not need to netboot the controllers if the same version of ONTAP 9 is installed on them that is installed on the original controllers. If so, you can skip this section and proceed to Stage 3: Install and boot node3.

Steps

1. Access the NetApp Support Site to download the files used for performing the netboot of the system.
2. Download the appropriate ONTAP software from the software download section of the NetApp Support Site and store the `<ontap_version>_image.tgz` file on a web-accessible directory.
3. Change to the web-accessible directory and verify that the files you need are available.

For…	Then…

FAS/AFF8000 series systems	Extract the contents of the `<ontap_version>_image.tgz` file to the target directory:
	
	`tar -zxvf <ontap_version>_image.tgz`
	
	Note: If you are extracting the contents on Windows, use 7-Zip or WinRAR to extract the netboot image.
	
	Your directory listing should contain a netboot folder with a kernel file:
	
	`netboot/kernel`

All other systems	Your directory listing should contain the following file: `<ontap_version>_image.tgz` **Note**: You do not need to extract the contents of the `<ontap_version>_image.tgz` file.

You will use information in the directories in Stage 3.

Stage 2. Relocate and retire node1

Stage 2. Relocate and retire node1

During Stage 2, you relocate the node1 aggregates and LIFs to node2, record node1 information, and then retire node1.

Steps

1. Relocating non-root aggregates and NAS data LIFs owned by node1 to node2
2. Moving NAS data LIFs owned by node1 to node2
3. Recording node1 information
4. Retire node1

Relocate non-root aggregates from node1 to node2

Before you can replace node1 with node3, you must move the non-root aggregates from node1 to node2 by using the storage aggregate relocation command and then verifying the relocation.

Steps

1. Relocate the non-root aggregates by completing the following substeps:
   a. Set the privilege level to advanced:

      ```
      set -privilege advanced
      ```

   b. Enter the following command:

      ```
      storage aggregate relocation start -node <node1> -destination <node2>
      -aggregate-list * -ndo-controller-upgrade true
      ```

   c. When prompted, enter `y`.

      Relocation will occur in the background. It could take anywhere from a few seconds to a couple of minutes to relocate an aggregate. The time includes both client outage and non-outage portions. The command does not relocate any offline or restricted aggregates.

   d. Return to the admin level by entering the following command:

      ```
      set -privilege admin
      ```

2. Check the relocation status by entering the following command on node1:

   ```
   storage aggregate relocation show -node <node1>
   ```

   The output will display `Done` for an aggregate after it has been relocated.

   ⓘ Wait until all non-root aggregates owned by node1 have been relocated to node2 before proceeding to the next step.

3. Take one of the following actions:

If relocation…	Then..
Of all aggregates is successful	Go to Step 4.

If relocation…	Then..

Of any aggregates fails or is vetoed	a. Check the EMS logs for the corrective action.
	b. Perform the corrective action.
	c. Relocate any failed or vetoed aggregates:
	`storage aggregate relocation start -node <node1> - destination <node2> -aggregate-list * -ndo-controller-upgrade true`
	d. When prompted, enter `y`.
	e. Return to the admin level:
	`set -privilege admin`
	If necessary, you can force the relocation using one of the following methods:
	◦ Override veto checks:
	`storage aggregate relocation start -override -vetoes true -ndo-controller-upgrade`
	◦ Override destination checks:
	`storage aggregate relocation start -override -destination-checks true -ndo-controller -upgrade`
	Refer to References to link to the *Disk and aggregate management with the CLI* content and the *ONTAP 9 Commands: Manual Page Reference* for more information about storage aggregate relocation commands.

4. Verify that all the non-root aggregates are online and their state on node2:

`storage aggregate show -node <node2> -state online -root false`

The following example shows that the non-root aggregates on node2 are online:

```
cluster::> storage aggregate show -node node2 state online -root false
Aggregate     Size Available Used% State   #Vols  Nodes            RAID
Status
--------- -------- --------- ----- ------- ------ ----------------
------------
aggr_1
           744.9GB 744.8GB      0% online       5 node2
raid_dp,

normal
aggr_2     825.0GB 825.0GB      0% online       1 node2
raid_dp,

normal
2 entries were displayed.
```

If the aggregates have gone offline or become foreign on node2, bring them online by using the following command on node2, once for each aggregate:

`storage aggregate online -aggregate <aggr_name>`

5. Verify that all the volumes are online on node2 by entering the following command on node2 and examining its output:

   `volume show -node <node2> -state offline`

   If any volumes are offline on node2, bring them online by using the following command on node2, once for each volume:

   `volume online -vserver <vserver-name> -volume <volume-name>`

   The `vserver-name` to use with this command is found in the output of the previous `volume show` command.

6. Enter the following command on node2:

   `storage failover show -node <node2>`

   The output should display the following message:

   ```
   Node owns partner's aggregates as part of the nondisruptive controller
   upgrade procedure.
   ```

7. Verify that node1 does not own any non-root aggregates that are online:

   `storage aggregate show -owner-name <node1> -ha-policy sfo -state online`

   The output should not display any online non-root aggregates, which have already been relocated to

node2.

Move NAS data LIFs owned by node1 to node2

Before you can replace node1 with node3, you must move the NAS data LIFs owned by node1 to node2 if you have a two-node cluster, or to a third node if your cluster has more than two nodes. The method you use depends on whether the cluster is configured for NAS or SAN.

About this task

Remote LIFs handle traffic to SAN LUNs during the upgrade procedure. Moving SAN LIFs is not necessary for cluster or service health during the upgrade. You must verify that the LIFs are healthy and located on appropriate ports after you bring node3 online.

Steps

1. List all the NAS data LIFs hosted on node1 by entering the following command and capturing the output:

   ```
   network interface show -data-protocol nfs|cifs -curr-node <node1>
   ```

   The system displays the NAS data LIFs on node1, as shown in the following example:

   ```
    cluster::> network interface show -data-protocol nfs|cifs -curr-node
   node1

             Logical     Status      Network             Current   Current
   Is
    Vserver  Interface   Admin/Oper  Address/Mask        Node      Port
   Home
    -------- ----------  ----------  ------------------  --------- -------
   ----
    vs0
             a0a         up/down     10.63.0.53/24       node1     a0a
   true
             data1       up/up       10.63.0.50/18       node1     e0c
   true
             rads1       up/up       10.63.0.51/18       node1     e1a
   true
             rads2       up/down     10.63.0.52/24       node1     e1b
   true
    vs1
             lif1        up/up       192.17.176.120/24   node1     e0c
   true
             lif2        up/up       172.17.176.121/24   node1     e1a
   true
   ```

2. Take one of the following actions:

If node1…	Then…
Has interface groups of VLANs configured	Go to Step 3.
Does not have interface groups or VLANs configured	Skip Step 3 and go to Step 4.

Use the `network port vlan show` command to display information about the network ports attached to VLANs, and use the `network port ifgrp show` command to display information about the port interface groups.

3. Take the following steps to migrate any NAS data LIFs hosted on interface groups and VLANs on node1:
   a. Migrate the LIFs hosted on any interface groups and the VLANs on node1 to a port on node2 that is capable of hosting LIFs on the same network as that of the interface groups by entering the following command, once for each LIF:

      ```
      network interface migrate -vserver <Vserver_name> -lif <LIF_name>
      -destination-node <node2> –destination-port <netport|ifgrp>
      ```

   b. Modify the home port and the home node of the LIFs and VLANs in Substep a to the port and node currently hosting the LIFs by entering the following command, once for each LIF:

      ```
      network interface modify -vserver <Vserver_name> -lif <LIF_name> -home-node
      <node2> - home-port <netport|ifgrp>
      ```

4. Take one of the following actions:

If the cluster is configured for…	Then…
NAS	Complete Step 5 through Step 8.
SAN	Disable all the SAN LIFs on the node to take them down for the upgrade: `network interface modify -vserver <Vserver-name> -lif <LIF_name> -home-node <node_to_upgrade> -home-port <netport|ifgrp> -status-admin down`

5. Migrate NAS data LIFs from node1 to node2 by entering the following command, once for each data LIF:

   ```
   network interface migrate -vserver <Vserver-name> -lif <LIF_name> -destination
   -node <node2> -destination-port <data_port>
   ```

6. Enter the following command and examine its output to verify that LIFs have been moved to the correct ports and that the LIFs have the status of up by entering the following command on either node and examining the output:

   ```
   network interface show -curr-node <node2> -data-protocol nfs|cifs
   ```

7. Enter the following command to modify the home node of the migrated LIFs:

   ```
   network interface modify -vserver <Vserver-name> -lif <LIF_name> -home-node
   <node2> -home-port <port_name>
   ```

8. Verify whether the LIF is using the port as its home or current port. If the port is not home or current port then go to Step 9:

```
network interface show -home-node <node2> -home-port <port_name>

network interface show -curr-node <node_name> -curr-port <port_name>
```

9. If the LIFs are using the port as a home port or current port, then modify the LIF to use a different port:

```
network interface migrate -vserver <Vserver-name> -lif <LIF_name>
-destination-node <node_name> -destination-port <port_name>

network interface modify -vserver <Vserver-name> -lif <LIF_name> -home-node
<node_name> -home-port <port_name>
```

10. If the ports currently hosting data LIFs are not going to exist on the new hardware, remove them from the broadcast domain now:

```
network port broadcast-domain remove-ports -ipspace Default -broadcast-domain
Default -ports <node:port>
```

11. If any LIFs are down, set the administrative status of the LIFs to "up" by entering the following command, once for each LIF:

```
network interface modify -vserver <Vserver-name> -lif <LIF_name> -home-node
<nodename> -status-admin up
```

> For MetroCluster configurations, you might not be able to change the broadcast domain of a port because it is associated with a port hosting the LIF of a destination storage virtual machine (SVM). Enter the following command from the corresponding source SVM on the remote site to reallocate the destination LIF to an appropriate port:
> `metrocluster vserver resync -vserver <Vserver_name>`

12. Enter the following command and examine its output to verify that there are no data LIFs remaining on node1:

```
network interface show -curr-node <node1> -role data
```

13. If you have interface groups or VLANs configured, complete the following substeps:
    a. Remove the VLANs from the interface groups by entering the following command:

    ```
    network port vlan delete -node <nodename> -port <ifgrp_name> -vlan-id
    <VLAN_ID>
    ```

    b. Enter the following command and examine its output to see if there are any interface groups configured on the node:

    ```
    network port ifgrp show -node <nodename> -ifgrp <ifgrp_name> -instance
    ```

    The system displays interface group information for the node as shown in the following example:

```
cluster::> network port ifgrp show -node node1 -ifgrp a0a -instance
                  Node: node1
 Interface Group Name: a0a
Distribution Function: ip
        Create Policy: multimode_lacp
          MAC Address: 02:a0:98:17:dc:d4
   Port Participation: partial
        Network Ports: e2c, e2d
             Up Ports: e2c
           Down Ports: e2d
```

c. If any interface groups are configured on the node, record the names of those groups and the ports assigned to them, and then delete the ports by entering the following command, once for each port:

`network port ifgrp remove-port -node <nodename> -ifgrp <ifgrp_name> -port <netport>`

Record node1 information

Before you can shut down and retire node1, you must record information about its cluster network, management, and FC ports as well as its NVRAM System ID. You need that information later in the procedure when you map node1 to node3 and reassign disks.

Steps

1. Enter the following command and capture its output:

   `network route show`

   The system displays output similar to the following example:

```
cluster::> network route show

Vserver         Destination    Gateway      Metric
 -------------- -------------- ----------- -------
 iscsi vserver  0.0.0.0/0      10.10.50.1  20
 node1          0.0.0.0/0      10.10.20.1  10
 ....
 node2          0.0.0.0/0      192.169.1.1 20
```

2. Enter the following command and capture its output:

   `vserver services name-service dns show`

   The system displays output similar to the following example:

```
 cluster::> vserver services name-service dns show
                                                                 Name
 Vserver        State     Domains                               Servers
 -------------- --------- ------------------------------------
---------------
 node 1 2       enabled   alpha.beta.gamma.netapp.com
10.10.60.10,

10.10.60.20
 vs_base1       enabled   alpha.beta.gamma.netapp.com,
10.10.60.10,
                          beta.gamma.netapp.com,
10.10.60.20
 ...
 ...
 vs peer1        enabled  alpha.beta.gamma.netapp.com,
10.10.60.10,
                          gamma.netapp.com
10.10.60.20
```

3. Find the cluster network and node-management ports on node1 by entering the following command on either controller:

   ```
   network interface show -curr-node <node1> -role cluster,intercluster,node-
   mgmt,cluster-mgmt
   ```

   The system displays the cluster, intercluster, node-management, and cluster-management LIFs for the node in the cluster, as shown in the following example:

```
 cluster::> network interface show -curr-node <node1>
            -role cluster,intercluster,node-mgmt,cluster-mgmt

              Logical       Status     Network            Current
Current Is
  Vserver     Interface     Admin/Oper Address/Mask       Node     Port
Home
  ----------- ------------- ---------- ------------------ --------
------- ----
  vserver1
              cluster mgmt   up/up     192.168.x.xxx/24   node1    e0c
true
  node1
              intercluster   up/up     192.168.x.xxx/24   node1    e0e
true
              clus1          up/up     169.254.xx.xx/24   node1    e0a
true
              clus2          up/up     169.254.xx.xx/24   node1    e0b
true
              mgmt1          up/up     192.168.x.xxx/24   node1    e0c
true
 5 entries were displayed.
```

Your system might not have intercluster LIFs.

4. Capture the information in the output of the command in Step 3 to use in the section Map ports from node1 to node3.

   The output information is required to map the new controller ports to the old controller ports.

5. Enter the following command on node1:

   `network port show -node <node1> -type physical`

   The system displays the physical ports on the node as shown in the following example:

```
 sti8080mcc-htp-008::> network port show -node sti8080mcc-htp-008 -type
physical

 Node: sti8080mcc-htp-008

                                                                        Ignore
                                                  Speed(Mbps)  Health   Health
 Port   IPspace  Broadcast Domain Link MTU   Admin/Oper   Status   Status
 ----   -------  ---------------- ---- ----  -----------  -------
-------
 e0M    Default  Mgmt             up   1500  auto/1000    healthy  false
 e0a    Default  Default          up   9000  auto/10000   healthy  false
 e0b    Default  -                up   9000  auto/10000   healthy  false
 e0c    Default  -                down 9000  auto/-       -        false
 e0d    Default  -                down 9000  auto/-       -        false
 e0e    Cluster  Cluster          up   9000  auto/10000   healthy  false
 e0f    Default  -                up   9000  auto/10000   healthy  false
 e0g    Cluster  Cluster          up   9000  auto/10000   healthy  false
 e0h    Default  Default          up   9000  auto/10000   healthy  false
 9 entries were displayed.
```

6. Record the ports and their broadcast domains.

   The broadcast domains will need to be mapped to the new ports on the new controller later in the procedure.

7. Enter the following command on node1:

   `network fcp adapter show -node <node1>`

   The system displays the FC ports on the node, as shown in the following example:

```
 cluster::> fcp adapter show -node <node1>
                      Connection  Host
 Node         Adapter Established Port Address
 ------------ ------- ----------- ------------
 node1
               0a     ptp         11400
 node1
               0c     ptp         11700
 node1
               6a     loop        0
 node1
               6b     loop        0
 4 entries were displayed.
```

8. Record the ports.

   The output information is required to map the new FC ports on the new controller later in the procedure.

9. If you did not do so earlier, check whether there are interface groups or VLANs configured on node1 by entering the following commands:

   ```
   network port ifgrp show

   network port vlan show
   ```

   You will use the information in the section Map ports from node1 to node3.

10. Take one of the following actions:

If you…	Then…
Recorded the NVRAM System ID number in the section Prepare the nodes for the upgrade.	Go on to the next section, Retire node1.
Did not record the NVRAM System ID number in the section Prepare the nodes for the upgrade	Complete Step 11 and Step 12 and then continue to Retire node1.

11. Enter the following command on either controller:

    ```
    system node show -instance -node <node1>
    ```

    The system displays information about node1 as shown in the following example:

    ```
    cluster::> system node show -instance -node <node1>
                                Node: node1
                               Owner:
                            Location: GDl
                               Model: FAS6240
                       Serial Number: 700000484678
                           Asset Tag: -
                              Uptime: 20 days 00:07
                     NVRAM System ID: 1873757983
                           System ID: 1873757983
                              Vendor: NetApp
                              Health: true
                         Eligibility: true
    ```

12. Record the NVRAM System ID number to use in the section Install and boot node3.

Retire node1

To retire node1, you must disable the HA pair with node2, shut node1 down correctly, and remove it from the rack or chassis.

Steps

1. Verify the number of nodes in the cluster:

   `cluster show`

   The system displays the nodes in the cluster, as shown in the following example:

   ```
   cluster::> cluster show
   Node                  Health  Eligibility
   --------------------- ------- ------------
   node1                 true    true
   node2                 true    true
   2 entries were displayed.
   ```

2. Disable storage failover, as applicable:

If the cluster is…	Then…

A two-node cluster	a. Disable cluster high availability by entering the following command on either node:
	
	`cluster ha modify -configured false`
	
	a. Disable storage failover:
	
	`storage failover modify -node <node1> -enabled false`

A cluster with more than two nodes	Disable storage failover: `storage failover modify -node <node1> -enabled false`

3. Verify that storage failover was disabled:

   `storage failover show`

   The following example shows the output of the `storage failover show` command when storage failover has been disabled for a node:

```
 cluster::> storage failover show
                                 Takeover
 Node           Partner         Possible State Description
 -------------- -------------- --------
-------------------------------------
 node1          node2          false    Connected to node2, Takeover
                                        is not possible: Storage
failover is
                                        disabled

 node2          node1          false    Node owns partner's aggregates
as part
                                        of the nondisruptive controller
upgrade
                                        procedure. Takeover is not
possible:
                                        Storage failover is disabled
 2 entries were displayed.
```

4. Verify the data LIF status:

   `network interface show -role data -curr-node <node2> -home-node <node1>`

   Look in the **Status Admin/Oper** column to see if any LIFs are down. If any LIFs are down, consult the Troublehsoot section.

5. Take one of the following actions:

If the cluster is…	Then…
A two-node cluster	Go to Step 6.
A cluster with more than two nodes	Go to Step 8.

6. Access the advanced privilege level on either node:

   `set -privilege advanced`

7. Verify that the cluster HA has been disabled:

   `cluster ha show`

   The system displays the following message:

   ```
   High Availability Configured: false
   ```

   If cluster HA has not been disabled, repeat Step 2.

8. Check whether node1 currently holds epsilon:

   `cluster show`

   Because there is the possibility of a tie in a cluster that has an even number of nodes, one node has an extra fractional voting weight called epsilon. Refer to References to link to the *System Administration Reference* for more information.

   > If you have a four-node cluster, epsilon might be on a node in a different HA pair in the cluster.
   >
   > If you are upgrading a HA pair in a cluster with multiple HA pairs, you must move epsilon to the node of a HA pair not undergoing a controller upgrade. For example, if you are upgrading nodeA/nodeB in a cluster with the HA pair configuration nodeA/nodeB and nodeC/nodeD, you must move epsilon to nodeC or nodeD.

   The following example shows that node1 holds epsilon:

   ```
   cluster::*> cluster show

   Node                  Health  Eligibility  Epsilon
   --------------------- ------- ------------ ------------
   node1                 true    true         true
   node2                 true    true         false
   ```

9. If node1 holds epsilon, then mark epsilon `false` on the node so that it can be transferred to the node2:

   `cluster modify -node <node1> -epsilon false`

10. Transfer epsilon to node2 by marking epsilon `true` on node2:

    `cluster modify -node <node2> -epsilon true`

11. Verify that the change to node2 occurred:

    `cluster show`

    ```
    cluster::*> cluster show
    Node                  Health  Eligibility  Epsilon
    --------------------- ------- ------------ ------------
    node1                 true    true         false
    node2                 true    true         true
    ```

    The epsilon for node2 should now be true and the epsilon for node1 should be false.

12. Verify whether the setup is a two-node switchless cluster:

    `network options switchless-cluster show`

```
cluster::*> network options switchless-cluster show

Enable Switchless Cluster: false/true
```

The value of this command must match the physical state of the system.

13. Return to the admin level:

    ```
    set -privilege admin
    ```

14. Halt node1 from the node1 prompt:

    ```
    system node halt -node <node1>
    ```

    Attention: If node1 is in same chassis as node2, do not power off the chassis by using the power switch or by pulling the power cable. If you do so, node2, which is serving data, will go down.

15. When the system prompts you to confirm that you want to halt the system, enter `y`.

    The node stops at the boot environment prompt.

16. When node1 displays the boot environment prompt, remove it from the chassis or the rack.

    You can decommission node1 after the upgrade is completed. See Decommission the old system.

Stage 3. Install and boot node3

Stage 3. Install and boot node3

During Stage 3, you install and boot node3, map the cluster and node-management ports from node1 to node3, verify the node3 installation, and move data LIFs and SAN LIFs belonging to node1 from node2 to node3. You also relocate all aggregates from node2 to node3, and move the data LIFs and SAN LIFs owned by node2 to node3.

Steps

1. Install and boot node3
2. Set the FC or UTA/UTA2 configuration on node3
3. Map ports from node1 to node3
4. Verify the node3 installation
5. Move NAS data LIFs owned by node1 from node2 to node3 and verify SAN LIFs on node3
6. Relocate non-root aggregates from node2 to node3
7. Move NAS data LIFs owned by node2 to node3

Install and boot node3

You must install node3 in the rack, transfer node1's connections to node3, boot node3,

and install ONTAP. You must also reassign any of node1's spare disks, any disks belonging to the root volume, and any non-root aggregates not relocated to node2 earlier.

About this task

You must netboot node3 if it does not have the same version of ONTAP 9 that is installed on node1. After you install node3, boot it from the ONTAP 9 image stored on the web server. You can then download the correct files to the boot media device for subsequent system boots. See Prepare for netboot.

However, you do not need to netboot node3 if it has the same or a later version of ONTAP 9 that is installed on node1.

Important: If you are upgrading a V-Series system connected to storage arrays or a system with FlexArray Virtualization software that is connected to storage arrays, you need to complete Step 1 through Step 5, leave this section at Step 6 and follow instructions in Configure FC ports on node3 and Check and configure UTA/UTA2 ports on node3 as needed, entering commands in maintenance mode. You must then return to this section and resume with Step 7.
However, if you are upgrading a system with storage disks, you need to complete this entire section and then go to Configure FC ports on node3 and Check and configure UTA/UTA2 ports on node3, entering commands at the cluster prompt.

Steps

1. Make sure that you have rack space for node3.

   If node1 and node2 were in separate chassis, you can put node3 in the same rack location as node1. However, if node1 was in the same chassis with node2, then you need to put node3 into its own rack space, preferably close to the location of node1.

2. Install node3 in the rack, following the *Installation and Setup Instructions* for your node model.

   If you are upgrading to a system with both nodes in the same chassis, install node4 in the chassis as well as node3. If you do not, when you boot node3, the node will behave as if it were in a dual-chassis configuration, and when you boot node4, the interconnect between the nodes will not come up.

3. Cable node3, moving the connections from node1 to node3.

   The following references help you make proper cable connections. Go to References to link to them.

   - *Installation and Setup Instructions* or *FlexArray Virtualization Installation Requirements and Reference* for the node3 platform
   - The appropriate disk shelf procedure
   - The *High Availability management* documentation

   Cable the following connections:

   - Console (remote management port)
   - Cluster ports
   - Data ports
   - Cluster and node management ports
   - Storage

- SAN configurations: iSCSI Ethernet and FC switch ports

> You might not need to move the interconnect card or the cluster interconnect cable connection from node1 to node3 because most platform models have a unique interconnect card model. For the MetroCluster configuration, you need to move the FC-VI cable connections from node1 to node3. If the new host does not have an FC-VI card, you might need to move the FC-VI card.

4. Turn on the power to node3, and then interrupt the boot process by pressing Ctrl-C at the console terminal to access the boot environment prompt.

   If you are upgrading to a system with both nodes in the same chassis, node4 also reboots. However, you can disregard the node4 boot until later.

   > When you boot node3, you might see the following warning message:

   ```
   WARNING: The battery is unfit to retain data during a power outage. This
   is likely because the battery is discharged but could be due to other
   temporary conditions.
   When the battery is ready, the boot process will complete and services
   will be engaged.
   To override this delay, press 'c' followed by 'Enter'
   ```

5. If you see the warning message in Step 4, take the following actions:

   a. Check for any console messages that might indicate a problem other than a low NVRAM battery, and, if necessary, take any required corrective action.

   b. Allow the battery to charge and the boot process to complete.

   > **Attention**: Do not override the delay; failure to allow the battery to charge could result in a loss of data.

6. Take one of the following actions:

If your system…	Then…
Has disks and no back-end storage	Skip Step 7 through Step 12 and go to Step 13.
Is a V-Series system or a system with FlexArray Virtualization software connected to storage arrays	a. Go to Set the FC or UTA/UTA2 configuration on node3 and complete the subsections Configure FC ports on node3 and Check and configure UTA/UTA2 ports on node3, as appropriate to your system. b. Return to this section and complete the remaining steps, beginning with Step 7. **Important**: You must reconfigure FC onboard ports, CNA onboard ports, and CNA cards before you boot ONTAP on the V-Series or system with FlexArray Virtualization software.

7. Add the FC initiator ports of the new node to the switch zones.

   If your system has a tape SAN, then you need zoning for the initiators. See your storage array and zoning documentation for instructions.

8. Add the FC initiator ports to the storage array as new hosts, mapping the array LUNs to the new hosts.

   See your storage array and zoning documentation for instructions.

9. Modify the World Wide Port Name (WWPN) values in the host or volume groups associated with array LUNs on the storage array.

   Installing a new controller module changes the WWPN values associated with each onboard FC port.

10. If your configuration uses switch-based zoning, adjust the zoning to reflect the new WWPN values.
11. Verify that the array LUNs are now visible to node3:

    ```
    sysconfig -v
    ```

    The system displays all the array LUNs visible to each of the FC initiator ports. If the array LUNs are not visible, you will not be able to reassign disks from node1 to node3 later in this section.

12. Press Ctrl-C to display the boot menu and select maintenance mode.
13. At the Maintenance mode prompt, enter the following command:

    ```
    halt
    ```

    The system stops at the boot environment prompt.

14. Take one of the following actions:

If the system you are upgrading to is in a…	Then…
Dual-chassis configuration (with controllers in different chassis)	Go to Step 15.
Single-chassis configuration (with controllers in the same chassis)	a. Switch the console cable from node3 to node4. b. Turn on the power to node4, and then interrupt the boot process by pressing Ctrl-C at the console terminal to access the boot environment prompt. The power should already be on if both controllers are in the same chassis. **Note**: Leave node4 at the boot environment prompt; you will return to node4 in Install and boot node4. c. If you see the warning message displayed in Step 4, follow the instructions in Step 5 d. Switch the console cable back from node4 to node3. e. Go to Step 15.

15. Configure node3 for ONTAP:

```
set-defaults
```

16. If NetApp Storage Encryption (NSE) is in use on this configuration, the `setenv bootarg.storageencryption.support` command must be set to `true`, and the `kmip.init.maxwait` variable needs to be set to `off` to avoid a boot loop after the node1 configuration is loaded:

```
setenv bootarg.storageencryption.support true

setenv kmip.init.maxwait off
```

17. If the version of ONTAP installed on node3 is the same or later than the version of ONTAP 9 installed on node1, list and reassign disks to the new node3:

```
boot_ontap
```

> **Warning**: If this new node has ever been used in any other cluster or HA pair, you must run `wipeconfig` before proceeding. Failure to do so might result in service outages or data loss. Contact technical support if the replacement controller was previously used, especially if the controllers were
> running ONTAP running in 7-Mode.

18. Press CTRL-C to display the boot menu.
19. Take one of the following actions:

If the system you are upgrading…	Then…
Does *not* have the correct or current ONTAP version on node3	Go to Step 20.
Has the correct or current version of ONTAP on node3	Go to Step 25.

20. Configure the netboot connection by choosing one of the following actions.

> You must use the management port and IP as the netboot connection. Do not use a data LIF IP or else a data outage might occur while the upgrade is being performed.

If Dynamic Host Configuration Protocol (DHCP) is…	Then…
Running	Configure the connection automatically by entering the following command at the boot environment prompt: `ifconfig e0M -auto`

If Dynamic Host Configuration Protocol (DHCP) is…	Then…
Not running	Manually configure the connection by entering the following command at the boot environment prompt: `ifconfig e0M -addr=<filer_addr> -mask=<netmask> -gw=<gateway> -dns=<dns_addr> domain=<dns_domain>` `<filer_addr>` is the IP address of the storage system. `<netmask>` is the network mask of the storage system. `<gateway>` is the gateway for the storage system. `<dns_addr>` is the IP address of a name server on your network. `<dns_domain>` is the Domain Name Service (DNS) domain name. If you use this optional parameter, you do not need a fully qualified domain name in the netboot server URL; you need only the server's host name. **Note**: Other parameters might be necessary for your interface. Enter `help ifconfig` at the firmware prompt for details.

21. Perform netboot on node3:

For…	Then…
FAS/AFF8000 series systems	`netboot http://<web_server_ip>/<path_to_webaccessible_directory>/netboot/kernel`
All other systems	`netboot http://<web_server_ip>/<path_to_webaccessible_directory>/<ontap_version>_image.tgz`

The `<path_to_the_web-accessible_directory>` leads to where you downloaded the `<ontap_version>_image.tgz` in Step 1 in the section *Prepare for netboot*.

Do not interrupt the boot.

22. From the boot menu, select option **(7) Install new software** first.

This menu option downloads and installs the new ONTAP image to the boot device.

Disregard the following message:

```
This procedure is not supported for Non-Disruptive Upgrade on an HA
pair.
```

The note applies to nondisruptive upgrades of ONTAP, and not upgrades of controllers.

> Always use netboot to update the new node to the desired image. If you use another method to install the image on the new controller, the wrong image might install. This issue applies to all releases of ONTAP.

23. If you are prompted to continue the procedure, enter `y`, and when prompted for the package, enter the following URL:

    `http://<web_server_ip>/<path_to_web-accessible_directory>/<ontap_version_image>.tgz`

24. Complete the following substeps:

    a. Enter `n` to skip the backup recovery when you see the following prompt:

    ```
    Do you want to restore the backup configuration now? {y|n}
    ```

    b. Reboot by entering `y` when you see the following prompt:

    ```
    The node must be rebooted to start using the newly installed
    software. Do you want to reboot now? {y|n}
    ```

    The controller module reboots but stops at the boot menu because the boot device was reformatted and the configuration data needs to be restored.

25. Select **(5) Maintenance mode boot** by entering `5`, and then enter `y` when prompted to continue with the boot.

26. Before continuing, go to Set the FC or UTA/UTA2 configuration on node3 to make any necessary changes to the FC or UTA/UTA2 ports on the node.

    Make the changes recommended in those sections, reboot the node, and go into maintenance mode.

27. Find the system ID of node3:

    `disk show -a`

    The system displays the system ID of the node and information about its disks, as shown in the following example:

```
 *> disk show -a
 Local System ID: 536881109
 DISK     OWNER                    POOL   SERIAL    HOME          DR
 HOME                                     NUMBER
 -------- -------------            -----  -------- -------------
-------------
 0b.02.23 nst-fas2520-2(536880939) Pool0  KPG2RK6F nst-fas2520-
2(536880939)
 0b.02.13 nst-fas2520-2(536880939) Pool0  KPG3DE4F nst-fas2520-
2(536880939)
 0b.01.13 nst-fas2520-2(536880939) Pool0  PPG4KLAA nst-fas2520-
2(536880939)
 ......
 0a.00.0               (536881109) Pool0  YFKSX6JG
(536881109)
 ......
```

You might see the message `disk show: No disks match option -a.` after entering the command. This is not an error message so you can continue with the procedure.

28. Reassign node1's spares, any disks belonging to the root, and any non-root aggregates that were not relocated to node2 earlier in Relocate non-root aggregates from node1 to node2.

Enter the appropriate form of the `disk reassign` command based on whether your system has shared disks:

If disk type is…	Then run the command…
With shared disks	`disk reassign -s <node1_sysid> -d <node3_sysid> -p <node2_sysid>`
Without shared disks	`disk reassign -s <node1_sysid> -d <node3_sysid>`

For the `<node1_sysid>` value, use the information captured in Record node1 information. To obtain the value for `<node3_sysid>`, use the `sysconfig` command.

The `-p` option is only required in maintenance mode when shared disks are present.

The `disk reassign` command reassigns only those disks for which `<node1_sysid>` is the current owner.

The system displays the following message:

```
Partner node must not be in Takeover mode during disk reassignment from
maintenance mode.
Serious problems could result!!
Do not proceed with reassignment if the partner is in takeover mode.
Abort reassignment (y/n)?
```

29. Enter `n`.

The system displays the following message:

```
After the node becomes operational, you must perform a takeover and
giveback of the HA partner node to ensure disk reassignment is
successful.
Do you want to continue (y/n)?
```

30. Enter `y`

The system displays the following message:

```
Disk ownership will be updated on all disks previously belonging to
Filer with sysid <sysid>.
Do you want to continue (y/n)?
```

31. Enter `y`.

32. If you are upgrading from a system with external disks to a system that supports internal and external disks (AFF A800 systems, for example), set the node1 aggregate as root to confirm that node3 boots from the root aggregate of node1.

> **Warning**: You must perform the following substeps in the exact order shown; failure to do so might cause an outage or even data loss.

The following procedure sets node3 to boot from the root aggregate of node1:

a. Check the RAID, plex, and checksum information for the node1 aggregate:

```
aggr status -r
```

b. Check the status of the node1 aggregate:

```
aggr status
```

c. Bring the node1 aggregate online, if necessary:

```
aggr_online <root_aggr_from_node1>
```

d. Prevent the node3 from booting from its original root aggregate:

```
aggr offline <root_aggr_on_node3>
```

e. Set the node1 root aggregate as the new root aggregate for node3:

```
aggr options <aggr_from_node1> root
```

f. Verify that the root aggregate of node3 is offline and the root aggregate for the disks brought over from node1 is online and set to root:

```
aggr status
```

> Failing to perform the previous substep might cause node3 to boot from the internal root aggregate, or it might cause the system to assume a new cluster configuration exists or prompt you to identify one.

The following shows an example of the command output:

```
-------------------------------------------------------------
     Aggr State               Status          Options
aggr0_nst_fas8080_15 online   raid_dp, aggr   root, nosnap=on
                              fast zeroed
                              64-bit

  aggr0 offline               raid_dp, aggr   diskroot
                              fast zeroed
                              64-bit
-------------------------------------------------------------
```

33. Verify that the controller and chassis are configured as `ha`:

```
ha-config show
```

The following example shows the output of the ha-config show command:

```
*> ha-config show
   Chassis HA configuration: ha
   Controller HA configuration: ha
```

Systems record in a programmable ROM (PROM) whether they are in an HA pair or stand-alone configuration. The state must be the same on all components within the stand-alone system or HA pair.

If the controller and chassis are not configured as "ha", use the following commands to correct the configuration:

```
ha-config modify controller ha

ha-config modify chassis ha
```

If you have a MetroCluster configuration, use the following commands to modify the controller and chassis:

```
ha-config modify controller mcc

ha-config modify chassis mcc
```

34. Destroy the mailboxes on node3:

```
mailbox destroy local
```

The console displays the following message:

```
Destroying mailboxes forces a node to create new empty mailboxes, which
clears any takeover state, removes all knowledge of out-of-date plexes
of mirrored volumes, and will prevent management services from going
online in 2-node cluster HA configurations. Are you sure you want to
destroy the local mailboxes?
```

35. Enter `y` at the prompt to confirm that you want to destroy the local mailboxes.
36. Exit maintenance mode:

```
halt
```

The system stops at the boot environment prompt.

37. On node2, check the system date, time, and time zone:

```
date
```

38. On node3, check the date at the boot environment prompt:

```
show date
```

39. If necessary, set the date on node3:

```
set date <mm/dd/yyyy>
```

40. On node3, check the time at the boot environment prompt:

```
show time
```

41. If necessary, set the time on node3:

```
set time <hh:mm:ss>
```

42. Verify the partner system ID is set correctly as noted in Step 28 under -p switch:

```
printenv partner-sysid
```

43. If necessary, set the partner system ID on node3:

```
setenv partner-sysid <node2_sysid>
```

Save the settings:

```
saveenv
```

44. Access the boot menu at the boot environment prompt:

```
boot_ontap menu
```

45. At the boot menu, select option **(6) Update flash from backup config** by entering `6` at the prompt.

The system displays the following message:

```
This will replace all flash-based configuration with the last backup to
disks. Are you sure you want to continue?:
```

46. Enter `y` at the prompt.

The boot proceeds normally, and the system then asks you to confirm the system ID mismatch.

ⓘ The system might reboot twice before displaying the mismatch warning.

47. Confirm the mismatch as shown in the following example:

```
WARNING: System id mismatch. This usually occurs when replacing CF or
NVRAM cards!
Override system id (y|n) ? [n] y
```

The node might go through one round of reboot before booting normally.

48. Log in to node3.

Set the FC or UTA/UTA2 configuration on node3

If node3 has onboard FC ports, onboard unified target adapter (UTA/UTA2) ports, or a UTA/UTA2 card, you must configure the settings before completing the rest of the procedure.

About this task

You might need to complete Configure FC ports on node3, or Check and configure UTA/UTA2 ports on node3, or both sections.

ⓘ NetApp marketing materials might use the term "UTA2" to refer to CNA adapters and ports. However, the CLI uses the term "CNA".

- If node3 does not have onboard FC ports, onboard UTA/UTA2 ports, or a UTA/UTA2 card, and you are upgrading a system with storage disks, you can skip to the Map ports from node1 to node3.
- However, if you have a V-Series system or a system with FlexArray Virtualization software with storage arrays, and node3 does not have onboard FC ports, onboard UTA/UTA ports, or a UTA/UTA2 card, return

to *Install and boot node3* and resume at Step 22.

Choices:

- Configure FC ports on node3
- Check and configure UTA/UTA2 ports on node3

Configure FC ports on node3

If node3 has FC ports, either onboard or on an FC adapter, you must set port configurations on the node before you bring it into service because the ports are not preconfigured. If the ports are not configured, you might experience a disruption in service.

Before you begin

You must have the values of the FC port settings from node1 that you saved in Prepare the nodes for upgrade.

About this task

You can skip this section if your system does not have FC configurations. If your system has onboard UTA/UTA2 ports or a UTA/UTA2 card, you configure them in Check and configure UTA/UTA2 ports on node3.

Important: If your system has storage disks, enter the commands in this section at the cluster prompt. If you have a V-Series system or have FlexArray Virtualization Software and are connected to storage arrays, enter commands in this section in maintenance mode.

Steps

1. Take one of the following actions:

If the system that you are upgrading…	Then…
Has storage disks	Go to Step 5
Is a V-Series system or has FlexArray Virtualization Software and is connected to storage arrays	Go to Step 2

2. Boot node3 and access maintenance mode:

```
boot_ontap maint
```

3. Take one of the following actions:

If the system that you are upgrading…	Then…
Has storage disks	Enter the following command: `system node hardware unified-connect show`
Is a V-series system or has FlexArray Virtualization Software and is connected to storage arrays.	Enter the following command `ucadmin show`

The system displays information about all FC and converged network adapters on the system.

4. Compare the FC settings of node3 with the settings that you captured earlier from node1.
5. Take one of the following actions:

If the default FC settings on the new nodes are…	Then…
The same as the ones you that captured on node1	Go to Step 11.
Different from the ones that you captured on node1	Go to Step 6.

6. Take one of the following actions:

If the system that you are upgrading…	Then…

Has storage disks	Modify the FC ports on node3 as needed by entering one of the following commands:
	• To program target ports:
	`system node hardware unified-connect modify -type | -t target -adapter <port_name>`
	• To program initiator ports:
	`system node hardware unified-connect modify -type | -t initiator -adapter <port_name>`
	`-t` is the FC4 type: target or initiator.

Is a V-Series system or has FlexArray Virtualization Software and is connected to storage arrays	Modify the FC ports on node3 as needed by entering the following command: `ucadmin modify -m fc -t initiator -f <adapter_port_name>` `-t` is the FC4 type, target or initiator. **Note**: The FC ports must be programmed as initiators.

7. Take one of the following actions:

If the system that you are upgrading…	Then…
Has storage disks	Verify the new settings by entering the following command and examining the output: `system node hardware unified-connect show`
Is a V-Series system or has FlexArray Virtualization Software and is connected to storage arrays	Verify the new settings by entering the following command and examining the output: `ucadmin show`

8. Exit maintenance mode by entering the following command:

```
halt
```

9. After you enter the command, wait until the system stops at the boot environment prompt.
10. Take one of the following actions:

If the system you are upgrading…	Then…
Is a V-Series system or has FlexArray Virtualization software running clustered Data ONTAP 8.3	Boot node3 and access maintenance at the boot environment prompt: `boot_ontap maint`
Is not a V-Series system or does not have FlexArray Virtualization software	Boot node3 at the boot environment prompt: `boot_ontap`

11. Take one of the following actions:

If the system that you are upgrading…	Then…
Has storage disks	• If node3 has a UTA/UTA2 card or UTA/UTA2 onboard ports, go to Check and configure UTA/UTA2 ports on node3. • If node3 does not have a UTA/UTA2 card or UTA/UTA2 onboard ports, skip Check and configure UTA/UTA2 ports on node3 and go to Map ports from node1 to node3.
Is a V-Series system or has FlexArray Virtualization Software and is connected to storage arrays	• If node3 has a card or onboard ports, go to Check and configure UTA/UTA2 ports on node3. • If node3 does not have a card or onboard ports, skip Check and configure UTA/UTA2 ports on node3, and return to *Install and boot node3* and resume at Step 7.

Check and configure UTA/UTA2 ports on node3

If node3 has onboard UTA/UTA2 ports or a UTA/UTA2 card, you must check the configuration of the ports and possibly reconfigure them, depending on how you want to use the upgraded system.

Before you begin

You must have the correct SFP+ modules for the UTA/UTA2 ports.

About this task

If you want to use a Unified Target Adapter (UTA/UTA2) port for FC, you must first verify how the port is configured.

NetApp marketing materials might use the term UTA2 to refer to CNA adapters and ports. However, the CLI uses the term CNA.

You can use the `ucadmin show` command to verify the current port configuration:

```
*> ucadmin show
          Current  Current    Pending  Pending    Admin
 Adapter  Mode     Type       Mode     Type       Status
 -------  -------  ---------  -------  ---------  -----------
 0e       fc       target     -        initiator  offline
 0f       fc       target     -        initiator  offline
 0g       fc       target     -        initiator  offline
 0h       fc       target     -        initiator  offline
 1a       fc       target     -        -          online
 1b       fc       target     -        -          online
6 entries were displayed.
```

UTA/UTA2 ports can be configured into native FC mode or UTA/UTA2 mode. FC mode supports FC initiator and FC target; UTA/UTA2 mode enables concurrent NIC and FCoE traffic sharing the same 10GbE SFP+ interface and supports FC targets.

UTA/UTA2 ports might be found on an adapter or on the controller, and have the following configurations, but you should check the configuration of the UTA/UTA2 ports on the node3 and change it, if necessary:

- UTA/UTA2 cards ordered when the controller is ordered are configured before shipment to have the personality you request.
- UTA/UTA2 cards ordered separately from the controller are shipped with the default FC target personality.
- Onboard UTA/UTA2 ports on new controllers are configured before shipment to have the personality you request.

Attention: If your system has storage disks, you must enter the commands in this section at the cluster prompt unless directed to enter maintenance mode. If you have a VSeries system or have FlexArray Virtualization Software and are connected to storage arrays, you must enter commands in this section at the maintenance mode prompt. You must be in maintenance mode to configure UTA/UTA2 ports.

Steps

1. Check how the ports are currently configured entering on of the following commands on node3:

If the system…	Then…
Has storage disks	`system node hardware unified-connect show`
Is a V-Series system or has FlexArray Virtualization Software and is connected to storage arrays	`ucadmin show`

The system displays output similar to the following examples:

```
cluster1::> system node hardware unified-connect show

                Current  Current    Pending  Pending  Admin
Node  Adapter   Mode     Type       Mode     Type     Status
----  -------   -------  ---------  -------  -------  ------
f-a   0e        fc       initiator  -        -        online
f-a   0f        fc       initiator  -        -        online
f-a   0g        cna      target     -        -        online
f-a   0h        cna      target     -        -        online
f-b   0e        fc       initiator  -        -        online
f-b   0f        fc       initiator  -        -        online
f-b   0g        cna      target     -        -        online
f-b   0h        cna      target     -        -        online
12 entries were displayed.
```

```
*> ucadmin show
         Current  Current    Pending  Pending  Admin
Adapter  Mode     Type       Mode     Type     Status
-------  -------  ---------  -------  -------  ------
0e       fc       initiator  -        -        online
0f       fc       initiator  -        -        online
0g       cna      target     -        -        online
0h       cna      target     -        -        online
0e       fc       initiator  -        -        online
0f       fc       initiator  -        -        online
0g       cna      target     -        -        online
0h       cna      target     -        -        online
*>
```

2. If the current SFP+ module does not match the desired use, replace it with the correct SFP+ module.

   Contact your NetApp representative to obtain the correct SFP+ module.

3. Examine the output of the `system node hardware unified-connect show` or `ucadmin show` command to determine whether the UTA/UTA2 ports have the personality you want.

4. Take one of the following actions:

If the UTA/UTA2 ports…	Then…
Do not have the personality that you want	Go to Step 5.
Have the personality that you want	Skip Step 5 through Step 12 and go to Step 13.

5. Take one of the following actions:

If the system…	Then…
Has storage disks and is running clustered Data ONTAP 8.3	Boot node3 and enter maintenance mode: `boot_ontap maint`
Is a V-Series system or has FlexArray Virtualization Software and is connected to storage arrays	Go to Step 6. You should already be in maintenance mode.

6. Take one of the following actions:

If you are configuring…	Then…
Ports on a UTA/UTA2 card	Go to Step 7.
Onboard UTA/UTA2 ports	Skip Step 7 and go to Step 8.

7. If the adapter is in initiator mode, and if the UTA/UTA2 port is online, take the UTA/UTA2 port offline:

   `storage disable adapter <adapter_name>`

   Adapters in target mode are automatically offline in maintenance mode.

8. If the current configuration does not match the desired use, change the configuration as needed:

   `ucadmin modify -m fc|cna -t initiator|target <adapter_name>`

   - `-m` is the personality mode, `fc` or `cna`.
   - `-t` is the FC4 type, `target` or `initiator`.

   > You need to use the FC initiator for tape drives, FlexArray Virtualization systems, and MetroCluster configurations. You need to use the FC target for SAN clients.

9. Verify the settings:

   `ucadmin show`

10. Verify the settings:

If the system…	Then…

Has storage disks	a. Stop the system:
	
	`halt`
	
	The system stops at the boot environment prompt.
	
	b. Enter the following command:
	
	`boot_ontap`

If the system…	Then…
Is a V-Series system or has FlexArray Virtualization Software and is connected to storage arrays	Reboot to maintenance mode: `boot_netapp maint`

11. Verify the settings:

If the system…	Then…
Has storage disks	`system node hardware unified-connect show`
Is a V-Series or has FlexArray Virtualization Software and is connected to storage arrays	`ucadmin show`

The output in the following examples show that the FC4 type of adapter "1b" is changing to `initiator` and that the mode of adapters "2a" and "2b" is changing to `cna`:

```
cluster1::> system node hardware unified-connect show

                Current  Current    Pending  Pending      Admin
Node  Adapter  Mode     Type       Mode     Type         Status
----  -------  -------  ---------  -------  -----------  ------
f-a   1a       fc       initiator  -        -            online
f-a   1b       fc       target     -        initiator    online
f-a   2a       fc       target     cna      -            online
f-a   2b       fc       target     cna      -            online

4 entries were displayed.
```

```
*> ucadmin show
         Current  Current    Pending  Pending    Admin
Adapter  Mode     Type       Mode     Type       Status
-------  -------  ---------  -------  ---------  ------
1a       fc       initiator  -        -          online
1b       fc       target     -        initiator  online
2a       fc       target     cna      -          online
2b       fc       target     cna      -          online
*>
```

12. Place any target ports online by entering one of the following commands, once for each port:

If the system…	Then…
Has storage disks	`network fcp adapter modify -node <node_name> -adapter <adapter_name> -state up`

If the system…	Then…
Is a V-Series system or has FlexArray Virtualization Software and is connected to storage arrays	`fcp config <adapter_name> up`

13. Cable the port.
14. Take one of the following actions:

If the system…	Then…
Has storage disks	Go to Map ports from node1 to node3.
Is a V-series system or has FlexArray Virtualization Software and is connected to storage arrays	Return to *Install and boot node3* and resume at Step 7.

Map ports from node1 to node3

You must make sure that the physical ports on node1 map correctly to the physical ports on node3, which will let node3 communicate with other nodes in the cluster and with the network after the upgrade.

Before you begin

You must already have information about the ports on the new nodes from the *Hardware Universe*. (Go to References to link to the *Hardware Universe*). You use the information later in this section and in Map ports from node2 to node4.

The software configuration of node3 must match the physical connectivity of node3, and IP connectivity must be restored before you continue with the upgrade.

About this task

Port settings might vary, depending on the model of the nodes.

You must make the original node's port and LIF configuration compatible with what you plan the new node's configuration to be. This is because the new node replays the same configuration when it boots, which means that when you boot node3, ONTAP will try to host LIFs on the same ports that were used on node1.

Therefore, if the physical ports on node1 do not map directly to the physical ports on node3, then software configuration changes will be required to restore cluster, management, and network connectivity after the boot. In addition, if the cluster ports on node1 do not directly map to the cluster ports on node3, node3 might not automatically rejoin quorum when it is rebooted until a software configuration change is made to host the cluster LIFs on the correct physical ports.

Steps

1. Record all the node1 cabling information for node1, the ports, broadcast domains, and IPspaces, in the following table:

LIF	Node1 ports	Node1 IPspaces	Node1 broadcast domain	Node3 ports	Node3 ports	Node3 broadcast domains
Cluster 1						
Cluster 2						
Cluster 3						
Cluster 4						
Cluster 5						
Cluster 6						
Node management						
Cluster management						
Data 1						
Data 2						
Data 3						
Data 4						
SAN						
Intercluster port						

Refer to Record node1 information for the steps to obtains this information.

2. Record all the cabling information for node3, the ports, broadcast domains, and IPspaces in the previous table using the same procedure in Record node1 information.
3. Follow these steps to verify if the setup is a two-node switchless cluster:
   a. Set the privilege level to advanced:

      ```
      cluster::> set -privilege advanced
      ```

   b. Verify if the setup is a two-node switchless cluster:

      ```
      network options switchless-cluster show
      ```

      ```
      cluster::*> network options switchless-cluster show
      Enable Switchless Cluster: false/true
      ```

      The value of this command must match the physical state of the system.

   c. Return to the administration privilege level:

```
cluster::*> set -privilege admin
cluster::>
```

4. Get node3 into quorum by performing the following steps:
   a. Boot node3. See Install and boot node3 to boot the node if you have not already done so.
   b. Verify that the new cluster ports are in the Cluster broadcast domain:

      ```
      network port show -node <node-name> -port <port-name> -fields broadcast-
      domain
      ```

      The following example shows that port "e0a" is in the "Cluster" domain on node3:

      ```
      cluster::> network port show -node node3 -port e0a -fields
      broadcast-domain

      node       port broadcast-domain
      ---------- ---- ----------------
      node3      e1a  Cluster
      ```

   c. Add the correct ports to the Cluster broadcast domain:

      ```
      network port modify -node <node-name> -port <port-name> -ipspace Cluster
      -mtu 9000
      ```

      This example adds Cluster port "e1b" on node3:

      ```
      network port modify -node node3 -port e1b -ipspace Cluster -mtu 9000
      ```

      For a MetroCluster configuration, you might not be able to change the broadcast domain of a port because it is associated with a port hosting the LIF of a sync-destination SVM and see errors similar to, but not restricted to the following message`:

      ```
      command failed: This operation is not permitted on a Vserver that is
      configured as the destination of a MetroCluster Vserver relationship.
      ```

      Enter the following command from the corresponding sync-source SVM on the remote site to reallocate the sync-destination LIF to an appropriate port:

      ```
      metrocluster vserver resync -vserver <Vserver-name>
      ```

   d. Migrate the cluster LIFs to the new ports, once for each LIF:

      ```
      network interface migrate -vserver Cluster -lif <LIF-name> -source-node
      <node3> -destination-node <node3> -destination-port <port-name>
      ```

e. Modify the home port of the cluster LIFs:

```
network interface modify -vserver Cluster -lif <LIF-name> –home-port <port-name>
```

f. If the cluster ports are not in the Cluster broadcast-domain, add them:

```
network port broadcast-domain add-ports -ipspace Cluster -broadcast-domain Cluster -ports <node:port>
```

g. Remove the old ports from the Cluster broadcast domain:

```
network port broadcast-domain remove-ports
```

The following example removes port "e0d" on node3:

```
network port broadcast-domain remove-ports -ipspace Cluster -broadcast-domain Cluster -ports <node3:e0d>
```

h. Verify that node3 has rejoined quorum:

```
cluster show -node <node3> -fields health
```

5. Adjust the broadcast domains hosting your cluster LIFs and node-management and/or cluster-management LIFs. Confirm that each broadcast domain contains the correct ports. A port cannot be moved between broadcast domains if it is hosting or is home to a LIF, so you might need to migrate and modify the LIFs as follows:

a. Display the home port of a LIF:

```
network interface show -fields <home-node,home-port>
```

b. Display the broadcast domain containing this port:

```
network port broadcast-domain show -ports <node_name:port_name>
```

c. Add or remove ports from broadcast domains:

```
network port broadcast-domain add-ports
```

```
network port broadcast-domain remove-ports
```

d. Modify a LIF's home port:

```
network interface modify -vserver <Vserver-name> -lif <LIF-name> –home-port <port-name>
```

6. Adjust the intercluster broadcast domains and migrate the intercluster LIFs, if necessary, using the same commands shown in Step 5.

7. Adjust any other broadcast domains and migrate the data LIFs, if necessary, using the same commands shown in Step 5.

8. If there were any ports on node1 that no longer exist on node3, follow these steps to delete them:
   a. Access the advanced privilege level on either node:

      ```
      set -privilege advanced
      ```

   b. Delete the ports:

      ```
      network port delete -node <node-name> -port <port-name>
      ```

   c. Return to the admin level:

      ```
      set -privilege admin
      ```

9. Adjust all the LIF failover groups:

   ```
   network interface modify -failover-group <failover-group> -failover-policy
   <failover-policy>
   ```

   The following example sets the failover policy to "broadcast-domain-wide" and uses the ports in failover group "fg1" as failover targets for LIF "data1" on "node3":

   ```
   network interface modify -vserver node3 -lif data1 failover-policy
   broadcast-domainwide -failover-group fg1
   ```

   Go to References to link to *Network Management* or the *ONTAP 9 Commands: Manual Page Reference* for more information.

10. Verify the changes on node3:

    ```
    network port show -node node3
    ```

11. Each cluster LIF must be listening on port 7700. Verify that the cluster LIFs are listening on port 7700:

    ```
    ::> network connections listening show -vserver Cluster
    ```

    Port 7700 listening on cluster ports is the expected outcome as shown in the following example for a two-node cluster:

    ```
    Cluster::> network connections listening show -vserver Cluster
    Vserver Name     Interface Name:Local Port     Protocol/Service
    ---------------- ----------------------------  -------------------
    Node: NodeA
    Cluster          NodeA_clus1:7700               TCP/ctlopcp
    Cluster          NodeA_clus2:7700               TCP/ctlopcp
    Node: NodeB
    Cluster          NodeB_clus1:7700               TCP/ctlopcp
    Cluster          NodeB_clus2:7700               TCP/ctlopcp
    4 entries were displayed.
    ```

12. If necessary, for each cluster LIF that is not listening on port 7700, set the administrative status of the LIF to `down` and then `up`:

    ```
    ::> net int modify -vserver Cluster -lif <cluster-lif> -status-admin down; net
    int modify -vserver Cluster -lif <cluster-lif> -status-admin up
    ```

    Repeat Step 11 to verify that the cluster LIF is now listening on port 7700.

Verify the node3 installation

After you install and boot node3, you must verify that it is installed correctly, that it is part of the cluster, and that it can communicate with node2.

Steps

1. At the system prompt, log in to node3. Then, verify that node3 is both part of the same cluster as node2 and healthy:

    ```
    cluster show
    ```

2. Verify that node3 can communicate with node2 and that all LIFs are up:

    ```
    network interface show -curr-node <node3>
    ```

3. Take one of the following actions:

If the cluster is…	Then…
In a SAN environment	Complete Step 4 and then go to the section Moving NAS data LIFs owned by node1 from node2 to node3 and verifying SAN LIFs on node3.
Not in a SAN environment	Skip Step 4 and go to Moving NAS data LIFs owned by node1 from node2 to node3 and verifying SAN LIFs on node3.

4. Verify that node2 and node3 are in quorum by entering the following command on one of the nodes and examining its output:

    ```
    event log show -messagename scsiblade.*
    ```

    The following example shows the output when the nodes in the cluster are in quorum:

```
cluster::> event log show -messagename scsiblade.*
Time                Node   Severity      Event
------------------- ------ ------------- -------------------------
8/13/2012 14:03:51  node1  INFORMATIONAL scsiblade.in.quorum: The scsi-
blade ...
8/13/2012 14:03:51  node2  INFORMATIONAL scsiblade.in.quorum: The scsi-
blade ...
8/13/2012 14:03:48  node3  INFORMATIONAL scsiblade.in.quorum: The scsi-
blade ...
8/13/2012 14:03:43  node4  INFORMATIONAL scsiblade.in.quorum: The scsi-
blade ...
```

Move NAS data LIFs owned by node1 from node2 to node3 and verify SAN LIFs on node3

After you verify the node3 installation and before you relocate aggregates from node2 to node3, you must move the NAS data LIFs belonging to node1 that are currently on node2 from node2 to node3. You also need to verify the SAN LIFs on node3.

About this task

Remote LIFs handle traffic to SAN LUNs during the upgrade procedure. Moving SAN LIFs is not necessary for cluster or service health during the upgrade. SAN LIFs are not moved unless they need to be mapped to new ports. You will verify that the LIFs are healthy and located on appropriate ports after you bring node3 online.

Steps

1. List all the NAS data LIFs not owned by node2 by entering the following command on either node and capturing the output:

   `network interface show -role data -curr-node <node2> -is-home false -home-node <node3>`

2. If the cluster is configured for SAN LIFs, record the SAN LIFs `adapter` and `switch-port` configuration information in this worksheet for use later in the procedure.

   a. List the SAN LIFs on node2 and examine the output:

      `network interface show -data-protocol fc*`

      The system returns output similar to the following example:

```
cluster1::> net int show -data-protocol fc*
  (network interface show)
            Logical     Status     Network            Current
Current Is
Vserver     Interface   Admin/Oper Address/Mask       Node
Port    Home
----------  ----------  ---------- ------------------ -------------
------- ----
svm2_cluster1
            lif_svm2_cluster1_340
                        up/up      20:02:00:50:56:b0:39:99
                                                      cluster1-01
1b      true
            lif_svm2_cluster1_398
                        up/up      20:03:00:50:56:b0:39:99
                                                      cluster1-02
1a      true
            lif_svm2_cluster1_691
                        up/up      20:01:00:50:56:b0:39:99
                                                      cluster1-01
1a      true
            lif_svm2_cluster1_925
                        up/up      20:04:00:50:56:b0:39:99
                                                      cluster1-02
1b      true
4 entries were displayed.
```

b. List the existing configurations and examine the output:

   `fcp adapter show -fields switch-port,fc-wwpn`

   The system returns output similar to the following example:

```
cluster1::> fcp adapter show -fields switch-port,fc-wwpn
  (network fcp adapter show)
node          adapter  fc-wwpn                  switch-port
------------  -------  -----------------------  -------------
cluster1-01   0a       50:0a:09:82:9c:13:38:00  ACME Switch:0
cluster1-01   0b       50:0a:09:82:9c:13:38:01  ACME Switch:1
cluster1-01   0c       50:0a:09:82:9c:13:38:02  ACME Switch:2
cluster1-01   0d       50:0a:09:82:9c:13:38:03  ACME Switch:3
cluster1-01   0e       50:0a:09:82:9c:13:38:04  ACME Switch:4
cluster1-01   0f       50:0a:09:82:9c:13:38:05  ACME Switch:5
cluster1-01   1a       50:0a:09:82:9c:13:38:06  ACME Switch:6
cluster1-01   1b       50:0a:09:82:9c:13:38:07  ACME Switch:7
cluster1-02   0a       50:0a:09:82:9c:6c:36:00  ACME Switch:0
cluster1-02   0b       50:0a:09:82:9c:6c:36:01  ACME Switch:1
cluster1-02   0c       50:0a:09:82:9c:6c:36:02  ACME Switch:2
cluster1-02   0d       50:0a:09:82:9c:6c:36:03  ACME Switch:3
cluster1-02   0e       50:0a:09:82:9c:6c:36:04  ACME Switch:4
cluster1-02   0f       50:0a:09:82:9c:6c:36:05  ACME Switch:5
cluster1-02   1a       50:0a:09:82:9c:6c:36:06  ACME Switch:6
cluster1-02   1b       50:0a:09:82:9c:6c:36:07  ACME Switch:7
16 entries were displayed
```

3. Take one of the following actions:

If node1…	Then…
Had interface groups or VLANs configured	Go to Step 4.
Did not have interface groups or VLANs configured	Skip Step 4 and go to Step 5.

4. Perform the following substeps to migrate any NAS data LIFs hosted on interface groups and VLANs that were originally on node1 from node2 to node3:

   a. Migrate any data LIFs hosted on node2 that previously belonged to node1 on an interface group to a port on node3 that is capable of hosting LIFs on the same network by entering the following command, once for each LIF:

   ```
   network interface migrate -vserver <vserver_name> -lif <LIF_name>
   -destination-node <node3> -destination-port <netport|ifgrp>
   ```

   b. Modify the home port and home node of the LIF in Substep a to the port and node currently hosting the LIFs by entering the following command, once for each LIF:

   ```
   network interface modify -vserver <vserver_name> -lif <LIF_name> -home-node
   <node3> -home-port <netport|ifgrp>
   ```

   c. Migrate any data LIF hosted on node2 that previously belonged to node1 on a VLAN port to a port on node3 that is capable of hosting LIFs on the same network by entering the following command, once

for each LIF:

```
network interface migrate -vserver <vserver_name> -lif <LIF_name>
-destination-node <node3> -destination-port <netport|ifgrp>
```

d. Modify the home port and home node of the LIFs in Substep c to the port and node currently hosting the LIFs by entering the following command, once for each LIF:

```
network interface modify -vserver <vserver_name> -lif <LIF_name> -home-node
<node3> -home-port <netport|ifgrp>
```

5. Take one of the following actions:

If the cluster is configured for…	Then…
NAS	Complete Step 6 and Step 7, skip Step 8, and complete Step 9 through Step 12.
SAN	Disable all the SAN LIFs on the node to take them down for the upgrade: `network interface modify -vserver <vserver_name> -lif <LIF_name> -home-node <node_to_upgrade> -home-port <netport|ifgrp> -status-admin down`

6. If you have data ports that are not the same on your platforms, then add the ports to the broadcast domain:

```
network port broadcast-domain add-ports -ipspace <IPspace_name> -broadcast
-domain mgmt -ports <node:port>
```

The following example adds port "e0a" on node "6280-1" and port "e0i" on node "8060-1" to broadcast domain "mgmt" in the IPspace "Default":

```
cluster::> network port broadcast-domain add-ports -ipspace Default
-broadcast-domain mgmt -ports 6280-1:e0a, 8060-1:e0i
```

7. Migrate each NAS data LIF to node3 by entering the following command, once for each LIF:

```
network interface migrate -vserver <vserver_name> -lif <LIF_name> -destination
-node <node3> -destination-port <netport|ifgrp>
```

8. Make sure that the data migration is persistent:

```
network interface modify -vserver <vserver_name> -lif <LIF_name>-home-port
<netport|ifgrp> -home-node <node3>
```

9. Confirm that the SAN LIFs are on the correct ports on node3:

a. Enter the following command and examine its output:

```
network interface show -data-protocol iscsi|fcp -home-node <node3>
```

The system returns output similar to the following example:

```
cluster::> net int show -data-protocol iscsi|fcp -home-node node3
              Logical     Status      Network             Current
Current  Is
 Vserver      Interface   Admin/Oper  Address/Mask        Node
Port     Home
 -----------  ----------  ----------  ------------------
-------------  -------  ----
 vs0
              a0a         up/down     10.63.0.53/24       node3
a0a      true
              data1       up/up       10.63.0.50/18       node3
e0c      true
              rads1       up/up       10.63.0.51/18       node3
e1a      true
              rads2       up/down     10.63.0.52/24       node3
e1b      true
 vs1
              lif1        up/up       172.17.176.120/24   node3
e0c      true
              lif2        up/up       172.17.176.121/24   node3
e1a      true
```

b. Verify that the new and `adapter` and `switch-port` configurations are correct by comparing the output from the `fcp adapter show` command with the configuration information that you recorded in the worksheet in Step 2.

List the new SAN LIF configurations on node3:

```
fcp adapter show -fields switch-port,fc-wwpn
```

The system returns output similar to the following example:

```
cluster1::> fcp adapter show -fields switch-port,fc-wwpn
  (network fcp adapter show)
node         adapter fc-wwpn                 switch-port
------------ ------- ----------------------- -------------
cluster1-01 0a      50:0a:09:82:9c:13:38:00 ACME Switch:0
cluster1-01 0b      50:0a:09:82:9c:13:38:01 ACME Switch:1
cluster1-01 0c      50:0a:09:82:9c:13:38:02 ACME Switch:2
cluster1-01 0d      50:0a:09:82:9c:13:38:03 ACME Switch:3
cluster1-01 0e      50:0a:09:82:9c:13:38:04 ACME Switch:4
cluster1-01 0f      50:0a:09:82:9c:13:38:05 ACME Switch:5
cluster1-01 1a      50:0a:09:82:9c:13:38:06 ACME Switch:6
cluster1-01 1b      50:0a:09:82:9c:13:38:07 ACME Switch:7
cluster1-02 0a      50:0a:09:82:9c:6c:36:00 ACME Switch:0
cluster1-02 0b      50:0a:09:82:9c:6c:36:01 ACME Switch:1
cluster1-02 0c      50:0a:09:82:9c:6c:36:02 ACME Switch:2
cluster1-02 0d      50:0a:09:82:9c:6c:36:03 ACME Switch:3
cluster1-02 0e      50:0a:09:82:9c:6c:36:04 ACME Switch:4
cluster1-02 0f      50:0a:09:82:9c:6c:36:05 ACME Switch:5
cluster1-02 1a      50:0a:09:82:9c:6c:36:06 ACME Switch:6
cluster1-02 1b      50:0a:09:82:9c:6c:36:07 ACME Switch:7
16 entries were displayed
```

If a SAN LIF in the new configuration is not on an adapter that is still attached to the same `switch-port`, it might cause a system outage when you reboot the node.

c. If node3 has any SAN LIFs or groups of SAN LIFs that are on a port that did not exist on node1 or that need to be mapped to a different port, move them to an appropriate port on node3 by completing the following substeps:

   i. Set the LIF status to "down":

   ```
   network interface modify -vserver <vserver_name> -lif <LIF_name> -status
   -admin down
   ```

   ii. Remove the LIF from the port set:

   ```
   portset remove -vserver <vserver_name> -portset <portset_name> -port-name
   <port_name>
   ```

   iii. Enter one of the following commands:

   - Move a single LIF:

     ```
     network interface modify -vserver <vserver_name> -lif <LIF_name> -home
     -port <new_home_port>
     ```

   - Move all the LIFs on a single nonexistent or incorrect port to a new port:

     ```
     network interface modify {-home-port <port_on_node1> -home-node
     ```

```
<node1> -role data} -home-port <new_home_port_on_node3>
```

- Add the LIFs back to the port set:

```
portset add -vserver <vserver_name> -portset <portset_name> -port-name
<port_name>
```

> You must move SAN LIFs to a port that has the same link speed as the original port.

10. Modify the status of all LIFs to "up" so the LIFs can accept and send traffic on the node:

```
network interface modify -home-port <port_name> -home-node <node3> -lif data
-status-admin up
```

11. Enter the following command on either node and examine its output to verify that LIFs have been moved to the correct ports and that the LIFs have the status of "up" by entering the following command on either node and examining the output:

```
network interface show -home-node <node3> -role data
```

12. If any LIFs are down, set the administrative status of the LIFs to "up" by entering the following command, once for each LIF:

```
network interface modify -vserver <vserver_name> -lif <LIF_name> -status-admin
up
```

13. Send a post-upgrade AutoSupport message to NetApp for node1:

```
system node autosupport invoke -node <node3> -type all -message "node1
successfully upgraded from <platform_old> to <platform_new>"
```

Worksheet: Information to record before moving NAS data LIFs to node3

To help verify that you have the correct configuration after moving SAN LIFs from node2 to node3, you can use the following worksheet to record the `adapter` and `switch-port` information for each LIF.

Record the LIF `adapter` information from the `network interface show -data-protocol fc*` command output and the `switch-port` information from the `fcp adapter show -fields switch-port,fc-wwpn` command output for node2.

After you complete the migration to node3, record the LIF `adapter` and `switch-port` information for the LIFs on node3 and verify that each LIF is still connected to the same `switch-port`.

Node2			**Node3**		
LIF	`adapter`	`switch-port`	**LIF**	`adapter`	`switch-port`

Node2			Node3		

Relocate non-root aggregates from node2 to node3

Before you can replace node2 with node4, you must send an AutoSupport message for node2 and then relocate the non-root aggregates that are owned by node2 to node3.

Steps

1. Send an AutoSupport message to NetApp for node2:

   ```
   system node autosupport invoke -node <node2> -type all -message "Upgrading
   <node2> from <platform_old> to <platform_new>"
   ```

2. Verify that the AutoSupport message was sent:

   ```
   system node autosupport show -node <node2> -instance
   ```

   The fields "Last Subject Sent:"" and "Last Time Sent:"" contain the message title of the last message that was sent and the time when the message was sent.

3. Relocate the non-root aggregates:

   a. Set the privilege level to advanced:

      ```
      set -privilege advanced
      ```

   b. List the aggregates that are owned by node2:

      ```
      storage aggregate show -owner-name <node2>
      ```

   c. Start aggregate relocation:

      ```
      storage aggregate relocation start -node <node2> -destination <node3>
      -aggregate-list * -ndo-controller-upgrade true
      ```

      The command locates only non-root aggregates.

   d. When prompted, enter `y`.

      Relocation occurs in the background. It can take anywhere from a few seconds to a couple of minutes to relocate an aggregate. The time includes both client outage and non-outage portions. The command does not relocate any offline or restricted aggregates.

   e. Return to the admin privilege level:

      ```
      set -privilege admin
      ```

4. Verify the relocation status of node2:

   `storage aggregate relocation show -node <node2>`

   The output will display "Done" for an aggregate after it has been relocated.

   > You must wait until all of the aggregates that are owned by node2 have been relocated to node3 before proceeding to the next step.

5. Take one of the following actions:

If relocation of…	Then…
All aggregates was successful	Go to Step 6.

If relocation of…	Then…

Any aggregates failed, or was vetoed	a. Display a detailed status message:
	`storage aggregate show -instance`
	You can also check the EMS logs to see the corrective action that is needed.
	Note: The `event log show` command lists any errors that have occurred.
	b. Perform the corrective action.
	c. Set the privilege level to advanced:
	`set -privilege advanced`
	d. Relocate any failed or vetoed aggregates:
	`storage aggregate relocation start -node <node2> -destination <node3> -aggregate-list * -ndo-controllerupgrade true`
	e. When prompted, enter `y`.
	f. Return to the admin privilege level:
	`set -privilege admin`
	If necessary, you can force the relocation by using one of the following methods:
	• By overriding veto checks:
	`storage aggregate relocation start -override -vetoes true -ndo-controller-upgrade`
	• By overriding destination checks:
	`storage aggregate relocation start -override -destination-checks true -ndocontroller-upgrade`
	For more information about the storage aggregate relocation commands, go to References to link to *Disk and aggregate management with the CLI* and the *ONTAP 9 Commands: Manual Page Reference*.

6. Verify that all of the non-root aggregates are online on node3:

`storage aggregate show -node <node3> -state offline -root false`

If any aggregates have gone offline or have become foreign, you must bring them online, once for each

aggregate:

```
storage aggregate online -aggregate <aggr_name>
```

7. Verify that all of the volumes are online on node3:

   ```
   volume show -node <node3> -state offline
   ```

   If any volumes are offline on node3, you must bring them online, once for each volume:

   ```
   volume online -vserver <Vserver-name> -volume <volume-name>
   ```

8. Verify that node2 does not own any online non-root aggregates:

   ```
   storage aggregate show -owner-name <node2> -ha-policy sfo -state online
   ```

   The command output should not display online non-root aggregates because all of the non-root online aggregates have already been relocated to node3.

Move NAS data LIFs owned by node2 to node3

After you relocate the aggregates from node2 to node3, you need to move the NAS data LIFs owned by node2 to node3.

About this task

Remote LIFs handle traffic to SAN LUNs during the upgrade procedure. Moving SAN LIFs is not necessary for cluster or service health during the upgrade. SAN LIFs are not moved unless they need to be mapped to new ports. You must verify that the LIFs are healthy and located on the appropriate ports after you move the LIFs from node3 to node4 and bring node4 online.

Steps

1. List all the NAS data LIFs owned by node2 by entering the following command on either node and capturing the output:

   ```
   network interface show -data-protocol nfs|cifs -home-node <node2>
   ```

   The following example shows the command output for node2:

```
cluster::> network interface show -data-protocol nfs|cifs -home-node
node2
              Logical     Status      Network             Current
Current  Is
 Vserver      Interface   Admin/Oper  Address/Mask        Node     Port
Home
 -----------  ----------  ----------  ------------------  -------
-------  ----
 vs0
              a0a         up/down     10.63.0.53/24       node2    a0a
true
              data1       up/up       10.63.0.50/18       node2    e0c
true
              rads1       up/up       10.63.0.51/18       node2    e1a
true
              rads2       up/down     10.63.0.52/24       node2    e1b
true
 vs1
              lif1        up/up       172.17.176.120/24   node2    e0c
true
              lif2        up/up       172.17.176.121/24   node2    e1a
true
```

2. Take one of the following actions:

If node2…	Then…
Has interface groups or VLANs configured	Go to Step 3.
Does not have interface groups or VLANs configured	Skip Step 3 and go to Step 4.

3. Take the following steps to migrate NAS data LIFs hosted on interface groups and VLANs on node2:
   a. Migrate any data LIFs hosted on an interface group on node2 to a port on node3 that is capable of hosting LIFs on the same network by entering the following command, once for each LIF:

      ```
      network interface migrate -vserver <Vserver_name> -lif <LIF_name>
      -destination-node <node3> -destination-port <netport|ifgrp>
      ```

   b. Modify the home port and home node of the LIFs in Substep a to the port and node currently hosting the LIFs by entering the following command, once for each node:

      ```
      network interface modify -vserver <Vserver_name> -lif <LIF_name> -home-node
      <node3> -homeport <netport|ifgrp>
      ```

   c. Migrate any LIFs hosted on VLANs on node2 to a port on node3 that is capable of hosting LIFs on the same network as that of the VLANs by entering the following command, once for each LIF:

```
network interface migrate -vserver <Vserver_name> -lif <LIF_name>
-destination-node <node3> -destination-port <netport|ifgrp>
```

d. Modify the home port and home node of the LIFs in Substep c to the port and node currently hosting the LIFs by entering the following command, once for each LIF:

```
network interface modify -vserver <Vserver_name> -lif <LIF_name> -home-node
<node3> -homeport <netport|ifgrp>
```

4. Take one of the following actions:

If the cluster is configured for…	Then…
NAS	Complete Step 5 through Step 8.
SAN	Skip Step 5 through Step 8 and then complete Step 9.
Both NAS and SAN	Complete Step 5 through Step 9.

5. If you have data ports that are not the same on your platforms, add the ports to the broadcast domain:

```
network port broadcast-domain add-ports -ipspace <IPspace_name> -broadcast
-domain mgmt -ports <node:port>
```

The following example adds port "e0a" on node "6280-1" and port "e0i" on node "8060-1" to broadcast domain "mgmt" in the IPspace "Default":

```
cluster::> network port broadcast-domain add-ports -ipspace Default
           -broadcast-domain mgmt -ports 6280-1:e0a, 8060-1:e0i
```

6. Migrate each NAS data LIF to node3 by entering the following command, once for each LIF:

```
network interface migrate -vserver <Vserver_name> -lif <LIF_name> -destination
-node <node3> -destination-port <netport|ifgrp>
```

7. Verify that NAS LIFs have been moved to the correct ports and that the LIFs have the status of up by entering the following command on either node and examining the output:

```
network interface show -curr-node <node3> -data-protocol cifs|nfs
```

8. If any LIFs are down, set the administrative status of the LIFs to "up" by entering the following command, once for each LIF:

```
network interface modify -vserver <Vserver_name> -lif <LIF_name> -status-admin
up
```

9. If you have interface groups or VLANs configured, complete the following substeps:

a. Remove the VLANs from the interface groups:

```
network port vlan delete -node <node_name> -port <ifgrp> -vlan-id <VLAN_ID>
```

b. Enter the following command and examine its output to determine if there are any interface groups configured on the node:

```
network port ifgrp show -node <node_name> -ifgrp <ifgrp_name> -instance
```

The system displays interface group information for the node, as shown in the following example:

```
cluster::> network port ifgrp show -node node2 -ifgrp a0a -instance
                  Node: node2
 Interface Group Name: a0a
Distribution Function: ip
        Create Policy: multimode_lacp
          MAC Address: MAC_address
    ort Participation: partial
        Network Ports: e2c, e2d
             Up Ports: e2c
           Down Ports: e2d
```

c. If any interface groups are configured on the node, record the names of the interface groups and the ports assigned to them and then delete the ports by entering the following command, once for each port:

```
network port ifgrp remove-port -node <node_name> -ifgrp <ifgrp_name> -port
<port_name>
```

Stage 4. Record information and retire node2

Stage 4. Record node2 information and retire node2

During Stage 4, you record node2 information and then retire node2.

Steps

1. Record node2 information
2. Retire node2

Record node2 information

Before you can shut down and retire node2, you must record information about its cluster network, management, and FC ports as well as its NVRAM System ID. You need that information later in the procedure when you map node2 to node4 and reassign disks.

Steps

1. Find the cluster network, node-management, intercluster, and cluster-management ports on node2:

```
network interface show -curr-node <node_name> -role
cluster,intercluster,nodemgmt,cluster-mgmt
```

The system displays the LIFs for that node and other nodes in the cluster, as shown in the following example:

```
cluster::> network interface show -curr-node node2 -role
cluster,intercluster,node-mgmt,cluster-mgmt
         Logical     Status     Network            Current     Current
Is
Vserver  Interface   Admin/Oper Address/Mask       Node        Port
Home
-------- ----------  ---------- ------------------ ----------  -------
----
node2
         intercluster up/up     192.168.1.202/24   node2       e0e
true
         clus1        up/up     169.254.xx.xx/24   node2       e0a
true
         clus2        up/up     169.254.xx.xx/24   node2       e0b
true
         mgmt1        up/up     192.168.0.xxx/24   node2       e0c
true
4 entries were displayed.
```

Your system might not have intercluster LIFs. You will have a cluster management LIF only on one node of a node pair. A cluster management LIF was displayed in the example output of Step 1 in *Record node1 port information*.

2. Capture the information in the output to use in the section Map ports from node2 to node4.

   The output information is required to map the new controller ports to the old controller ports.

3. Determine physical ports on node2:

   `network port show -node <node_name> -type physical +`

   `node_name` is the node which is being migrated.

   The system displays the physical ports on node2, as shown in the following example:

```
cluster::> network port show -node node2 -type physical

                                                                  Speed
(Mbps)
Node   Port      IPspace      Broadcast Domain Link   MTU    Admin/Oper
------ --------- ------------ ---------------- ----- ------- -----------
node2
       e0M       Default      IP_address       up       1500  auto/100
       e0a       Default      -                up       1500  auto/1000
       e0b       Default      -                up       1500  auto/1000
       e1a       Cluster      Cluster          up       9000  auto/10000
       e1b       Cluster      Cluster          up       9000  auto/10000
5 entries were displayed.
```

4. Record the ports and their broadcast domains.

   The broadcast domains will need to be mapped to the ports on the new controller later in the procedure.

5. Determine the FC ports on node2:

   `network fcp adapter show`

   The system displays the FC ports on the node2, as shown in the following example:

```
cluster::> network fcp adapter show -node node2
                     Connection  Host
Node         Adapter Established Port Address
------------ ------- ----------- ------------
node2
             0a      ptp         11400
node2
             0c      ptp         11700
node2
             6a      loop        0
node2
             6b      loop        0
4 entries were displayed.
```

6. Record the ports.

   The output information is required to map the new FC ports on the new controller later in the procedure.

7. If you have not done so earlier, check whether there are interface groups or VLANs configured on node2:

   `ifgrp show`

   `vlan show`

You will use the information in the section Map ports from node2 to node4.

8. Take one of the following actions:

If you…	Then…
Recorded NVRAM System ID number in Prepare the nodes for upgrade	Go to Retire node2.
Did not record the NVRAM System ID number in Prepare the nodes for upgrade	Complete Step 9 and Step 10 and then go to the next section, Retire node2.

9. Display the attributes of node2:

```
system node show -instance -node node2
```

```
cluster::> system node show -instance -node node2
                              ...
                  NVRAM System ID: system_ID
                              ...
```

10. Record the NVRAM System ID to use in the section Install and boot node4.

Retire node2

To retire node2, you must shut node2 down correctly and remove it from the rack or chassis. If the cluster is in a SAN environment, you also must delete the SAN LIFs.

Steps

1. Take one of the following actions:

If the cluster is…	Then…
A two-node cluster	Go to Step 2.
A cluster with more than two nodes	Go to Step 9.

2. Access the advanced privilege level by entering the following command on either node:

```
set -privilege advanced
```

3. Verify that the cluster HA has been disabled by entering the following command and examining its output:

```
cluster ha show
```

The system displays the following message:

```
High Availability Configured: false
```

4. Check if node2 currently holds epsilon by entering the following command and examining its output:

   `cluster show`

   The following example shows that node2 holds epsilon:

```
cluster*::> cluster show
Node                 Health  Eligibility   Epsilon
-------------------- ------- ------------  -----------
node1                true    true          false
node2                true    true          true

Warning: Cluster HA has not been configured. Cluster HA must be
configured on a two-node cluster to ensure data access availability in
the event of storage failover. Use the "cluster ha modify -configured
true" command to configure cluster HA.

2 entries were displayed.
```

   If you are upgrading a HA pair in a cluster with multiple HA pairs, you must move epsilon to the node of a HA pair not undergoing a controller upgrade. For example, if you are upgrading nodeA/nodeB in a cluster with the HA pair configuration nodeA/nodeB and nodeC/nodeD, you must move epsilon to nodeC or nodeD.

5. If node2 holds epsilon, mark epsilon as `false` on the node so that it can be transferred to node3:

   `cluster modify -node <node2> -epsilon false`

6. Transfer epsilon to node3 by marking epsilon `true` on node3:

   `cluster modify -node <node3> -epsilon true`

7. Verify if the setup is a two-node switchless cluster:

   `network options switchless-cluster show`

```
cluster::*> network options switchless-cluster show
Enable Switchless Cluster: false/true
```

   The value of this command must match the physical state of the system.

8. Verify if the setup is a two-node switchless cluster:

   `network options switchless-cluster show`

```
cluster::*> network options switchless-cluster show
Enable Switchless Cluster: false/true
```

The value of this command must match the physical state of the system.

9. Return to the admin level:

```
set -privilege admin
```

10. Halt node2 by entering the following command on either controller:
`system node halt -node <node2>`
11. After node2 shuts down completely, remove it from the chassis or the rack. You can decommission node2 after the upgrade is completed. See Decommission the old system.

Stage 5. Install and boot node4

Stage 5. Install and boot node4

During Stage 5, you install and boot node4, map the cluster and node-management ports from node2 to node4, and verify the node4 installation. You also move the data LIFs and SAN LIFs owned by node2 from node3 to node4, and relocate node2's aggregates from node3 to node4.

Steps

1. Install and boot node4
2. Set the FC or UTA/UTA2 configuration on node4
3. Map ports from node2 to node4
4. Verify the node4 installation
5. Move NAS data LIFs owned by node2 from node3 to node4 and verify SAN LIFs on node4
6. Relocate node2's non-root aggregates from node3 to node4

Install and boot node4

You must install node4 in the rack, transfer node2 connections to node4, and boot node4. You must also reassign any node2 spares, any disks belonging to root, and any non-root aggregates that were not relocated to node3 earlier.

About this task

You must netboot node4 if it does not have the same version of ONTAP 9 that is installed on node2. After you install node4, boot it from the ONTAP 9 image stored on the web server. You can then download the correct files to the boot media device for subsequent system boots by following the instructions in Prepare for netboot

However, you are not required to netboot node4 if it has the same or later version of Data ONTAP 9 that is installed on node2.

Important information:

- If you are upgrading a V-Series system or a system with FlexArray Virtualization Software that is connected to storage arrays, you need to complete Step 1 through Step 7, leave this section at Step 8 and follow instructions in Set the FC or UTA/UTA2 configuration on node4 as needed, entering the commands in Maintenance mode. You then need to return to this section and resume the procedure at Step 9.
- However, if you are upgrading a system with storage disks, you need to complete this entire section and then proceed to the section Set the FC or UTA/UTA2 configuration on node4, entering commands at the cluster prompt.

Steps

1. Take one of the following actions:

If node4 will be in …	Then…
A chassis separate from node3	Go to Step 2.
The same chassis with node3	Skip Steps 2 and 3 and go to Step 4.

2. Make sure that node4 has sufficient rack space.

   If node4 is in a separate chassis from node3, you can put node4 in the same location as node2. If node3 and node4 are in the same chassis, then node4 is already in its appropriate rack location.

3. Install node4 in the rack, following the instructions in the *Installation and Setup Instructions* for the node model.
4. Cable node4, moving the connections from node2 to node4.

   The following references help you make proper cable connections. Go to References to link to them.

   - *Installation and Setup Instructions* or *FlexArray Virtualization Installation Requirements and Reference* for the node4 platform
   - The appropriate disk shelf procedure
   - The *High Availability management* documentation

     Cable the following connections:

   - Console (remote management port)
   - Cluster ports
   - Data ports
   - Cluster and node management ports
   - Storage
   - SAN configurations: iSCSI Ethernet and FC switch ports

   > You do not need to move the interconnect card/FC_VI card or interconnect/FC_VI cable connection from node2 to node4 because most platform models have unique interconnect card models.

5. Take one of the following actions:

If node4 is in…	Then…
The same chassis as node3	Go to Step 8.

If node4 is in…	Then…
A chassis separate from node3	Go to Step 6.

6. Turn on the power to node4, and then interrupt the boot by pressing `Ctrl-C` to access the boot environment prompt.

   When you boot node4, you might see the following message:

```
WARNING: The battery is unfit to retain data during a power
         outage. This is likely because the battery is
         discharged but could be due to other temporary
         conditions.
         When the battery is ready, the boot process will
         complete and services will be engaged.
         To override this delay, press 'c' followed by 'Enter'
```

7. If you see the warning message in Step 6, take the following actions:
   a. Check for any console messages that might indicate a problem other than a low NVRAM battery and, if necessary, take any required corrective action.
   b. Allow the battery to charge and the boot process to finish.

   Warning: Do not override the delay. Failure to allow the battery to charge could result in a loss of data.

8. Take one of the following actions:

If your system…	Then…
Has disks and no back-end storage	Skip Step 9 through Step 14 and go to Step 15.
Is a V-Series system or has FlexArray Virtualization Software and is connected to storage arrays	a. Go to the section *Set the FC or UTA/UTA2 configuration on node4* and complete the sections Configure FC ports on node4 and Check and configure UTA/UTA2 ports on node4, as appropriate to your system. b. Return to this section and complete the remaining steps, beginning with Step 9. **Important**: You must reconfigure FC onboard ports, UTA/UTA2 onboard ports, and UTA/UTA2 cards before you boot Data ONTAP on the V-Series system.

9. Add the FC initiator ports of the new node to the switch zones.

   See your storage array and zoning documentation for instructions.

10. Add the FC initiator ports to the storage array as new hosts, mapping the array LUNs to the new hosts.

    See your storage array and zoning documentation for instructions.

11. Modify the World Wide Port Name (WWPN) values in the host or volume groups associated with array LUNs on the storage array.

    Installing a new controller module changes the WWPN values associated with each onboard FC port.

12. If your configuration uses switch-based zoning, adjust the zoning to reflect the new WWPN values.
13. Verify that the array LUNs are now visible to node4 by entering the following command and examining its output:

    ```
    sysconfig -v
    ```

    The system displays all the array LUNs that are visible to each of the FC initiator ports. If the array LUNs are not visible, you cannot reassign disks from node2 to node4 later in this section.

14. Press `Ctrl-C` to display the boot menu and select Maintenance mode.
15. At the Maintenance mode prompt, enter the following command:

    ```
    halt
    ```

    The system stops at the boot environment prompt.

16. Configure node4 for ONTAP:

    ```
    set-defaults
    ```

17. If FDE is used in this configuration, the `setenv bootarg.storageencryption.support` variable must be set to `true`, and the `kmip.init.maxwait` variable needs to be set to `off` to avoid a boot loop after the node2 configuration is loaded:

    ```
    setenv bootarg.storageencryption.support true
    ```

    ```
    setenv kmip.init.maxwait off
    ```

18. If the version of ONTAP installed on node4 is the same or later than the version of ONTAP 9 installed on node2, enter the following command:

    ```
    boot_ontap menu
    ```

19. Take one of the following actions:

If the system you are upgrading…	Then…
Does not have the correct or current ONTAP version on node4	Go to Step 20.
Has the correct or current version of ONTAP on node4	Go to Step 25.

20. Configure the netboot connection by choosing one of the following actions.

    You must use the management port and IP address as the netboot connection. Do not use a data LIF IP address or a data outage might occur while the upgrade is being performed.

If Dynamic Host Configuration Protocol (DHCP) is…	Then…
Running	Configure the connection automatically by entering the following command at the boot environment prompt: `ifconfig e0M -auto`
Not running	Manually configure the connection by entering the following command at the boot environment prompt: `ifconfig e0M -addr=<filer_addr> mask=<netmask> -gw=<gateway> dns=<dns_addr> domain=<dns_domain>` `<filer_addr>` is the IP address of the storage system. `<netmask>` is the network mask of the storage system. `<gateway>` is the gateway for the storage system. `<dns_addr>` is the IP address of a name server on your network. `<dns_domain>` is the Domain Name Service (DNS) domain name. If you use this optional parameter, you do not need a fully qualified domain name in the netboot server URL; you need only the server's host name. **Note**: Other parameters might be necessary for your interface. Enter `help ifconfig` at the firmware prompt for details.

21. Perform netboot on node4:

For…	Then…
FAS/AFF8000 series systems	`netboot http://<web_server_ip/path_to_webaccessible_directory>/netboot/kernel`
All other systems	`netboot http://<web_server_ip/path_to_webaccessible_directory/ontap_version>_image.tgz`

The `<path_to_the_web-accessible_directory>` should lead to where you downloaded the `<ontap_version>_image.tgz` in Step 1 in the section *Prepare for netboot*.

Do not interrupt the boot.

22. From the boot menu, select `option (7) Install new software first`.

This menu option downloads and installs the new Data ONTAP image to the boot device.

Disregard the following message:

`"This procedure is not supported for NonDisruptive Upgrade on an HA pair"`

The note applies to nondisruptive upgrades of Data ONTAP, and not upgrades of controllers.

23. If you are prompted to continue the procedure, enter y, and when prompted for the package, enter the URL:

    `http://<web_server_ip/path_to_web-accessible_directory/ontap_version>_image.tgz`

24. Complete the following substeps:

    a. Enter `n` to skip the backup recovery when you see the following prompt:

    ```
    Do you want to restore the backup configuration now? {y|n}
    ```

    b. Reboot by entering `y` when you see the following prompt:

    ```
    The node must be rebooted to start using the newly installed
    software. Do you want to reboot now? {y|n}
    ```

    The controller module reboots but stops at the boot menu because the boot device was reformatted and the configuration data needs to be restored.

25. Select maintenance mode `5` from the boot menu and enter `y` when you are prompted to continue with the boot.

26. Before continuing, go to Set the FC or UTA/UTA2 configuration on node4 to make any necessary changes to the FC or UTA/UTA2 ports on the node. Make the changes recommended in those sections, reboot the node, and go into Maintenance mode.

27. Enter the following command and examine the output to find the system ID of node4:

    `disk show -a`

    The system displays the system ID of the node and information about its disks, as shown in the following example:

```
*> disk show -a
Local System ID: 536881109
DISK         OWNER                      POOL   SERIAL NUMBER   HOME
------------ -------------              -----  -------------
-------------
0b.02.23     nst-fas2520-2(536880939)   Pool0  KPG2RK6F        nst-
fas2520-2(536880939)
0b.02.13     nst-fas2520-2(536880939)   Pool0  KPG3DE4F        nst-
fas2520-2(536880939)
0b.01.13     nst-fas2520-2(536880939)   Pool0  PPG4KLAA        nst-
fas2520-2(536880939)
......
0a.00.0                   (536881109)   Pool0  YFKSX6JG
(536881109)
......
```

28. Reassign node2's spares, disks belonging to the root, and any non-root aggregates that were not relocated to node3 earlier in section Relocate non-root aggregates from node2 to node3:

Disk type…	Run the command…
With shared disks	`disk reassign -s <node2_sysid> -d <node4_sysid> -p <node3_sysid>`
Without shared	`disks disk reassign -s <node2_sysid> -d <node4_sysid>`

For the `<node2_sysid>` value, use the information captured in Step 10 of the *Record node2 information* section. For `<node4_sysid>`, use the information captured in Step 23.

The `-p` option is only required in maintenance mode when shared disks are present.

The `disk reassign` command will reassign only those disks for which `<node2_sysid>` is the current owner.

The system displays the following message:

```
Partner node must not be in Takeover mode during disk reassignment from
maintenance mode.
Serious problems could result!!
Do not proceed with reassignment if the partner is in takeover mode.
Abort reassignment (y/n)? n
```

Enter `n` when asked to abort disk reassignment.

When you are asked to abort disk reassignment, you must answer a series of prompts as shown in the following steps:

a. The system displays the following message:

```
After the node becomes operational, you must perform a takeover and
giveback of the HA partner node to ensure disk reassignment is
successful.
Do you want to continue (y/n)? y
```

b. Enter `y` to continue.

The system displays the following message:

```
Disk ownership will be updated on all disks previously belonging to
Filer with sysid <sysid>.
Do you want to continue (y/n)? y
```

c. Enter `y` to allow disk ownership to be updated.

29. If you are upgrading from a system with external disks to a system that supports internal and external disks (A800 systems, for example), set node4 as root to confirm that it boots from the root aggregate of node2.

Warning: You must perform the following substeps in the exact order shown; failure to do so might cause an outage or even data loss.

The following procedure sets node4 to boot from the root aggregate of node2:

a. Check the RAID, plex, and checksum information for the node2 aggregate:

```
aggr status -r
```

b. Check the overall status of the node2 aggregate:

```
aggr status
```

c. If necessary, bring the node2 aggregate online:

```
aggr_online root_aggr_from_<node2>
```

d. Prevent the node4 from booting from its original root aggregate:

```
aggr offline <root_aggr_on_node4>
```

e. Set the node2 root aggregate as the new root aggregate for node4:

```
aggr options aggr_from_<node2> root
```

30. Verify that the controller and chassis are configured as `ha` by entering the following command and observing the output:

```
ha-config show
```

The following example shows the output of the `ha-config show` command:

```
*> ha-config show
   Chassis HA configuration: ha
   Controller HA configuration: ha
```

Systems record in a PROM whether they are in an HA pair or a stand-alone configuration. The state must be the same on all components within the stand-alone system or HA pair.

If the controller and chassis are not configured as `ha`, use the following commands to correct the configuration:

```
ha-config modify controller ha
```

```
ha-config modify chassis ha.
```

If you have a MetroCluster configuration, use the following commands to correct the configuration:

```
ha-config modify controller mcc
```

```
ha-config modify chassis mcc.
```

31. Destroy the mailboxes on node4:

```
mailbox destroy local
```

32. Exit Maintenance mode:

```
halt
```

The system stops at the boot environment prompt.

33. On node3, check the system date, time, and time zone:

```
date
```

34. On node4, check the date at the boot environment prompt:

```
show date
```

35. If necessary, set the date on node4:

```
set date <mm/dd/yyyy>
```

36. On node4, check the time at the boot environment prompt:

```
show time
```

37. If necessary, set the time on node4:

```
set time <hh:mm:ss>
```

38. Verify the partner system ID is set correctly as noted in Step 26 under option.

```
printenv partner-sysid
```

39. If necessary, set the partner system ID on node4:

```
setenv partner-sysid <node3_sysid>
```

    a. Save the settings:

```
saveenv
```

40. Enter the boot menu at the boot environment prompt:

```
boot_ontap menu
```

41. At the boot menu, select option **(6) Update flash from backup config** by entering `6` at the prompt.

    The system displays the following message:

```
This will replace all flash-based configuration with the last backup to
disks. Are you sure you want to continue?:
```

42. Enter `y` at the prompt.

    The boot proceeds normally, and the system prompts you to confirm the system ID mismatch.

    The system might reboot twice before displaying the mismatch warning.

43. Confirm the mismatch.
    The node might complete one round of rebooting before booting normally.
44. Log in to node4.

Set the FC or UTA/UTA2 configuration on node4

If node4 has onboard FC ports, onboard unified target adapter (UTA/UTA2) ports, or a UTA/UTA2 card, you must configure the settings before completing the rest of the procedure.

About this task

You might need to complete Configure FC ports on node4, the Check and configure UTA/UTA2 ports on node4, or both sections.

If node4 does not have onboard FC ports, onboard UTA/UTA2 ports, or a UTA/UTA2 card, and you are upgrading a system with storage disks, you can skip to Map ports from node2 to node4.

However, if you have a V-Series system or have FlexArray Virtualization Software and are connected to storage arrays, and node4 does not have onboard FC ports, onboard UTA/ UTA2 ports, or a UTA/UTA2 card,

you must return to the *Install and boot node4* section and resume at Step 9. Make sure that node4 has sufficient rack space. If node4 is in a separate chassis from node2, you can put node4 in the same location as node3. If node2 and node4 are in the same chassis, then node4 is already in its appropriate rack location.

Choices

- Configure FC ports on node4
- Check and configure UTA/UTA2 ports on node4

Configure FC ports on node4

If node4 has FC ports, either onboard or on an FC adapter, you must set port configurations on the node before you bring it into service because the ports are not preconfigured. If the ports are not configured, you might experience a disruption in service.

Before you begin

You must have the values of the FC port settings from node2 that you saved in the section Prepare the nodes for upgrade.

About this task

You can skip this section if your system does not have FC configurations. If your system has onboard UTA/UTA2 ports or a UTA/UTA2 adapter, you configure them in Check and configure UTA/UTA2 ports on node4.

Important: If your system has storage disks, you must enter the commands in this section at the cluster prompt. If you have a V-Series system or a system with FlexArray Virtualization Software connected to storage arrays, you enter commands in this section in Maintenance mode.

Steps

1. Take one of the following actions:

If the system that you are upgrading…	Then…
Has storage disks	Go to Step 5.
Is a V-Series system or has FlexArray Virtualization Software and is connected to storage arrays	Go to Step 2.

2. Access Maintenance mode:

```
boot_ontap maint
```

3. Take one of the following actions:

If the system that you are upgrading…	Then…
Has storage disks	`system node hardware unified-connect show`
Is a V-Series system or has FlexArray Virtualization Software and is connected to storage arrays	`ucadmin show`

The system displays information about all FC and converged network adapters on the system.

4. Compare the FC settings on the new nodes with the settings that you captured earlier from the original node.
5. Take one of the following actions:

If the system that you are upgrading…	Then…

Has storage disks	Modify the FC ports on node4 as needed:
	• To program target ports:
	`system node hardware unified-connect modify -type | -t target -adapter <port_name>`
	• To program initiator ports:
	`system node unified-connect modify type | -t initiator -adapter <port_name>`
	`-type` is the FC4 type, target or initiator.

Is a V-Series system or has FlexArray Virtualization Software and is connected to storage arrays	Modify the FC ports on node4 as needed: `ucadmin modify -m fc -t initiator -f <adapter_port_name>` `-t` is the FC4 type, target or initiator. **Note**: The FC ports need to be programmed as initiators.

6. Take one of the following actions:

If the system that you are upgrading…	Then…
Has storage disks	Verify the new settings by entering the following command and examining the output: `system node unified-connect show`
Is a V-Series system or has FlexArray Virtualization Software and is connected to storage arrays	Verify the new settings by entering the following command and examining the output: `ucadmin show`

7. Take one of the following actions:

If the default FC settings on the new nodes are…	Then…
The same as the ones you that captured on the original nodes	Go to Step 11.

If the default FC settings on the new nodes are…	Then…
Different from the ones that you captured on the original nodes	Go to Step8.

8. Exit Maintenance mode:

```
halt
```

9. After you enter the command, wait until the system stops at the boot environment prompt.
10. Take one of the following actions:

If the system that you are upgrading…	Then…
Is a V-Series system or has FlexArray Virtualization software running Data ONTAP 8.3.0 or later	Access Maintenance mode by entering the following command at the boot environment prompt: `boot_ontap maint`
Is not a V-Series system and does not have FlexArray Virtualization software	Boot node4 by entering the following command at the boot environment prompt: `boot_ontap`

11. Take one of the following actions:

If the system that you are upgrading…	Then…
Has storage disks	• Go to Check and configure UTA/UTA2 ports on node4 if node4 has a UTA/UTA2A card or UTA/UTA2 onboard ports. • Skip the section and go to Map ports from node2 to node4 if node4 does not have a UTA/UTA2 card or UTA/UTA2 onboard ports.
Is a V-Series system or has FlexArray Virtualization Software and is connected to storage arrays	• Go to Check and configure UTA/UTA2 ports on node4 if node4 has a UTA/ UTA2 card or UTA/UTA2 onboard ports. • Skip the section *Check and configure UTA/UTA2 ports on node4* if node4 does not have a UTA/UTA2 card or UTA/UTA2 onboard ports, return to the section *Install and boot node4*, and resume the section at Step 9.

Check and configure UTA/UTA2 ports on node4

If node4 has onboard UTA/UTA2 ports or a UTA/UTA2A card, you must check the configuration of the ports and configure them, depending on how you want to use the upgraded system.

Before you begin

You must have the correct SFP+ modules for the UTA/UTA2 ports.

About this task

UTA/UTA2 ports can be configured into native FC mode or UTA/UTA2A mode. FC mode supports FC initiator and FC target; UTA/UTA2 mode enables concurrent NIC and FCoE traffic to share the same 10GbE SFP+ interface and supports FC target.

NetApp marketing materials might use the term UTA2 to refer to CNA adapters and ports. However, the CLI uses the term CNA.

UTA/UTA2 ports might be on an adapter or on the controller with the following configurations:

- UTA/UTA2 cards ordered at the same time as the controller are configured before shipment to have the personality you requested.
- UTA/UTA2 cards ordered separately from the controller are shipped with the default FC target personality.
- Onboard UTA/UTA2 ports on new controllers are configured (before shipment) to have the personality you requested.

However, you can check the configuration of the UTA/UTA2 ports on node4 and change it, if necessary.

Attention: If your system has storage disks, you enter the commands in this section at the cluster prompt unless directed to enter Maintenance mode. If you have a MetroCluster FC system, V-Series system or a system with FlexArray Virtualization software that is connected to storage arrays, you must be in Maintenance mode to configure UTA/UTA2 ports.

Steps

1. Check how the ports are currently configured by using one of the following commands on node4:

If the system…	Then…
Has storage disks	`system node hardware unified-connect show`
Is a V-Series system or has FlexArray Virtualization Software and is connected to storage arrays	`ucadmin show`

The system displays output similar to the following example:

```
*> ucadmin show
                Current  Current    Pending   Pending   Admin
Node   Adapter  Mode     Type       Mode      Type      Status
----   -------  ---      ---------  -------   --------  -------
f-a    0e       fc       initiator  -          -        online
f-a    0f       fc       initiator  -          -        online
f-a    0g       cna      target     -          -        online
f-a    0h       cna      target     -          -        online
f-a    0e       fc       initiator  -          -        online
f-a    0f       fc       initiator  -          -        online
f-a    0g       cna      target     -          -        online
f-a    0h       cna      target     -          -        online
*>
```

2. If the current SFP+ module does not match the desired use, replace it with the correct SFP+ module.

   Contact your NetApp representative to obtain the correct SFP+ module.

3. Examine the output of the `system node hardware unified-connect show` or `ucadmin show` command and determine whether the UTA/UTA2 ports have the personality you want.
4. Take one of the following actions:

If the CNA ports…	Then…
Do not have the personality that you want	Go to Step 5.
Have the personality that you want	Skip Step 5 through Step 12 and go to Step 13.

5. Take one of the following actions:

If the system…	Then…
Has storage disks and is running Data ONTAP 8.3	Boot node4 and enter maintenance mode: `boot_ontap maint`
Is a V-Series system or has FlexArray Virtualization Software and is connected to storage arrays	Go to Step 6. You should already be in Maintenance mode.

6. Take one of the following actions:

If you are configuring…	Then…
Ports on a UTA/UTA2A card	Go to Step 7.
Onboard UTA/UTA2 ports	Skip Step 7 and go to Step 8.

7. If the adapter is in initiator mode, and if the UTA/UTA2 port is online, take the UTA/UTA2 port offline:

   `storage disable adapter <adapter_name>`

   Adapters in target mode are automatically offline in Maintenance mode.

8. If the current configuration does not match the desired use, enter the following command to change the configuration as needed:

   `ucadmin modify -m fc|cna -t initiator|target <adapter_name>`

   - `-m` is the personality mode: FC or 10GbE UTA.
   - `-t` is the FC4 type: target or initiator.

   > You must use FC initiator for tape drives and FlexArray Virtualization systems. You must use the FC target for SAN clients.

9. Verify the settings by entering the following command and examining its output:

```
ucadmin show
```

10. Perform one of the following actions:

If the system…	Then…

Has storage disks	a. Enter the following command:
	`halt`
	The system stops at the boot environment prompt.
	b. Enter the following command:
	`boot_ontap`

Is a V-Series system or has FlexArray Virtualization Software and is connected to storage arrays and is running Data ONTAP 8.3	Reboot to Maintenance mode: `boot_ontap maint`

11. Verify the settings:

If the system…	Then…
Has storage disks	Enter the following command: `system node hardware unified-connect show`
Is a V-Series system or has FlexArray Virtualization Software and is connected to storage arrays	Enter the following command: `ucadmin show`

The output in the following examples shows that the FC4 type of adapter "1b" is changing to `initiator` and that the mode of adapters "2a" and "2b" is changing to `cna`.

```
cluster1::> system node hardware unified-connect show
                Current  Current    Pending  Pending    Admin
Node  Adapter  Mode     Type       Mode     Type       Status
----  -------  -------  ---------  -------  -------    -----
f-a    1a      fc       initiator  -        -          online
f-a    1b      fc       target     -        initiator  online
f-a    2a      fc       target     cna      -          online
f-a    2b      fc       target     cna      -          online
4 entries were displayed.
```

```
*> ucadmin show
                Current Current    Pending  Pending    Admin
Node   Adapter  Mode    Type       Mode     Type       Status
----   -------  ------- ---------  -------  -------    -----
f-a     1a      fc      initiator  -        -          online
f-a     1b      fc      target     -        initiator  online
f-a     2a      fc      target     cna      -          online
f-a     2b      fc      target     cna      -          online
4 entries were displayed.
*>
```

12. Place any target ports online by entering one of the following commands, once for each port:

If the system…	Then…
Has storage disks	`network fcp adapter modify -node <node_name> -adapter <adapter_name> -state up`
Is a V-Series system or has FlexArray Virtualization Software and is connected to storage arrays	`fcp config <adapter_name> up`

13. Cable the port.
14. Perform one of the following actions:

If the system…	Then…
Has storage disks	Go to Map ports from node2 to node4.
Is a V-Series system or has FlexArray Virtualization Software and is connected to storage arrays	Return to the section *Install and boot node4*, and resume the section at Step 9.

Map ports from node2 to node4

You must make sure that the physical ports on node2 map correctly to the physical ports on node4, which will let node4 communicate with other nodes in the cluster and with the network after the upgrade.

Before you begin

You must already have information about the ports on the new nodes, to access this information refer to References to link to the *Hardware Universe*. You use the information later in this section.

The software configuration of node4 must match the physical connectivity of node4, and IP connectivity must be restored before you continue with the upgrade.

About this task

Port settings might vary, depending on the model of the nodes. You must make the original node's port and LIF configuration compatible with what you plan the new node's configuration to be. This is because the new node replays the same configuration when it boots, meaning when you boot node4 that Data ONTAP will try to host

LIFs on the same ports that were used on node2.

Therefore, if the physical ports on node2 do not map directly to the physical ports on node4, then software configuration changes will be required to restore cluster, management, and network connectivity after the boot. In addition, if the cluster ports on node2 do not directly map to the cluster ports on node4, node4 may not automatically rejoin quorum when it is rebooted until a software configuration change is made to host the cluster LIFs on the correct physical ports.

Steps

1. Record all the node2 cabling information for node2, the ports, broadcast domains, and IPspaces, in this table:

LIF	Node2 ports	Node2 IPspaces	Node2 broadcast domains	Node4 ports	Node4 IPspaces	Node4 broadcast domains
Cluster 1						
Cluster 2						
Cluster 3						
Cluster 4						
Cluster 5						
Cluster 6						
Node management						
Cluster management						
Data 1						
Data 2						
Data 3						
Data 4						
SAN						
Intercluster port						

   See the "Recording node2 information" section for the steps to obtain this information.

2. Record all the cabling information for node4, the ports, broadcast domains, and IPspaces, in the previous table using the same procedure in the Record node2 information section for the steps to obtain this information.
3. Follow these steps to verify if the setup is a two-node switchless cluster:
   a. Set the privilege level to advanced:
   b. Verify if the setup is a two-node switchless cluster:

```
cluster::*> network options switchless-cluster show
Enable Switchless Cluster: false/true
```

The value of this command must match the physical state of the system.

c. Return to the administration privilege level:

```
cluster::*> set -privilege admin
cluster::>
```

4. Get node4 into quorum by performing the following steps:
   a. Boot node4. See Install and boot node4 to boot the node if you have not already done so.
   b. Verify that the new cluster ports are in the Cluster broadcast domain:

      `network port show -node <node> -port <port> -fields broadcast-domain`
      The following example shows that port "e0a" is in the Cluster domain on node4:

```
cluster::> network port show -node node4 -port e0a -fields broadcast-
domain

node       port broadcast-domain
---------- ---- ----------------
node4      e1a  Cluster
```

   c. If the cluster ports are not in the Cluster broadcast-domain, add them with the following command:

      `broadcast-domain add-ports -ipspace Cluster -broadcast-domain Cluster -ports <node:port>`

   d. Add the correct ports to the Cluster broadcast domain:

      `network port modify -node -port -ipspace Cluster -mtu 9000`

      This example adds Cluster port "e1b" on node4:

      `network port modify -node node4 -port e1b -ipspace Cluster -mtu 9000`

> For a MetroCluster configuration, you might not be able to change the broadcast domain of a port because it is associated with a port hosting the LIF of a sync-destination SVM and see errors similar to, but not restricted, to the following:

```
command failed: This operation is not permitted on a Vserver that is
configured as the destination of a MetroCluster Vserver relationship.
```

Enter the following command from the corresponding sync-source SVM on the remote site to reallocate the sync-destination LIF to an appropriate port:

```
metrocluster vserver resync -vserver <vserver_name>
```

e. Migrate the cluster LIFs to the new ports, once for each LIF:

```
network interface migrate -vserver Cluster -lif <lif_name> -source-node
node4 - destination-node node4 -destination-port <port_name>
```

f. Modify the home port of the cluster LIFs:

```
network interface modify -vserver Cluster -lif <lif_name> -home-port
<port_name>
```

g. Remove the old ports from the Cluster broadcast domain:

```
network port broadcast-domain remove-ports
```

This command removes port "e0d" on node4:
`network port broadcast-domain remove-ports -ipspace Cluster -broadcast -domain Cluster -ports node4:e0d`

h. Verify that node4 has rejoined quorum:

```
cluster show -node node4 -fields health
```

5. Adjust the broadcast domains hosting your cluster LIFs and node-management/cluster-management LIFs. Ensure that each broadcast domain contains the correct ports. A port cannot be moved between broadcast domains if it is hosting or is home to a LIF so you may need to migrate and modify the LIFs as shown in the following steps:

a. Display the home port of a LIF:

```
network interface show -fields home-node,home-port
```

b. Display the broadcast domain containing this port:

```
network port broadcast-domain show -ports <node_name:port_name>
```

c. Add or remove ports from broadcast domains:

```
network port broadcast-domain add-ports
```

```
network port broadcast-domain remove-ports
```

d. Modify a LIF's home port:

```
network interface modify -vserver <vserver_name> -lif <lif_name> -home-port
<port_name>
```

6. Adjust the intercluster broadcast domains and migrate the intercluster LIFs, if necessary, using the same commands shown in Step 5.

7. Adjust any other broadcast domains and migrate the data LIFs, if necessary, using the same

commands shown in Step 5.

8. If there were any ports on node2 that no longer exist on node4, follow these steps to delete them:
   a. Access the advanced privilege level on either node:

      ```
      set -privilege advanced
      ```

   b. To delete the ports:

      ```
      network port delete -node <node_name> -port <port_name>
      ```

   c. Return to the admin level:

      ```
      set -privilege admin
      ```

9. Adjust all the LIF failover groups:
   `network interface modify -failover-group <failover_group> -failover-policy <failover_policy>`

   The following command sets the failover policy to `broadcast-domain-wide` and uses the ports in failover group `fg1` as failover targets for LIF `data1` on `node4`:

   ```
   network interface modify -vserver node4 -lif data1 failover-policy broadcast-domain-wide -failover-group fg1
   ```

   For more information, refer to References to link to *Network Management* or the *ONTAP 9 Commands: Manual Page Reference*, and go to *Configuring failover settings on a LIF*.

10. Verify the changes on node4:

    ```
    network port show -node node4
    ```

11. Each cluster LIF must be listening on port 7700. Verify that the cluster LIFs are listening on port 7700:

    ```
    ::> network connections listening show -vserver Cluster
    ```

    Port 7700 listening on cluster ports is the expected outcome as shown in the following example for a two-node cluster:

    ```
    Cluster::> network connections listening show -vserver Cluster
    Vserver Name     Interface Name:Local Port     Protocol/Service
    ---------------- ----------------------------  -------------------
    Node: NodeA
    Cluster          NodeA_clus1:7700               TCP/ctlopcp
    Cluster          NodeA_clus2:7700               TCP/ctlopcp
    Node: NodeB
    Cluster          NodeB_clus1:7700               TCP/ctlopcp
    Cluster          NodeB_clus2:7700               TCP/ctlopcp
    4 entries were displayed.
    ```

12. If necessary, for each cluster LIF that is not listening on port 7700, set the administrative status of the LIF

to `down` and then `up`:

```
::> net int modify -vserver Cluster -lif <cluster-lif> -status-admin down; net
int modify -vserver Cluster -lif <cluster-lif> -status-admin up
```

Repeat Step 11 to verify that the cluster LIF is now listening on port 7700.

Verify the node4 installation

After you install and boot node4, you must verify that it is installed correctly, that it is part of the cluster, and that it can communicate with node3.

Steps

1. At the system prompt, log in to node4.
2. Verify that node4 is both part of the same cluster as node3 and healthy:

   ```
   cluster show
   ```

3. Verify that node4 can communicate with node3 and that all LIFs are up:

   ```
   network interface show -curr-node <node4>
   ```

4. Take one of the following actions:

If node4 is…	Then…
In a chassis separate from node3	Connect the HA interconnect between the nodes by completing the following steps: a. Connect the top interconnect port of node3 to the top interconnect port of node4. b. Connect the bottom interconnect port of node3 to the bottom interconnect port of node4. c. Go to Step 5.
In the same chassis as node3	Go to Step 5. You do not need to manually connect the HA interconnect between the nodes; in same-chassis configurations, the HA interconnect is connected automatically through the backplane.

5. Take one of the following actions:

If the cluster is…	Then…
In a SAN environment	Complete Step 6 and go to the section Move NAS data LIFs owned by node2 from node3 to node4 and verify SAN LIFs on node4.
Not in a SAN environment	Skip Step 6 go to the section Move NAS data LIFs owned by node2 from node3 to node4 and verify SAN LIFs on node4.

6. Verify that both node3 and node4 are in quorum by entering the following command on one of the nodes:

```
event log show -messagename scsiblade.*
```

The following example shows the output when the nodes in the cluster are in quorum:

```
cluster::> event log show -messagename scsiblade.*
Time                Node   Severity      Event
------------------- ------ ------------- --------------------------
8/13/2012 14:03:51  node1  INFORMATIONAL scsiblade.in.quorum: The scsi-
blade ...
8/13/2012 14:03:51  node2  INFORMATIONAL scsiblade.in.quorum: The scsi-
blade ...
8/13/2012 14:03:48  node3  INFORMATIONAL scsiblade.in.quorum: The scsi-
blade ...
8/13/2012 14:03:43  node4  INFORMATIONAL scsiblade.in.quorum: The scsi-
blade ...
```

Move NAS data LIFs owned by node2 from node3 to node4 and verify SAN LIFs on node4

After you verify the node4 installation and before you relocate node2 aggregates from node3 to node4, you must move the NAS data LIFs owned by node2 currently on node3 from node3 to node4. You also need to verify the SAN LIFs on node4.

About this task

Remote LIFs handle traffic to SAN LUNs during the upgrade procedure. Moving SAN LIFs is not necessary for cluster or service health during the upgrade. SAN LIFs are not moved unless they need to be mapped to new ports. You verify that the LIFs are healthy and located on appropriate ports after you bring node4 online.

Steps

1. List all the NAS data LIFs that are not owned by node3 by entering the following command on either node and capturing the output:

   ```
   network interface show -role data -curr-node node3 -is-home false
   ```

2. If the cluster is configured for SAN LIFs, record the SAN LIFs and existing configuration information in this worksheet for use later in the procedure.

   a. List the SAN LIFs on node3 and examine the output:

      ```
      network interface show -data-protocol fc*
      ```

      The system returns output similar to the following example:

```
cluster1::> net int show -data-protocol fc*
  (network interface show)
            Logical     Status     Network            Current
Current Is
Vserver     Interface   Admin/Oper Address/Mask       Node
Port    Home
----------  ----------  ---------- ------------------ -------------
------- ----
svm2_cluster1
            lif_svm2_cluster1_340
                        up/up      20:02:00:50:56:b0:39:99
                                                      cluster1-01
1b      true
            lif_svm2_cluster1_398
                        up/up      20:03:00:50:56:b0:39:99
                                                      cluster1-02
1a      true
            lif_svm2_cluster1_691
                        up/up      20:01:00:50:56:b0:39:99
                                                      cluster1-01
1a      true
            lif_svm2_cluster1_925
                        up/up      20:04:00:50:56:b0:39:99
                                                      cluster1-02
1b      true
4 entries were displayed.
```

b. List the existing configurations and examine the output:

   `fcp adapter show -fields switch-port,fc-wwpn`

   The system returns output similar to the following example:

```
cluster1::> fcp adapter show -fields switch-port,fc-wwpn
  (network fcp adapter show)
node          adapter  fc-wwpn                  switch-port
------------  -------  -----------------------  -------------
cluster1-01   0a       50:0a:09:82:9c:13:38:00  ACME Switch:0
cluster1-01   0b       50:0a:09:82:9c:13:38:01  ACME Switch:1
cluster1-01   0c       50:0a:09:82:9c:13:38:02  ACME Switch:2
cluster1-01   0d       50:0a:09:82:9c:13:38:03  ACME Switch:3
cluster1-01   0e       50:0a:09:82:9c:13:38:04  ACME Switch:4
cluster1-01   0f       50:0a:09:82:9c:13:38:05  ACME Switch:5
cluster1-01   1a       50:0a:09:82:9c:13:38:06  ACME Switch:6
cluster1-01   1b       50:0a:09:82:9c:13:38:07  ACME Switch:7
cluster1-02   0a       50:0a:09:82:9c:6c:36:00  ACME Switch:0
cluster1-02   0b       50:0a:09:82:9c:6c:36:01  ACME Switch:1
cluster1-02   0c       50:0a:09:82:9c:6c:36:02  ACME Switch:2
cluster1-02   0d       50:0a:09:82:9c:6c:36:03  ACME Switch:3
cluster1-02   0e       50:0a:09:82:9c:6c:36:04  ACME Switch:4
cluster1-02   0f       50:0a:09:82:9c:6c:36:05  ACME Switch:5
cluster1-02   1a       50:0a:09:82:9c:6c:36:06  ACME Switch:6
cluster1-02   1b       50:0a:09:82:9c:6c:36:07  ACME Switch:7
16 entries were displayed
```

3. Take one of the following actions:

If node2…	Description
Had interface groups or VLANs configured	Go to Step 4.
Did not have interface groups or VLANs configured	Skip Step 4 and go to Step 5.

4. Take the following steps to migrate any NAS data LIFs hosted on interface groups and VLANs that originally were on node2 from node3 to node4.

   a. Migrate any LIFs hosted on node3 that previously belonging to node2 on an interface group to a port on node4 that is capable of hosting LIFs on the same network by entering the following command, once for each LIF:

   ```
   network interface migrate -vserver <vserver_name> -lif <lif_name>
   -destination-node node4 -destination-port <netport|ifgrp>
   ```

   b. Modify the home port and home node of the LIFs in Substep a to the port and node currently hosting the LIFs by entering the following command, once for each LIF:

   ```
   network interface modify -vserver <vserver_name> -lif <datalif_name> -home
   -node node4 home-port <netport|ifgrp>
   ```

   c. Migrate any LIFs hosted on node3 that previously belonged to node2 on a VLAN port to a port on node4 that is capable of hosting LIFs on the same network by entering the following command, once

for each LIF:

```
network interface migrate -vserver <vserver_name> -lif <datalif_name>
-destination-node node4 -destination-port <netport|ifgrp>
```

d. Modify the home port and home node of the LIFs in Substep c to the port and node currently hosting the LIFs by entering the following command, once for each LIF:

```
network interface modify -vserver <vserver_name> -lif <datalif_name> -home
-node <node4> home-port <netport|ifgrp>
```

5. Take one of the following actions:

If the cluster is configured for…	Then…
NAS	Complete Step 6 through Step 9, skip Step 10, and complete Step 11 through Step 14.
SAN	Skip Step 6 through Step 9, and complete Step 10 through Step 14.
Both NAS and SAN	Complete Step 6 through Step 14.

6. If you have data ports that are not the same on your platforms, enter the following command to add the ports to the broadcast domain:

```
network port broadcast-domain add-ports -ipspace <IPspace_name> -broadcast
-domain mgmt ports <node:port>
```

The following example adds port "e0a" on node "6280-1" and port "e0i" on node "8060-1" to broadcast domain mgmt in the IPspace Default:

```
cluster::> network port broadcast-domain add-ports -ipspace Default
-broadcast-domain mgmt -ports 6280-1:e0a, 8060-1:e0i
```

7. Migrate each NAS data LIF to node4 by entering the following command, once for each LIF:

```
network interface migrate -vserver <vserver-name> -lif <datalif-name>
-destination-node <node4> -destination-port <netport|ifgrp> -home-node <node4>
```

8. Make sure that the data migration is persistent:

```
network interface modify -vserver <vserver_name> -lif <datalif_name> -home
-port <netport|ifgrp>
```

9. Verify the status of all links as `up` by entering the following command to list all the network ports and examining its output:

```
network port show
```

The following example shows the output of the `network port show` command with some LIFs up and others down:

```
cluster::> network port show
                                                                  Speed
(Mbps)
Node   Port      IPspace      Broadcast Domain Link   MTU    Admin/Oper
------ --------- ------------ ---------------- ----- ------- -----------
node3
       a0a       Default      -                up       1500  auto/1000
       e0M       Default      172.17.178.19/24 up       1500  auto/100
       e0a       Default      -                up       1500  auto/1000
       e0a-1     Default      172.17.178.19/24 up       1500  auto/1000
       e0b       Default      -                up       1500  auto/1000
       e1a       Cluster      Cluster          up       9000  auto/10000
       e1b       Cluster      Cluster          up       9000  auto/10000
node4
       e0M       Default      172.17.178.19/24 up       1500  auto/100
       e0a       Default      172.17.178.19/24 up       1500  auto/1000
       e0b       Default      -                up       1500  auto/1000
       e1a       Cluster      Cluster          up       9000  auto/10000
       e1b       Cluster      Cluster          up       9000  auto/10000
12 entries were displayed.
```

10. If the output of the `network port show` command displays network ports that are not available in the new node and are present in the old nodes, delete the old network ports by completing the following substeps:

    a. Enter the advanced privilege level by entering the following command:

       `set -privilege advanced`

    b. Enter the following command, once for each old network port:

       `network port delete -node <node_name> -port <port_name>`

    c. Return to the admin level by entering the following command:

       `set -privilege admin`

11. Confirm that the SAN LIFs are on the correct ports on node4 by completing the following substeps:

    a. Enter the following command and examine its output:

       `network interface show -data-protocol iscsi|fcp -home-node node4`

       The system returns output similar to the following example:

```
cluster::> network interface show -data-protocol iscsi|fcp -home-node
node4
            Logical    Status     Network            Current
Current Is
Vserver     Interface  Admin/Oper Address/Mask       Node
Port    Home
----------- ---------- ---------- ------------------ -------------
------- ----
vs0
            a0a          up/down  10.63.0.53/24      node4
a0a     true
            data1        up/up    10.63.0.50/18      node4
e0c     true
            rads1        up/up    10.63.0.51/18      node4
e1a     true
            rads2        up/down  10.63.0.52/24      node4
e1b     true
vs1
            lif1         up/up    172.17.176.120/24  node4
e0c     true
            lif2         up/up    172.17.176.121/24  node4
```

b. Verify that the new `adapter` and `switch-port` configurations are correct by comparing the output from the `fcp adapter show` command with the new configuration information that you recorded in the worksheet in Step 2.

   List the new SAN LIF configurations on node4:

   `fcp adapter show -fields switch-port,fc-wwpn`

   The system returns output similar to the following example:

```
cluster1::> fcp adapter show -fields switch-port,fc-wwpn
  (network fcp adapter show)
node         adapter  fc-wwpn                  switch-port
-----------  -------  -----------------------  -------------
cluster1-01  0a       50:0a:09:82:9c:13:38:00  ACME Switch:0
cluster1-01  0b       50:0a:09:82:9c:13:38:01  ACME Switch:1
cluster1-01  0c       50:0a:09:82:9c:13:38:02  ACME Switch:2
cluster1-01  0d       50:0a:09:82:9c:13:38:03  ACME Switch:3
cluster1-01  0e       50:0a:09:82:9c:13:38:04  ACME Switch:4
cluster1-01  0f       50:0a:09:82:9c:13:38:05  ACME Switch:5
cluster1-01  1a       50:0a:09:82:9c:13:38:06  ACME Switch:6
cluster1-01  1b       50:0a:09:82:9c:13:38:07  ACME Switch:7
cluster1-02  0a       50:0a:09:82:9c:6c:36:00  ACME Switch:0
cluster1-02  0b       50:0a:09:82:9c:6c:36:01  ACME Switch:1
cluster1-02  0c       50:0a:09:82:9c:6c:36:02  ACME Switch:2
cluster1-02  0d       50:0a:09:82:9c:6c:36:03  ACME Switch:3
cluster1-02  0e       50:0a:09:82:9c:6c:36:04  ACME Switch:4
cluster1-02  0f       50:0a:09:82:9c:6c:36:05  ACME Switch:5
cluster1-02  1a       50:0a:09:82:9c:6c:36:06  ACME Switch:6
cluster1-02  1b       50:0a:09:82:9c:6c:36:07  ACME Switch:7
16 entries were displayed
```

If a SAN LIF in the new configuration is not on an adapter that is still attached to the same `switch-port`, it might cause a system outage when you reboot the node.

c. If node4 has any SAN LIFs or groups of SAN LIFs that are on a port that did not exist on node2, move them to an appropriate port on node4 by entering one of the following commands:

   i. Set the LIF status to down:

   ```
   network interface modify -vserver <vserver_name> -lif <lif_name> -status
   -admin down
   ```

   ii. Remove the LIF from the port set:

   ```
   portset remove -vserver <vserver_name> -portset <portset_name> -port-name
   <port_name>
   ```

   iii. Enter one of the following commands:

   - Move a single LIF:

     ```
     network interface modify -lif <lif_name> -home-port <new_home_port>
     ```

   - Move all the LIFs on a single nonexistent or incorrect port to a new port:

     ```
     network interface modify {-home-port <port_on_node2> -home-node
     <node2> -role data} -home-port <new_home_port_on_node4>
     ```

- Add the LIFs back to the port set:

```
portset add -vserver <vserver_name> -portset <portset_name> -port-name
<port_name>
```

> You must move SAN LIFs to a port that has the same link speed as the original port.

12. Modify the status of all LIFs to `up` so the LIFs can accept and send traffic on the node by entering the following command:

```
network interface modify -vserver <vserver_name> -home-port <port_name> -home
-node <node4> lif <lif_name> -status-admin up
```

13. Verify that any SAN LIFs have been moved to the correct ports and that the LIFs have the status of `up` by entering the following command on either node and examining the output:

```
network interface show -home-node <node4> -role data
```

14. If any LIFs are down, set the administrative status of the LIFs to `up` by entering the following command, once for each LIF:

```
network interface modify -vserver <vserver_name> -lif <lif_name> -status-admin
up
```

Worksheet: Information to record before moving NAS data LIFs to node4

To help verify that you have the correct configuration after moving SAN LIFs from node3 to node4, you can use the following worksheet to record the `adapter` and `switch-port` information for each LIF.

Record the LIF `adapter` information from the `network interface show -data-protocol fc*` command output and the `switch-port` information from the `fcp adapter show -fields switch-port,fc-wwpn` command output for node3.

After you complete the migration to node4, record the LIF `adapter` and `switch-port` information for the LIFs on node4 and verify that each LIF is still connected to the same `switch-port`.

Node3			Node4		
LIF	`adapter`	`switch-port`	**LIF**	`adapter`	`switch-port`

Relocate node2's non-root aggregates from node3 to node4

Having relocated node2's non-root aggregates to node3, you now must relocate them from node3 to node4.

Steps

1. Enter the following command on either controller, and examine the output to identify which non-root aggregates to relocate:

   ```
   storage aggregate show -owner-name <node3> -home-id <node2_system_id>
   ```

2. Relocate the aggregates by completing the following substeps:

   a. Access the advanced privilege level by entering the following command on either node:

      ```
      set -privilege advanced
      ```

   b. Enter the following command:

      ```
      storage aggregate relocation start -node <node3> -destination <node4>
      -aggregate-list <aggr_name1, aggr_name2…> -ndo-controller-upgrade true
      ```

      The aggregate list is the list of aggregates owned by node4 that you obtained in Step 1.

   c. When prompted, enter `y`.

      Relocation occurs in the background. It could take anywhere from a few seconds to a couple of minutes to relocate an aggregate. The time includes both client outage and non-outage portions. The command does not relocate any offline or restricted aggregates.

   d. Return to the admin level:

      ```
      set -privilege admin
      ```

3. Check the relocation status:

   ```
   storage aggregate relocation show -node <node3>
   ```

   The output will display `Done` for an aggregate after it has been relocated.

   Wait until all the node2 aggregates have been relocated to node4 before proceeding to the next step.

4. Take one of the following actions:

If relocation of…	Then…
All aggregates was successful	Go to Step 5.

If relocation of…	Then…

Any aggregates failed, or were vetoed	a. Check the EMS logs for the corrective action.
	b. Perform the corrective action.
	c. Access the advanced privilege level by entering the following command on either node:
	`set -privilege advanced`
	d. Relocate any failed or vetoed aggregates:
	`storage aggregate relocation start -node <node3> destination <node4> -aggregate-list <aggr_name1, aggr_name2…> ndo-controller-upgrade true`
	The aggregate list is the list of failed or vetoed aggregates.
	e. When prompted, enter `y`.
	f. Return to the admin level by entering the following command:
	`set -privilege admin`
	If necessary, you can force the relocation using one of the following methods:
	• Overriding veto checks:
	`storage aggregate relocation start -override -vetoes -ndo-controller-upgrade`
	• Overriding destination checks:
	`storage aggregate relocation start -override -destination-checks -ndocontroller-upgrade`
	For more information about storage aggregate relocation commands refer to References to link to *Disk and aggregate management with the CLI* and the *ONTAP 9 Commands: Manual Page Reference*.

5. Verify that all node2 non-root aggregates are online and their state on node4:

   `storage aggregate show -node <node4> -state offline -root false`

   The node2 aggregates were listed in the output of the command in Step 1.

6. If any aggregate has gone offline or become foreign, bring it online by using the following command for each aggregate:

   `storage aggregate online -aggregate <aggr_name>`

7. Verify that all the volumes in node2 aggregates are online on node4:

   ```
   volume show -node <node4> -state offline
   ```

8. If any volumes are offline on node4, bring them online:

   ```
   volume online -vserver <vserver-name> -volume <volume_name>
   ```

9. Send a post-upgrade AutoSupport message to NetApp for node4:

   ```
   system node autosupport invoke -node <node4> -type all -message "<node2>
   successfully upgraded from <platform_old> to <platform_new>"
   ```

Stage 6. Complete the upgrade

Stage 6. Complete the upgrade

During Stage 6, you confirm that the new nodes are set up correctly. If one of the new nodes has a unified target adapter, you must restore any port configurations and might need to change the personality of the adapter. You also must set up Storage Encryption if the new nodes are encryption-enabled. You also must decommission the old nodes.

1. Ensure that the new controllers are set up correctly
2. Set up Storage Encryption on the new controller module
3. Set up NetApp Encryption on the new controller module
4. Decommission the old system
5. Resume SnapMirror operations

Confirm that the new controllers are set up correctly

To confirm correct setup, you must enable the HA pair. You must also verify that node3 and node4 can access each other's storage and that neither owns data LIFs belonging to other nodes on the cluster. In addition, you must confirm that node3 owns node1's aggregates and that node4 owns node2's aggregates, and that the volumes for both nodes are online.

Steps

1. Enable storage failover by entering the following command on one of the nodes:

   ```
   storage failover modify -enabled true -node <node3>
   ```

2. Verify that storage failover is enabled:

   ```
   storage failover show
   ```

   The following example shows the output of the command when storage failover is enabled:

```
cluster::> storage failover show
                              Takeover
Node           Partner        Possible State Description
-------------- -------------- -------- ------------------
node3          node4          true     Connected to node4
node4          node3          true     Connected to node3
```

3. Take one of the following actions:

If the cluster is a…	Description
Two-node cluster	Enable cluster high availability by entering the following command on either node: `cluster ha modify -configured true`
Cluster with more than two nodes	Go to Step 4.

4. Verify that node3 and node4 belong to the same cluster by entering the following command and examining the output:

   `cluster show`

5. Verify that node3 and node4 can access each other's storage by entering the following command and examining the output:

   `storage failover show -fields local-missing-disks,partner-missing-disks`

6. Verify that neither node3 nor node4 owns data LIFs home-owned by other nodes in the cluster by entering the following command and examining the output:

   `network interface show`

   If either node3 or node4 owns data LIFs home-owned by other nodes in the cluster, use the `network interface revert` command to revert the data LIFs to their home-owner.

7. Verify that node3 owns the aggregates from node1 and that node4 owns the aggregates from node2:

   ```
   storage aggregate show -owner-name <node3>
   storage aggregate show -owner-name <node4>
   ```

8. Determine whether any volumes are offline:

   ```
   volume show -node <node3> -state offline
   volume show -node <node4> -state offline
   ```

9. If any volumes are offline, compare them with the list of offline volumes that you captured in Step 19 (d) in *Prepare the nodes for upgrade*, and bring online any of the offline volumes, as required, by entering the following command, once for each volume:

   `volume online -vserver <vserver_name> -volume <volume_name>`

10. Install new licenses for the new nodes by entering the following command for each node:

    `system license add -license-code <license_code,license_code,license_code…>`

    The license-code parameter accepts a list of 28 upper-case alphabetic character keys. You can add one license at a time, or you can add multiple licenses at once, each license key separated by a comma.

11. If NetApp Storage Encryption (NSE) was in use on the configuration and you set the `setenv bootarg.storageencryption.support` command to "true" with the `kmip.init.maxwait` variable "off" (in Step 16 of *Install and boot node3*), you need to reset the variable:
    `set diag; systemshell -node <node_name> -command sudo kenv -u -p kmip.init.maxwait`

12. To remove all of the old licenses from the original nodes, enter one of the following commands:

    ```
    system license clean-up -unused -expired
    system license delete -serial-number <node_serial_number> -package
    <licensable_package>
    ```

    - To delete all expired licenses, enter:

      `system license clean-up -expired`

    - To delete all unused licenses, enter:

      `system license clean-up -unused`

    - To delete a specific license from a cluster, enter the following commands on the nodes:

      ```
      system license delete -serial-number <node1_serial_number> -package *
      system license delete -serial-number <node2_serial_number> -package *
      ```

      The following output is displayed:

      ```
      Warning: The following licenses will be removed:
      <list of each installed package>
      Do you want to continue? {y|n}: y
      ```

      Enter `y` to remove all of the packages.

13. Verify that the licenses are correctly installed by entering the following command and examining its output:

    `system license show`

    You can compare the output with the output that you captured in Step 30 of *Prepare the nodes for upgrade*.

14. Configure the SPs by performing the following command on both nodes:

    `system service-processor network modify -node <node_name>`

    Go to References to link to the *System Administration Reference* for information about the SPs and the *ONTAP 9 Commands: Manual Page Reference* for detailed information about the `system service-`

`processor network modify` command.

15. Take the following actions on one of the new nodes:
    a. Enter advanced privilege level by entering the following command:

       ```
       set -privilege advanced
       ```

    b. Enter the following command:

       ```
       storage failover modify -node <node-name> -cifs-ndo-duration
       default|medium|low
       ```

       - Enter `medium` if the system will have workloads in which 50 percent to 75 percent of the operations will be 4 KB or smaller.
       - Enter `low` if the system will have workloads in which 75 percent to 100 percent of the operations will be 4 KB or smaller.

    c. Return to the admin level by entering the following command:

       ```
       set -privilege admin
       ```

    d. Reboot the system to confirm that the changes take effect.
16. If you want to set up a switchless cluster on the new nodes, go to References to link to the *Network Support Site* and follow the instructions in *Transitioning to a two-node switchless cluster*.

After you finish

If Storage Encryption is enabled on node3 and node4, complete the steps in Set up Storage Encryption on the new controller module. Otherwise, complete the steps in Decommission the old system.

Set up Storage Encryption on the new controller module

If the replaced controller or the HA partner of the new controller uses Storage Encryption, you must configure the new controller module for Storage Encryption, including installing SSL certificates and setting up key management servers.

About this task

This procedure includes steps that are performed on the new controller module. You must enter the command on the correct node.

Steps

1. Verify that the key management servers are still available, their status, and their authentication key information:

   ```
   security key-manager show -status

   security key-manager query
   ```

2. Add the key management servers listed in the previous step to the key management server list in the new controller.
    a. Add the key management server:

```
security key-manager -add <key_management_server_ip_address>
```

b. Repeat the previous step for each listed key management server.

You can link up to four key management servers.

c. Verify the that the key management servers were added successfully:

```
security key-manager show
```

3. On the new controller module, run the key management setup wizard to set up and install the key management servers.

You must install the same key management servers that are installed on the existing controller module.

a. Launch the key management server setup wizard on the new node:

```
security key-manager setup -node <new_controller_name>
```

b. Complete the steps in the wizard to configure key management servers.

4. Restore authentication keys from all linked key management servers to the new node:

```
security key-manager restore -node <new_controller_name>
```

Set up NetApp Volume Encryption on the new controller module

If the replaced controller or the HA partner of the new controller uses NetApp Volume Encryption (NVE), you must configure the new controller module for NVE.

About this task

This procedure includes steps that are performed on the new controller module. You must enter the command on the correct node.

Steps

1. Verify that the key management servers are still available, their status, and their authentication key information:

For this ONTAP version…	Use this command…
ONTAP 9.6 or 9.7	`security key-manager key query -node node`
ONTAP 9.5 or earlier	`security key-manager key show`

2. Add the key management servers listed in the previous step to the key management server list in the new controller:

a. Add the key management server by using the following command:

```
security key-manager -add <key_management_server_ip_address>
```

b. Repeat the previous step for each listed key management server. You can link up to four key management servers.

c. Verify the that the key management servers were added successfully by using the following command:

```
security key-manager show
```

3. On the new controller module, run the key management setup wizard to set up and install the key management servers.

   You must install the same key management servers that are installed on the existing controller module.

   a. Launch the key management server setup wizard on the new node by using the following command:

      ```
      security key-manager setup -node <new_controller_name>
      ```

   b. Complete the steps in the wizard to configure key management servers.

4. Restore authentication keys from all linked key management servers to the new node.

   - Restore authentication for External Key Manager (EKD):

     ```
     security key-manager external restore
     ```

     This command needs the Onboard Key Manager (OKM) passphrase

   - Restore authentication for OKM:

For this ONTAP version…	Use this command…
All other ONTAP versions	`security key-manager onboard sync`
ONTAP 9.5	`security key-manager setup -node <node_name>`

After you finish

Check if any volumes were taken offline because authentication keys were not available or external key management servers could not be reached. Bring those volumes back online by using the following command:

```
volume online
```

Decommission the old system

After upgrading, you can decommission the old system through the NetApp Support Site. Decommissioning the system tells NetApp that the system is no longer in operation and removes it from support databases.

Steps

1. Refer to References to link to the *NetApp Support Site* and log in.
2. Select **Products > My Products** from the menu.
3. On the **View Installed Systems** page, choose which **Selection Criteria** you want to use to display information about your system.

   You can choose one of the following to locate your system:

   - Serial Number (located on the back of the unit)
   - Serial Numbers for My Location

4. Select **Go!**

A table displays cluster information, including the serial numbers.

5. Locate the cluster in the table and select **Decommission this system** from the Product Tool Set drop-down menu.

Resume SnapMirror operations

You can resume SnapMirror transfers that were quiesced before upgrade and resume the SnapMirror relationships. The updates are on schedule after the upgrade is completed.

Steps

1. Verify the SnapMirror status on the destination:

   ```
   snapmirror show
   ```

2. Resume the SnapMirror relationship:

   ```
   snapmirror resume -destination-vserver <vserver_name>
   ```

Troubleshoot

Troubleshoot

You might encounter a failure while upgrading the node pair. The node might crash, aggregates might not relocate, or LIFs might not migrate. The cause of the failure and its solution depend on when the failure occurred during the upgrade procedure.

Refer to the table describing the different phases of the procedure in the section ARL upgrade workflow. The information about failures that can occur is listed by the phase of the procedure.

- Aggregate relocation failures
- Reboots, panics, or power cycles
- Issues that can arise in multiple stages of the procedure
- LIF migration failure
- LIFs are on invalid ports after upgrade

Aggregate relocation failures

Aggregate relocation (ARL) might fail at different points during the upgrade.

Check for aggregate relocation failure

During the procedure, ARL might fail in Stage 2, Stage 3, or Stage 5.

Steps

1. Enter the following command and examine the output:

   ```
   storage aggregate relocation show
   ```

   The `storage aggregate relocation show` command shows you which aggregates were

successfully relocated and which ones were not, along with the causes of failure.

2. Check the console for any EMS messages.
3. Take one of the following actions:

   - Take the appropriate corrective action, depending on the output of the `storage aggregate relocation show` command and the output of the EMS message.
   - Force relocation of the aggregate or aggregates by using the `override-vetoes` option or the `override-destination-checks` option of the `storage aggregate relocation start` command.

   For detailed information about the `storage aggregate relocation start`, `override-vetoes`, and `override-destination-checks` options, refer to References to link to the *ONTAP 9 Commands: Manual Page Reference*.

Aggregates originally on node1 are owned by node4 after completion of the upgrade

At the end of the upgrade procedure, node3 must be the new home node of aggregates that originally had node1 as the home node. You can relocate them after the upgrade.

About this task

Aggregates might fail to relocate correctly, having node1 as their home node instead of node3 under the following circumstances:

- During Stage 3, when aggregates are relocated from node2 to node3.
  Some of the aggregates being relocated have node1 as their home node. For example, such an aggregate could be called aggr_node_1. If relocation of aggr_node_1 fails during Stage 3, and relocation cannot be forced, then the aggregate will be left behind on node2.
- After Stage 4, when node2 is replaced with node4.
  When node2 is replaced, aggr_node_1 will come online with node4 as its home node instead of node3.

You can fix the incorrect ownership problem after Stage 6 once storage failover has been enabled by completing the following steps:

Steps

1. Enter the following command to get a list of aggregates:

   ```
   storage aggregate show -nodes <node4> -is-home true
   ```

   To identify aggregates that were not correctly relocated, refer to the list of aggregates with the home owner of node1 that you obtained in the section Prepare the nodes for upgrade and compare it with output of the above command.

2. Compare the output of Step 1 with the output you captured for node1 in the section Prepare the nodes for upgrade and note any aggregates that were not correctly relocated.
3. Relocate the aggregates left behind on node4:

   ```
   storage aggregate relocation start -node <node4> -aggr <aggr_node_1>
   -destination <node3>
   ```

   Do not use the `-ndo-controller-upgrade` parameter during this relocation.

4. Enter the following command to verify that node3 is now the home owner of the aggregates:

   `storage aggregate show -aggregate <aggr1,aggr2,aggr3…> -fields home-name`

   `<aggr1,aggr2,aggr3…>` is the list of aggregates that had node1 as the original home owner.

   Aggregates that do not have node3 as home owner can be relocated to node3 using the same relocation command in Step 3.

Reboots, panics, or power cycles

The system might crash – reboot, panic or go through a power cycle – during different stages of the upgrade. The solution to these problems depends on when they occur.

Reboots, panics, or power cycles during Stage 2

Crashes can occur before, during, or immediately after Stage 2, during which you relocate aggregates from node1 to node2, move data LIFs and SAN LIFs owned by node1 to node2, record node1 information, and retire node1.

Node1 or node2 crashes before Stage 2 with HA still enabled

If either node1 or node2 crashes before Stage 2, no aggregates have been relocated yet and the HA configuration is still enabled.

About this task

Takeover and giveback can proceed normally.

Steps

1. Check the console for EMS messages that the system might have issued, and take the recommended corrective action.
2. Continue with the node-pair upgrade procedure.

Node1 crashes during or just after Stage 2 with HA still enabled

Some or all aggregates have been relocated from node1 to node2, and HA is still enabled. Node2 will take over node1's root volume and any non-root aggregates that were not relocated.

About this task

Ownership of aggregates that were relocated looks the same as the ownership of non-root aggregates that were taken over because home owner has not changed.
When node1 enters the `waiting for giveback state`, node2 will give back all the node1 non-root aggregates.

Steps

1. Complete Step 1 in the section *Relocate non-root aggregates from node1 to node2* again.
2. Continue with the node-pair upgrade procedure.

Node1 crashes after Stage 2 while HA is disabled

Node2 will not take over but it is still serving data from all non-root aggregates.

Steps

1. Bring up node1.
2. Continue with the node-pair upgrade procedure.

   You might see some changes in the output of the `storage failover show` command, but that is typical and does not affect the procedure. See the troubleshooting section Unexpected storage failover show command output.

Node2 fails during or after Stage 2 with HA still enabled

Node1 has relocated some or all of its aggregates to node2. HA is enabled.

About this task

Node1 will take over all of node2's aggregates as well any of its own aggregates that it had relocated to node2. When node2 enters the `Waiting for Giveback` state, node1 gives back all of node2's aggregates.

Steps

1. Complete Step 1 in the section *Relocate non-root aggregates from node1 to node2* again.
2. Continue with the node-pair upgrade procedure.

Node2 crashes after Stage 2 and after HA is disabled

Node1 will not take over.

Steps

1. Bring up node2.

   A client outage will occur for all aggregates while node2 is booting up.

2. Continue with the rest of the node pair upgrade procedure.

Reboots, panics, or power cycles during Stage 3

Failures can occur during or immediately after Stage 3, during which you install and boot node3, map ports from node1 to node3, move data LIFs and SAN LIFs belonging to node1 and node2 to node3, and relocate all aggregates from node2 to node3.

Node2 crash during Stage 3 with HA disabled and before relocating any aggregates

Node3 will not take over following a node2 crash as HA is already disabled.

Steps

1. Bring up node2.

   A client outage will occur for all aggregates while node2 is booting up.

2. Continue with the node-pair upgrade procedure.

Node2 crashes during Stage 3 after relocating some or all aggregates

Node2 has relocated some or all of its aggregates to node3, which will serve data from aggregates that were relocated. HA is disabled.

About this task

There will be client outage for aggregates that were not relocated.

Steps

1. Bring up node2.
2. Relocate the remaining aggregates by completing Step 1 through Step 3 in the section *Relocate non-root aggregates from node2 to node3*.
3. Continue with the node-pair upgrade procedure.

Node3 crashes during Stage 3 and before node2 has relocated any aggregates

Node2 does not take over but it is still serving data from all non-root aggregates.

Steps

1. Bring up node3.
2. Continue with the node-pair upgrade procedure.

Node3 crashes during Stage 3 during aggregate relocation

If node3 crashes while node2 is relocating aggregates to node3, node2 will abort the relocation of any remaining aggregates.

About this task

Node2 continues to serve remaining aggregates, but aggregates that were already relocated to node3 encounter client outage while node3 is booting.

Steps

1. Bring up node3.
2. Complete Step 3 again in the section *Relocate non-root aggregates from node2 to node3*.
3. Continue with the node-pair upgrade procedure.

Node3 fails to boot after crashing in Stage 3

Because of a catastrophic failure, node3 cannot be booted following a crash during Stage 3.

Step

1. Contact technical support.

Node2 crashes after Stage 3 but before Stage 5

Node3 continues to serve data for all aggregates. The HA pair is disabled.

Steps

1. Bring up node2.
2. Continue with the node-pair upgrade procedure.

Node3 crashes after Stage 3 but before Stage 5

Node3 crashes after Stage 3 but before Stage 5. The HA pair is disabled.

Steps

1. Bring up node3.

   There will be a client outage for all aggregates.

2. Continue with the node-pair upgrade procedure.

Reboots, panics, or power cycles during Stage 5

Crashes can occur during Stage 5, the stage in which you install and boot node4, map ports from node2 to node4, move data LIFs and SAN LIFs belonging to node2 from node3 to node4, and relocate all of node2's aggregates from node3 to node4.

Node3 crashes during Stage 5

Node3 has relocated some or all of node2's aggregates to node4. Node4 does not take over but continues to serve non-root aggregates that node3 already relocated. The HA pair is disabled.

About this task

There is an outage for the rest of the aggregates until node3 boots again.

Steps

1. Bring up node3.
2. Relocate the remaining aggregates that belonged to node2 by repeating Step 1 through Step 3 in the section *Relocate node2's non-root aggregates from node3 to node4*.
3. Continue with the node pair upgrade procedure.

Node4 crashes during Stage 5

Node3 has relocated some or all of node2's aggregates to node4. Node3 does not take over but continues to serve non-root aggregates that node3 owns as well as those that were not relocated. HA is disabled.

About this task

There is an outage for non-root aggregates that were already relocated until node4 boots again.

Steps

1. Bring up node4.
2. Relocate the remaining aggregates that belonged to node2 by again completing Step 1 through Step 3 in *Relocate node2's non-root aggregates from node3 to node4*.
3. Continue with the node-pair upgrade procedure.

Issues that can arise in multiple stages of the procedure

Some issues can occur during different stages of the procedure.

Unexpected "storage failover show" command output

During the procedure, if the node that hosts all data aggregates panics or is rebooted accidentally, you might see unexpected output for the `storage failover show` command before and after the reboot, panic, or power cycle.

About this task

You might see unexpected output from the `storage failover show` command in Stage 2, Stage 3, Stage 4, or Stage 5.

The following example shows the expected output of the `storage failover show` command if there are no reboots or panics on the node that hosts all the data aggregates:

```
cluster::> storage failover show

                    Takeover
Node     Partner    Possible  State Description
-------  --------   --------- -----------------
node1    node2      false     Unknown
node2    node1      false     Node owns partner aggregates as part of the
non-disruptive head upgrade procedure. Takeover is not possible: Storage
failover is disabled.
```

The following example shows the output of the `storage failover show` command after a reboot or panic:

```
cluster::> storage failover show

                    Takeover
Node     Partner    Possible  State Description
-------  --------   --------- -----------------
node1    node2      -         Unknown
node2    node1     false      Waiting for node1, Partial giveback, Takeover
is not possible: Storage failover is disabled
```

Although the output says that a node is in partial giveback and that storage failover is disabled, you can disregard this message.

Steps

No action is required; continue with the node-pair upgrade procedure.

LIF migration failure

After you migrate LIFs, they might not come online after migration in Stage 2, Stage 3, or Stage 5.

Steps

1. Verify that the port MTU size is the same as that of the source node.

   For example, if the cluster port MTU size is 9000 on the source node, it should be 9000 on the destination node.

2. Check the physical connectivity of the network cable if the physical state of the port is "down".

LIFs are on invalid ports after upgrade

After the upgrade is completed, the FC logical interfaces (LIFs) might be left on incorrect ports if you have a MetroCluster configuration. You can perform a resync operation to reassign the LIFs to the correct ports.

Step

1. Enter the `metrocluster vserver resync` command to reallocate the LIFs to the correct ports.

```
metrocluster vserver resync -vserver <vserver_name> fcp-mc.headupgrade.test.vs
```

References

When performing the procedures in this content, you might need to consult reference content or go to reference websites.

- Reference content
- Reference sites

Reference content

Content specific to this upgrade are listed in the table below.

Content	Description
Administration overview with the CLI	Describes how to administer ONTAP systems, shows you how to use the CLI interface, how to access the cluster, how to manage nodes, and much more.
Decide whether to use System Manager or the ONTAP CLI for cluster setup	Describes how to set up and configure ONTAP.
Disk and aggregate management with the CLI	Describes how to manage ONTAP physical storage using the CLI. It shows you how to create, expand, and manage aggregates, how to work with Flash Pool aggregates, how to manage disks, and how to manage RAID policies.
Fabric-attached MetroCluster Installation and Configuration	Describes how to install and configure the MetroCluster hardware and software components in a fabric configuration.
FlexArray Virtualization Installation Requirements and Reference	Contains cabling instructions and other information for FlexArray Virtualization systems.
High Availability management	Describes how to install and manage high-availability clustered configurations, including storage failover and takeover/giveback.
Logical storage management with the CLI	Describes how to efficiently manage your logical storage resources, using volumes, FlexClone volumes, files, and LUNs, FlexCache volumes, deduplication, compression, qtrees, and quotas.
MetroCluster Management and Disaster Recovery	Describes how to perform MetroCluster switchover and switchback operations, both in planned maintenance operations, or in the event of a disaster.

Content	Description
MetroCluster Upgrade and Expansion	Provides procedures for upgrading controller and storage models in the MetroCluster configuration, transitioning from a MetroCluster FC to a MetroCluster IP configuration, and expanding the MetroCluster configuration by adding additional nodes.
Network Management	Describes how to configure and manage physical and virtual network ports (VLANs and interface groups), LIFs, routing, and host-resolution services in clusters; optimize network traffic by load balancing; and monitor the cluster by using SNMP.
ONTAP 9.0 Commands: Manual Page Reference	Describes syntax and usage of supported ONTAP 9.0 commands.
ONTAP 9.1 Commands: Manual Page Reference	Describes syntax and usage of supported ONTAP 9.1 commands.
ONTAP 9.2 Commands: Manual Page Reference	Describes syntax and usage of supported ONTAP 9.2 commands.
ONTAP 9.3 Commands: Manual Page Reference	Describes syntax and usage of supported ONTAP 9.3 commands.
ONTAP 9.4 Commands: Manual Page Reference	Describes syntax and usage of supported ONTAP 9.4 commands.
ONTAP 9.5 Commands: Manual Page Reference	Describes syntax and usage of supported ONTAP 9.5 commands.
ONTAP 9.6 Commands: Manual Page Reference	Describes syntax and usage of supported ONTAP 9.6 commands.
ONTAP 9.7 Commands: Manual Page Reference	Describes syntax and usage of supported ONTAP 9.7 commands.
ONTAP 9.8 Commands: Manual Page Reference	Describes syntax and usage of supported ONTAP 9.8 commands.
ONTAP 9.9.1 Commands: Manual Page Reference	Describes syntax and usage of supported ONTAP 9.9.1 commands.
ONTAP 9.10.1 Commands: Manual Page Reference	Describes syntax and usage of supported ONTAP 9.10.1 commands.
SAN management with the CLI	Describes how to configure and manage LUNs, igroups, and targets using the iSCSI and FC protocols, and namespaces and subsystems using the NVMe/FC protocol.
SAN configuration reference	Contains information about FC and iSCSI topologies and wiring schemes.
Upgrade by moving volumes or storage	Describes how to quickly upgrade controller hardware in a cluster by moving storage or volumes. Also describes how to convert a supported model to a disk shelf.
Upgrade ONTAP	Contains instructions for downloading and upgrading ONTAP.

Content	Description
Use "system controller replace" commands to upgrade AFF A700 to AFF A900 running ONTAP 9.10.1 or later	Describes the aggregate relocation procedures needed to non-disruptively upgrade an AFF A700 to an AFF A900 running ONTAP 9.10.1 or later by using "system controller replace" commands.
Use "system controller replace" commands to upgrade controller hardware running ONTAP 9.8 or later	Describes the aggregate relocation procedures needed to non-disruptively upgrade controllers running ONTAP 9.8 by using "system controller replace" commands.
Use aggregate relocation to manually upgrade controller hardware running ONTAP 9.8 or later	Describes the aggregate relocation procedures needed to perform manual non-disruptive controller upgrades running ONTAP 9.8 or later.
Use "system controller replace" commands to upgrade controller hardware running ONTAP 9.5 to ONTAP 9.7	Describes the aggregate relocation procedures needed to non-disruptively upgrade controllers running ONTAP 9.5 to ONTAP 9.7 by using "system controller replace" commands.
Use aggregate relocation to manually upgrade controller hardware running ONTAP 9.7 or earlier	Describes the aggregate relocation procedures needed to perform manual non-disruptive controller upgrades running ONTAP 9.7 or earlier.

Reference sites

The NetApp Support Site also contains documentation about network interface cards (NICs) and other hardware that you might use with your system. It also contains the Hardware Universe, which provides information about the hardware that the new system supports.

Access ONTAP 9 documentation.

Access the Active IQ Config Advisor tool.

Copyright Information

Copyright © 2022 NetApp, Inc. All rights reserved. Printed in the U.S. No part of this document covered by copyright may be reproduced in any form or by any means-graphic, electronic, or mechanical, including photocopying, recording, taping, or storage in an electronic retrieval system-without prior written permission of the copyright owner.

Software derived from copyrighted NetApp material is subject to the following license and disclaimer:

THIS SOFTWARE IS PROVIDED BY NETAPP “AS IS” AND WITHOUT ANY EXPRESS OR IMPLIED WARRANTIES, INCLUDING, BUT NOT LIMITED TO, THE IMPLIED WARRANTIES OF MERCHANTABILITY AND FITNESS FOR A PARTICULAR PURPOSE, WHICH ARE HEREBY DISCLAIMED. IN NO EVENT SHALL NETAPP BE LIABLE FOR ANY DIRECT, INDIRECT, INCIDENTAL, SPECIAL, EXEMPLARY, OR CONSEQUENTIAL DAMAGES (INCLUDING, BUT NOT LIMITED TO, PROCUREMENT OF SUBSTITUTE GOODS OR SERVICES; LOSS OF USE, DATA, OR PROFITS; OR BUSINESS INTERRUPTION) HOWEVER CAUSED AND ON ANY THEORY OF LIABILITY, WHETHER IN CONTRACT, STRICT LIABILITY, OR TORT (INCLUDING NEGLIGENCE OR OTHERWISE) ARISING IN ANY WAY OUT OF THE USE OF THIS SOFTWARE, EVEN IF ADVISED OF THE POSSIBILITY OF SUCH DAMAGE.

NetApp reserves the right to change any products described herein at any time, and without notice. NetApp assumes no responsibility or liability arising from the use of products described herein, except as expressly agreed to in writing by NetApp. The use or purchase of this product does not convey a license under any patent rights, trademark rights, or any other intellectual property rights of NetApp.

The product described in this manual may be protected by one or more U.S. patents, foreign patents, or pending applications.

RESTRICTED RIGHTS LEGEND: Use, duplication, or disclosure by the government is subject to restrictions as set forth in subparagraph (c)(1)(ii) of the Rights in Technical Data and Computer Software clause at DFARS 252.277-7103 (October 1988) and FAR 52-227-19 (June 1987).

Trademark Information

NETAPP, the NETAPP logo, and the marks listed at http://www.netapp.com/TM are trademarks of NetApp, Inc. Other company and product names may be trademarks of their respective owners.