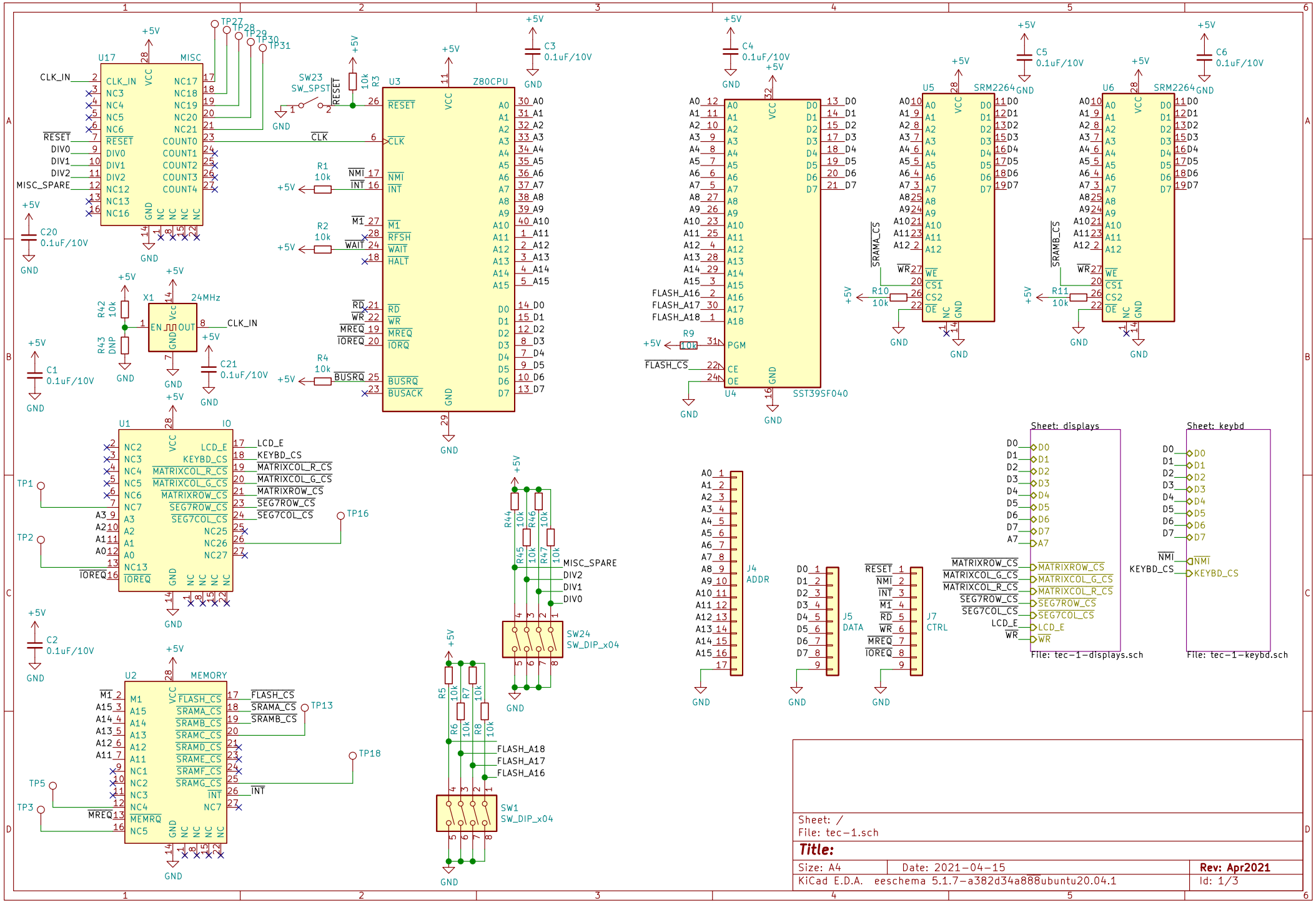
U17 MISC
U3 Z80CPU
U4 SST39SF040
U5 SRM2264
U6 SRM2264
U1 IO
U2 MEMORY
X1 24MHz
J4 ADDR
J5 DATA
J7 CTRL
SW23 SW_SPST
SW24 SW_DIP_x04
SW1 SW_DIP_x04
Sheet: displays
File: tec-1-displays.sch
Sheet: keybd
File: tec-1-keybd.sch
Sheet: /
File: tec-1.sch
Title:
Size: A4
Date: 2021-04-15
Rev: Apr2021
KiCad E.D.A. eeschema 5.1.7-a382d34a888ubuntu20.04.1
Id: 1/3

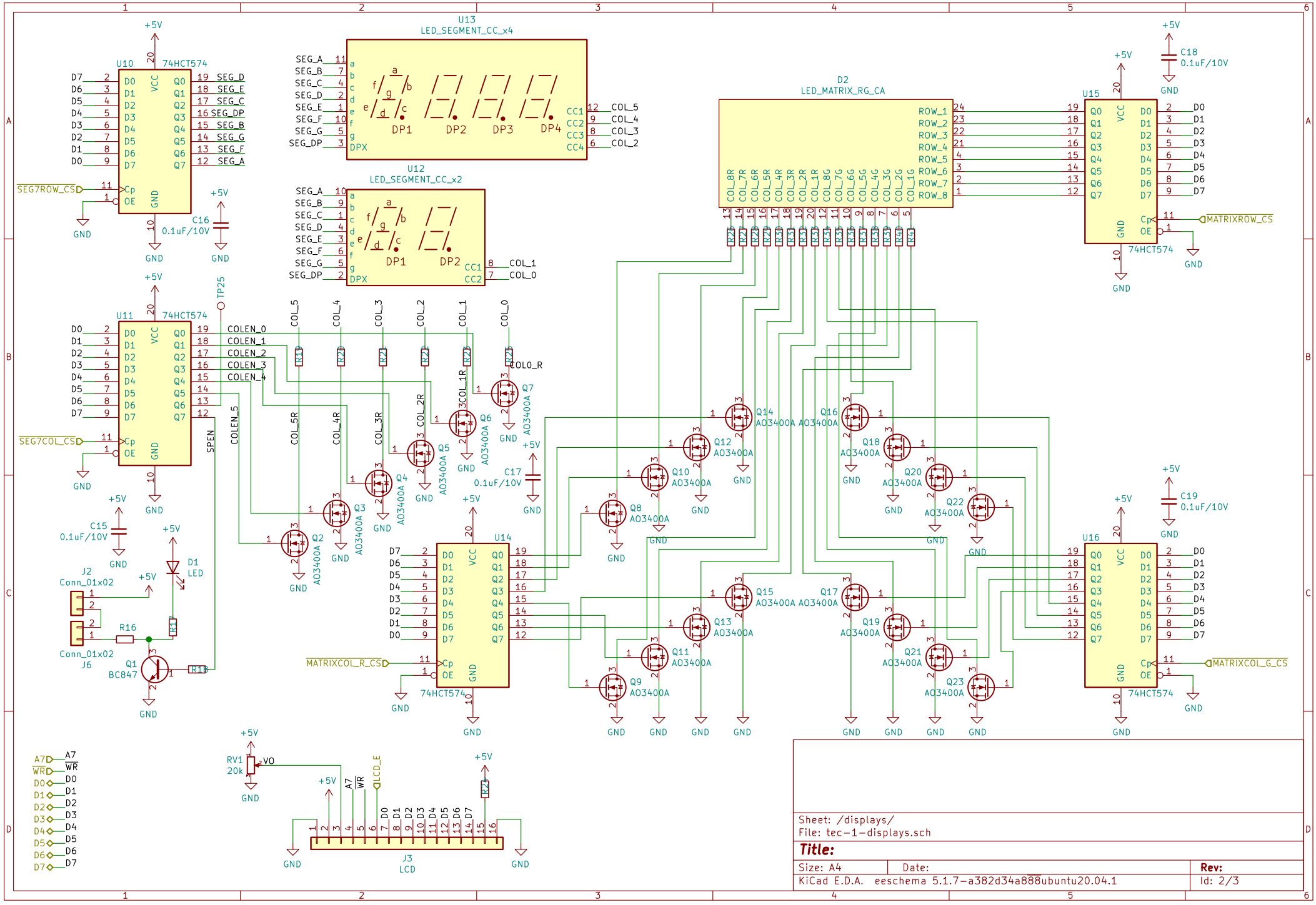
U13
LED_SEGMENT_CC_x4
U12
LED_SEGMENT_CC_x2
D2
LED_MATRIX_RG_CA
U10
74HCT574
U11
74HCT574
U14
74HCT574
U15
74HCT574
U16
74HCT574
SEG7ROW_CS
SEG7COL_CS
MATRIXROW_CS
MATRIXCOL_R_CS
MATRIXCOL_G_CS
COLEN_0
COLEN_1
COLEN_2
COLEN_3
COLEN_4
COLEN_5
SPEN
COL_R
J2
Conn_01x02
J6
Conn_01x02
Q1
BC847
D1
LED
RV1
20k
J3
LCD
LCD_E
+5V
GND
Sheet: /displays/
File: tec-1-displays.sch
Title:
Size: A4
Date:
Rev:
KiCad E.D.A. eeschema 5.1.7-a382d34a888ubuntu20.04.1
Id: 2/3

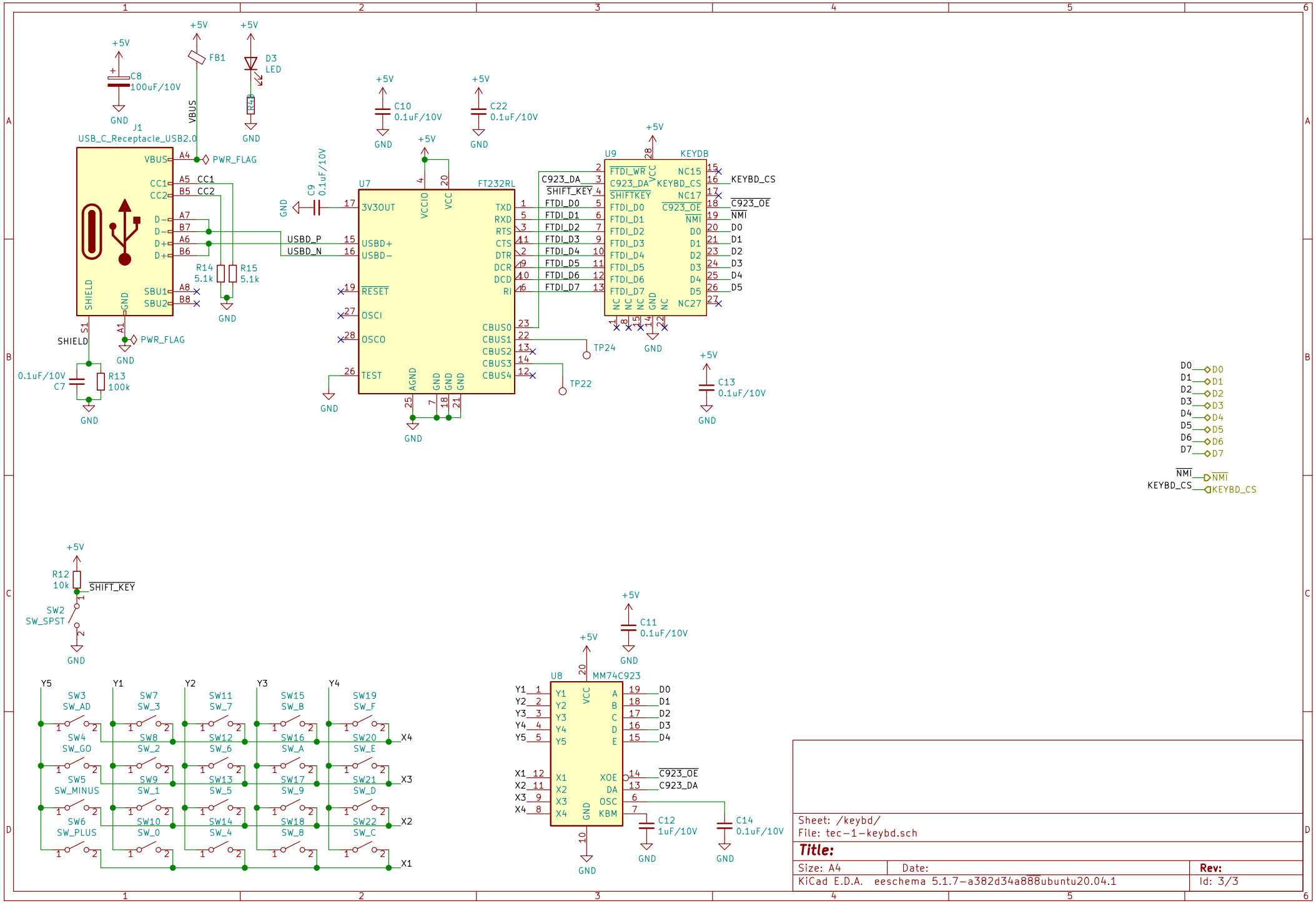
J1
USB_C_Receptacle_USB2.0
VBUS
CC1
CC2
D−
D+
SHIELD
GND
SBU1
SBU2
PWR_FLAG
FB1
D3
LED
R10
C8
100uF/10V
R14
5.1k
R15
5.1k
C7
0.1uF/10V
R13
100k
C9
0.1uF/10V
C10
0.1uF/10V
C22
0.1uF/10V
U7
FT232RL
3V3OUT
USBD+
USBD−
RESET
OSCI
OSCO
TEST
VCCIO
VCC
AGND
TXD
RXD
RTS
CTS
DTR
DCR
DCD
RI
CBUS0
CBUS1
CBUS2
CBUS3
CBUS4
USBD_P
USBD_N
TP24
TP22
U9
KEYDB
FTDI_WR
C923_DA
SHIFTKEY
FTDI_D0
FTDI_D1
FTDI_D2
FTDI_D3
FTDI_D4
FTDI_D5
FTDI_D6
FTDI_D7
KEYBD_CS
C923_OE
NMI
D0
D1
D2
D3
D4
D5
NC15
NC17
NC27
C13
0.1uF/10V
R12
10k
SHIFT_KEY
SW2
SW_SPST
Y5
Y1
Y2
Y3
Y4
SW3
SW_AD
SW7
SW_3
SW11
SW_7
SW15
SW_B
SW19
SW_F
SW4
SW_GO
SW8
SW_2
SW12
SW_6
SW16
SW_A
SW20
SW_E
SW5
SW_MINUS
SW9
SW_1
SW13
SW_5
SW17
SW_9
SW21
SW_D
SW6
SW_PLUS
SW10
SW_0
SW14
SW_4
SW18
SW_8
SW22
SW_C
X1
X2
X3
X4
U8
MM74C923
VCC
A
B
C
D
E
XOE
DA
OSC
KBM
C11
0.1uF/10V
C12
1uF/10V
C14
0.1uF/10V
Sheet: /keybd/
File: tec−1−keybd.sch
Title:
Size: A4
Date:
Rev:
KiCad E.D.A. eeschema 5.1.7−a382d34a888ubuntu20.04.1
Id: 3/3