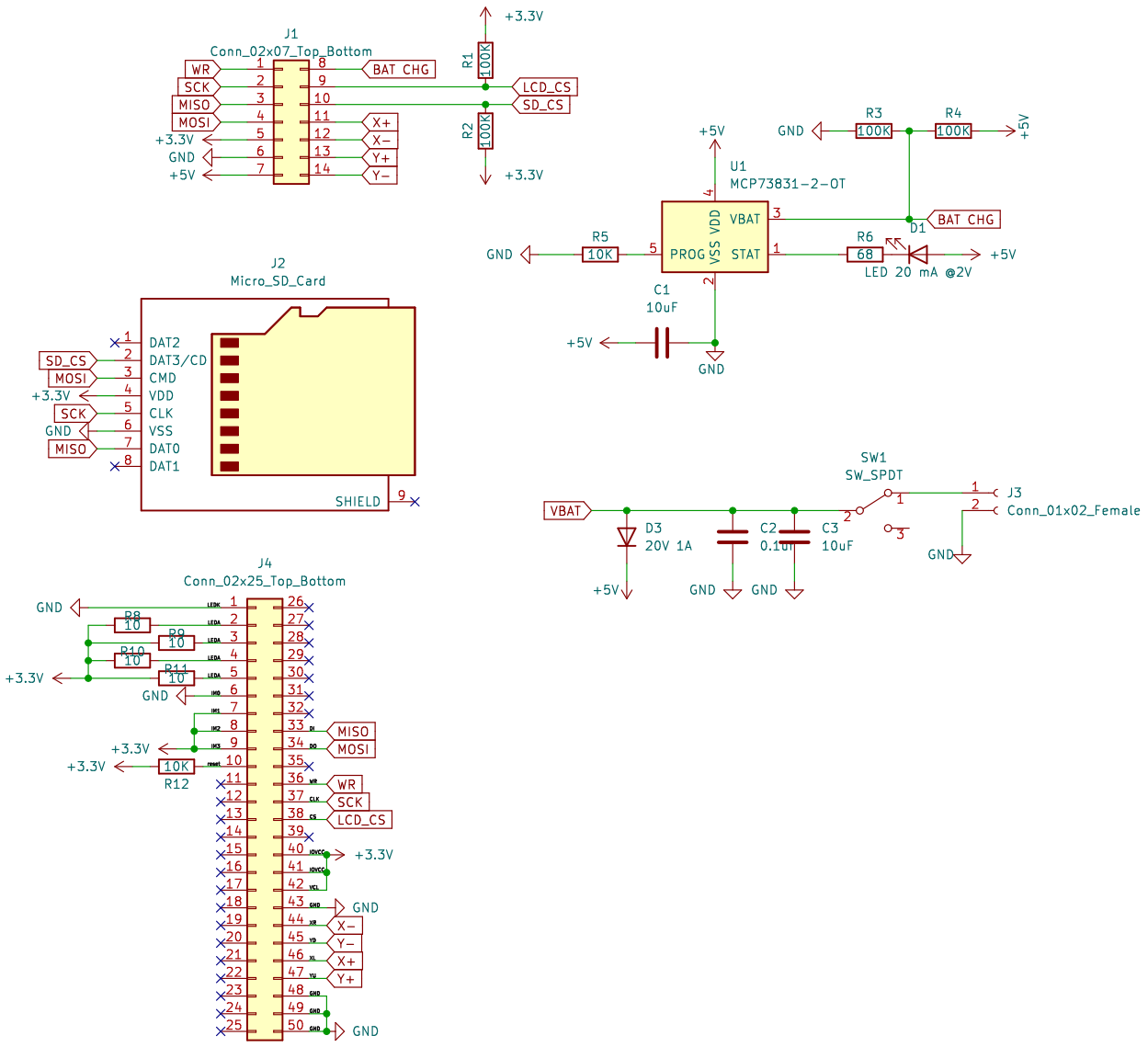
J1
Conn_02x07_Top_Bottom
WR
SCK
MISO
MOSI
+3.3V
GND
+5V
BAT CHG
LCD_CS
SD_CS
X+
X−
Y+
Y−
R1
100K
R2
100K
+3.3V
+3.3V
J2
Micro_SD_Card
SD_CS
MOSI
+3.3V
SCK
GND
MISO
DAT2
DAT3/CD
CMD
VDD
CLK
VSS
DAT0
DAT1
SHIELD
U1
MCP73831-2-OT
+5V
GND
R3
100K
R4
100K
+5V
VDD
VBAT
PROG
VSS
STAT
BAT CHG
D1
R5
10K
R6
68
LED 20 mA @2V
+5V
C1
10uF
+5V
GND
SW1
SW_SPDT
VBAT
D3
20V 1A
C2
0.1uF
C3
10uF
+5V
GND
GND
J3
Conn_01x02_Female
GND
J4
Conn_02x25_Top_Bottom
GND
R8
10
R9
10
R10
10
R11
10
+3.3V
GND
+3.3V
+3.3V
10K
R12
MISO
MOSI
WR
SCK
LCD_CS
+3.3V
GND
X−
Y−
X+
Y+
GND