ESP32

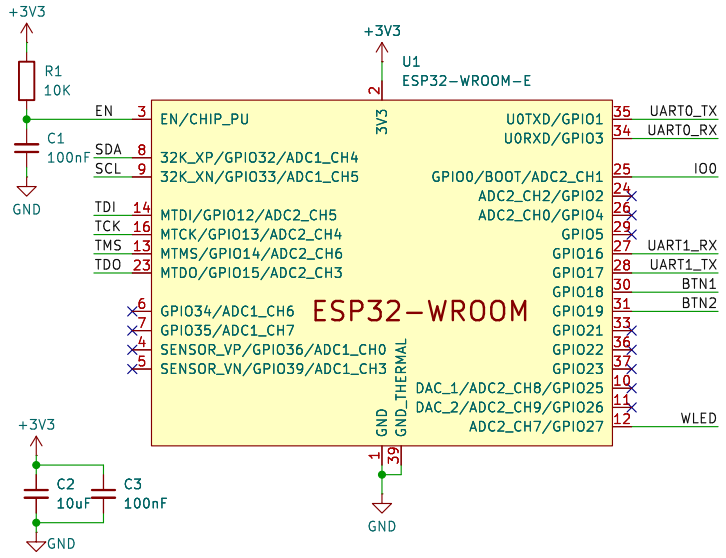

Programming & JTAG

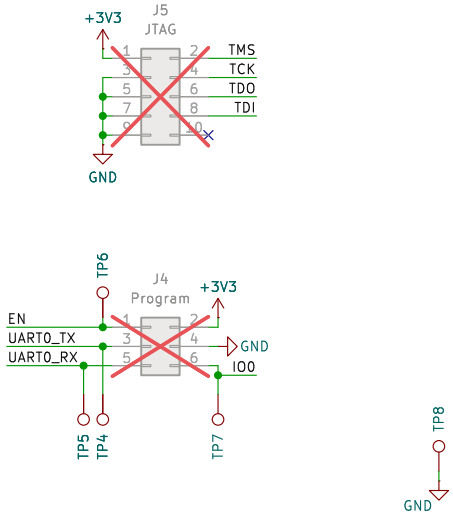

Status LED

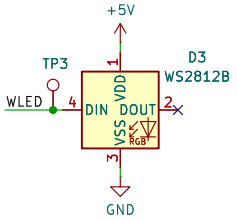

I²C display

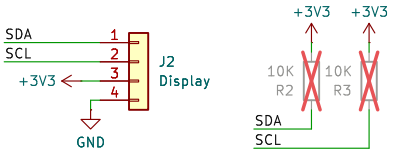

Buttons

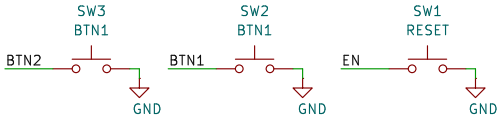

Power Conversion

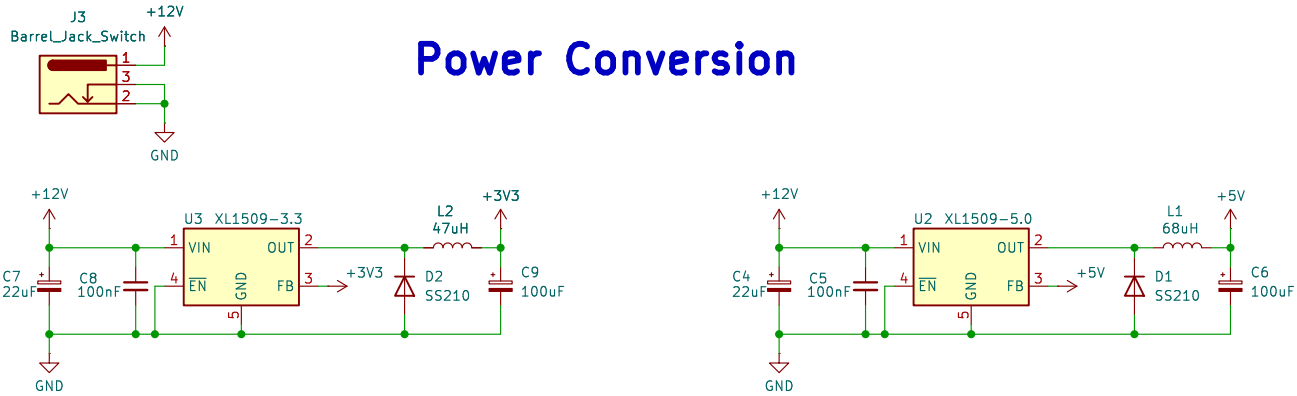

UART level shifter

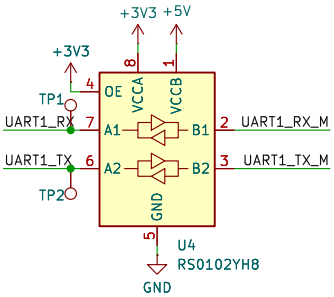

Module Connector

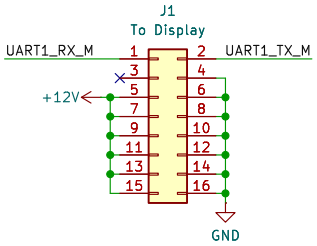

+12V +5V +3V3 GND

H1 MountingHole

H2 MountingHole

Designer: Toon Van Eyck
Repo: github.com/ToonVanEyck/OpenFlap
Commit: v0.0.0-unstable-47-gec30af7-dirty
OpenFlap

Sheet: /
File: controller.kicad_sch

Title: Controller

Size: A4	Date: 2025-01-16	**Rev: 2.0.4 DEV**
KiCad E.D.A. 8.0.6		Id: 1/1