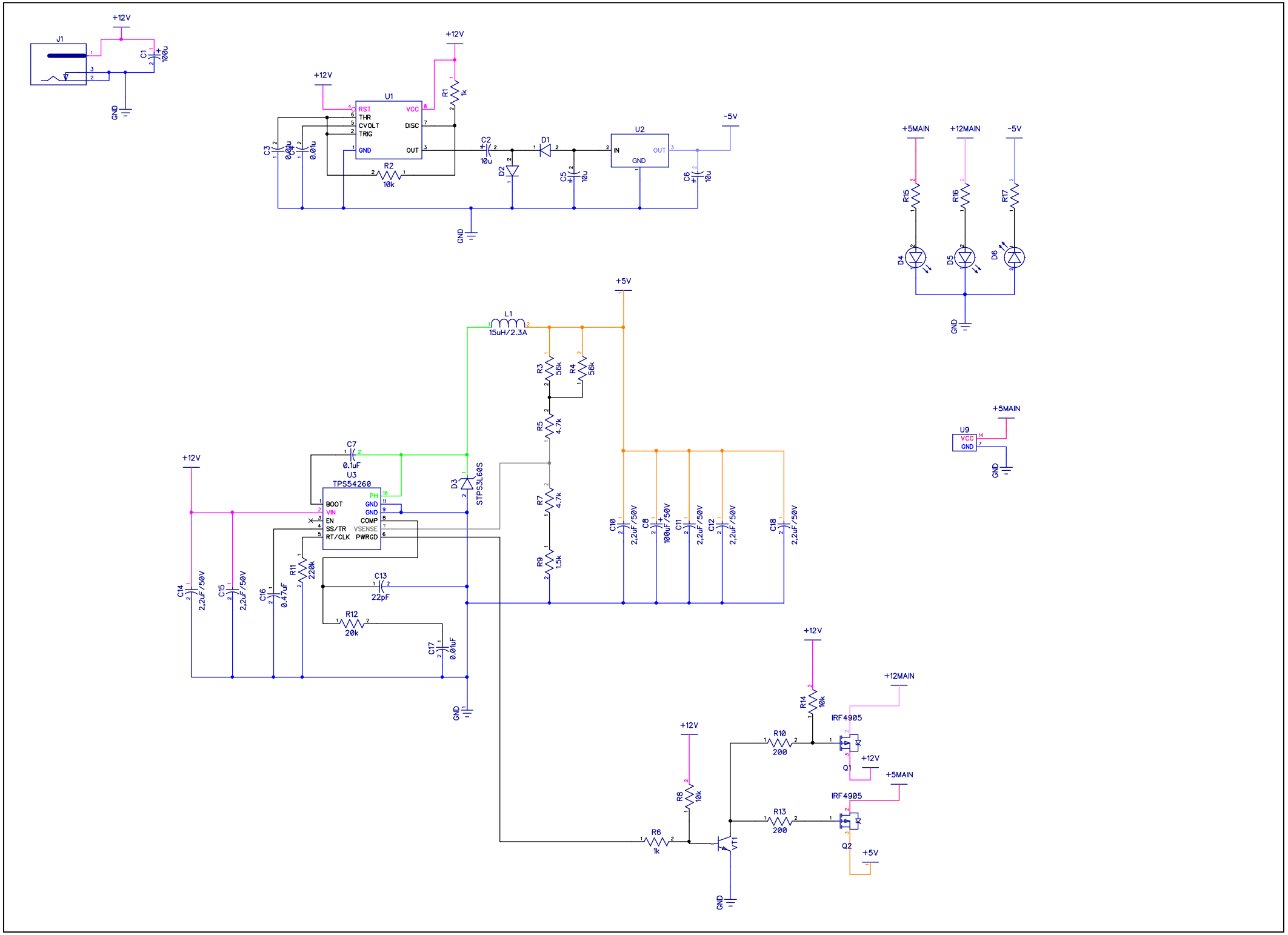
J1
+12V
C1
100u
GND
U1
RST
THR
CVOLT
TRIG
GND
VCC
DISC
OUT
R1
1k
R2
10k
C3
0.01u
C2
10u
D1
D2
C5
10u
U2
IN
OUT
GND
-5V
C6
10u
+5MAIN
+12MAIN
R15
R16
R17
D4
D5
D6
L1
15uH/2.3A
+5V
R3
56k
R4
56k
R5
4.7k
R7
4.7k
R9
1.5k
C7
0.1uF
U3
TPS54260
BOOT
VIN
EN
SS/TR
RT/CLK
PH
GND
COMP
VSENSE
PWRGD
D3
STPS3L60S
C10
2.2uF/50V
C8
100uF/50V
C11
2.2uF/50V
C12
2.2uF/50V
C18
2.2uF/50V
C14
2.2uF/50V
C15
2.2uF/50V
C16
0.47uF
R11
220k
C13
22pF
R12
20k
C17
0.01uF
U9
VCC
GND
R14
10k
IRF4905
R10
200
Q1
R13
200
Q2
R8
10k
R6
1k
VT1

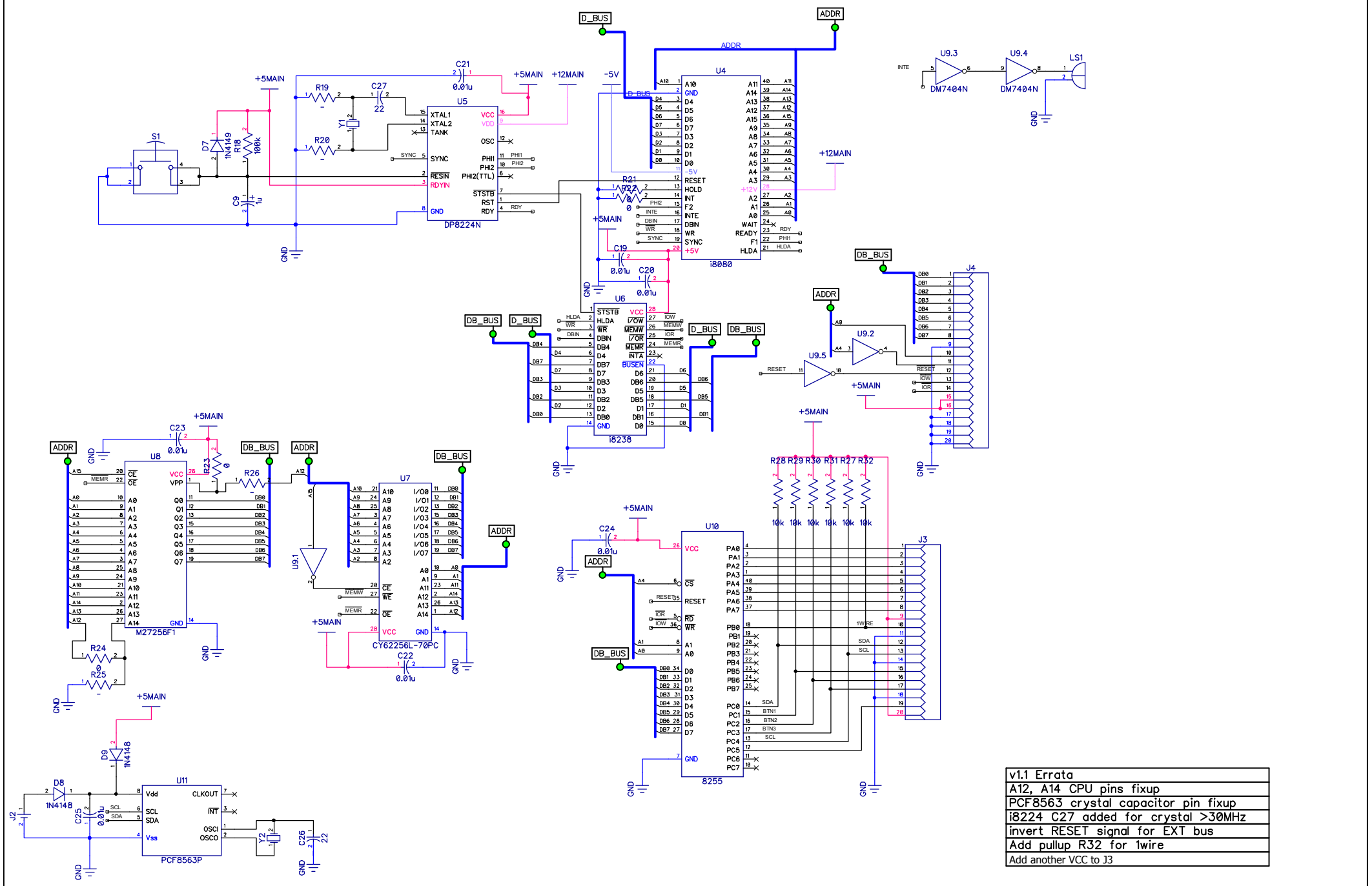

v1.1 Errata
A12, A14 CPU pins fixup
PCF8563 crystal capacitor pin fixup
i8224 C27 added for crystal >30MHz
invert RESET signal for EXT bus
Add pullup R32 for 1wire
Add another VCC to J3