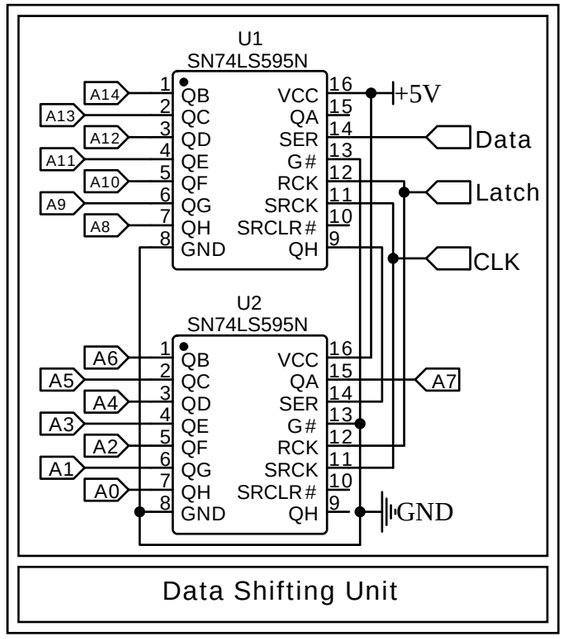

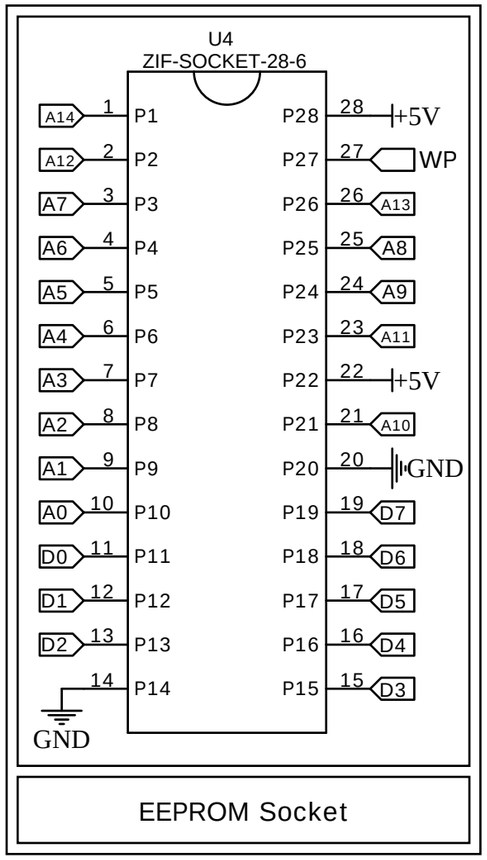

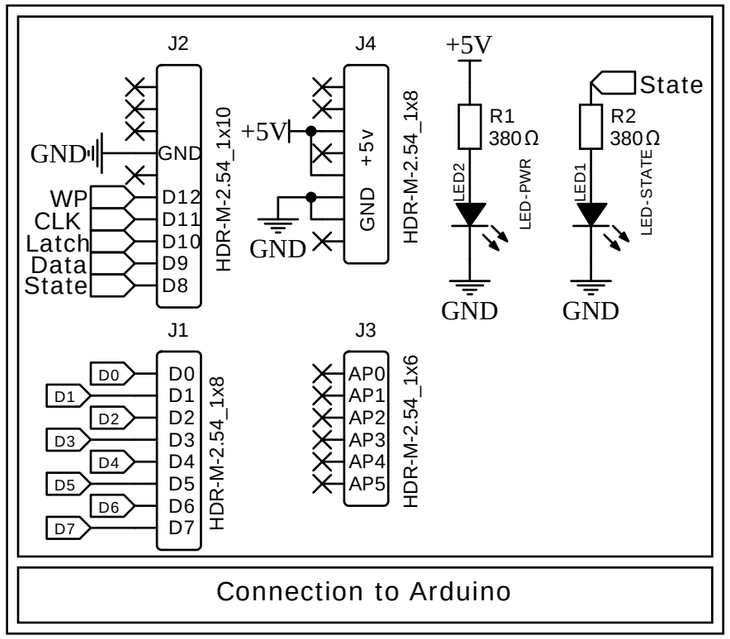

TITLE: Arduino UNO R3 Shield AT26C Programmer		REV: 3.0
Supică T.	Company: Black Mesa Research Facility	Sheet: 1/1
	Date: 26/04/2024 Drawn By: Tudor S.	