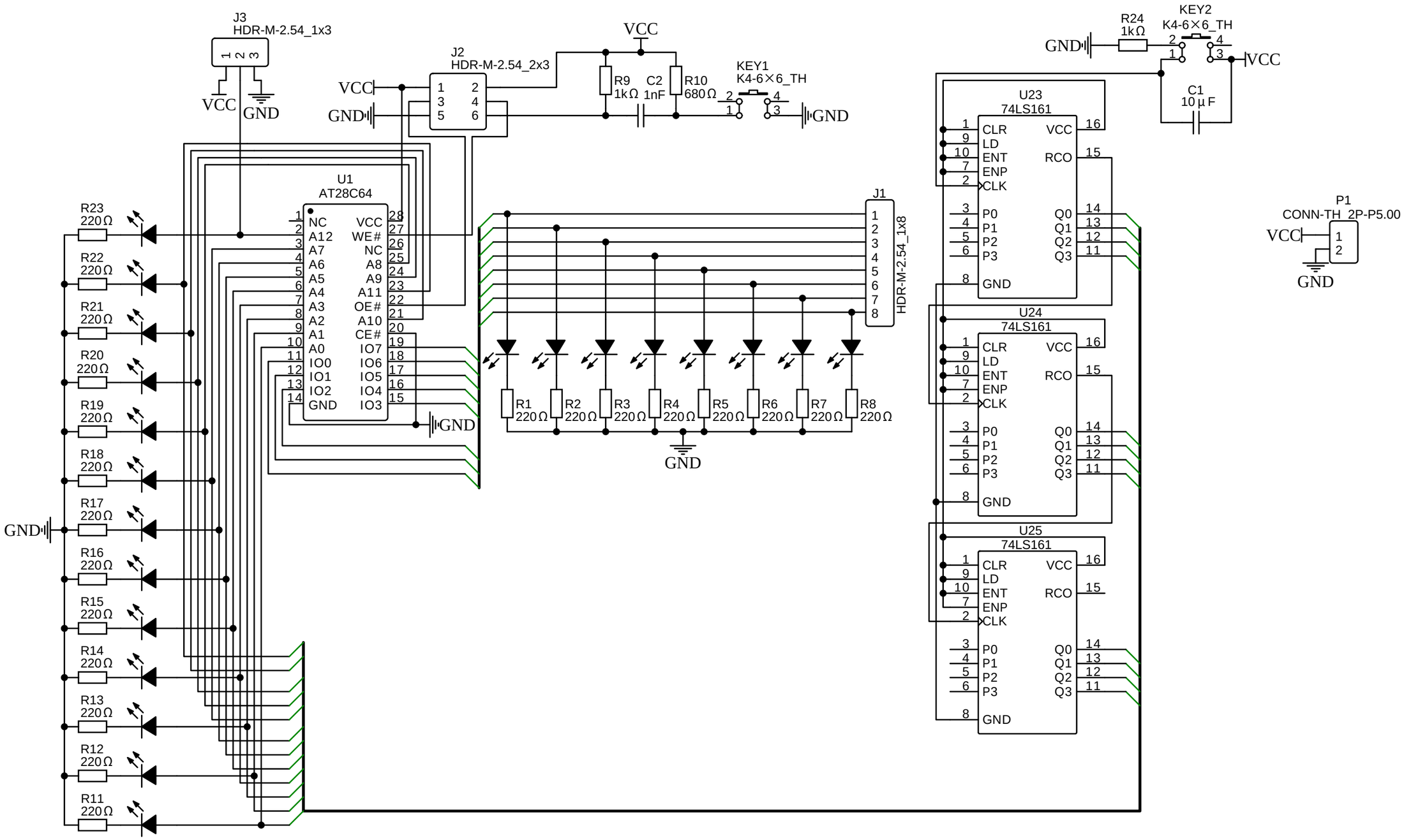

TITLE: AT28C64 Programmer		REV: 1.0
Lupică T.	Company: Black Mesa Research Facility	Sheet: 1/1
	Date: 2023-06-25 Drawn By: Tudor S.	