ITEM NO.	SW-FILE NAME(FILE NAME)	QTY.
1	7146_TYMPAN_REV-F_TOP_CASE_NOLABEL	1
2	7146_TYMPAN_REV-F_BOTTOM_CASE_NOLABEL	1
3	TYMPAN_REV-F_TEENSY_4-1_ASSY_SAVED_AS_PART	1
4	BATTERY_JOEL_IMPORT_2000MAH_103450	1
5	94459A439_HEATSET_INSERT_M2.5	3
6	91755A325_RETAINING_WASHER_M2-5	3
7	SCREW_PH-OVAL_M2500_045_10MM_LG_SS_MCMASTER_90258A115	3
8	LIGHTPIPE_3mm-DIA_0188IN_COUNTERSINK_BIVAR_51513130188F	2
9	LIGHTPIPE_2mm_SQ_0188LG_COUNTERSUNK_BIVAR_PLPQ2-188-FF	1
10	LIGHTPIPE_2mm_SQ_0100LG_COUNTERSUNK_BIVAR_PLPQ2-100-FF	1
11	86375K131_NEOPRENE_031_THK	1

ZONE	REV.	DESCRIPTION	DATE REV'D	REV'D BY
ALL	A	INITIAL RELEASE OF TYMPAN REV-E ENCLOSURE	9/4/2024	EYUAN
C2	B	ADDED FOAM TO BATTERY	9/4/2024	EYUAN
ALL	C	ADD BOARD SUPPORTS; DEEPER INSERTS	9/9/2024	EYUAN

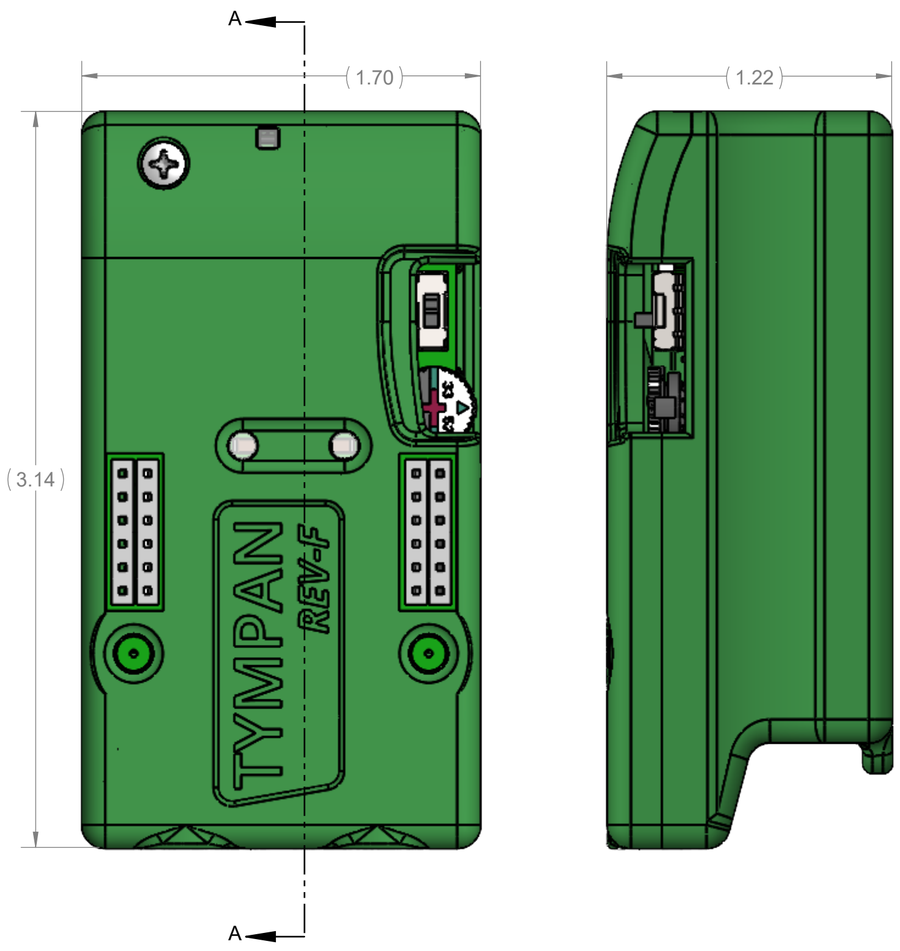

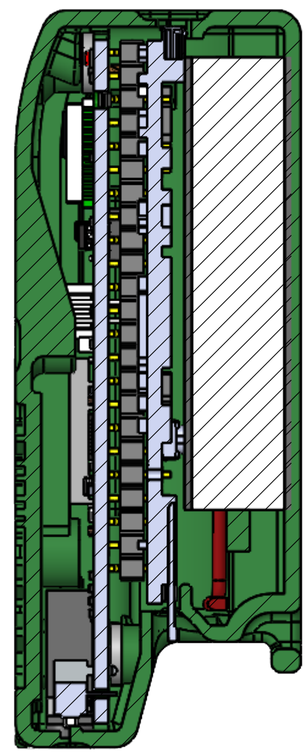

SECTION A-A

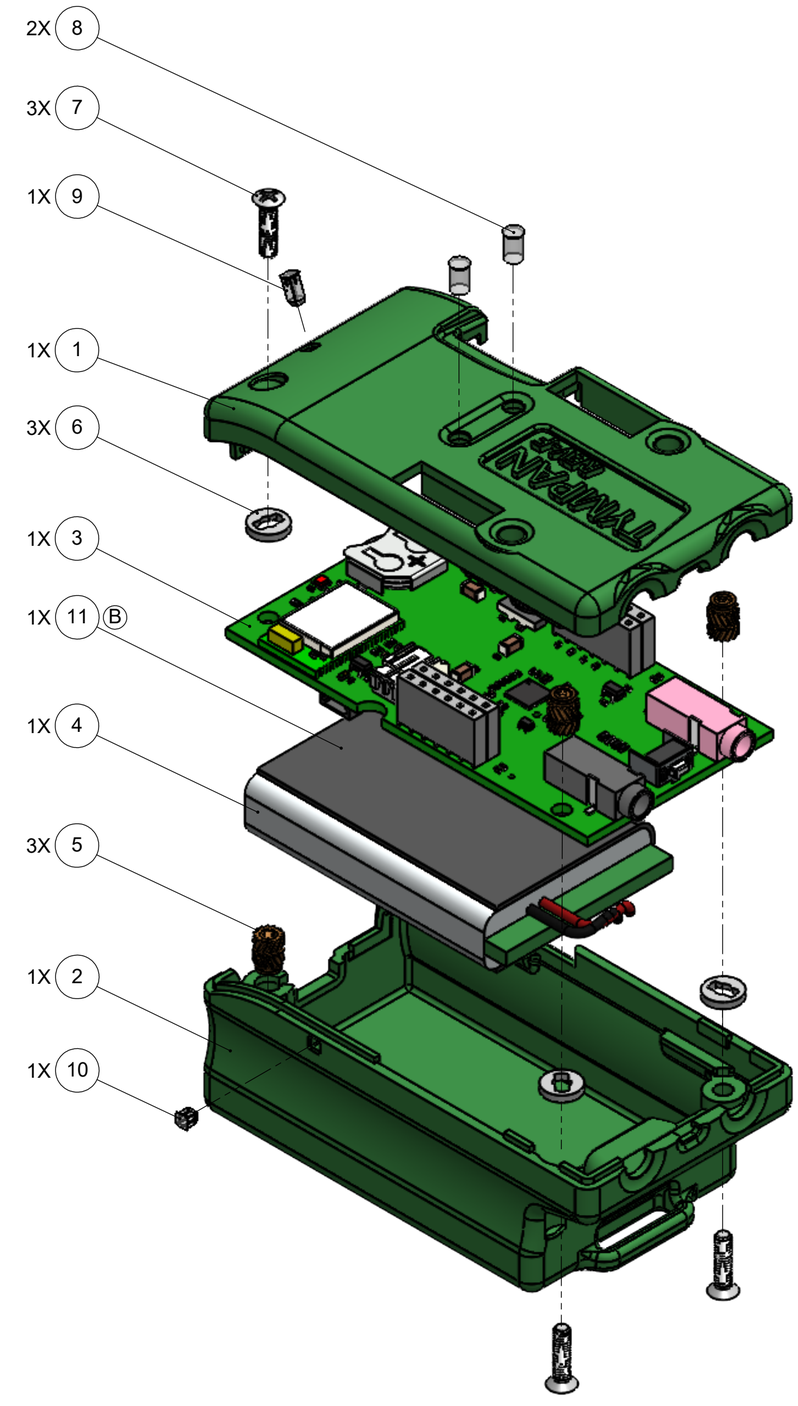

PART DASH No.	NEXT	FINAL	NEXT ASSY	USED ON
	QTY PER ASSY		APPLICATION	

PROPRIETARY AND CONFIDENTIAL

THE INFORMATION CONTAINED IN THIS DRAWING IS THE SOLE PROPERTY OF CREARE LLC. ANY REPRODUCTION IN PART OR AS A WHOLE WITHOUT THE WRITTEN PERMISSION OF CREARE LLC IS PROHIBITED.

MATERIAL

WEIGHT (gr)
54.83grams

UNLESS OTHERWISE SPECIFIED DIMENSIONS ARE INCHES. TOLERANCES ARE:

DECIMAL	FINISH	ANGLE
.X ± .040	63	X ± 10°
.XX ± .012		X.X ± 3°
.XXX ± .004		X.XX ± 1°
.XXXX ± .0008		

APPROVALS	NAME	DATE
DRAWN	EYuan	06/22/2021
DESIGN	EYuan	09/16/2024
ENG APPR.		
MFG APPR.		
Q.A.		

PROJECT NUMBER / NAME
7146 Cool Aid

Creare
HANOVER
NEW HAMPSHIRE
03755

THIRD ANGLE PROJECTION

TITLE:
7146_Tympan_Rev-F_ASSY

SIZE	CAGE CODE	DRAWING No	REV
C		0013525	C

SCALE 2:1 | DO NOT SCALE DRAWING | SHEET 1 OF 1