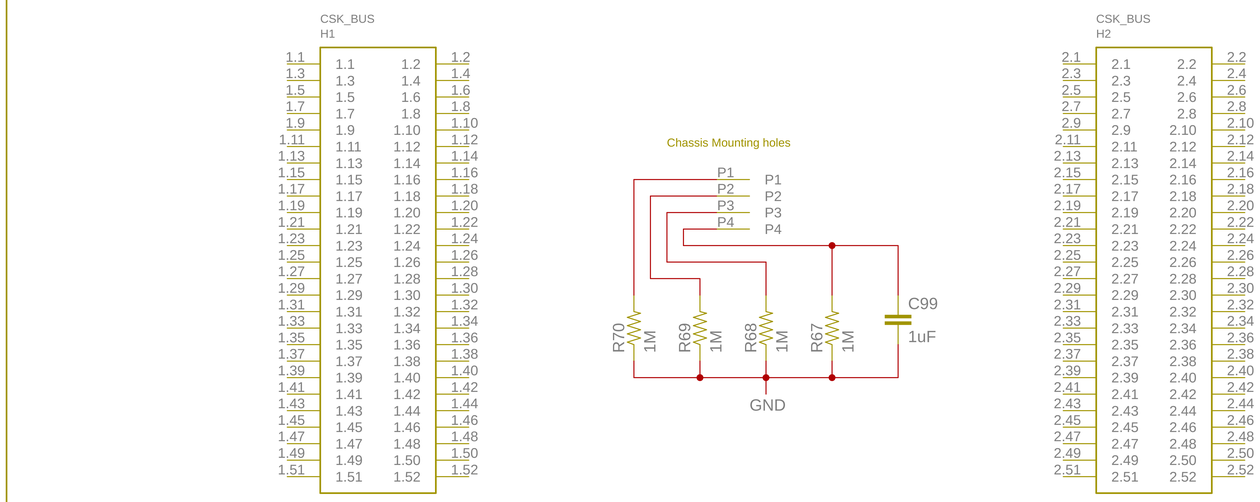

PC104

eps

10/13/21 4:08 PM

Sheet: 1/14

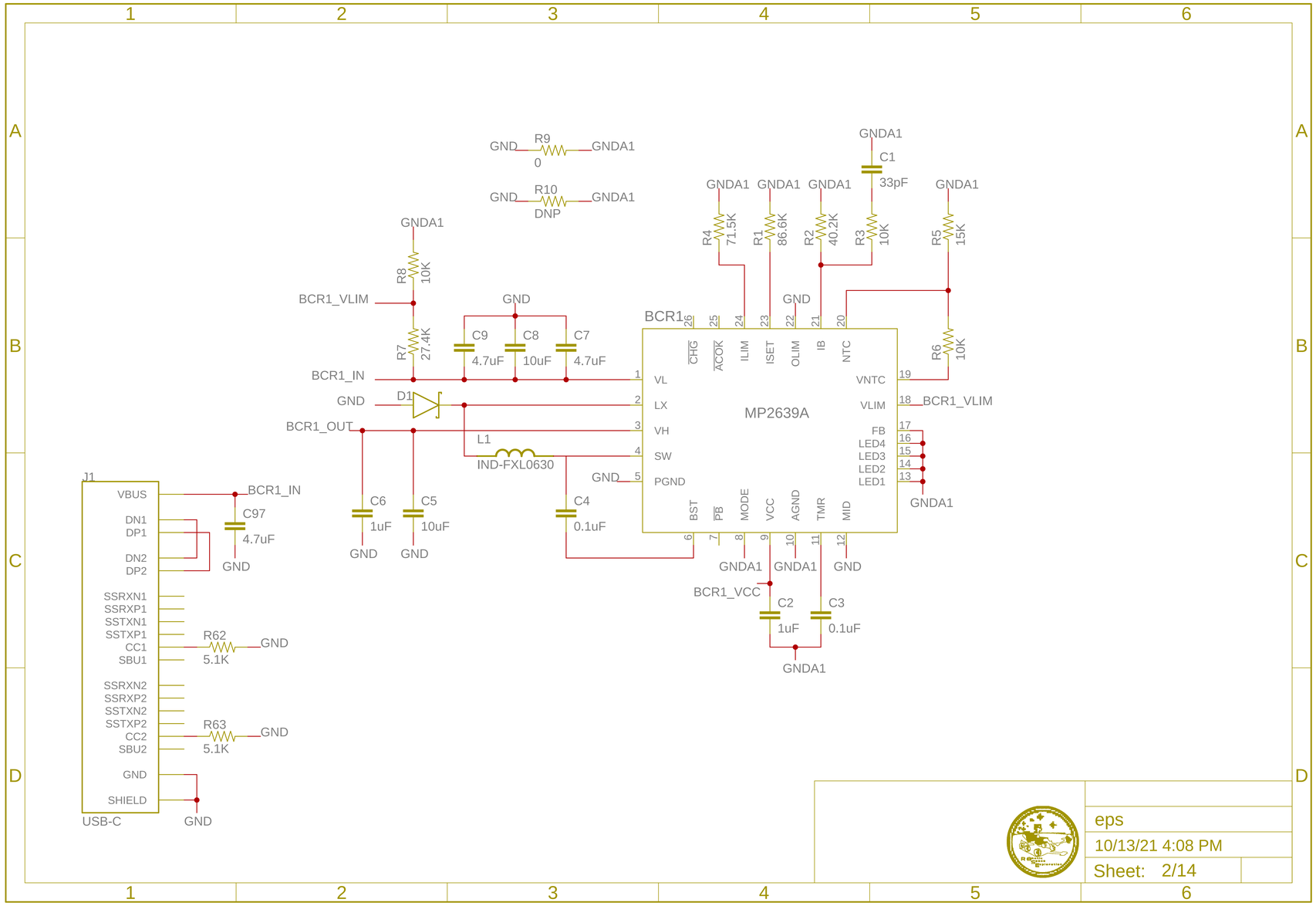

eps

10/13/21 4:08 PM

Sheet: 2/14

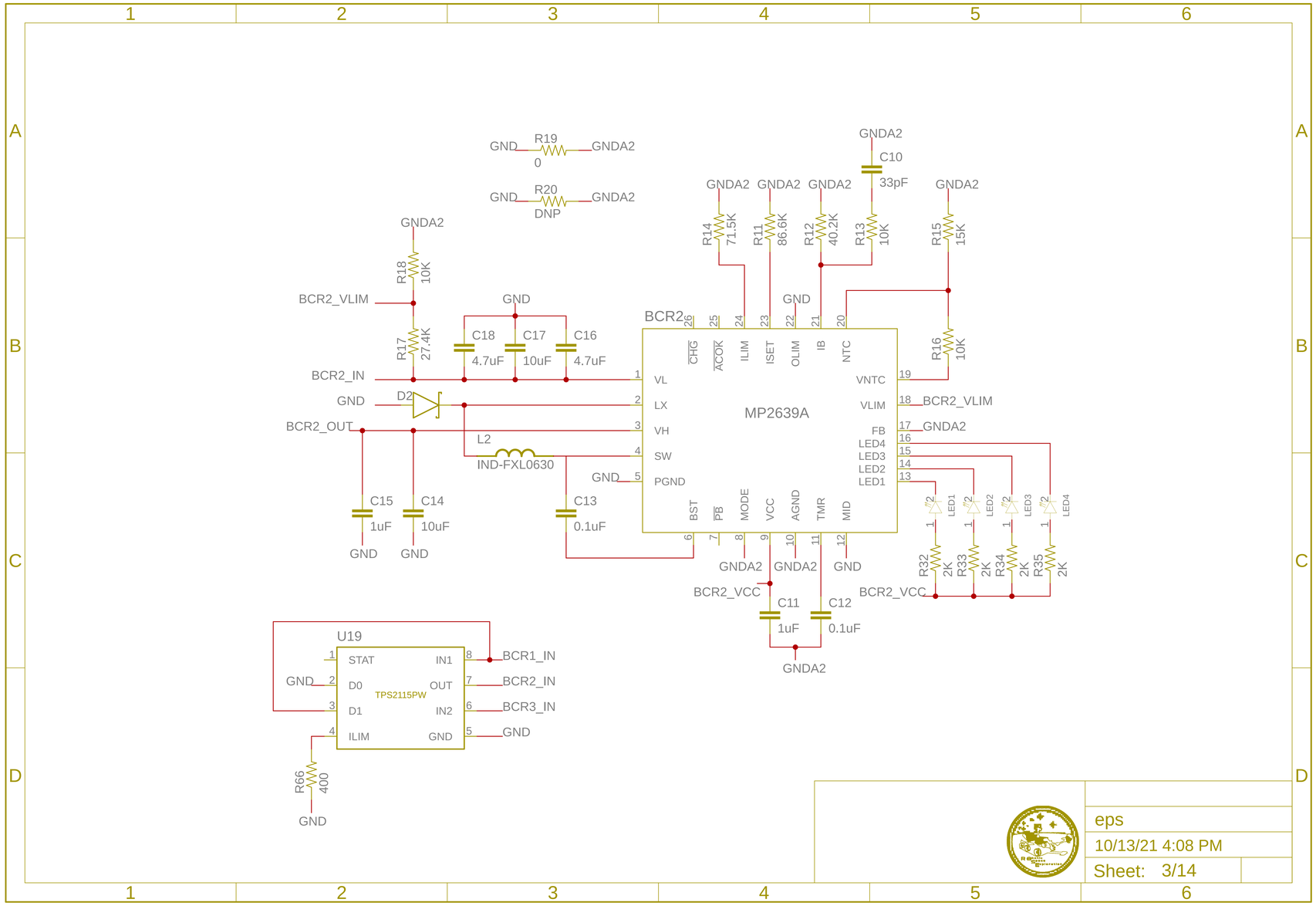

eps

10/13/21 4:08 PM

Sheet: 3/14

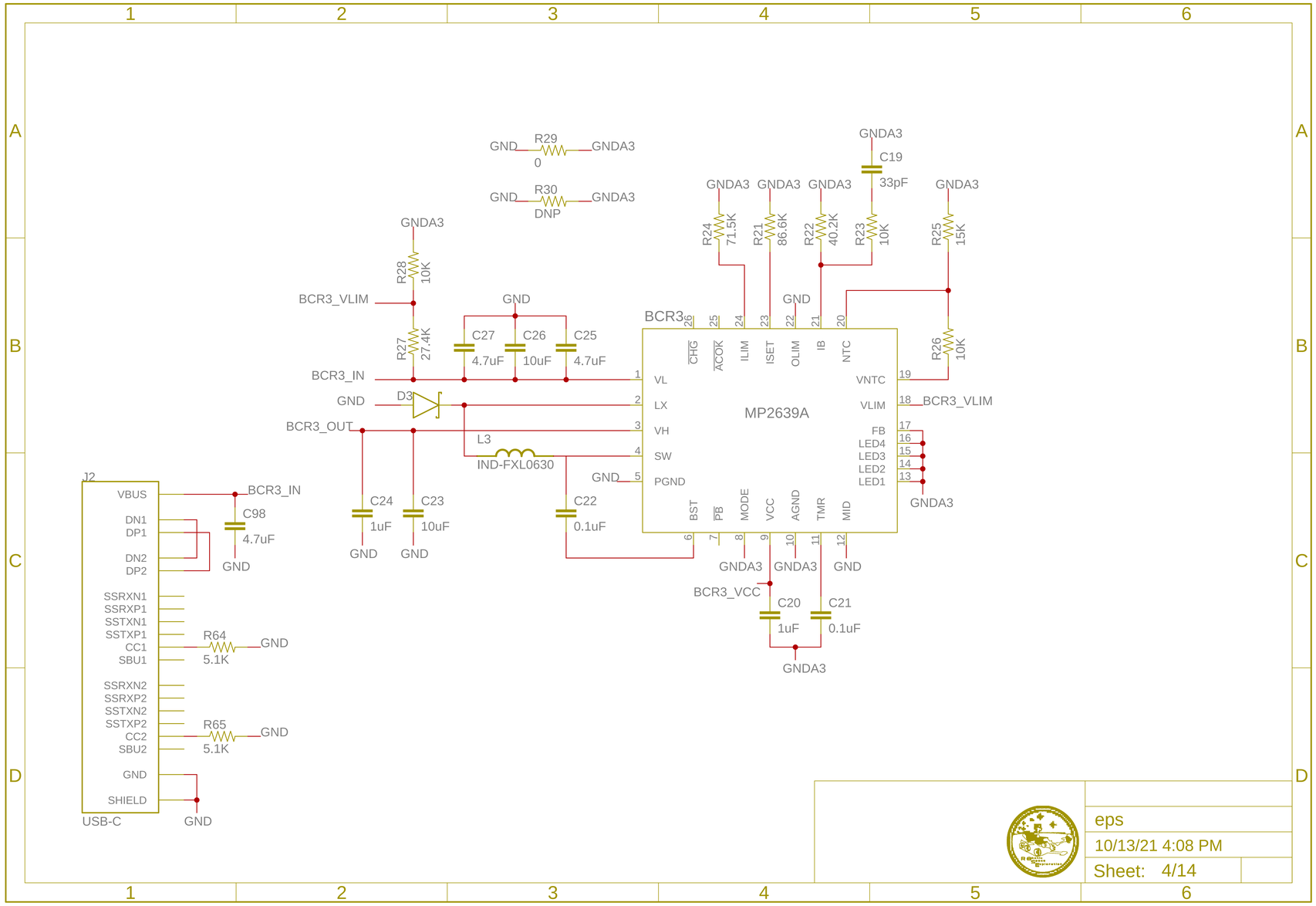

eps

10/13/21 4:08 PM

Sheet: 4/14

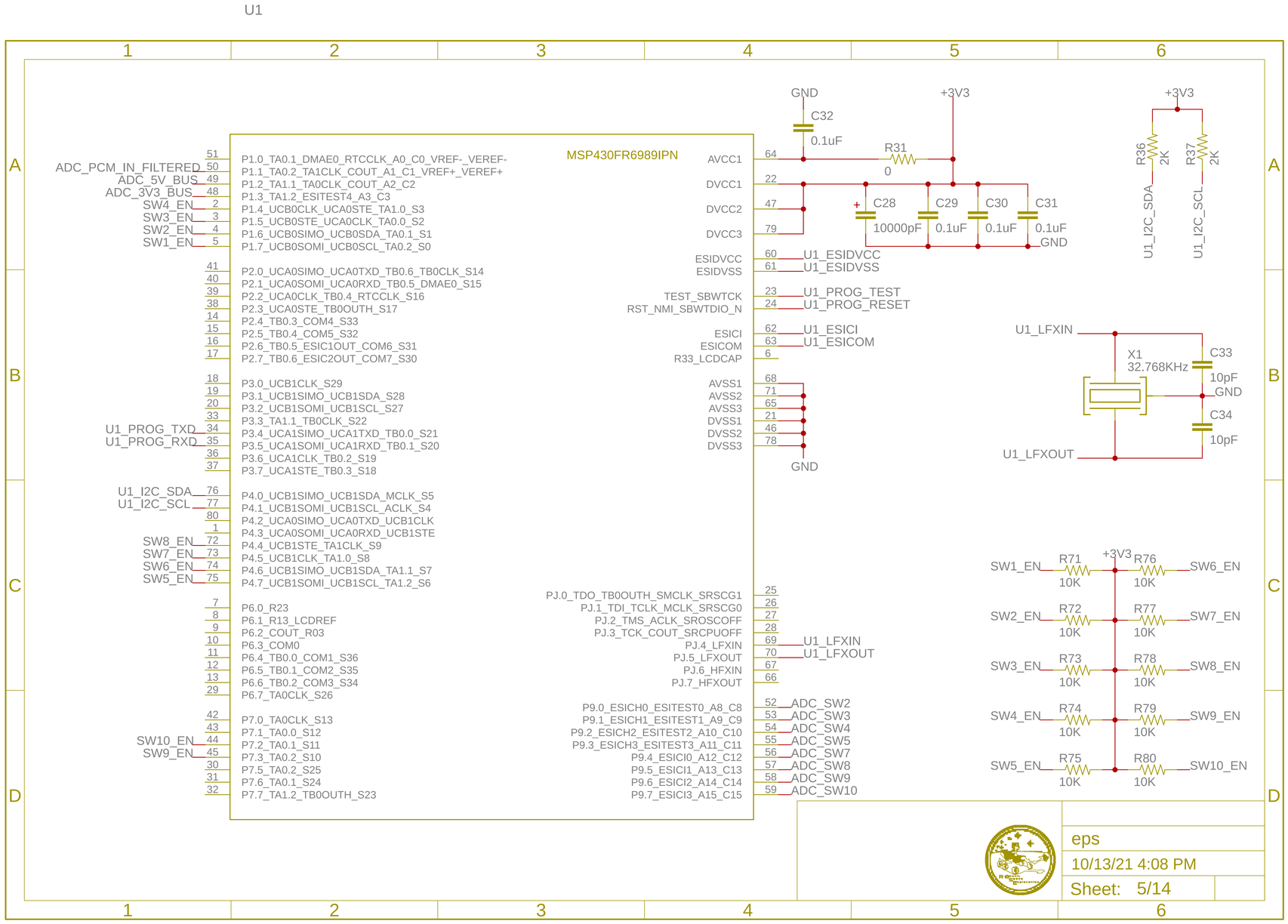
U1
MSP430FR6989IPN
51 P1.0_TA0.1_DMAE0_RTCCLK_A0_C0_VREF-_VEREF-
50 ADC_PCM_IN_FILTERED P1.1_TA0.2_TA1CLK_COUT_A1_C1_VREF+_VEREF+
49 ADC_5V_BUS P1.2_TA1.1_TA0CLK_COUT_A2_C2
48 ADC_3V3_BUS P1.3_TA1.2_ESITEST4_A3_C3
2 SW4_EN P1.4_UCB0CLK_UCA0STE_TA1.0_S3
3 SW3_EN P1.5_UCB0STE_UCA0CLK_TA0.0_S2
4 SW2_EN P1.6_UCB0SIMO_UCB0SDA_TA0.1_S1
5 SW1_EN P1.7_UCB0SOMI_UCB0SCL_TA0.2_S0
41 P2.0_UCA0SIMO_UCA0TXD_TB0.6_TB0CLK_S14
40 P2.1_UCA0SOMI_UCA0RXD_TB0.5_DMAE0_S15
39 P2.2_UCA0CLK_TB0.4_RTCCLK_S16
38 P2.3_UCA0STE_TB0OUTH_S17
14 P2.4_TB0.3_COM4_S33
15 P2.5_TB0.4_COM5_S32
16 P2.6_TB0.5_ESIC1OUT_COM6_S31
17 P2.7_TB0.6_ESIC2OUT_COM7_S30
18 P3.0_UCB1CLK_S29
19 P3.1_UCB1SIMO_UCB1SDA_S28
20 P3.2_UCB1SOMI_UCB1SCL_S27
33 P3.3_TA1.1_TB0CLK_S22
34 U1_PROG_TXD P3.4_UCA1SIMO_UCA1TXD_TB0.0_S21
35 U1_PROG_RXD P3.5_UCA1SOMI_UCA1RXD_TB0.1_S20
36 P3.6_UCA1CLK_TB0.2_S19
37 P3.7_UCA1STE_TB0.3_S18
76 U1_I2C_SDA P4.0_UCB1SIMO_UCB1SDA_MCLK_S5
77 U1_I2C_SCL P4.1_UCB1SOMI_UCB1SCL_ACLK_S4
80 P4.2_UCA0SIMO_UCA0TXD_UCB1CLK
1 P4.3_UCA0SOMI_UCA0RXD_UCB1STE
72 SW8_EN P4.4_UCB1STE_TA1CLK_S9
73 SW7_EN P4.5_UCB1CLK_TA1.0_S8
74 SW6_EN P4.6_UCB1SIMO_UCB1SDA_TA1.1_S7
75 SW5_EN P4.7_UCB1SOMI_UCB1SCL_TA1.2_S6
7 P6.0_R23
8 P6.1_R13_LCDREF
9 P6.2_COUT_R03
10 P6.3_COM0
11 P6.4_TB0.0_COM1_S36
12 P6.5_TB0.1_COM2_S35
13 P6.6_TB0.2_COM3_S34
29 P6.7_TA0CLK_S26
42 P7.0_TA0CLK_S13
43 P7.1_TA0.0_S12
44 SW10_EN P7.2_TA0.1_S11
45 SW9_EN P7.3_TA0.2_S10
30 P7.5_TA0.2_S25
31 P7.6_TA0.1_S24
32 P7.7_TA1.2_TB0OUTH_S23
AVCC1 64
DVCC1 22
DVCC2 47
DVCC3 79
ESIDVCC 60 U1_ESIDVCC
ESIDVSS 61 U1_ESIDVSS
TEST_SBWTCK 23 U1_PROG_TEST
RST_NMI_SBWTDIO_N 24 U1_PROG_RESET
ESICI 62 U1_ESICI
ESICOM 63 U1_ESICOM
R33_LCDCAP 6
AVSS1 68
AVSS2 71
AVSS3 65
DVSS1 21
DVSS2 46
DVSS3 78
GND
PJ.0_TDO_TB0OUTH_SMCLK_SRSCG1 25
PJ.1_TDI_TCLK_MCLK_SRSCG0 26
PJ.2_TMS_ACLK_SROSCOFF 27
PJ.3_TCK_COUT_SRCPUOFF 28
PJ.4_LFXIN 69 U1_LFXIN
PJ.5_LFXOUT 70 U1_LFXOUT
PJ.6_HFXIN 67
PJ.7_HFXOUT 66
P9.0_ESICH0_ESITEST0_A8_C8 52 ADC_SW2
P9.1_ESICH1_ESITEST1_A9_C9 53 ADC_SW3
P9.2_ESICH2_ESITEST2_A10_C10 54 ADC_SW4
P9.3_ESICH3_ESITEST3_A11_C11 55 ADC_SW5
P9.4_ESICI0_A12_C12 56 ADC_SW7
P9.5_ESICI1_A13_C13 57 ADC_SW8
P9.6_ESICI2_A14_C14 58 ADC_SW9
P9.7_ESICI3_A15_C15 59 ADC_SW10
GND
C32
0.1uF
+3V3
R31
0
C28
10000pF
C29
0.1uF
C30
0.1uF
C31
0.1uF
GND
+3V3
R36
2K
R37
2K
U1_I2C_SDA
U1_I2C_SCL
U1_LFXIN
X1
32.768KHz
C33
10pF
GND
C34
10pF
U1_LFXOUT
+3V3
SW1_EN R71 10K R76 10K SW6_EN
SW2_EN R72 10K R77 10K SW7_EN
SW3_EN R73 10K R78 10K SW8_EN
SW4_EN R74 10K R79 10K SW9_EN
SW5_EN R75 10K R80 10K SW10_EN
eps
10/13/21 4:08 PM
Sheet: 5/14

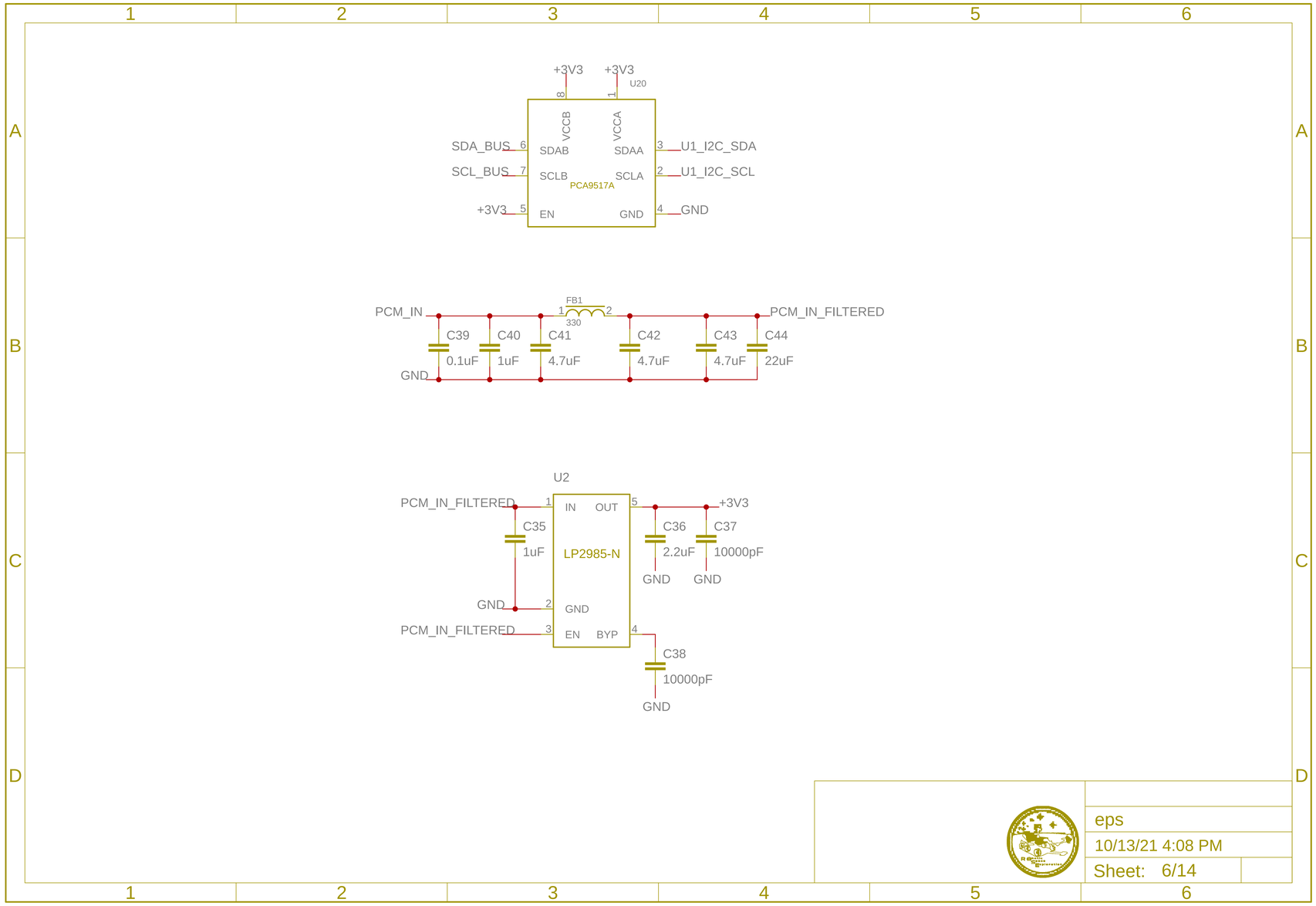

eps

10/13/21 4:08 PM

Sheet: 6/14

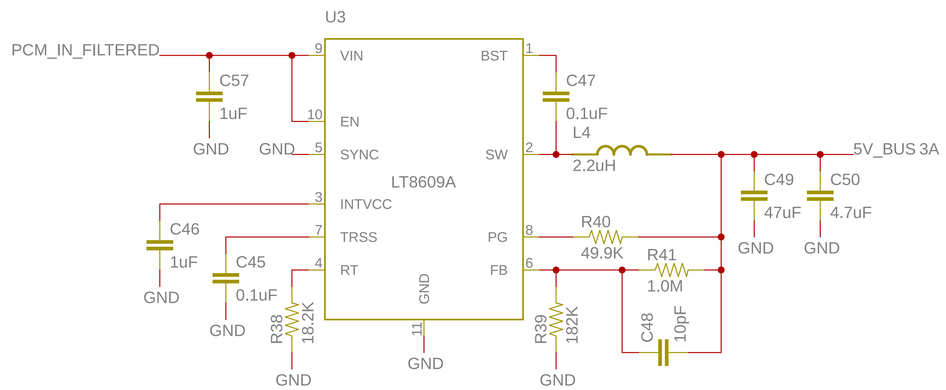

eps

10/13/21 4:08 PM

Sheet: 7/14

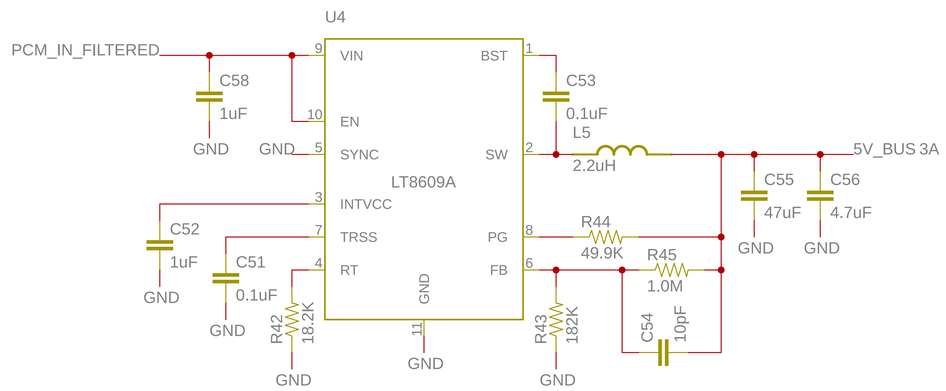

eps

10/13/21 4:08 PM

Sheet: 8/14

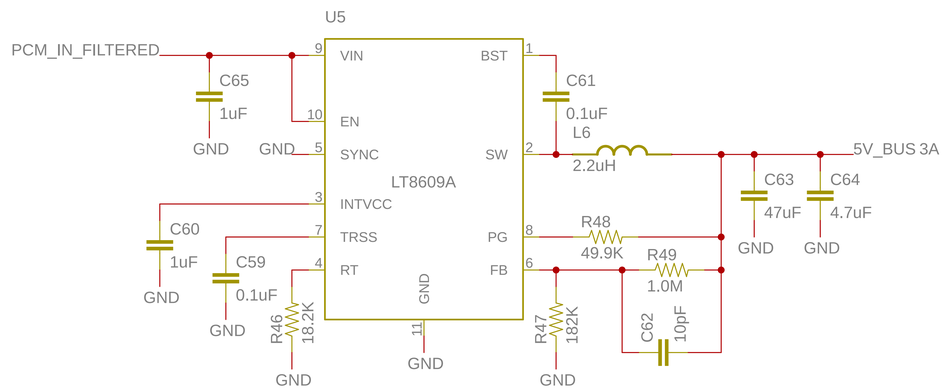

eps

10/13/21 4:08 PM

Sheet: 9/14

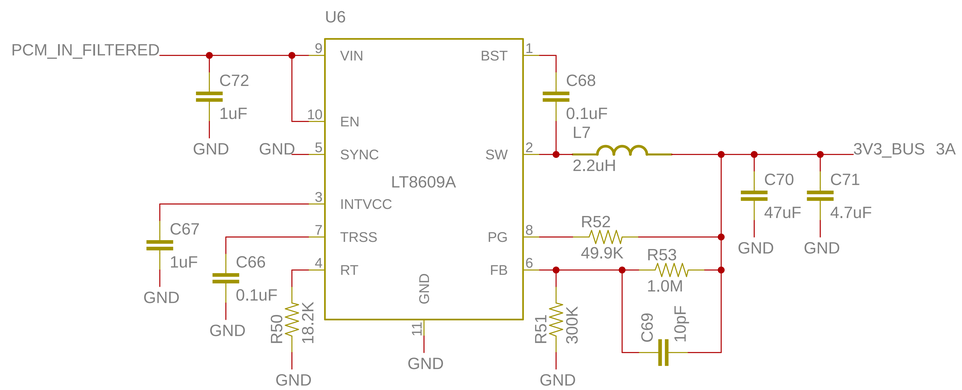

eps

10/13/21 4:08 PM

Sheet: 10/14

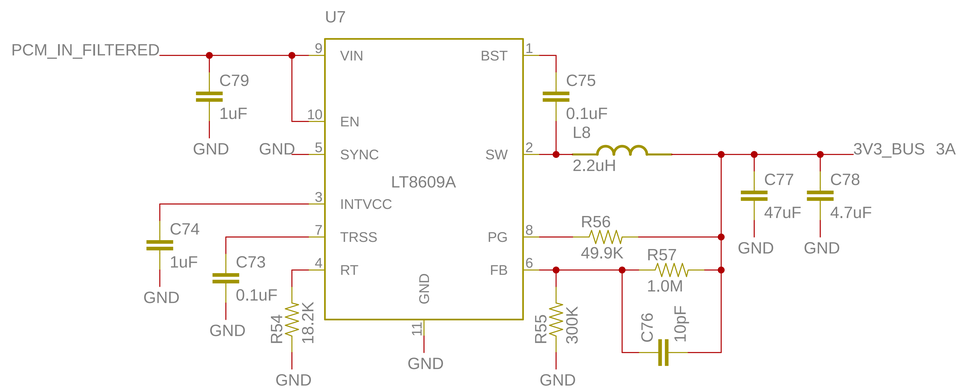

eps

10/13/21 4:08 PM

Sheet: 11/14

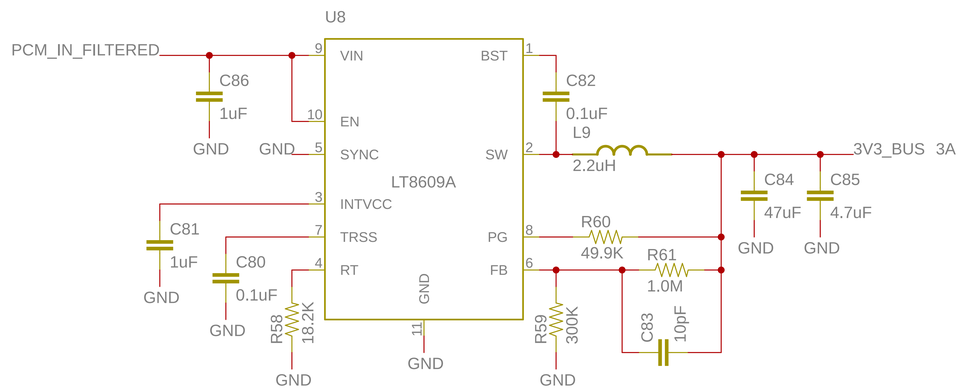

eps

10/13/21 4:08 PM

Sheet: 12/14

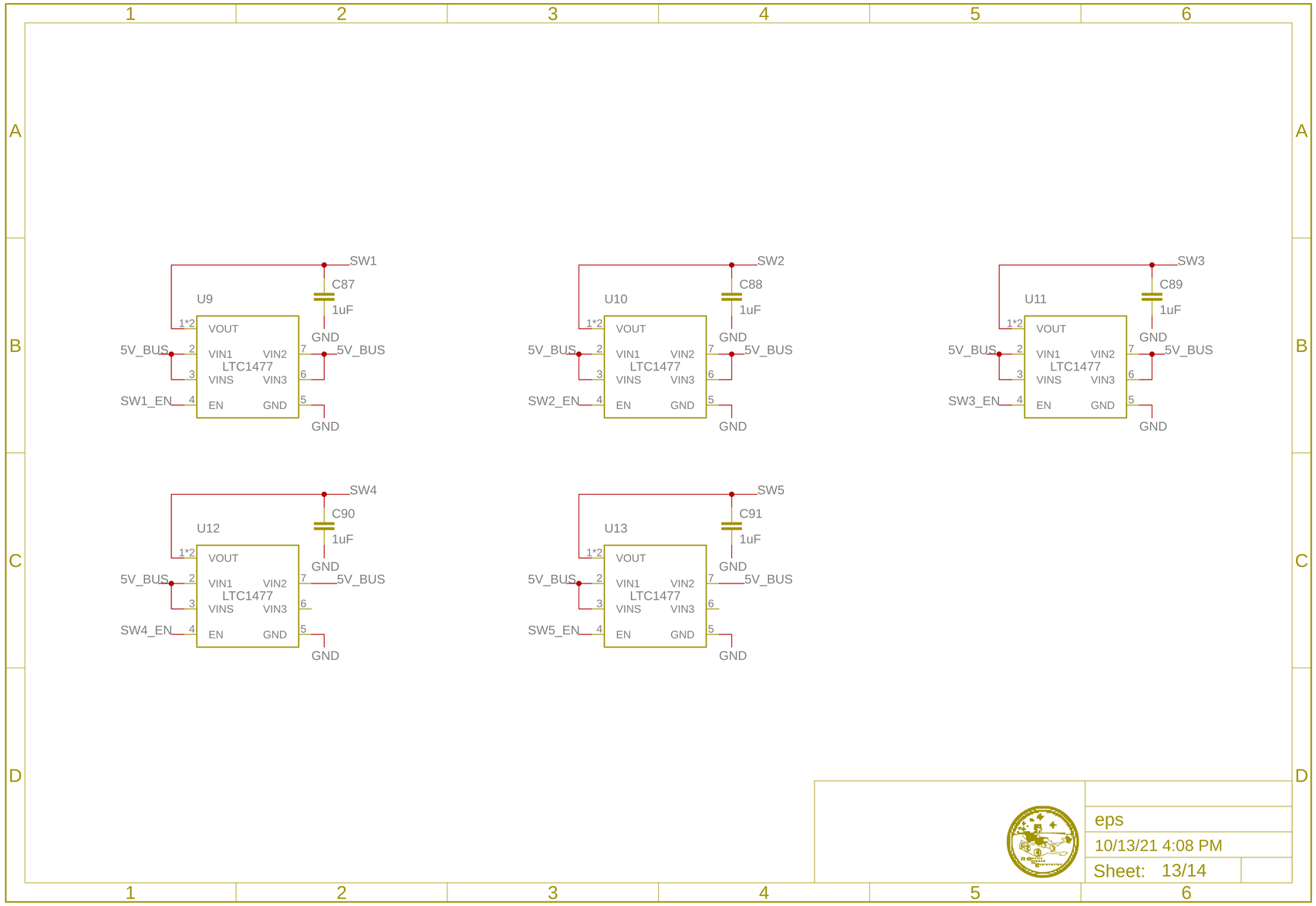

eps

10/13/21 4:08 PM

Sheet: 13/14

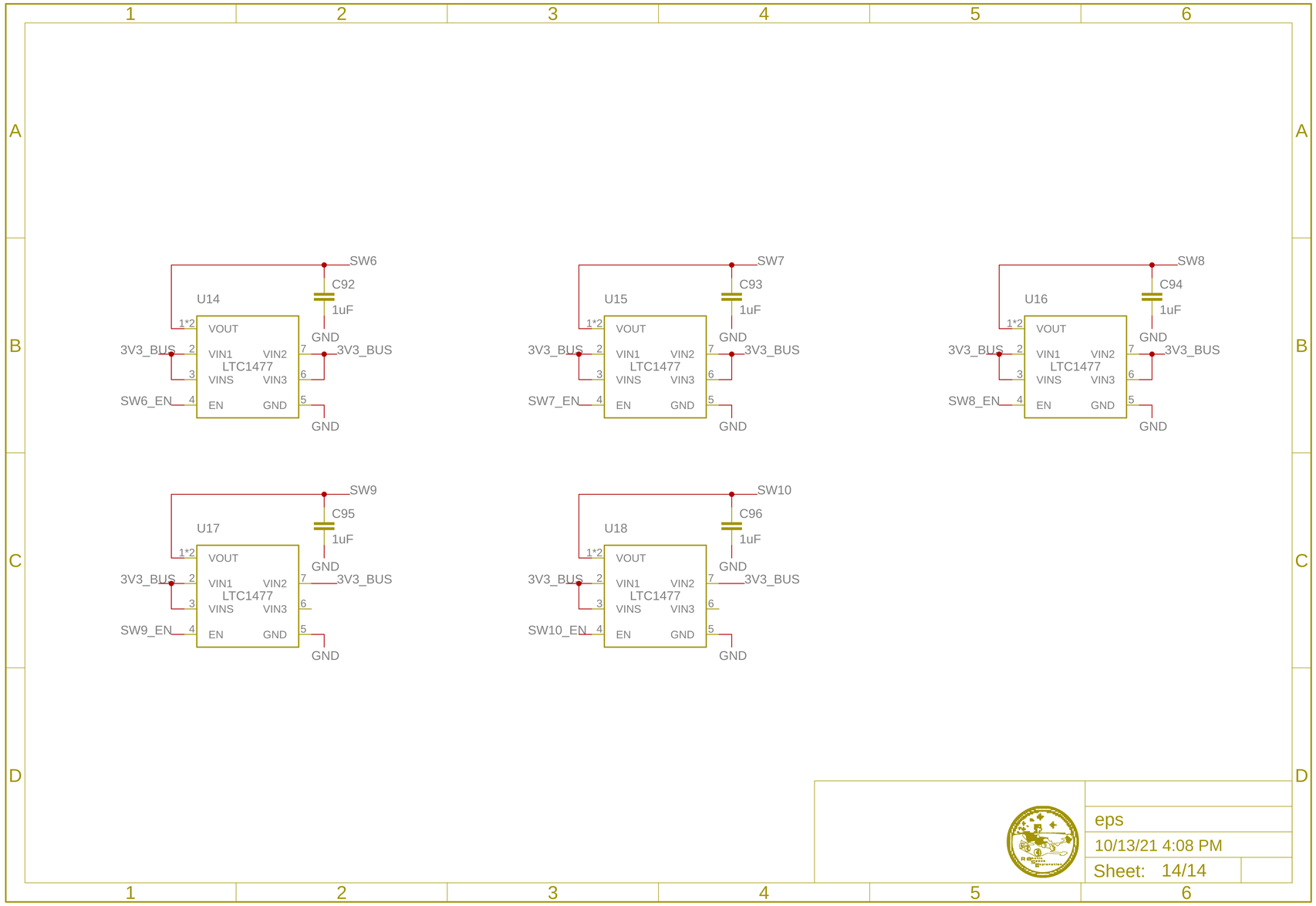
U14
SW6
C92
1uF
GND
1*2
VOUT
3V3_BUS
2
VIN1
VIN2
7
3V3_BUS
LTC1477
3
VINS
VIN3
6
SW6_EN
4
EN
GND
5
GND
U15
SW7
C93
1uF
GND
1*2
VOUT
3V3_BUS
2
VIN1
VIN2
7
3V3_BUS
LTC1477
3
VINS
VIN3
6
SW7_EN
4
EN
GND
5
GND
U16
SW8
C94
1uF
GND
1*2
VOUT
3V3_BUS
2
VIN1
VIN2
7
3V3_BUS
LTC1477
3
VINS
VIN3
6
SW8_EN
4
EN
GND
5
GND
U17
SW9
C95
1uF
GND
1*2
VOUT
3V3_BUS
2
VIN1
VIN2
7
3V3_BUS
LTC1477
3
VINS
VIN3
6
SW9_EN
4
EN
GND
5
GND
U18
SW10
C96
1uF
GND
1*2
VOUT
3V3_BUS
2
VIN1
VIN2
7
3V3_BUS
LTC1477
3
VINS
VIN3
6
SW10_EN
4
EN
GND
5
GND
eps
10/13/21 4:08 PM
Sheet: 14/14