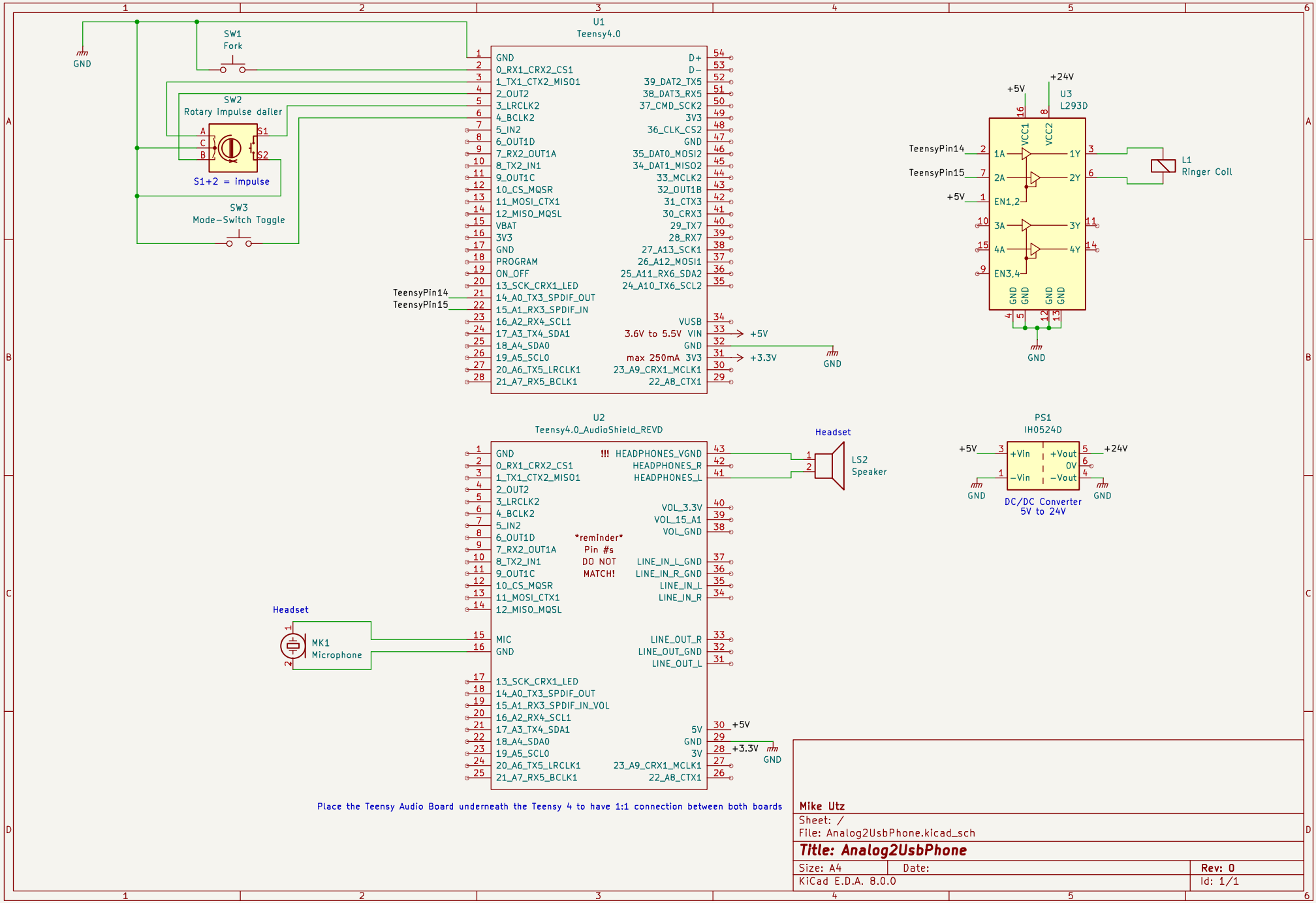
U1
Teensy4.0
GND
0_RX1_CRX2_CS1
1_TX1_CTX2_MISO1
2_OUT2
3_LRCLK2
4_BCLK2
5_IN2
6_OUT1D
7_RX2_OUT1A
8_TX2_IN1
9_OUT1C
10_CS_MQSR
11_MOSI_CTX1
12_MISO_MQSL
VBAT
3V3
GND
PROGRAM
ON_OFF
13_SCK_CRX1_LED
14_A0_TX3_SPDIF_OUT
15_A1_RX3_SPDIF_IN
16_A2_RX4_SCL1
17_A3_TX4_SDA1
18_A4_SDA0
19_A5_SCL0
20_A6_TX5_LRCLK1
21_A7_RX5_BCLK1
D+
D−
39_DAT2_TX5
38_DAT3_RX5
37_CMD_SCK2
3V3
36_CLK_CS2
GND
35_DAT0_MOSI2
34_DAT1_MISO2
33_MCLK2
32_OUT1B
31_CTX3
30_CRX3
29_TX7
28_RX7
27_A13_SCK1
26_A12_MOSI1
25_A11_RX6_SDA2
24_A10_TX6_SCL2
VUSB
3.6V to 5.5V VIN
GND
max 250mA 3V3
23_A9_CRX1_MCLK1
22_A8_CTX1
TeensyPin14
TeensyPin15
+5V
+3.3V
GND
SW1
Fork
SW2
Rotary impulse dailer
A
C
B
S1
S2
S1+2 = impulse
SW3
Mode-Switch Toggle
U3
L293D
+24V
+5V
VCC1
VCC2
1A
2A
EN1,2
3A
4A
EN3,4
1Y
2Y
3Y
4Y
GND GND GND GND
L1
Ringer Coil
U2
Teensy4.0_AudioShield_REVD
!!! HEADPHONES_VGND
HEADPHONES_R
HEADPHONES_L
VOL_3.3V
VOL_15_A1
VOL_GND
reminder
Pin #s
DO NOT
MATCH!
LINE_IN_L_GND
LINE_IN_R_GND
LINE_IN_L
LINE_IN_R
MIC
GND
LINE_OUT_R
LINE_OUT_GND
LINE_OUT_L
5V
3V
Headset
LS2
Speaker
MK1
Microphone
PS1
IH0524D
+Vin
−Vin
+Vout
0V
−Vout
DC/DC Converter
5V to 24V
Place the Teensy Audio Board underneath the Teensy 4 to have 1:1 connection between both boards
Mike Utz
Sheet: /
File: Analog2UsbPhone.kicad_sch
Title: Analog2UsbPhone
Size: A4
Date:
Rev: 0
KiCad E.D.A. 8.0.0
Id: 1/1