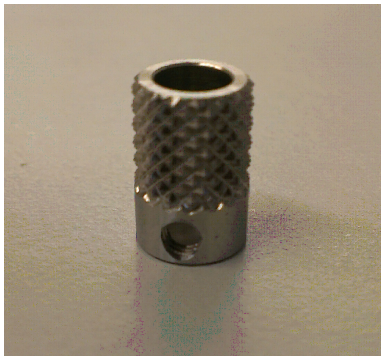

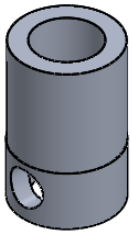

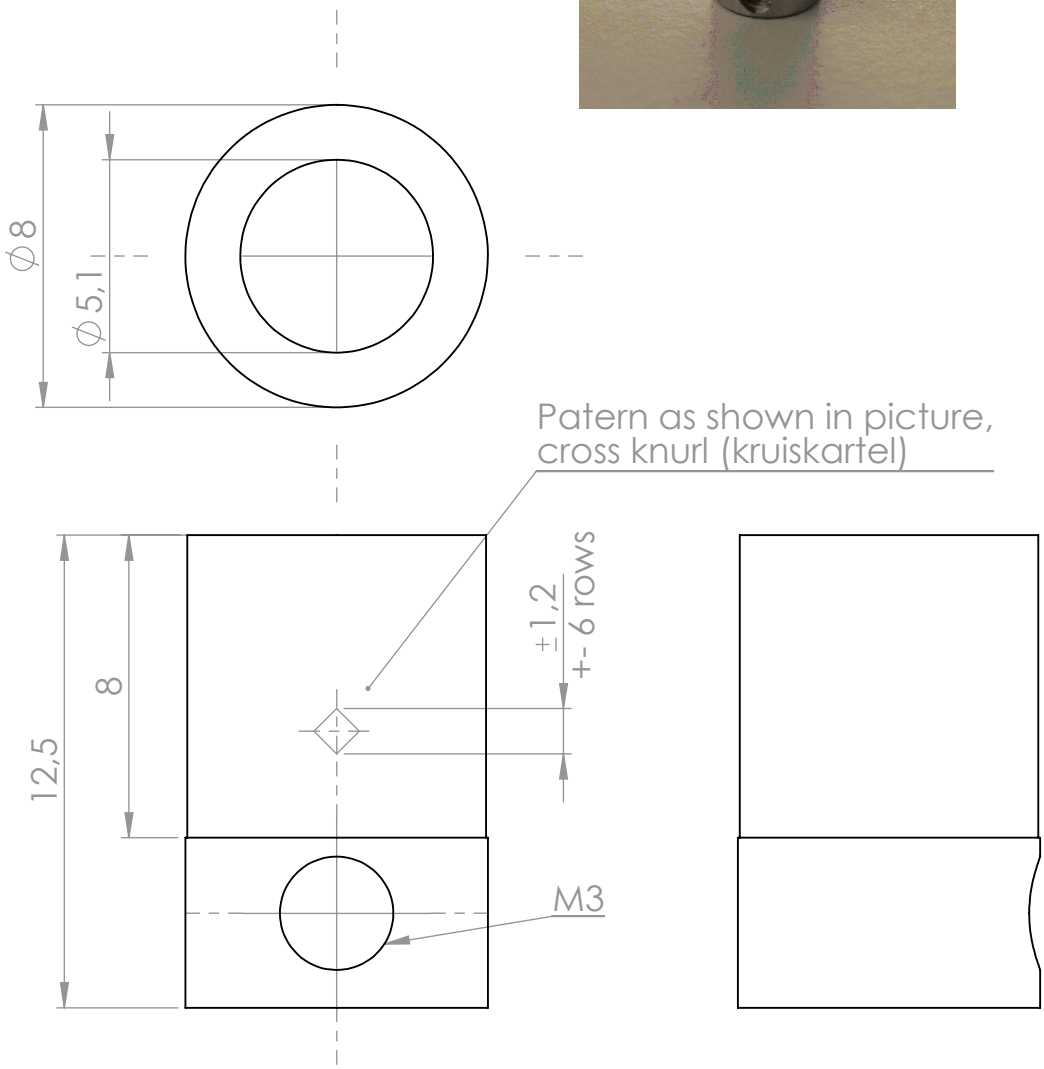

name: S 1263-B2P-A	part nr.: 1263-B2P-A	
material: Steel 1060	weight: 1.0 gram	
date: 1-10-2013	made by: M. Timmers	
	checked by:	
	approved by:	
part of assembly: ...	document number: B 1263-B2P-A	rev.nr.:

SolidWorks Student Edition.
For Academic Use Only.

All rights are reserved. Reproduction in whole or in part is prohibited without the written consent of the copyright owner.

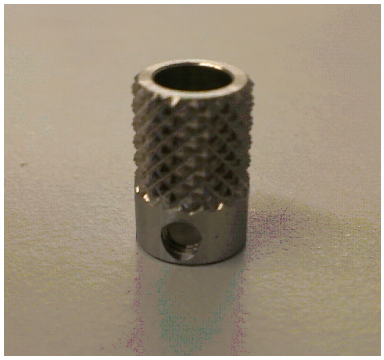

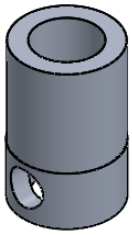

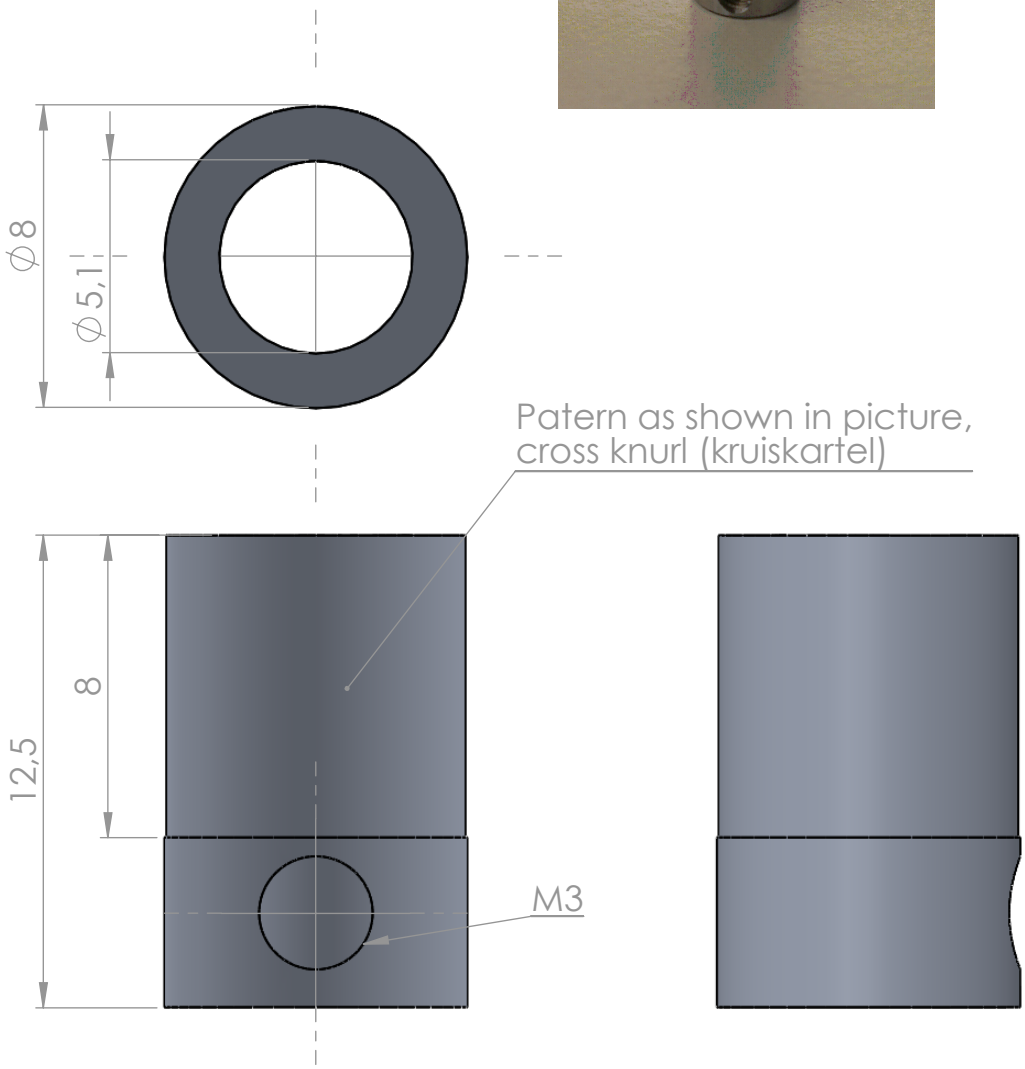

name: B 1263-B2P-A	part nr.: 1263-B2P-A	
material: Steel 1060	weight: 1.0 gram	
date: 1-10-2013	made by: M. Timmers	
	checked by:	
	approved by:	
part of assembly: ...	document number: B 1263-B2P-A	rev.nr.:

SolidWorks Student Edition.
For Academic Use Only.
All rights are reserved. Reproduction in whole or in part is prohibited without the written consent of the copyright owner.