Copper top 70u

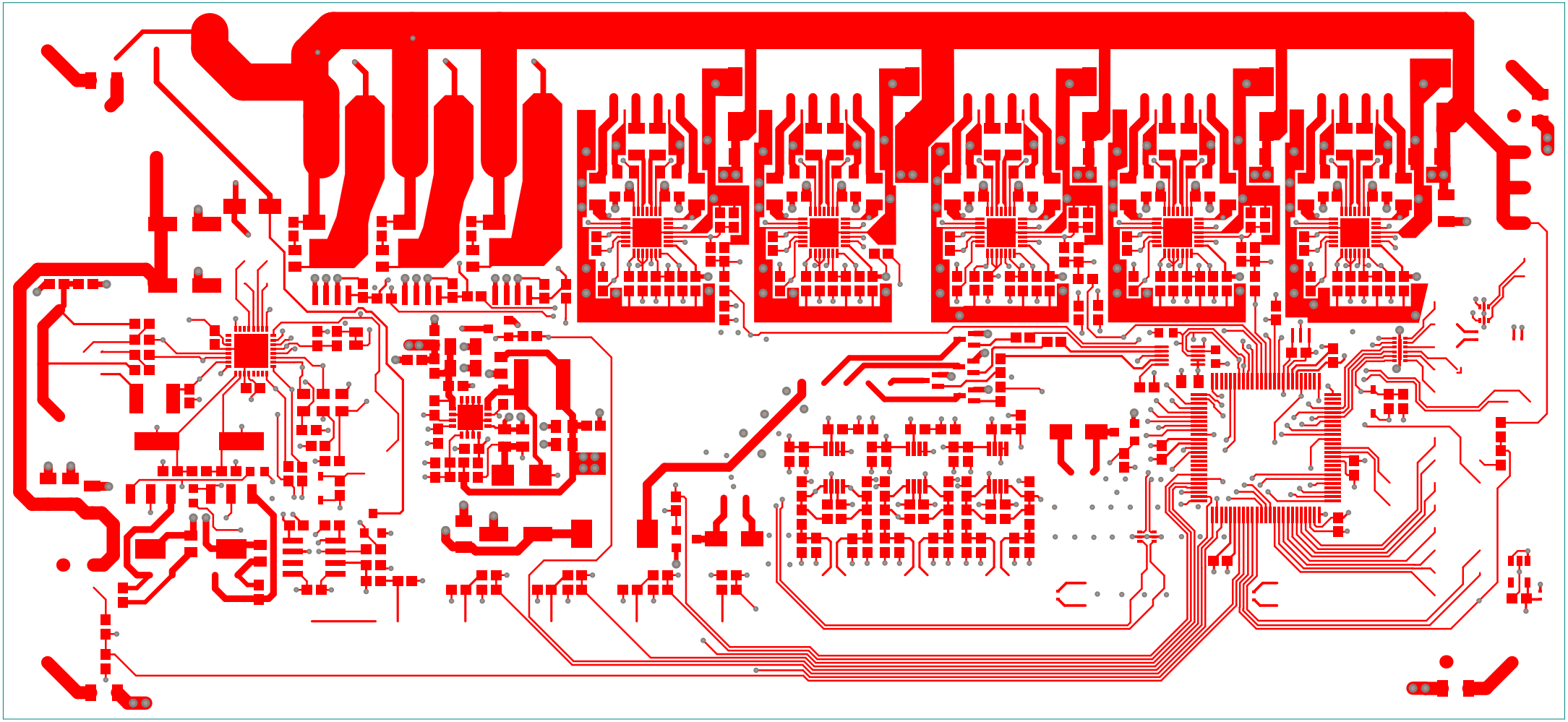

Copper inner1 35u

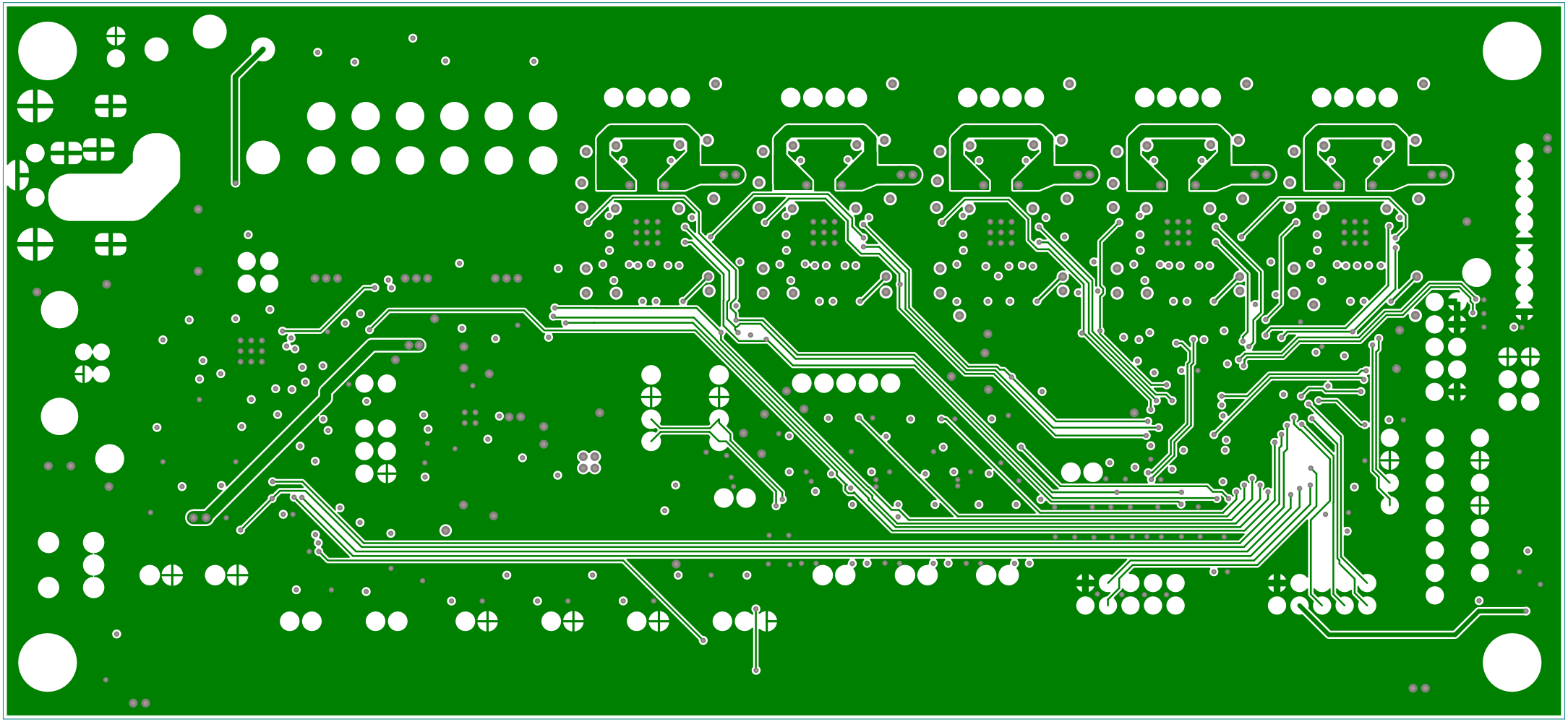

Copper inner2 35u

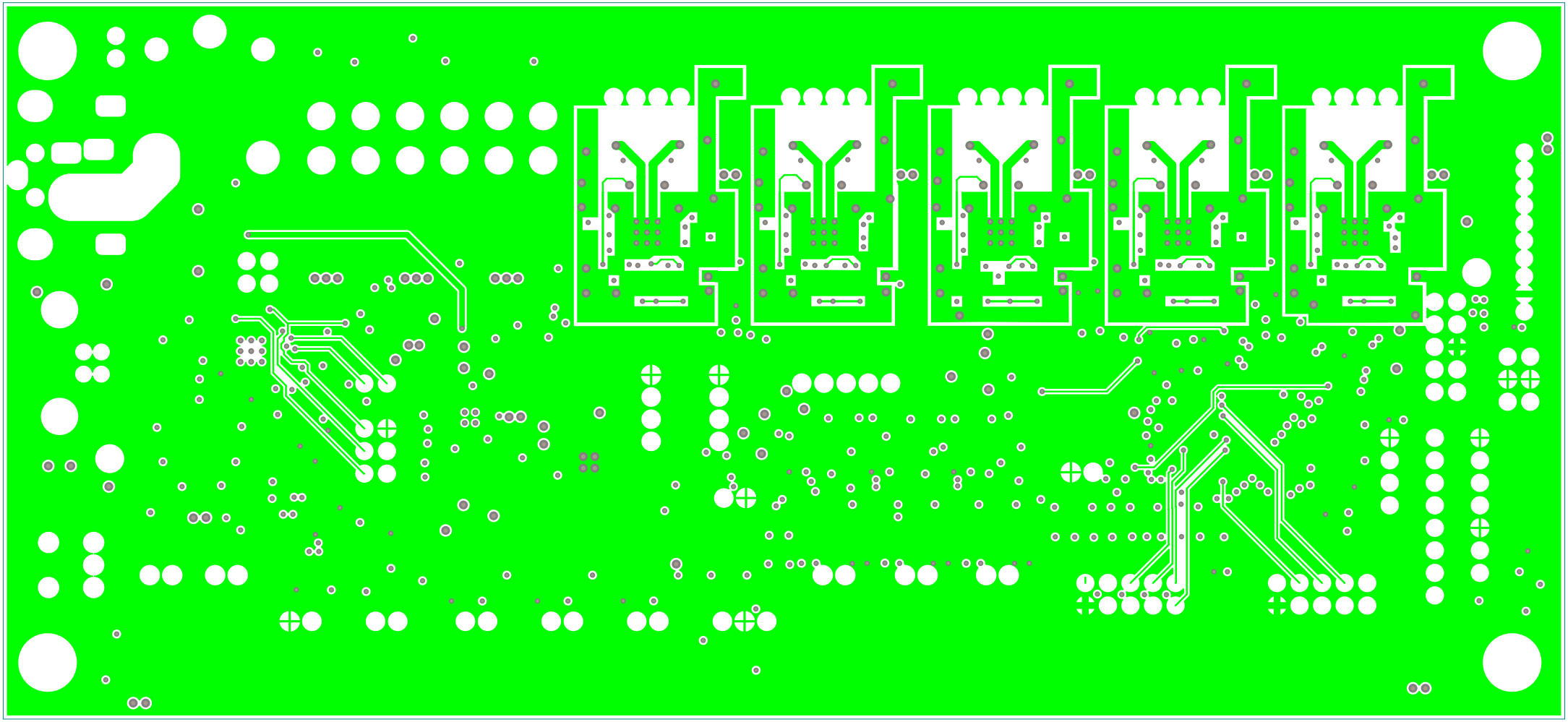

Copper bot 70u

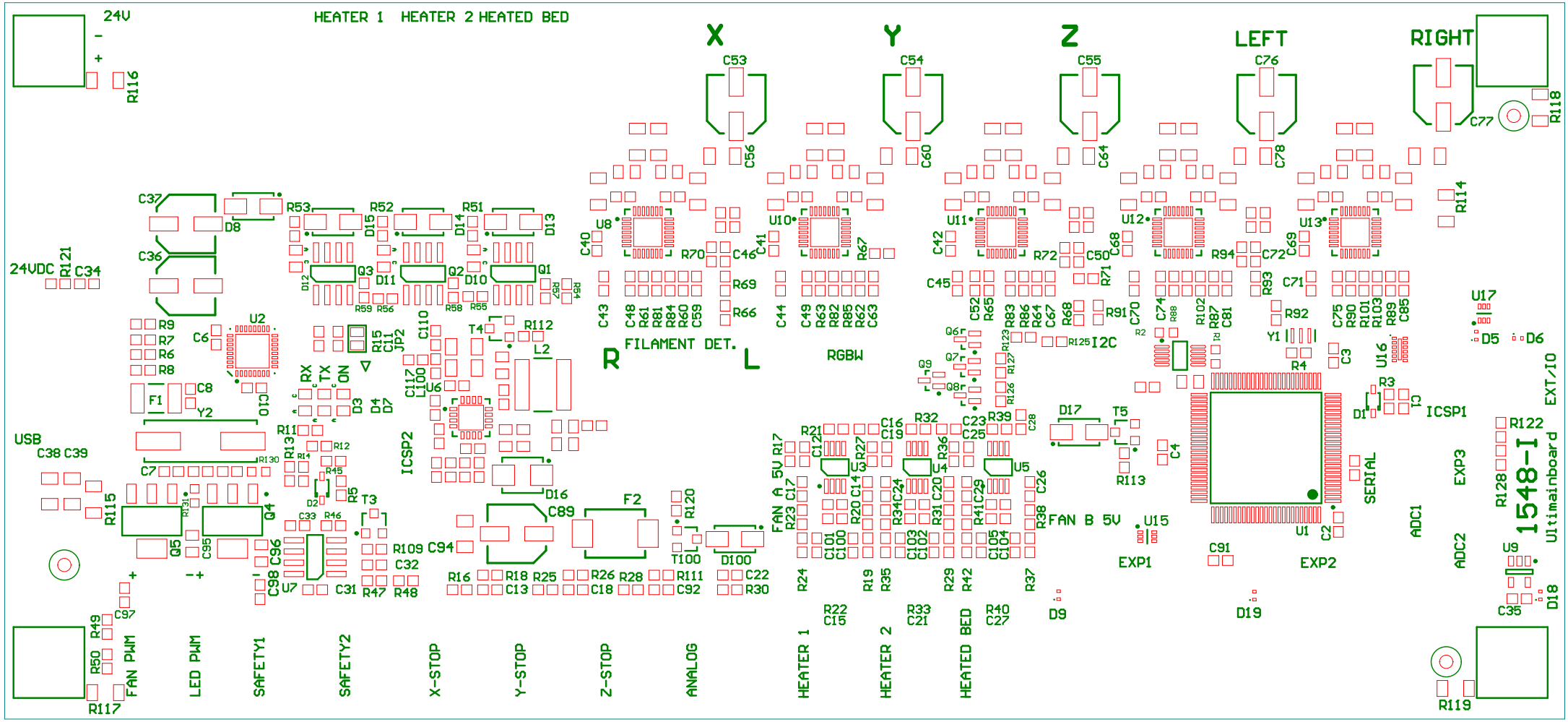
24V
HEATER 1
HEATER 2
HEATED BED
X
Y
Z
LEFT
RIGHT
FILAMENT DET.
R
L
RGBW
I2C
USB
24VDC
ICSP2
ICSP1
EXT/IO
SERIAL
EXP1
EXP2
EXP3
ADC1
ADC2
FAN A 5V
FAN B 5V
1548-I
Ultimainboard
FAN PWM
LED PWM
SAFETY1
SAFETY2
X-STOP
Y-STOP
Z-STOP
ANALOG
HEATER 1
HEATER 2
HEATED BED

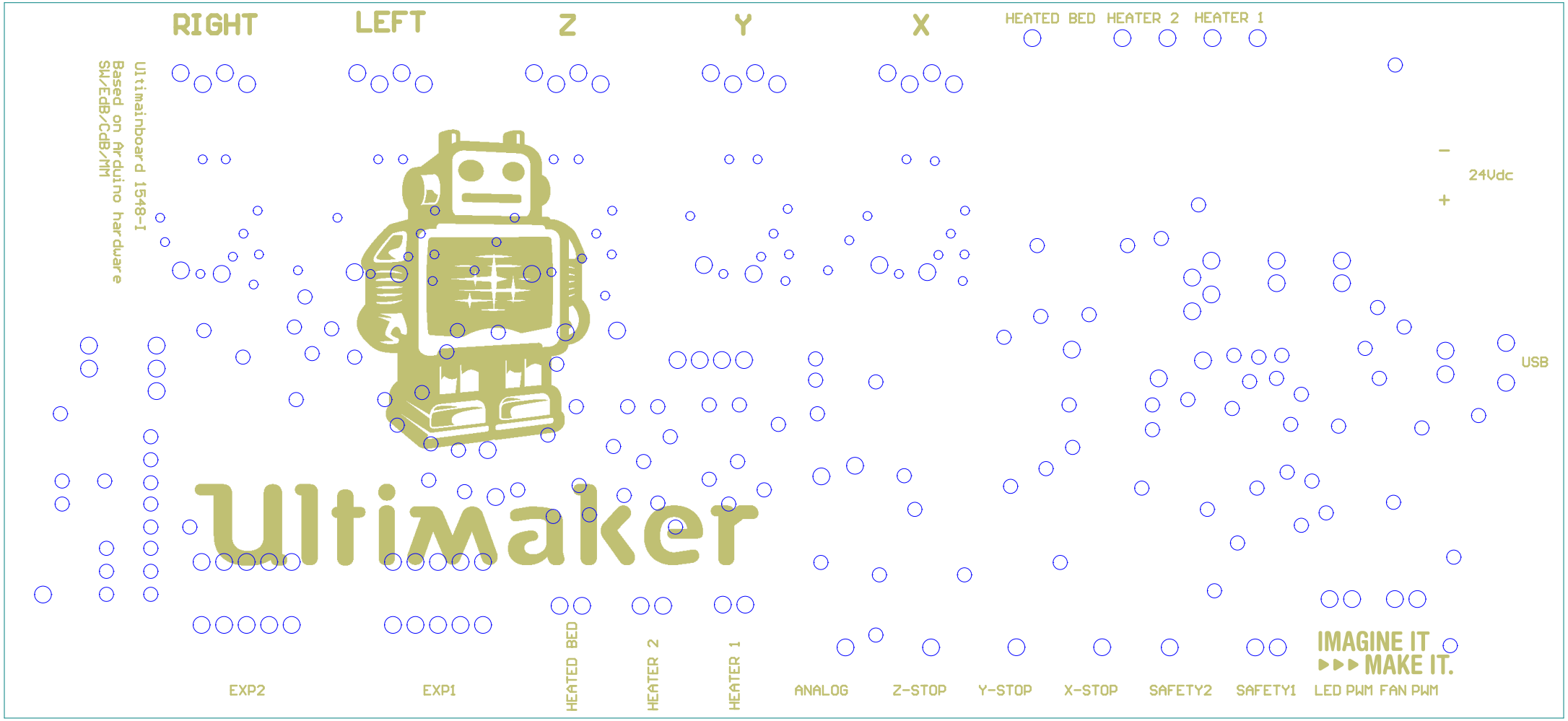
RIGHT
LEFT
Z
Y
X
HEATED BED
HEATER 2
HEATER 1
Ultimainboard 1548-I
Based on Arduino hardware
SW/EdB/CdB/MM
24Vdc
USB
Ultimaker
IMAGINE IT
MAKE IT.
EXP2
EXP1
HEATED BED
HEATER 2
HEATER 1
ANALOG
Z-STOP
Y-STOP
X-STOP
SAFETY2
SAFETY1
LED PWM
FAN PWM