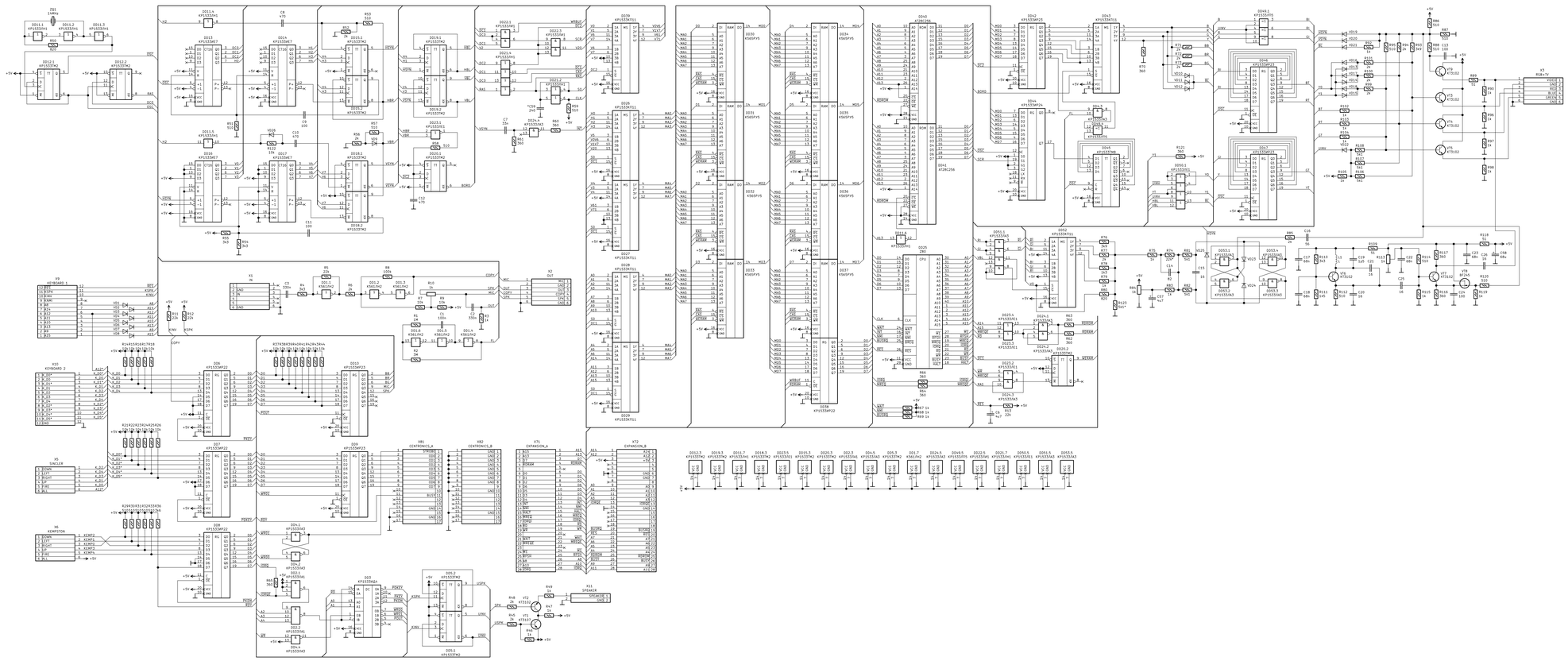

Sheet: /
File: Magic-05.sch

Title:		
Size: A0	Date:	Rev:
KiCad E.D.A. kicad 5.1.5+dfsg1-2		Id: 1/1