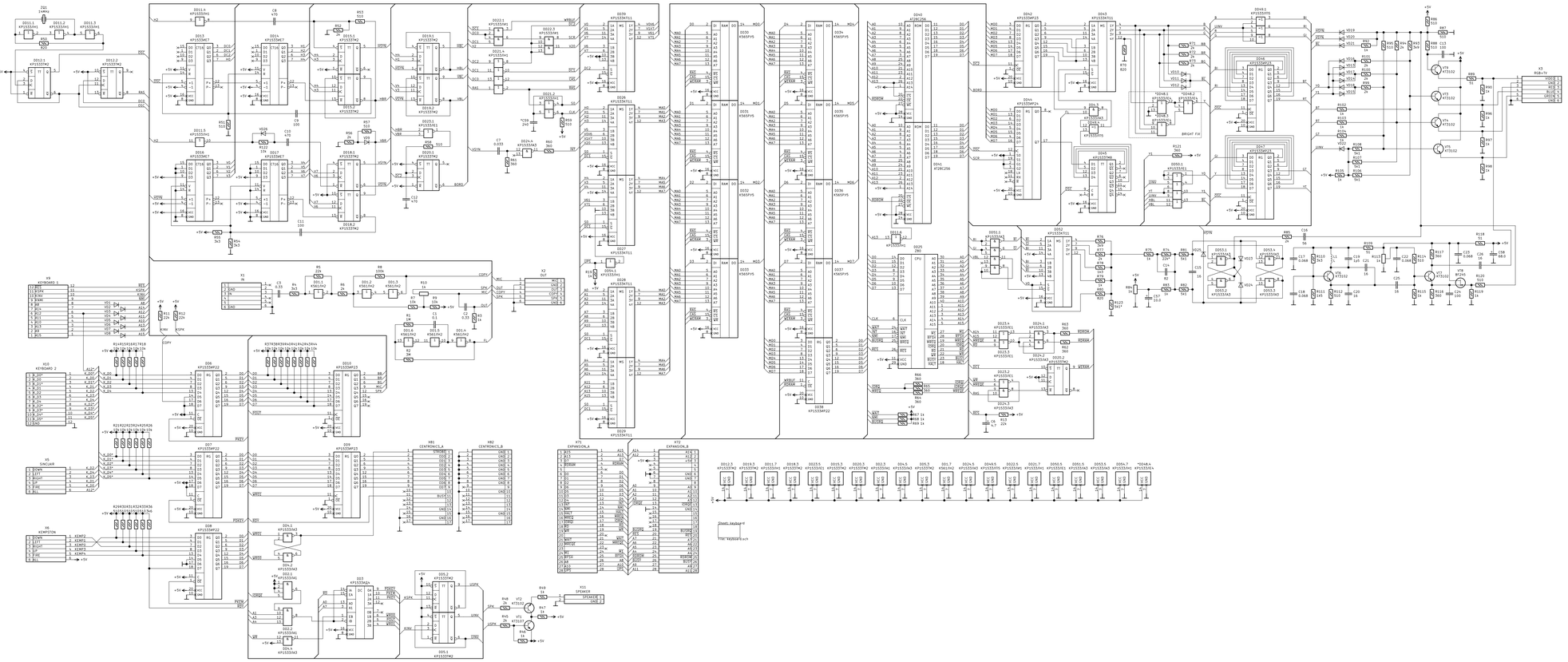

Kamil Karimov

Sheet: /

File: Quorum-64_fixed.sch

Title: Quorum 64

Size: A3	Date: 2019-12-14	Rev: 1.12
KiCad E.D.A. kicad 5.1.4+dfsg1-2		Id: 1/2

UncleRus

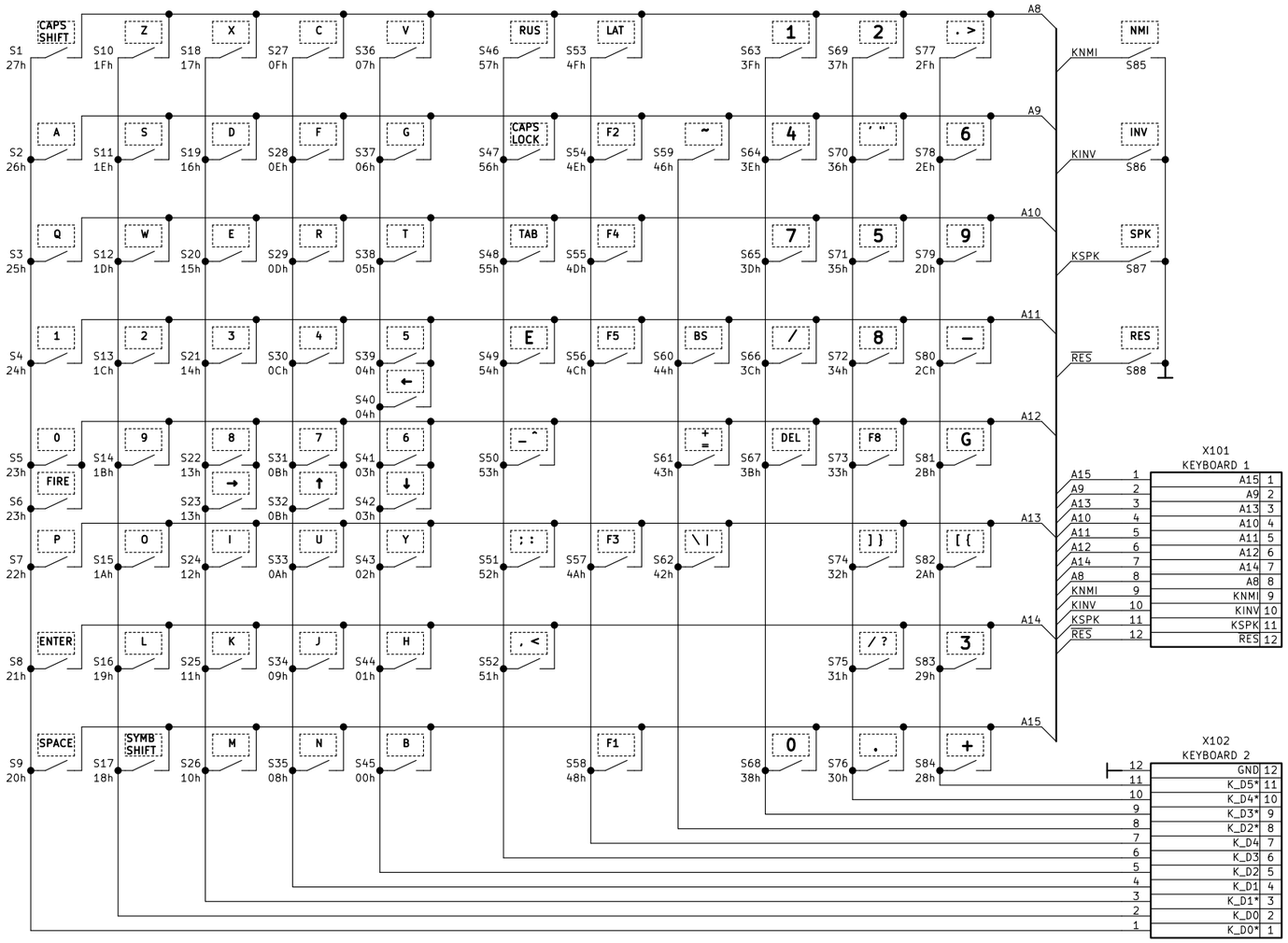

Kamil Karimov

Sheet: /keyboard/
File: keyboard.sch

Title: Quorum/Magic keyboard

Size: A3	Date: 2019-12-13	**Rev: 1.1**
KiCad E.D.A. kicad 5.1.4+dfsg1-2		Id: 2/2

Quorum/Magic Keyboard