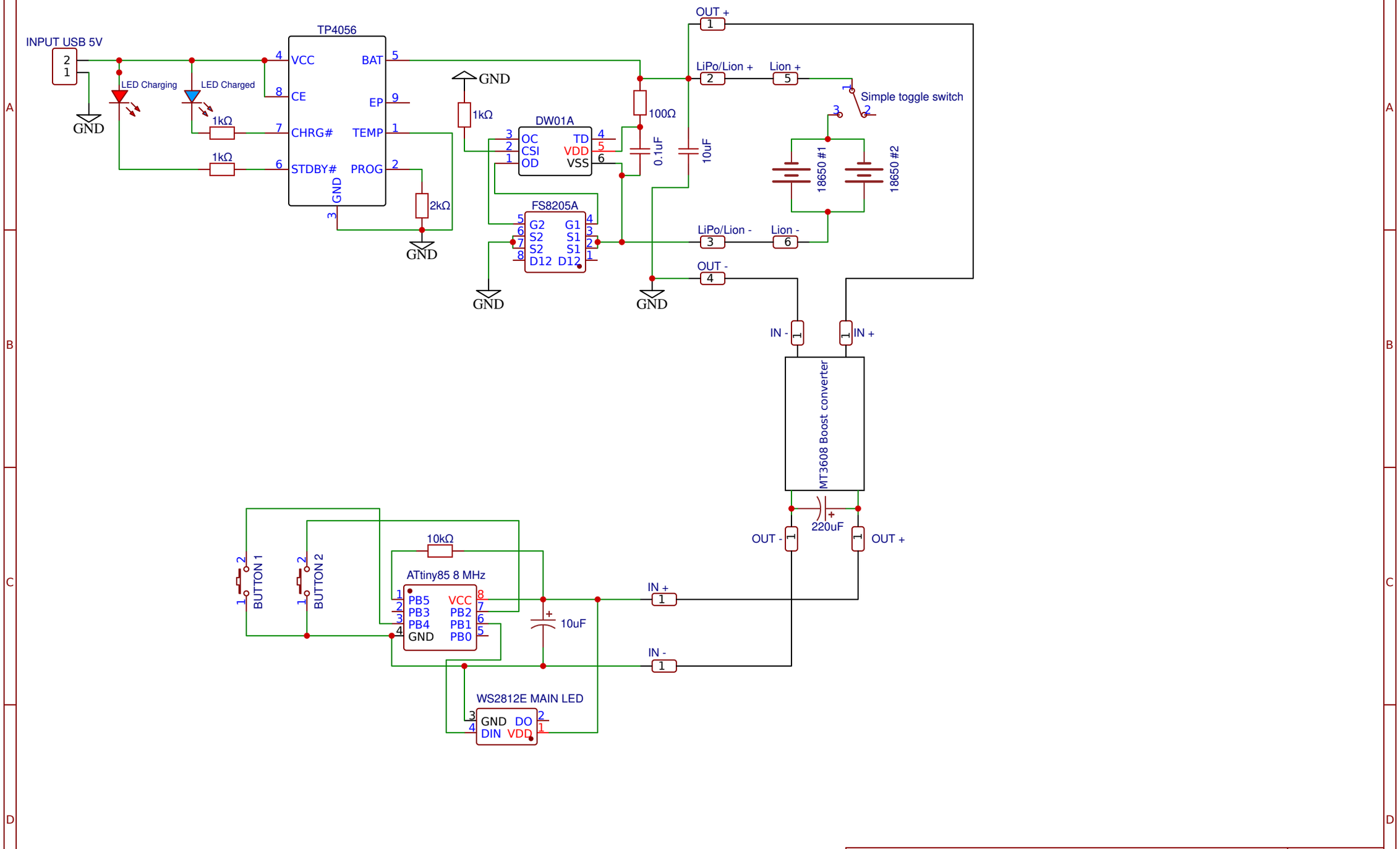

TITLE: Simple LED Lamp		REV: 1.0
EasyEDA	Company: None	Sheet: 1/1
	Date: 2022-08-15 Drawn By: Vassterak	