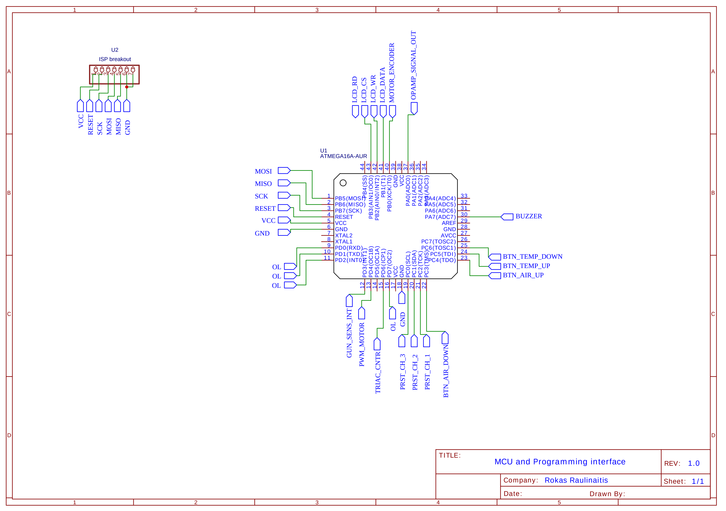
U2
ISP breakout
VCC
RESET
SCK
MOSI
MISO
GND
U1
ATMEGA16A-AUR
MOSI
MISO
SCK
RESET
VCC
GND
OL
OL
OL
LCD_RD
LCD_CS
LCD_WR
LCD_DATA
MOTOR_ENCODER
OPAMP_SIGNAL_OUT
BUZZER
BTN_TEMP_DOWN
BTN_TEMP_UP
BTN_AIR_UP
GLN_SRSN_INT1
PWM_MOTOR
TRIAC_CNTR
PRST_CH_3
PRST_CH_2
PRST_CH_1
BTN_AIR_DOWN
TITLE:
MCU and Programming interface
REV: 1.0
Company: Rokas Raulinaitis
Sheet: 1/1
Date:
Drawn By:

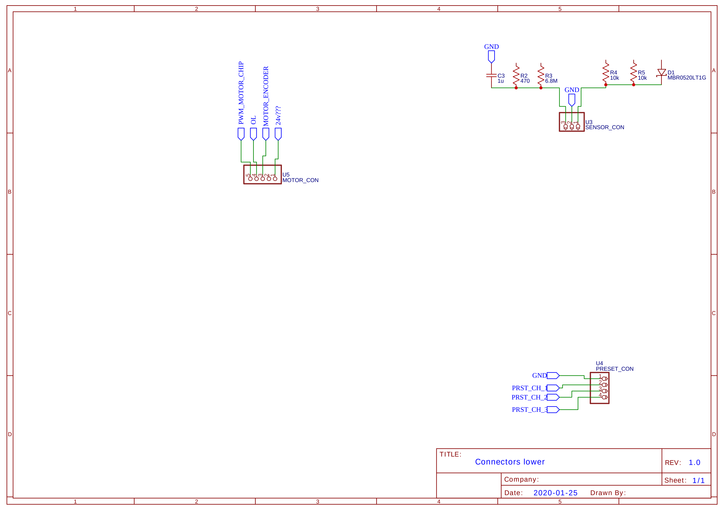
PWM_MOTOR_CHIP
OL
MOTOR_ENCODER
5V(?)
U5
MOTOR_CON
GND
C3
1u
R2
470
R3
6.8M
R4
10k
R5
10k
D1
MBR0520LT1G
GND
U3
SENSOR_CON
U4
PRESET_CON
GND
PRST_CH_
PRST_CH_
PRST_CH_
TITLE:
Connectors lower
REV: 1.0
Company:
Sheet: 1/1
Date: 2020-01-25
Drawn By:

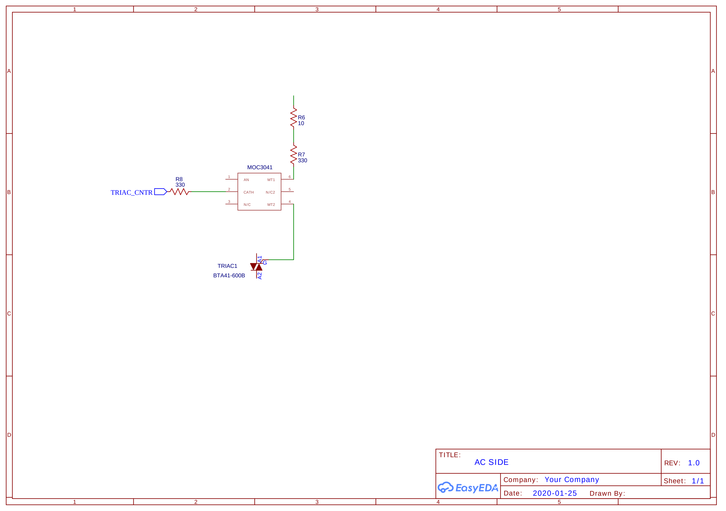
R6
10
R7
330
MOC3041
TRIAC_CNTR
R8
330
TRIAC1
BTA41-600B
TITLE:
AC SIDE
REV: 1.0
Company: Your Company
Sheet: 1/1
Date: 2020-01-25
Drawn By:

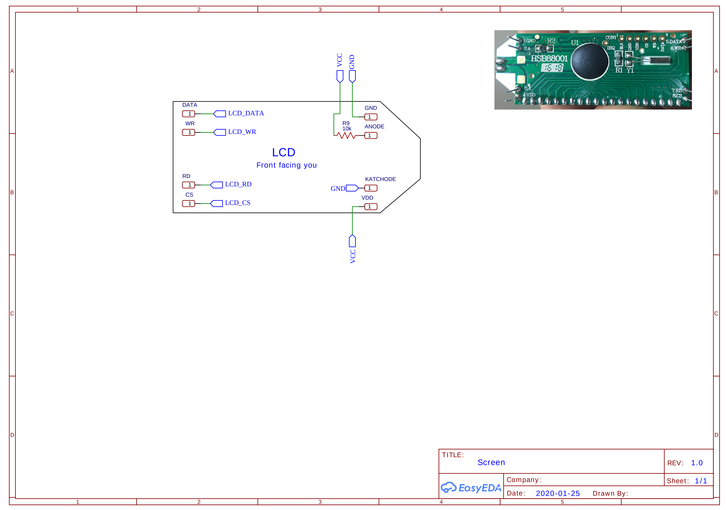
VCC
GND
DATA
LCD_DATA
WR
LCD_WR
R9
10k
GND
ANODE
LCD
Front facing you
RD
LCD_RD
CS
LCD_CS
GND
KATCHODE
VDD
VCC
TITLE:
Screen
REV: 1.0
Company:
Sheet: 1/1
Date: 2020-01-25
Drawn By:

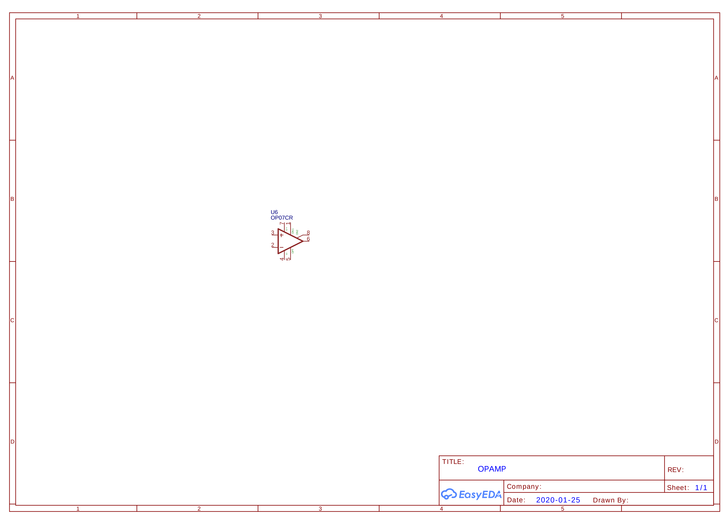
U6
OP07CR
TITLE:
OPAMP
REV:
Company:
Sheet: 1/1
Date: 2020-01-25
Drawn By: