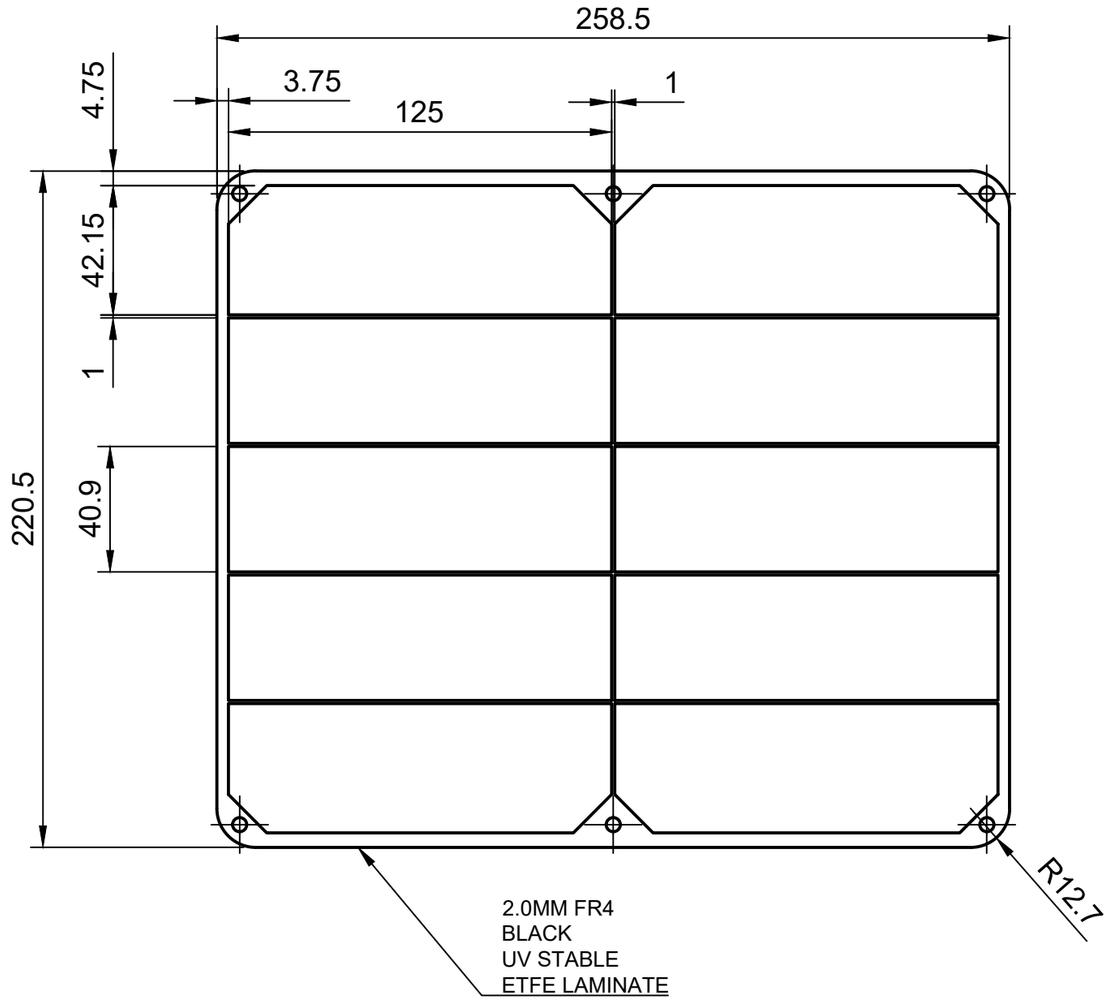

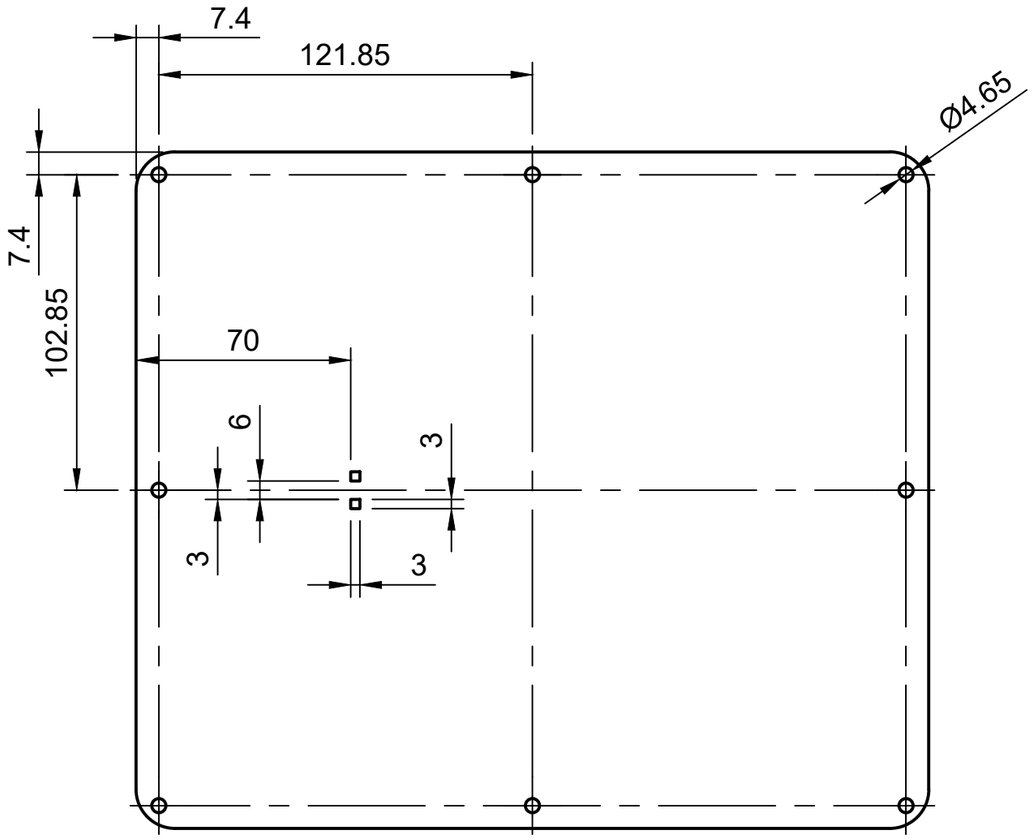

Notes:

1. Substrate: 2.0mm BLACK FR4 PCB
2. Total Panel Thickeness: ~2.5mm
3. Wire or Solder Pads: Solder Pads
4. Coating: ETFE Laminate + High Quality EVA
5. All materials RoHS compliant
6. Testing Procedure: 85°C, 85% Humidity, 200 hours
7. Edge: Clean cut, black edge

Electrical Specifications:

Cells: +22% SunPower
Tolerance: ±10%
Voc: 6.6V
Vp: 5.5V
Isc: 2120mA
Ip: 1920mA
Wp: 10.56W

Dept.	Technical reference	Created by	Approved by
ENG.	+/-0.1mm	TK 2017/2/21	SM 2017/4/4
		Document type: PRODUCTION	Document status: APPROVED
		Title: Voltaic Systems 10W Panel Layout 1 Rev. 2	DWG No.: VS_4_L1_R2
			Rev. 2 / Date of issue 2017/4/4 / Sheet 1/2