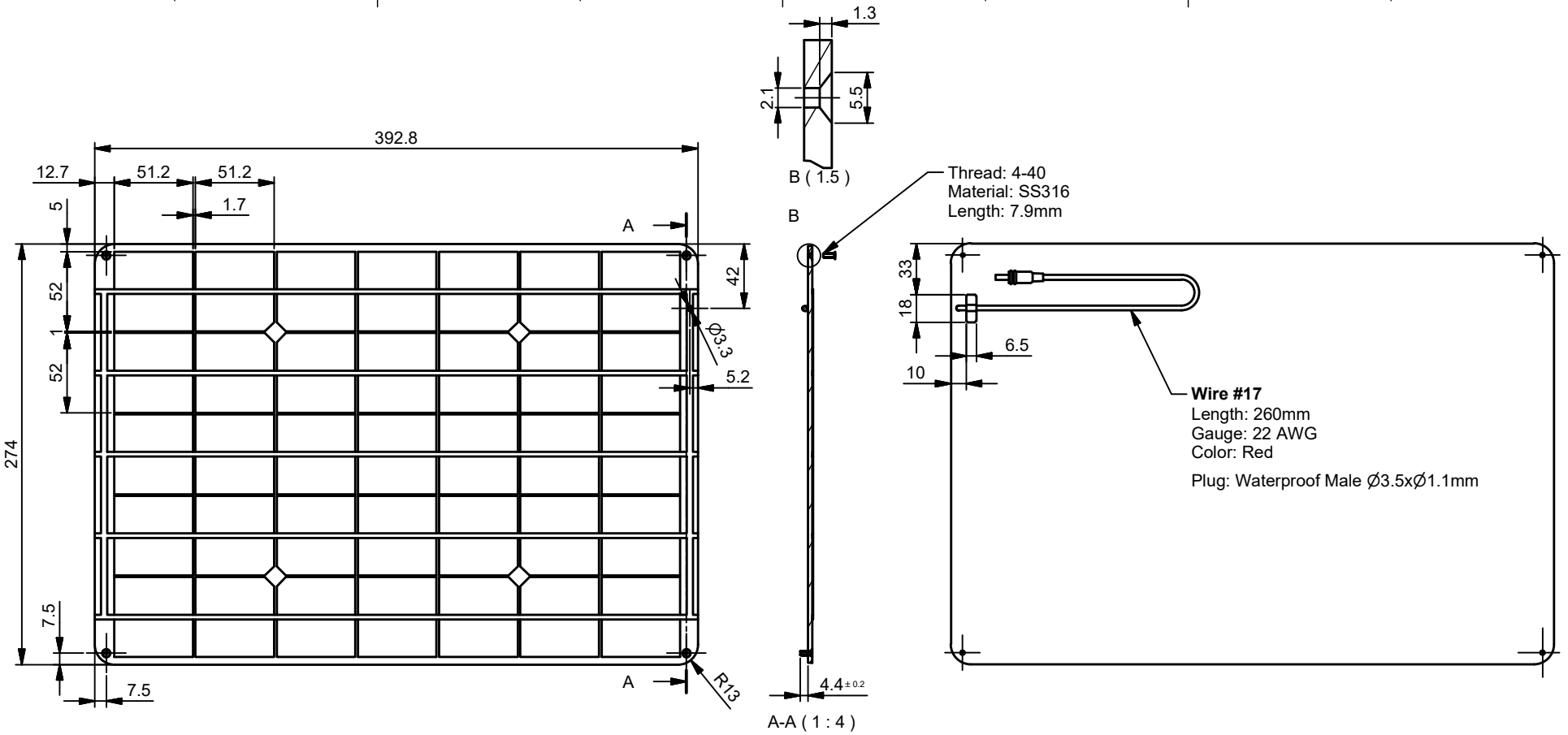

NOTES:
1. All materials RoHS compliant
2. Tape over all electrical connections
3. Total Panel Thickness (not including screws): 4.5-5.0mm

Voltaic

This document contains proprietary information and should not be copied or shared without the consent of Voltaic Systems.

FILE DETAILS	SUBSTRATE	HARDWARE
PRODUCT NAME: **17W 18V 274x392.8mm**	SIZE: 274x392.8mm	WIRE: Male 3.5x1.1mm 260mm
DWG. NO. 17_18_274x392.8_R1	MATERIAL: 3.0mm AL-Plastic Composite	WIRE COLOR: Red
DWG. TYPE: Production	COLOR: Silver / Charcoal	WIRE NO. Wire 17
SCALE: 1:3 UNITS: MM TOLERANCE: ±0.1mm SHEET: 1/1	COATING: Urethane	STRAIN RELIEF: Metal
CREATED BY: TK DATE: 2017/7/20	TAPE: 3mm + 4mm Black	SCREWS: C-MPSCRS028X0079-KM#
REV. 1 CHANGE: DATE: CHK'D BY: JC	TEMP. RANGE: -40*C - 85*C [-40*F - 185*F]	NUTS: None

POWER		
Spec. Tolerance: ±10% (Vp,Ip)		
Cell Supplier: Solar World		
Cell: Efficell M C4 3BB 4.59W		
Cell Efficiency: +19%		
MC	35	pcs
Voc	22.4	V
Vp	18.9	V
mAsc	990	mA
mAp	930	mA
Wp	17.6	W