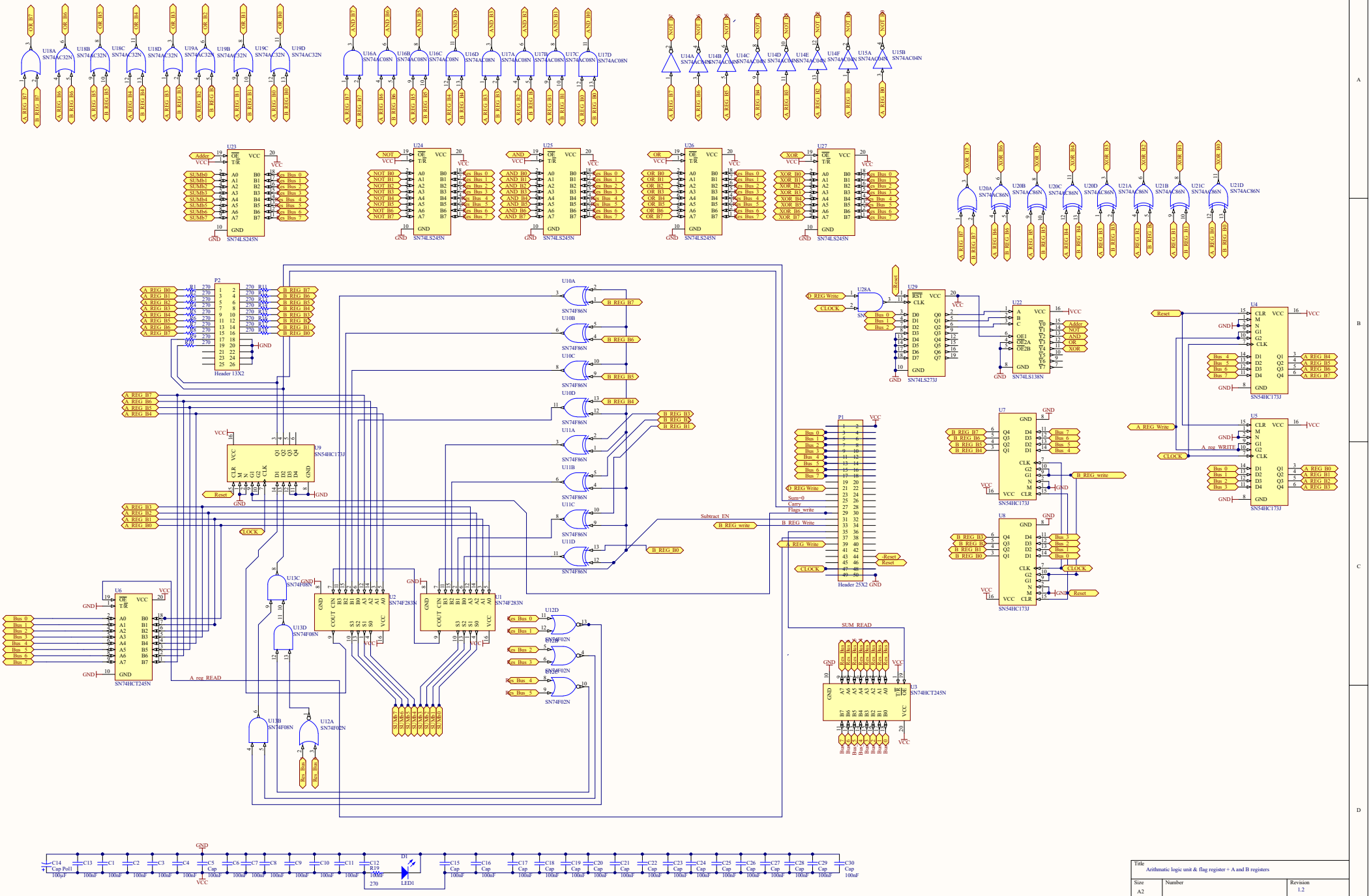

Title	Arithmatic logic unit & flag register + A and B registers		
Size	Number		Revision
A2			1.2
Date:	21/01/2019	Sheet 3 of 10	
File:	C:\Users\...\Arithmatic logic unit.SchDoc	Drawn By:	William Fleete