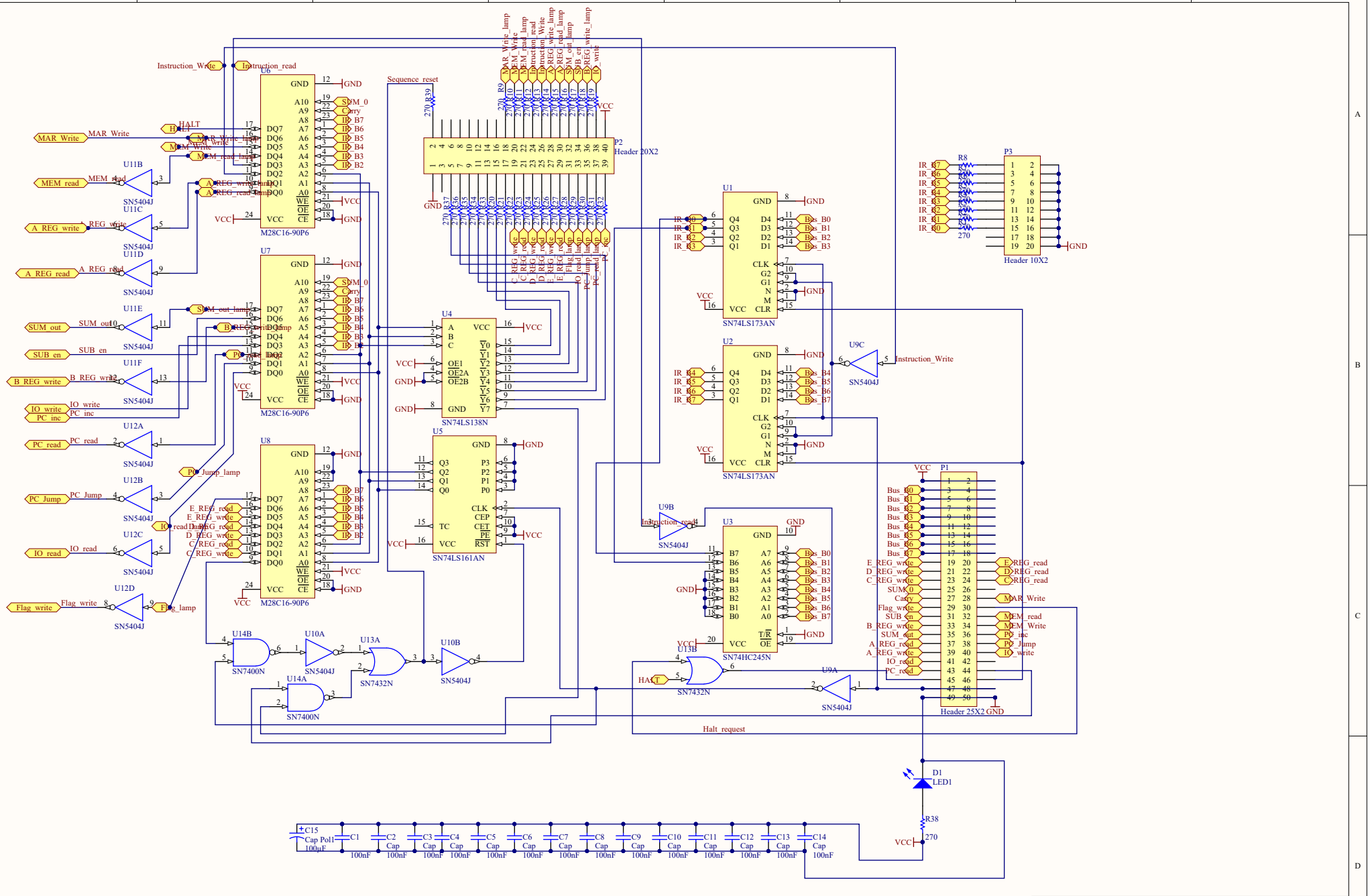

Title		
Instruction register + control		
Size: A3	Number	Revision: 1.1
Date: 4/01/2019		Sheet4 of 10
File: C:\Users\..\IR&control.SchDoc		Drawn By: William Fleete