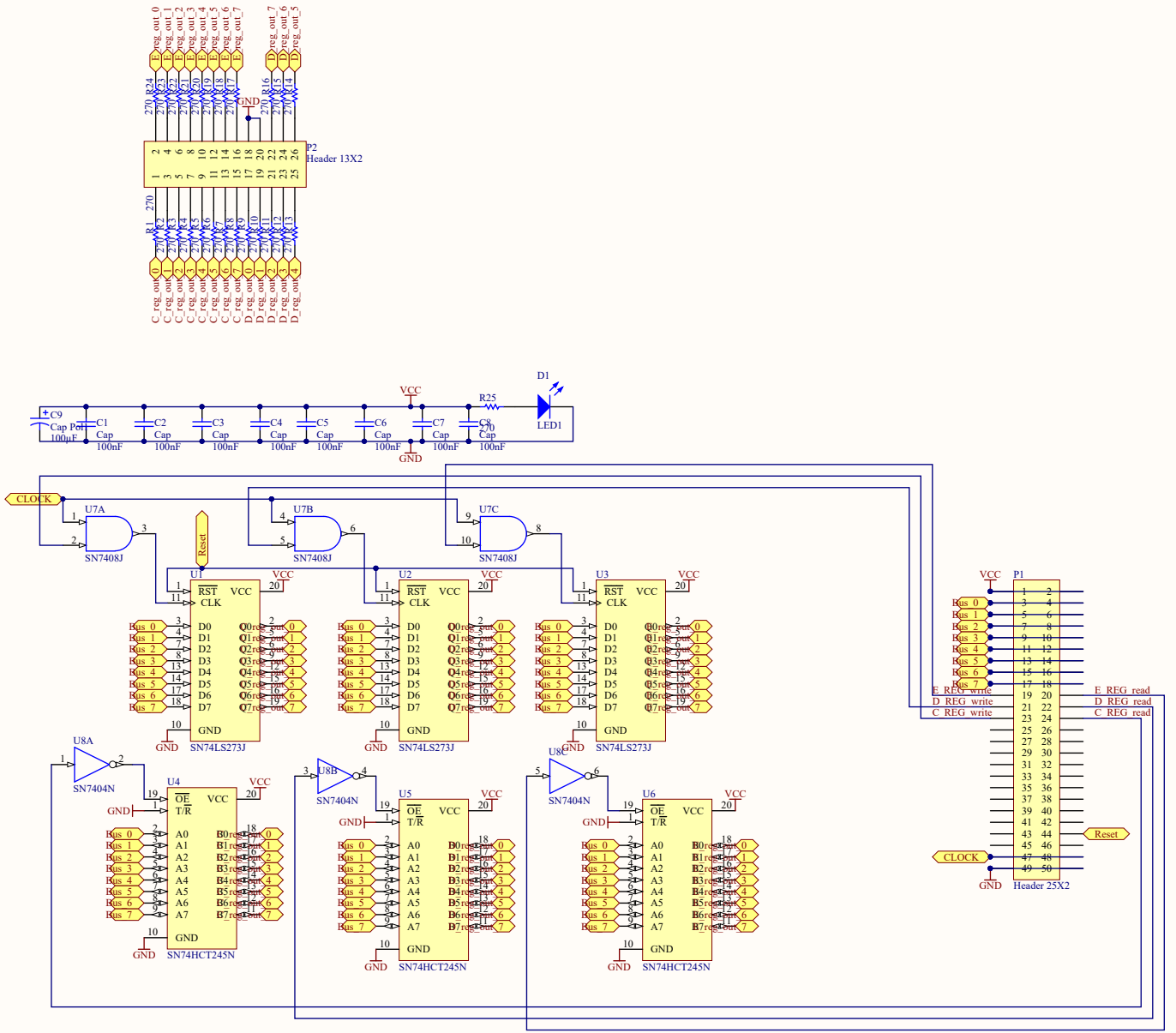

Title: General purpose hardware registers		
Size: A3	Number	Revision: 1.1
Date: 4/01/2019		Sheet 8 of 10
File: C:\Users\..\Register board.SchDoc		Drawn By: William Fleete