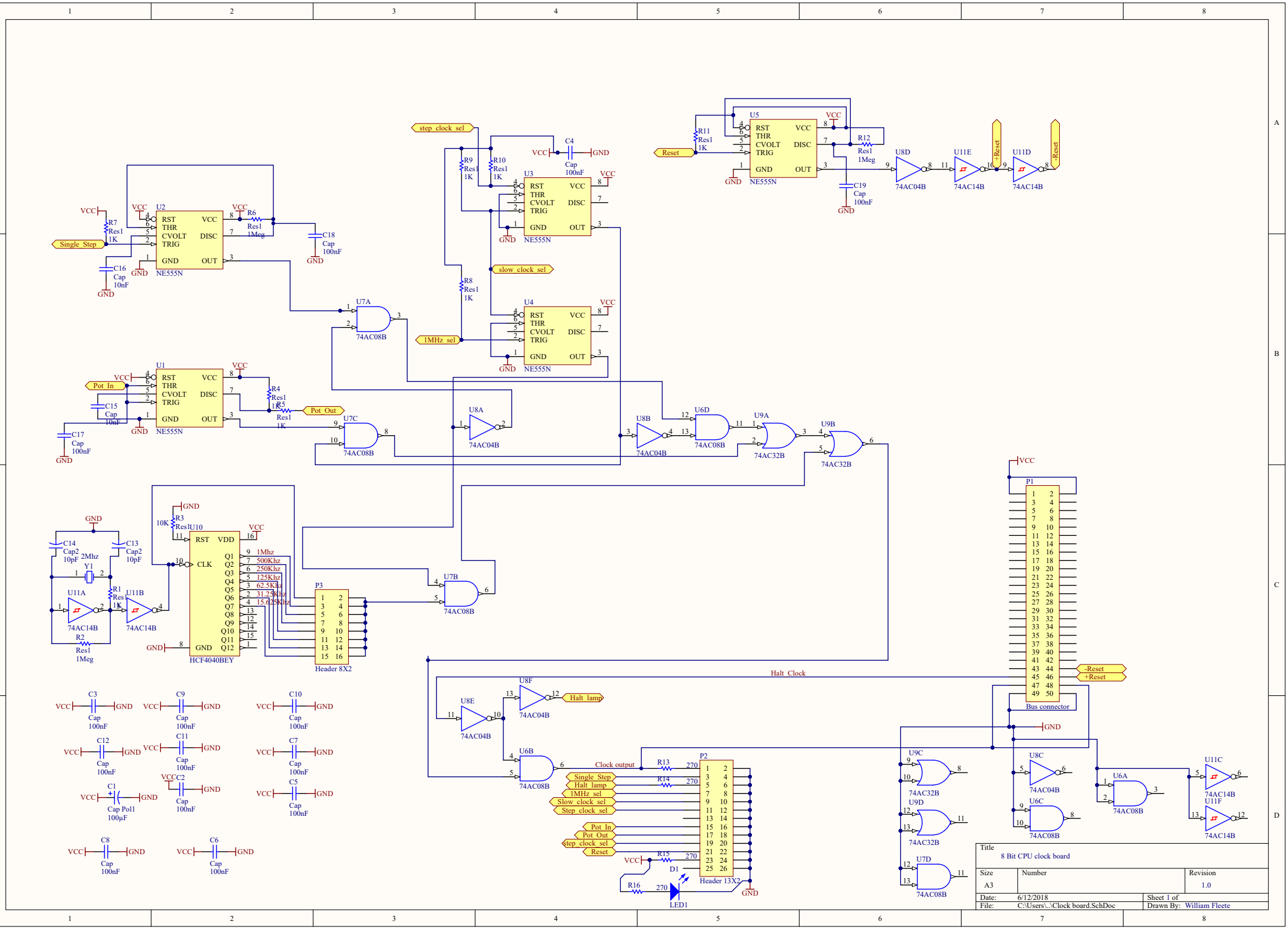
U2
NE555N
U1
NE555N
U3
NE555N
U4
NE555N
U5
NE555N
U7A
74AC08B
U7B
74AC08B
U7C
74AC08B
U7D
74AC08B
U8A
74AC04B
U8B
74AC04B
U8C
74AC04B
U8D
74AC04B
U8E
74AC04B
U8F
74AC04B
U6A
74AC08B
U6B
74AC08B
U6C
74AC08B
U6D
74AC08B
U9A
74AC32B
U9B
74AC32B
U9C
74AC32B
U9D
74AC32B
U11A
74AC14B
U11B
74AC14B
U11C
74AC14B
U11D
74AC14B
U11E
74AC14B
U11F
74AC14B
U10
HCF4040BEY
P1
Bus connector
P2
Header 13X2
P3
Header 8X2
Y1
2Mhz
LED1
D1
Single Step
Pot In
Pot Out
step clock sel
slow clock sel
1MHz sel
Reset
Halt Clock
Halt lamp
Clock output
-Reset
+Reset
VCC
GND
Title
8 Bit CPU clock board
Size
A3
Number
Revision
1.0
Date: 6/12/2018
File: C:\Users\..\Clock board.SchDoc
Sheet 1 of
Drawn By: William Fleete

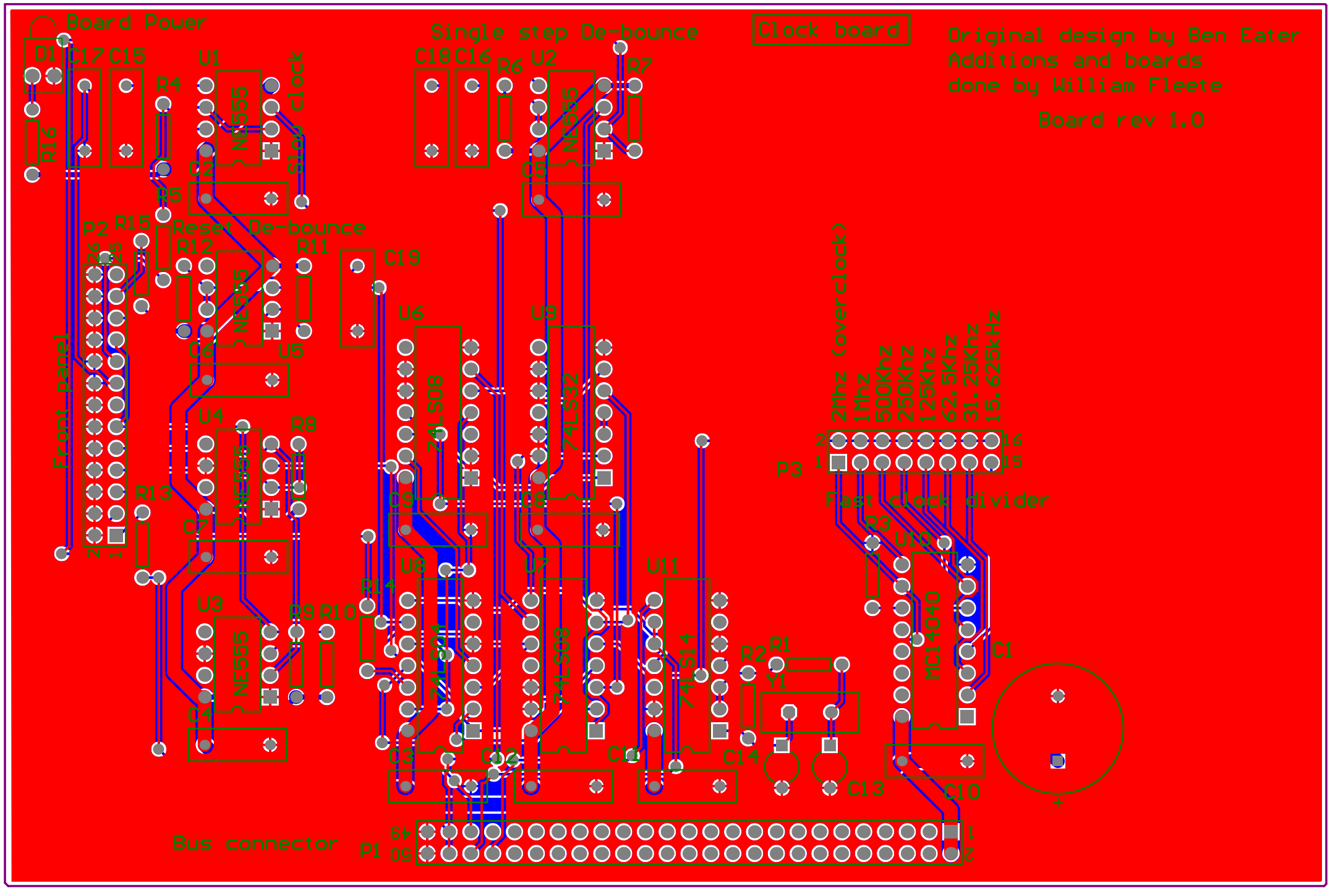
Board Power
Single step De-bounce
Clock board
Original design by Ben Eater
Additions and boards
done by William Fleete
Board rev 1.0
D1
C17
C15
R16
R4
U1
NE555
clock
C2
R5
C18
C16
R6
U2
NE555
R7
C5
R15
P2
Reset De-bounce
R12
R11
C19
NE555
C6
U5
U6
U9
74LS08
74LS32
Front panel
U4
R8
NE555
C7
R13
C9
C8
2Mhz (overclock)
1Mhz
500Khz
250Khz
125Khz
62.5Khz
31.25Khz
15.625Khz
P3
Fast clock divider
P3
U10
MC14040
C1
U3
NE555
R9
R10
C4
R14
U8
74LS04
U7
74LS08
U11
74LS14
R2
R1
Y1
C3
C12
C11
C14
C13
C10
Bus connector
P1