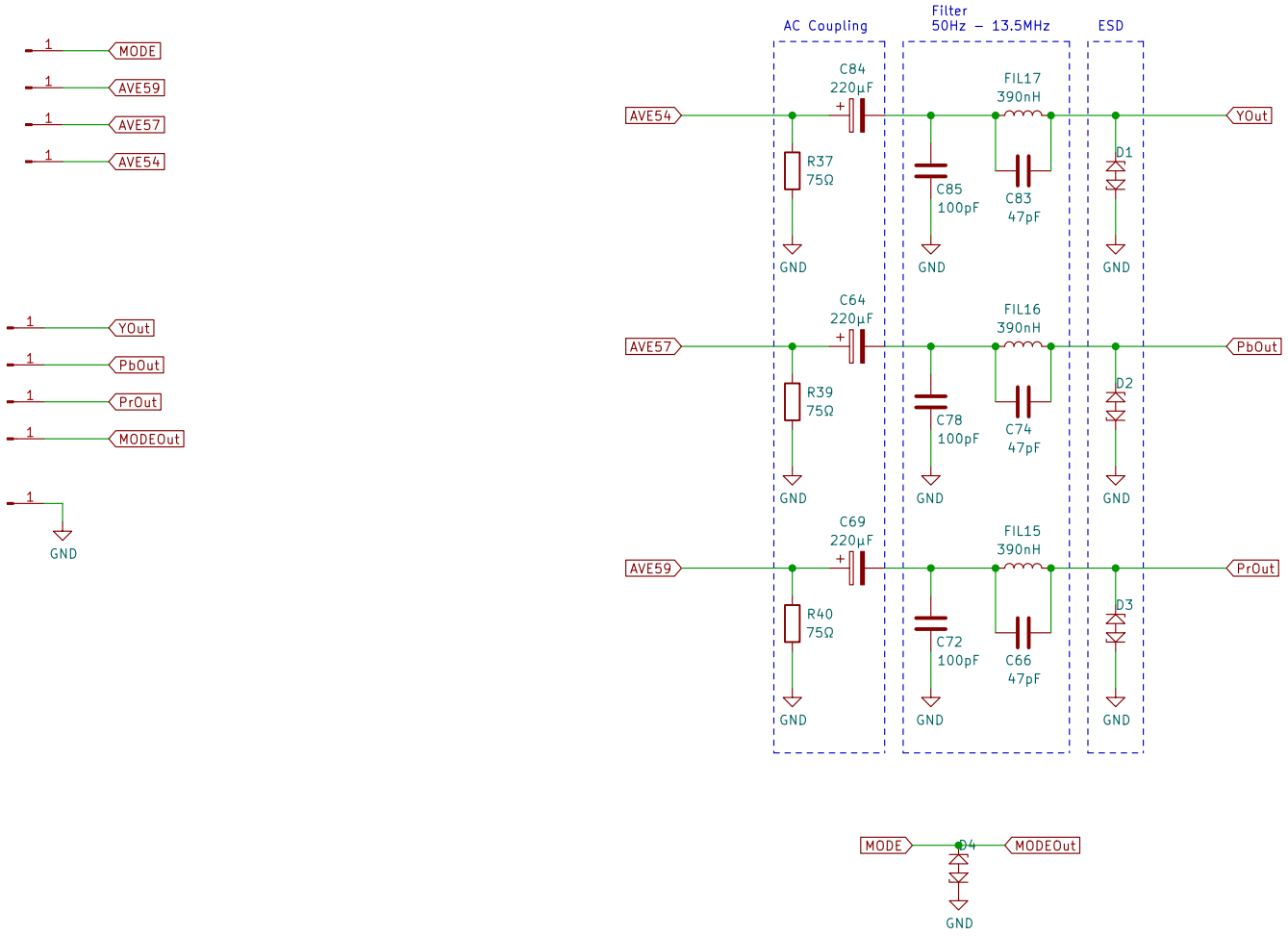

RVL-CPU-30 and earlier boards utilises
50pF unpolarized capacitors
numbered C62, C79 and C86 instead of D1-D3.
Knowing the value of either is trivial
for completing a safe replacemement
of the component video circuitry.

Created By:
Job
Devnol
Wii mini Hacking

Sheet: /
File: miniRGBii.kicad_sch

Title: miniRGBii Schematic

Size: A4	Date:	**Rev: 1.0**
KiCad E.D.A. kicad (6.0.0-0)		Id: 1/1