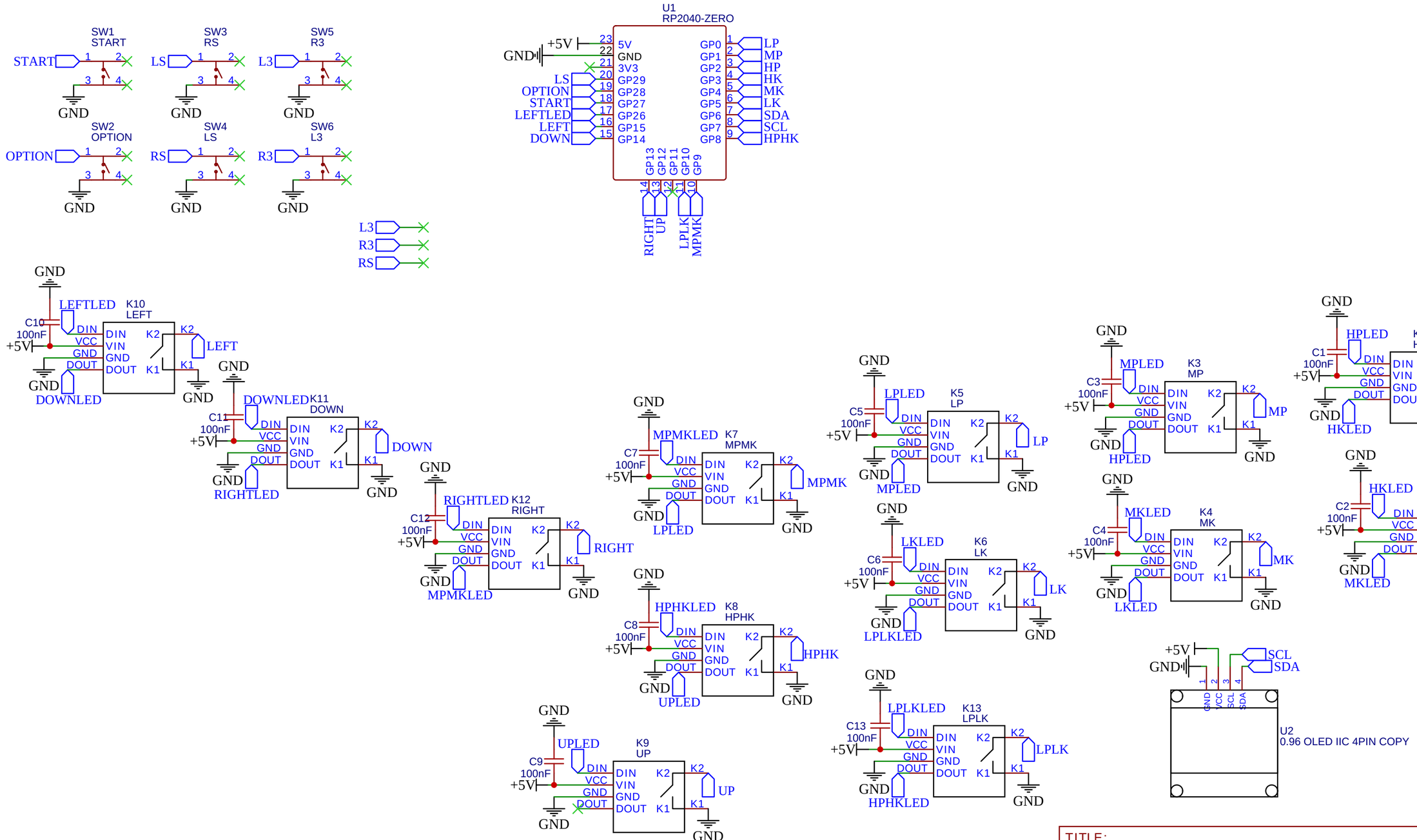

TITLE: flatbox_rev5_RGB+OLED	REV: 1.0
嘉立创EDA Company: Xchiliarch	Sheet: 1/1
Date: 2023-10-09 Drawn By: Xchiliarch	