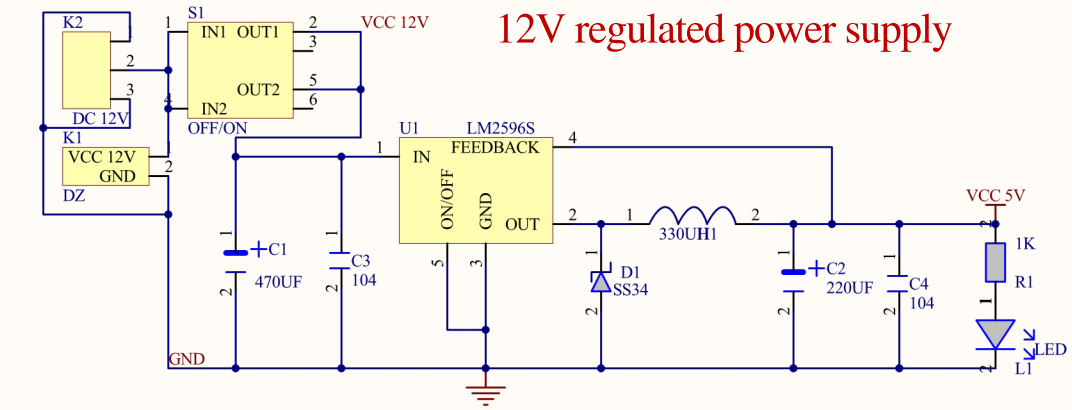

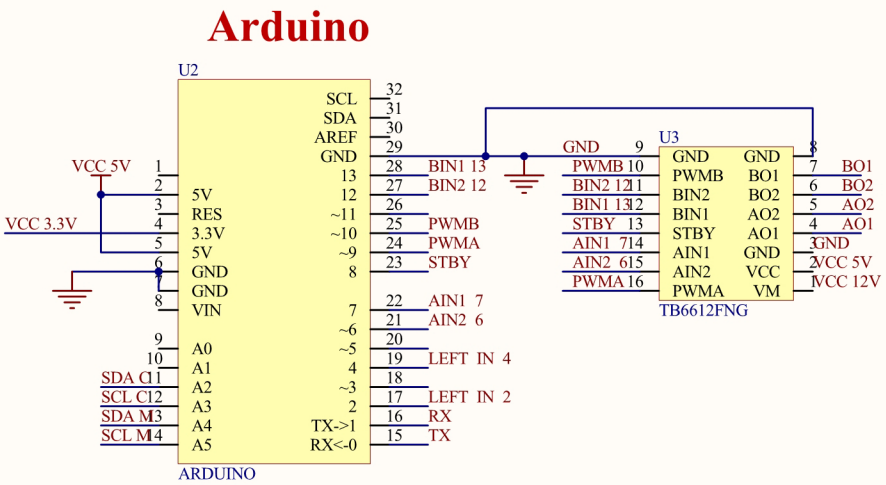

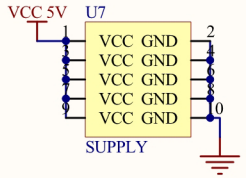

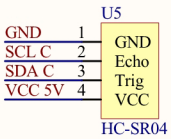

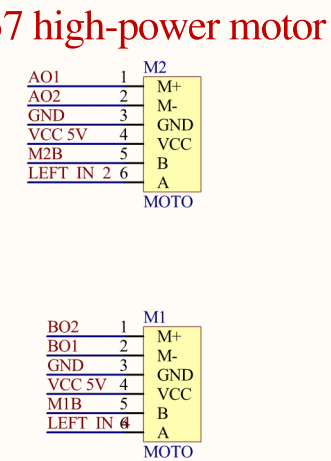

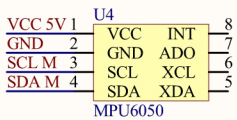

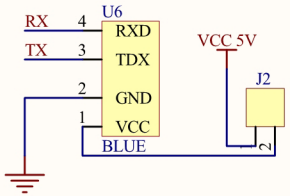

Title	Arduino Balance Car	
Size A4	Number	Revision
Date: 2016-9-21		Sheet of
File: D:\软件\..\balance car.SchDoc		Drawn By: