OXFORD
HIGHER EDUCATION

FREE
ONLINE RESOURCES
For Teachers and Students

Includes university question papers with solutions

Basic Electrical Engineering

FEC 105 Basic Electrical Engineering
Based on the 2016-17 syllabus of University of Mumbai

B.R. Patil

Contents

Preface *iii*
Syllabus *v*
Symbols and Acronyms *ix*

1. DC Circuits **1**
1.1 Introduction *1*
1.2 Electric Current *2*
1.3 Electric Potential *2*
1.4 Potential Difference *3*
1.5 Resistance *4*
1.5.1 Effect of Temperature on Resistance *4*
1.5.2 Effect of Temperature on Temperature Coefficient *5*
1.6 Ohm's Law *9*
1.7 Electric Power *10*
1.8 Electrical Energy *11*
1.9 DC Circuit *12*
1.9.1 Series Circuit *12*
1.9.2 Parallel Circuit *13*
1.10 Types of Sources *33*
1.10.1 Ideal Voltage Source *33*
1.10.2 Ideal Current Source *33*
1.11 Source Transformation *33*
1.12 Kirchhoff's Laws *39*
1.12.1 Kirchhoff's Current Law (KCL) *40*
1.12.2 Kirchhoff's Voltage Law (KVL) *41*
1.12.3 Sign Conventions *41*
1.12.4 Solving Circuit Problems by using Kirchhoff's Laws *42*
1.13 Star–Delta (Y–Δ) Transformation *56*
1.13.1 Delta (Δ) to Star (Y) Transformation *56*
1.13.2 Star (Y) to Delta (Δ) Transformation *57*
1.14 Maxwell's Mesh Current Method *69*
1.15 Nodal Analysis (Node Voltage Method) *77*
1.16 Superposition Theorem *89*
1.17 Thevenin's Theorem *101*
1.18 Norton's Theorem *128*
1.19 Maximum Power Transfer Theorem *145*

2. AC Circuits **171**
2.1 AC Fundamentals *171*
2.1.1 Alternating Voltage and Current *172*
2.1.2 Sinusoidal Alternating Voltage and Current *172*
2.1.3 Generation of Alternating Voltage *173*
2.1.4 AC Terminology *175*
2.1.5 Standard Forms of Alternating Quantity *176*
2.1.6 Values of Alternating Voltage and Current *179*
2.1.7 Form Factor and Peak Factor *188*

2.1.8 Phase Angle and Phasor *198*
2.1.9 In Phase, Out of Phase, and Phase Difference *200*
2.1.10 Phasor Algebra *202*
2.1.11 Addition and Subtraction of Alternating Quantities *203*
2.1.12 Fundamental AC Circuits *212*
2.2 AC Series Circuits *225*
2.2.1 *R-L* Series Circuit *226*
2.2.2 *R-C* Series Circuit *228*
2.2.3 *R-L-C* Series Circuit *230*
2.2.4 Analysis of AC Series Circuit *232*
2.2.5 Series Resonance *262*
2.3 AC Parallel Circuits *278*
2.3.1 Phasor Diagram *279*
2.3.2 Phasor Algebra *279*
2.3.3 Admittance (Y) *301*
2.3.4 Parallel Resonance *312*
2.3.5 Comparison of Series and Parallel Resonant Circuits *316*

3. Three-Phase Circuits **324**
3.1 Introduction *324*
3.2 Generation of Three-Phase Voltages *325*
3.2.1 Advantages of Three-Phase System *326*
3.2.2 Some Concepts *327*
3.3 Interconnection of Three Phases *327*
3.3.1 Star or Wye Connection *328*
3.3.2 Delta Connection *331*
3.4 Power Triangle for Three-Phase Load *334*
3.5 Comparison between Star Connection and Delta Connection *335*
3.6 Three-Phase Power Measurement *349*
3.6.1 One-Wattmeter Method *350*
3.6.2 Two-Wattmeter Method *351*
3.6.3 Effect of Load Power Factor on Wattmeter Readings *354*

4. Single-Phase Transformer **364**
4.1 Introduction *364*
4.2 Working Principle *364*
4.3 Construction Details *366*
4.3.1 Core *366*
4.3.2 Two Windings *366*
4.4 EMF Equation of a Transformer *367*
4.5 Transformation Ratio (*K*) *368*
4.6 Actual (Practical) and Ideal Transformers *369*
4.7 Transformer Losses *371*
4.8 Transformer Parameters *372*
4.8.1 Winding Resistance *372*
4.8.2 Leakage Reactance *373*
4.8.3 Impedance *374*
4.9 Transformer on No-Load *375*
4.10 Transformer on Load *377*
4.10.1 Phasor Diagram: Without Considering Winding Resistance and Magnetic Leakage *378*

4.10.2 Phasor Diagram: Considering Winding Resistance and Magnetic Leakage *379*
4.11 Transformer Ratings *380*
4.12 Equivalent Circuit *390*
4.13 Transformer Tests *392*
4.13.1 Open-Circuit Test (No-Load Test) *392*
4.13.2 Short Circuit (SC) Test *394*
4.14 Regulation of a Transformer *396*
4.15 Efficiency of a Transformer *398*
4.16 Condition for Maximum Efficiency *399*
4.17 All-Day Efficiency *402*

5. DC Machines **426**
5.1 Introduction *426*
5.2 Principle and Working of DC Machines *426*
5.2.1 DC Generator *427*
5.2.2 DC Motor *430*
5.3 Construction of DC Machine *432*
5.3.1 Types of Armature Winding *435*
5.4 EMF Equation of DC Generator *436*
5.5 Types of DC Generators *537*
5.5.1 Separately Excited DC Generator *438*
5.5.2 Self-excited DC Generator *439*
5.6 Operation of DC Motor and Back EMF *443*
5.7 Torque Equation of a DC Motor *445*
5.8 Types of DC Motor *446*
5.8.1 Shunt Motor *446*
5.8.2 Series Motor *447*

Appendix A: Fundamentals of Electricity *449*
Appendix B: Capacitor *457*
Appendix C: Relation between Magnetic and Electric Fields *468*
Appendix D: Additional Examples *493*
Bibliography *520*
Solved Question Papers (from May 2014 to December 2016) *521*
Model Question Papers I & II *607*

P	number of poles; active power (W, kW, MW)
P_L	power delivered to the load
P_m	mechanical power developed
pd	potential difference (V)
pf	power factor
q	charge (C)
Q	constant value of charge (C); reactive power (VAR, kVAR, MVAR)
R, r	resistance (Ω)
R_a	armature resistance (Ω)
R_L	load resistance (Ω)
R_T, R_{eq}	total or equivalent resistance (Ω)
R_{TH}	Thevenin's equivalent resistance (Ω)
R_N	Norton's equivalent resistance (Ω)
rms	root mean square
S	apparent power (VA, kVA); reluctance (AT/Wb)
s	slip in induction motor
sc	short circuit
t	temperature (°C); unit of time (sec)
T	torque (Nm); time period (sec)
v	instantaneous voltage
V	rms voltage (V); dc voltage (V)
$v_s(t)$	instantaneous time-varying voltage
V_{sc}	short-circuit voltage
V_{TH}	Thevenin's voltage
V_N	Norton's voltage
V_S	source voltage
V_{ph}	phase voltage
V_L	line voltage
$\overline{V}$	voltage phasor
w	work done (Nm); energy in joules (J)
W_e	eddy current loss (W)
W_h	hysteresis loss (W)
X	reactance (Ω)
X_L	inductive reactance (Ω)
X_C	capacitive reactance (Ω)
Y	admittance (mho)
$\overline{Y}$	phasor admittance (mho)
Y – Δ	star–delta
$\overline{Z}$	impedance phasor
Z	impedance (Ω)
Z_L	load impedance (Ω)

1

DC Circuits

1.1 Introduction

Electricity is an indispensable part of our daily life. Although the exact nature of electricity is unknown, a great deal is known about what it can do. By mere pressing a switch, buildings are lighted, wheels are turned, meals are cooked, distant voices are heard, and countless other tasks—ordinary and extraordinary—are performed. The study of nature of electricity has been attracting the attention of scientists for hundreds of years. Several theories about electricity were developed through experiments and by observation of its behaviour. The only theory that has survived over the years to explain the nature of electricity is the *modern electron theory of matter*. This theory has been the result of research works conducted by scientists such as Sir William Crooks, J.J. Thomson, Robert A. Millikan, Sir Earnest Rutherford, and Neils Bohr. The main points of this theory are given below:

(i) Every matter is electrical in nature, i.e., it contains particles of electricity, viz. protons and electrons.

(ii) In normal state, in an atom, the number of electrons is equal to the number of protons. Therefore, an atom is neutral as a whole. This explains why a body does not exhibit any charge under ordinary conditions.

(iii) If from a neutral body, some electrons are removed, there occurs a deficit of electrons in the body. Consequently, the body attains a *positive charge*.

(iv) If a neutral body is supplied with electrons, there occurs an excess of electrons. Consequently, the body attains a *negative charge*.

The charge on an electron is so small that it is not convenient to select it as the unit of charge (see Section A.2, Appendix A). In practice, *coulomb* (C) is used as the unit of charge. One coulomb of charge is equal to the charge on 6.28×10^{18} electrons, i.e.,

$$1 \text{ coulomb} = \text{charge on } 6.28 \times 10^{18} \text{ electrons}$$

Thus, when we say that a body has a positive charge of 1 coulomb, it means that it has a deficit of 6.28×10^{18} electrons.

1.2 Electric Current

Flow of free electrons is called **electric current.** A copper strip has a large number of free electrons. When electric pressure or voltage is applied to it, free electrons, being negatively charged, will start moving towards the positive terminal round the circuit as shown in Fig. 1.1. This directed flow of electrons is called electric current. The actual direction of current (i.e., flow of electrons) is from the negative terminal to the positive terminal through the part of the circuit external to the cell. However, prior to the electron theory, it was assumed that current flowed from the positive terminal to the negative terminal of the cell via the circuit. This convention is so firmly established that it is still in use. This assumed current is now called *conventional current.*

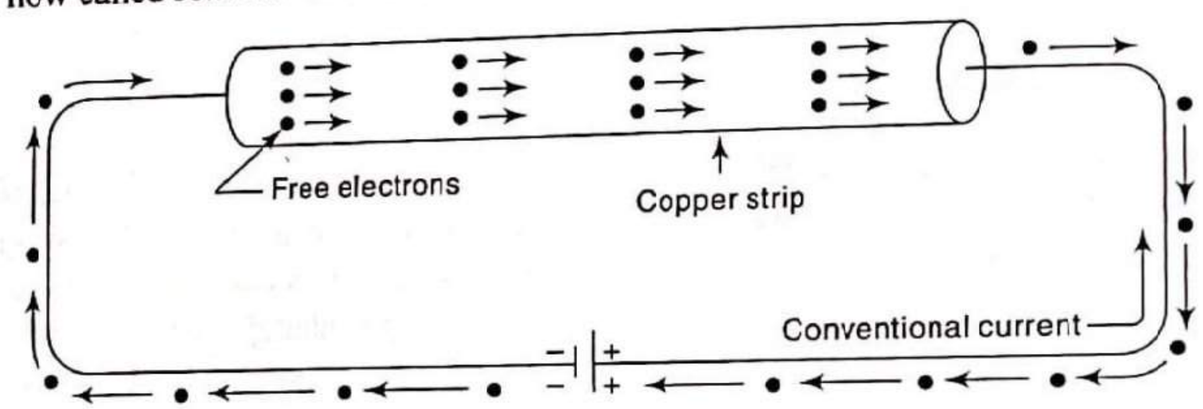

Fig. 1.1 Flow of electric current

The substances that have large number of free electrons will permit the flow of current easily. Such substances are called *conductors*, e.g., copper, zinc, silver, aluminium. On the other hand, atoms of some substances have valence electrons that are tightly held to their nuclei, i.e., they have few free electrons. Such substances will not permit the flow of electric current and are called *bad conductors* or *insulators*, e.g., glass, mica, porcelain.

The strength of electric current I is the rate of flow of electrons, i.e., charge flowing per second.

So, $$\text{Current, } I = \frac{Q}{t}$$

The charge Q is measured in coulomb and time t in second. Therefore, the unit of electric current will be *coulomb/sec*, also known as *ampere* (A). If $Q = 1$ C, $t = 1$ sec, then $I = 1/1 = 1$ A.

One ampere of current is said to flow through a wire if at any section one coulomb of charge flows in one second.

1.3 Electric Potential

A body is neutral under ordinary conditions, i.e., it contains the same number of protons and electrons so that the total positive charge of protons is exactly neutralized by the total negative charge of electrons. A body can be charged by removing the electrons from it or by supplying the electrons to it. Work is done in this process because electrons have to be removed or supplied against the opposing forces. This work done is stored in the body in the form of potential energy. The charged body has the capacity to do work by moving other charges either by attraction or by repulsion. This ability of the charged body to do work is called electric potential.

Thus, the capacity of a charged body to do work is called **electric potential.**

The greater the capacity of a charged body to do work, the greater is its electric potential. Obviously, the work done to charge a body to 1 C will be a measure of its electric potential, i.e.,

$$\text{Electric potential, } V = \frac{\text{Work done}}{\text{Charge}} = \frac{W}{Q}$$

The work done is measured in joule and the charge is measured in coulomb. Therefore, the unit of electric potential will be *joule/coulomb*, also known as *volt* (V). If $W = 1$ J, $Q = 1$ C, then $V = 1/1 = 1$ V.

Thus, when we say that a body has an electric potential of 5 V, it means that every coulomb on a charge possesses an energy of 5 J.

1.4 Potential Difference

The difference in the potentials of two charged bodies is called **potential difference.**

If two bodies have different electric potentials, a potential difference exists between the bodies. Consider two bodies A and B having potentials of 5 V and 3 V respectively as shown in Fig. 1.2(a). Each coulomb of charge on body A has energy of 5 J while each coulomb of charge on body B has energy of 3 J. Clearly, body A is at higher potential than body B.

Fig. 1.2 Potential difference and flow of current

If the bodies A and B are joined through a conductor [see Fig. 1.2(b)], then electrons will flow from body B to body A. When the two bodies attain the same potential, the flow of current stops. Therefore, we arrive at a very important conclusion that current will flow in a circuit only if potential difference exists. No current will flow if there is no potential difference. It may be noted that potential difference is sometimes called voltage.

A device that maintains potential difference between two points is said to develop electromotive force (emf). A simple example is that of a cell or dc generator. Thus, potential difference causes current to flow while an emf maintains the potential difference.

1.5 Resistance

The opposition offered by a substance to the flow of electric current is called **resistance.**

Since current is the flow of free electrons, resistance is the opposition offered by the substance to the flow of free electrons. This opposition occurs because atoms and molecules of the substance obstruct the flow of these electrons. Certain substances (e.g. metals such as silver, copper, aluminium) offer very little opposition to the flow of electric current and are called **conductors.** On the other hand, the substances that offer high opposition to the flow of electric current (i.e. flow of free electrons) are called **insulators**, e.g., glass, rubber, mica, dry wood.

The resistance of a conductor has the following characteristics:

(i) It is directly proportional to the length of the conductor.
(ii) It is inversely proportional to the area of cross section of the conductor.
(iii) It depends on the nature of the material of the conductor.
(iv) It also depends on the temperature of the conductor.

Hence, if R is resistance of a conductor of length l and cross-sectional area A, then

$$R \propto \frac{l}{A} \text{ or } R = \rho\frac{l}{A}$$

where ρ is a constant known as specific resistance or resistivity of the material of the conductor.

The specific resistance of a material is defined as the resistance offered by unit length of the material of unit cross section. If the length is in metre and the cross section is in square metre, then the resistivity is expressed in ohm metre (Ω m).

1.5.1 Effect of Temperature on Resistance

In general, the resistance of a material changes with the change in its temperature. The effect of temperature upon resistance varies according to the type of material as discussed below.

(i) The resistance of pure metals (e.g., copper, aluminium) increases with the increase in temperature. The change in resistance is fairly regular for normal range of temperatures so that temperature–resistance graph is a straight line as shown in Fig. 1.3 (for copper). Since the resistance of metals increases with rise in temperature, they have *positive temperature coefficient of resistance* [see Eq. (1.2)].

(ii) The resistance of electrolytes, insulators (e.g., glass, mica) and semiconductors (e.g., germanium, silicon) decreases with the increase in temperature. Hence, these materials have *negative temperature coefficient of resistance* [see Eq. (1.2)].

(iii) The resistance of alloys increases with the rise in temperature but this increase is very small and irregular. For some high-resistance alloys (e.g., eureka, manganin) the change in resistance is negligible over a wide range of temperatures.

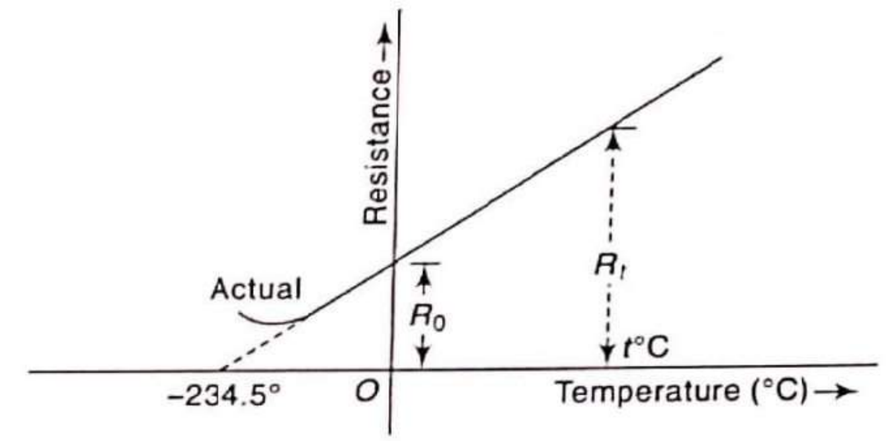

Fig. 1.3 Temperature–resistance graph for copper

The change in resistance of a material with rise in temperature can be expressed by means of temperature coefficient of resistance. Consider a conductor having resistance R_0 at 0°C and R_t at t°C. Then for the normal range of temperatures, the increase in resistance, i.e., $(R_t - R_0)$,

(i) is directly proportional to the initial resistance;
(ii) is directly proportional to the rise in temperature;
(iii) also depends on the nature of the material.

Hence,

$$R_t - R_0 \propto R_0\, t$$

or

$$R_t - R_0 = \alpha_0 R_0\, t \tag{1.1}$$

where α_0 is a constant and is called the temperature coefficient of resistance at 0°C. Its value depends on the nature of the material and the temperature.

So,

$$\alpha_0 = \frac{R_t - R_0}{R_0 t} \tag{1.2}$$

Hence, **temperature coefficient of a material** may be defined as the increase in resistance per ohm original resistance per °C rise in temperature.

From Eq. (1.1), we can write

$$R_t = R_0\,(1 + \alpha_0 t) \tag{1.3}$$

1.5.2 Effect of Temperature on Temperature Coefficient

Suppose a conductor is heated from one initial temperature t_1°C to a final temperature t_2°C. Let R_1 and R_2 be the resistances of a material at t_1°C and t_2°C respectively and α_1 and α_2 be the corresponding temperature coefficients. Then,

$$R_2 = R_1[1 + \alpha_1(t_2 - t_1)] \tag{1.4}$$

From Eq. (1.3), we can write

$$R_2 = R_0(1 + \alpha_0 t_2) \text{ and } R_1 = R_0(1 + \alpha_0 t_1)$$

Therefore,

$$\frac{R_2}{R_1} = \frac{1 + \alpha_0 t_2}{1 + \alpha_0 t_1}$$

or

$$R_2 = R_1\left[\frac{1 + \alpha_0 t_2}{1 + \alpha_0 t_1}\right] \tag{1.5}$$

From Eqs (1.4) and (1.5),

$$R_1[1 + \alpha_1(t_2 - t_1)] = R_1\left[\frac{1+\alpha_0 t_2}{1+\alpha_0 t_1}\right]$$

or $$1 + \alpha_1(t_2 - t_1) = \frac{1+\alpha_0 t_2}{1+\alpha_0 t_1}$$

or $$\alpha_1(t_2 - t_1) = \frac{1+\alpha_0 t_2}{1+\alpha_0 t_1} - 1$$

$$= \frac{\alpha_0(t_2 - t_1)}{1+\alpha_0 t_1}$$

Hence, $\alpha_1 = \dfrac{\alpha_0}{1+\alpha_0 t_1}$

Similarly, $\alpha_2 = \dfrac{\alpha_0}{1+\alpha_0 t_2}$

Example 1.1 A copper coil has a resistance of 40 Ω at 0°C. Find the resistance of the coil at 50°C. Resistance temperature coefficient of copper is 0.0043/°C at 0°C.

Solution

Let α_0 be the temperature coefficient of the material at 0°C.

Now, $R_t = R_0(1 + \alpha_0 t)$

So, $R_{50} = 40(1 + 0.0043 \times 50)$

or $R_{50} = 48.6\ \Omega$

Example 1.2 The field winding of a generator has a resistance of 12.7 Ω at 18°C and 14.3 Ω at 50°C. Find temperature coefficients of the winding at 0°C and 18°C. Also find the resistance of the winding at 0°C.

Solution

Temperature coefficient at 0°C:

$$R_t = R_0(1 + \alpha_0 \times t)$$

$$R_{18} = R_0(1 + \alpha_0 \times 18) \quad \text{(i)}$$

$$R_{50} = R_0(1 + \alpha_0 \times 50) \quad \text{(ii)}$$

Dividing Eq. (i) by (ii),

$$\frac{R_{18}}{R_{50}} = \frac{1+\alpha_0 \times 18}{1+\alpha_0 \times 50}$$

or $$\frac{12.7}{14.3} = \frac{1+\alpha_0 \times 18}{1+\alpha_0 \times 50}$$

On solving, $\alpha_0 = \dfrac{1}{236}$/°C

Temperature coefficient at 18°C:

$$\alpha_{18} = \frac{\alpha_0}{1+\alpha_0 \times 18}$$

Dividing numerator and denominator by α_0, we get

$$\alpha_{18} = \frac{1}{\frac{1}{\alpha_0} + 18}$$

or $$\alpha_{18} = \frac{1}{236 + 18}$$

Hence, $\alpha_{18} = \dfrac{1}{254}$/°C

Resistance at 0°C:

$$R_{18} = R_0(1 + \alpha_0 \times 18)$$

So, $$R_0 = \frac{R_{18}}{(1+\alpha_0 \times 18)}$$

or $$R_0 = \frac{R_{18}}{\left(1 + \frac{1}{236} \times 18\right)}$$

$$= \frac{12.7}{\left(1 + \frac{1}{236} \times 18\right)}$$

Hence, $R_0 = 11.8\ \Omega$

Example 1.3 A certain length of aluminium wire has a resistance of 28.3 Ω at 20°C. What is its resistance at 60°C? The temperature coefficient of resistance of aluminium is 0.00403/°C at 20°C.

Solution

We have

$$R_{60} = R_{20}[1 + \alpha_{20}(t_2 - t_1)]$$

$$= 28.3[1 + 0.00403(60 - 20)]$$

$$= 32.86\ \Omega$$

Example 1.4 The shunt winding of a motor has a resistance of 80 Ω at 15°C. Find its resistance at 50°C. Resistance temperature coefficient of copper is 0.004/°C at 0°C.

Solution

We have

$$R_{15} = R_0(1 + \alpha_0 \times 15)$$

or $$R_0 = \frac{R_{15}}{1+\alpha_0 \times 15}$$

or $R_0 = \dfrac{80}{1+0.004\times 15}$

Hence, $R_0 = 75.47\ \Omega$

Now, $R_{50} = R_0(1 + \alpha_0 \times 50)$

or $R_{50} = 75.47(1 + 0.004 \times 50)$

Hence, $R_{50} = 90.56\ \Omega$

Example 1.5 The resistance of a coil of wire increases from 80 Ω at 10°C to 96.6 Ω at 60°C. Find the temperature coefficient of the material.

Solution

Let α_0 be the temperature coefficient of the material at 0°C.

$$R_{10} = R_0(1 + \alpha_0 10) = 80 \quad \text{(i)}$$

$$R_{60} = R_0(1 + \alpha_0 60) = 96.6 \quad \text{(ii)}$$

Dividing Eq. (i) by (ii),

$$\frac{80}{96.6} = \frac{1+\alpha_0 10}{1+\alpha_0 60}$$

or $80 + 4800\alpha_0 = 96.6 + 966\alpha_0$

or $3834\alpha_0 = 16.6$

Hence, $\alpha_0 = 4.33 \times 10^{-3}/°C$

Example 1.6 The field coil of a shunt motor has a resistance of 45 Ω at 20°C. Find the average temperature of winding at the end of the run when the resistance is increased to 48.5 Ω. Temperature coefficient of resistance is 0.004/°C at 0°C.

Solution

We know that

$$R_1 = R_0(1 + \alpha_0 t_1)$$

At $t_1 = 20°C$, $R_1 = 45\ \Omega$.

So, $45 = R_0(1 + 0.004 \times 20)$ (i)

Also, $R_2 = R_0(1 + \alpha_0 t_2)$

At t_2, $R_2 = 48.5\ \Omega$.

So, $48.5 = R_0(1 + 0.004 t_2)$ (ii)

Dividing Eq. (i) by (ii),

$$\frac{45}{48.5} = \frac{1+0.004\times 20}{1+0.004\, t_2}$$

On solving, $t_2 = 41°C$

Example 1.7 A coil has resistance of 18 Ω when its mean temperature is 20°C and of 20 Ω when its temperature is 50°C. Find its mean temperature rise when its resistance is 21 Ω and the surrounding temperature is 15°C.

Solution

We know that

$$R_t = R_0(1 + \alpha_0 t)$$

At $t_1 = 20°C$, $R_1 = 18\ \Omega$.

So, $18 = R_0(1 + \alpha_0 20)$ (i)

At $t_2 = 50°C$, $R_2 = 20\ \Omega$.

So, $20 = R_0(1 + \alpha_0 50)$ (ii)

Dividing Eq. (i) by (ii),

$$\frac{18}{20} = \frac{1+20\alpha_0}{1+50\alpha_0}$$

or $18 + 900\alpha_0 = 20 + 400\alpha_0$

or $500\alpha_0 = 2$

Hence, $\alpha_0 = 0.004°C$

If t°C is the temperature of the coil, when its resistance is 21 Ω, then

$$21 = R_0(1 + 0.004t) \quad \text{(iii)}$$

Dividing Eq. (iii) by (i),

$$\frac{21}{18} = \frac{1+0.004\,t}{1+0.004\times 20}$$

On solving, $t = 65°C$

Hence, rise in temperature = 65 – 15 = 50°C

1.6 Ohm's Law

The relationship between voltage (V), current (I) and resistance (R) in a dc circuit was first discovered by German scientist George Simon Ohm. This relationship is called Ohm's law and may be stated as under:

The ratio of the potential difference (V) between the ends of a conductor to the current (I) flowing between them is constant, provided the physical conditions (e.g., temperature) do not change, i.e.,

$$\frac{V}{I} = \text{constant} = R$$

where R is the resistance of the conductor between the two points considered.

For example, if the voltage between two points A and B is V volt and the current flowing between them is I ampere (Fig. 1.4), then V/I will be constant and equal to R, the resistance between the points A and B. If the voltage is doubled,

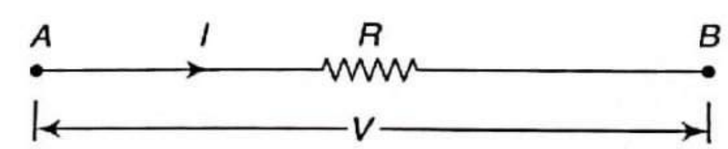

Fig. 1.4 Illustration of Ohm's law

the current will also double so that the ratio V/I remains constant. It may be noted here that if voltage is measured in volt and current in ampere, then resistance will be in ohm. The following points may be noted about Ohm's law:

(i) Ohm's law is true for dc circuits. However, it is not, in general, valid for ac circuits.

(ii) Strictly speaking, Ohm's law is true for metal conductors at constant temperature. If the temperature changes, Ohm's law is not applicable.

(iii) There are many conductors (e.g., silicon carbide) to which Ohm's law is not applicable even if the temperature is constant. It is because such materials have the property of changing their resistance as the current through them is changed.

(iv) Ohm's law can be expressed in three forms, viz.

$$I = V/R, \qquad V = IR, \qquad R = V/I$$

These formulae can be applied to any part of a dc circuit or to a complete circuit.

1.7 Electric Power

The rate at which work is done in an electric circuit is called **electric power**, i.e.,

$$\text{Electric power} = \frac{\text{Work done in electric circuit}}{\text{Time}}$$

When voltage is applied to a circuit, it causes current (i.e., free electrons) to flow through it. Clearly, work is being done in moving the electrons in the circuit. This work done in moving the electrons in unit time is called the electric power. Thus, referring to the part AB of the circuit (see Fig. 1.5),

V = Potential difference (PD) across AB in V
I = Current in A
R = Resistance of AB in Ω
t = Time in sec for which the current flows

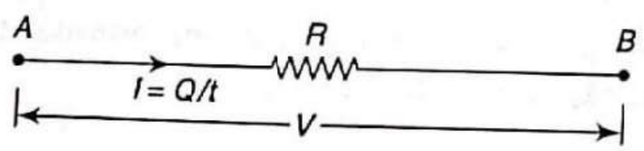

Fig. 1.5 Power dissipated in resistance

The total charge that flows in t second is $Q = I \times t$ coulomb and by definition (see Section 1.3),

$$V = \frac{\text{Work done}}{Q}$$

or $$\text{Work done} = VQ = VIt \qquad (\because Q = It)$$

So, Electric power, $$P = \frac{\text{Work done}}{t} = \frac{VIt}{t} = VI \text{ joule/sec or watt}$$

So, $$P = VI \qquad \text{(i)}$$

Using $V = IR$,

$$P = I^2R \qquad \text{(ii)}$$

Similarly, using $I = V/R$

$$P = \frac{V^2}{R} \qquad \text{(iii)}$$

The above three formulae are equally valid for calculation of electric power in a dc circuit. The formula to be used depends simply on the quantities known or most easily determined.

The basic unit of electric power is *joule/sec* or *watt* (W). The power consumed in a circuit is 1 watt if a PD of 1V causes 1A current to flow through the circuit. So,

Power in watt = Voltage in volt × Current in ampere

The bigger units of electric power are kilowatt (kW) and megawatt (MW).

1 kW = 1000 W
1 MW = 10^6 W or 10^3 kW

1.8 Electrical Energy

The total work done in an electric circuit is called **electrical energy**, i.e.,

$$\text{Electrical energy} = \text{Electrical power} \times \text{time} = VIt = I^2Rt = \frac{V^2}{R}t$$

The formulae for electrical energy can be readily derived by multiplying the electric power by 't', the time for which the current flows. The unit of electrical energy will depend upon the units of electric power and time as follows:

(i) If power is taken in watt and time in second, then the unit of electrical energy will be watt-sec, i.e.,
Energy in watt-sec = Power in watt × Time in sec

(ii) If power is expressed in watt and time in hour, then the unit of electrical energy will be watt-hour, i.e.,
Energy in watt-hour = Power in watt × Time in h

(iii) If power is expressed in kilowatt and time in hour, then the unit of electrical energy will be kilowatt-hour (kW-h), i.e.,
Energy in kW-h = Power in kW × Time in h

It may be pointed out here that in practice, electrical energy is measured in kilowatt-hour (kW-h). **One kilowatt-hour (kW-h)** of electrical energy is expended in a circuit if 1 kW (1000 W) of power is supplied for 1 h.

1.9 DC Circuit

The essential parts of an electric circuit are (i) the source of power (e.g., battery, generator), (ii) the conductors used to carry the current, and (iii) the load (e.g., lamps, heater, motor). The source supplies electrical energy to the load, which converts it into heat or other forms of energy. Thus, conversion of electrical energy into other forms of energy is possible only with the help of suitable circuits.

The closed path followed by a direct current (dc) is called a **dc circuit**. Figure 1.6 shows a torch bulb connected to a battery through conducting wires. The direct current starts from the positive terminal of the battery and comes back to the starting point via the load. The direct current follows the path *ABCDA*, and *ABCDA* is a dc circuit. The load for a dc circuit is usually a resistance. In a dc circuit, loads (i.e., resistances) may be connected in series, parallel, or series-parallel. Accordingly, dc circuits can be classified as:

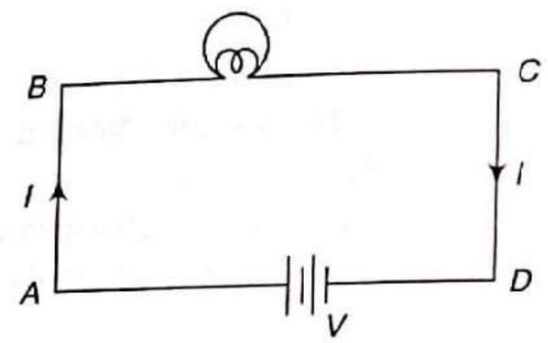

Fig. 1.6 A dc circuit

(i) Series circuits
(ii) Parallel circuits
(iii) Series-parallel circuits

1.9.1 Series Circuit

The circuit in which resistances are connected end to end so that there is only one path for the current to flow is called a **series circuit.**

Consider three resistances of R_1, R_2, and R_3 ohm connected in series across a battery of V volt as shown in Fig. 1.7(a). Obviously, there is only one path for the current I, i.e., current is same throughout the circuit.

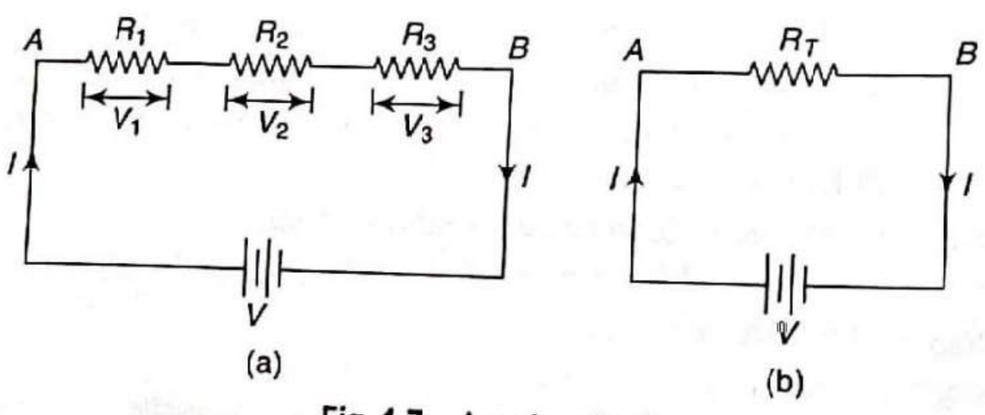

Fig. 1.7 A series circuit

By Ohm's law,

Voltage drop across the resistance R_1, $V_1 = I R_1$
Voltage drop across the resistance R_2, $V_2 = I R_2$
Voltage drop across the resistance R_3, $V_3 = I R_3$

Now, for a series circuit, sum of voltage drops is equal to the applied voltage. So,

$$V = V_1 + V_2 + V_3$$
$$= I R_1 + I R_2 + I R_3$$
$$= I(R_1 + R_2 + R_3)$$

or $$\frac{V}{I} = R_1 + R_2 + R_3$$

But V/I is the total resistance R_T between the points A and B [Fig. 1.7(b)]. R_T is called the total or equivalent resistance of the three resistances. So,

$$R_T = R_1 + R_2 + R_3$$

Hence, when a number of resistances are connected in series, the total resistance is equal to the sum of the individual resistances.

The following points may be noted about a series circuit:

(i) The current flowing through each resistance is same.
(ii) The applied voltage equals the sum of different voltage drops.
(iii) The total power consumed in the circuit is equal to the sum of the powers consumed by the individual resistances.
(iv) Every resistor of the circuit has its own voltage drop.

Voltage divider rule

It may be observed that the source voltage in the circuit shown in Fig. 1.7(a) divides among the resistors R_1, R_2, and R_3. The voltage drop across the resistances can be obtained as

$$V_1 = IR_1 = \frac{V}{R_T} R_1 \qquad \left(\because I = \frac{V}{R_T}\right)$$

Similarly, $$V_2 = IR_2 = \frac{V}{R_T} R_2$$

$$V_3 = IR_3 = \frac{V}{R_T} R_3$$

That is, the voltage drop across each resistor in a series circuit is directly proportional to the ratio of its resistance to the total series resistance of the circuit. By using the voltage divider rule, the proportion in which the voltage drops are distributed around a circuit can be determined.

1.9.2 Parallel Circuit

The circuit in which one end of each resistance is joined to a common point and the other end of each resistance is joined to another common point, so that there are as many paths for current flow as the number of resistances, is called a parallel circuit.

Consider three resistances of R_1, R_2, and R_3 ohm connected in parallel across a battery of V volt as shown in Fig. 1.8(a). The total current I divides into three parts: I_1 flowing through R_1, I_2 flowing through R_2 and I_3 flowing through R_3. Obviously, the voltage across each resistance is the same (i.e., V volt in this case) and there are as many current paths as the number of resistances.

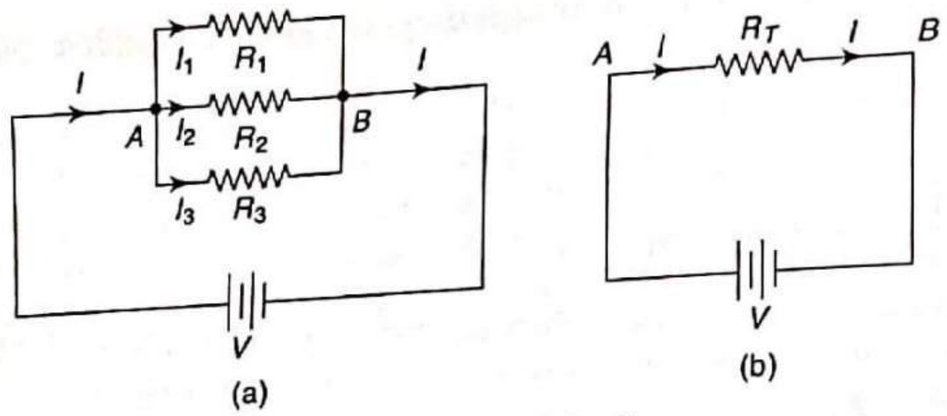

Fig. 1.8 A parallel circuit

By Ohm's law,

Current through the resistance R_1, $I_1 = \dfrac{V}{R_1}$

Current through the resistance R_2, $I_2 = \dfrac{V}{R_2}$

Current through the resistance R_3, $I_3 = \dfrac{V}{R_3}$

Now, for a parallel circuit, sum of the branch currents is equal to the total current.

So,

$$I = I_1 + I_2 + I_3$$

$$= \frac{V}{R_1} + \frac{V}{R_2} + \frac{V}{R_3}$$

$$= V\left(\frac{1}{R_1} + \frac{1}{R_2} + \frac{1}{R_3}\right)$$

or $$\frac{I}{V} = \frac{1}{R_1} + \frac{1}{R_2} + \frac{1}{R_3}$$

But V/I is the total resistance R_T of the parallel resistances [see Fig. 1.8(b)] so that $I/V = 1/R_T$.

Hence, $$\frac{1}{R_T} = \frac{1}{R_1} + \frac{1}{R_2} + \frac{1}{R_3}$$

Hence, when a number of resistances are connected in parallel, the reciprocal of the total resistance is equal to the sum of reciprocals of the individual resistances.

The following points may be noted about a parallel circuit:

(i) The voltage drop across each resistance is same.

(ii) The total current equals the sum of the branch currents.

(iii) The total power consumed in the circuit is equal to the sum of the powers consumed by the individual resistances.

(iv) Every resistor has its own current.

Current divider rule

Consider a parallel circuit of Fig. 1.9. Two resistances R_1 and R_2 connected in parallel across a battery of V volt. The total current I divides into two parts: I_1 flowing through R_1 and I_2 flowing through R_2.

The total resistance or equivalent resistance can be obtained as

$$\frac{1}{R_T} = \frac{1}{R_1} + \frac{1}{R_2}$$

$$= \frac{R_2 + R_1}{R_1 R_2}$$

So, $$R_T = \frac{R_1 R_2}{R_1 + R_2}$$

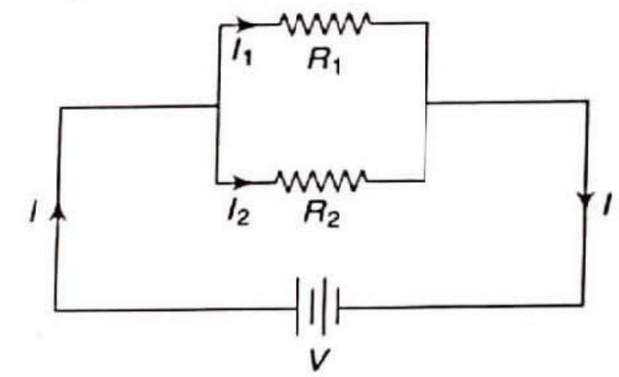

Fig. 1.9 Illustration of current divider rule

Hence, the total value of two resistances connected in parallel is equal to the product of the individual resistances divided by their sum.

The branch currents can be obtained as

$$R_T = \frac{R_1 R_2}{R_1 + R_2}$$

So, $$V = IR_T = I\frac{R_1 R_2}{R_1 + R_2}$$

Current through R_1,

$$I_1 = \frac{V}{R_1}$$

$$= \frac{I\dfrac{R_1 R_2}{R_1 + R_2}}{R_1} \qquad \left(\because V = I\frac{R_1 R_2}{R_1 + R_2}\right)$$

or $$I_1 = I\frac{R_2}{R_1 + R_2}$$

Current through R_2,

$$I_2 = \frac{V}{R_2}$$

or $$I_2 = I\frac{R_1}{R_1 + R_2} \qquad \left(\because V = I\frac{R_1 R_2}{R_1 + R_2}\right)$$

Hence, in a parallel circuit of two resistances, the current through one resistance is the line current (i.e., the total current) times the opposite resistance divided by the sum of the two resistances.

Example 1.8 Determine the current through and the voltages across three resistances, of ohmic values 5 Ω, 7 Ω, and 8 Ω, connected in series and across a 100 V source.

Solution

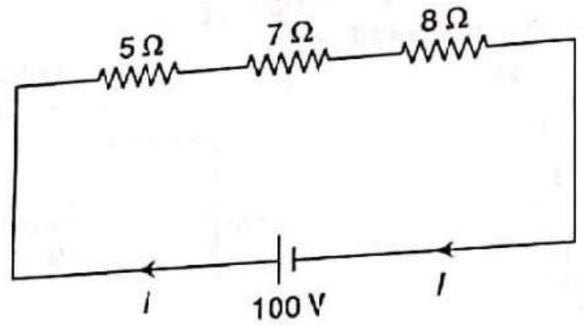

Fig. 1.10

Total resistance = $R_{eq} = 5 + 7 + 8 = 20\ \Omega$

Total circuit current = $I = \dfrac{V}{R_{eq}} = \dfrac{100}{20} = 5$ A

Voltage across the 5 Ω resistance = $5\,I = 25$ V
Voltage across the 7 Ω resistance = $7\,I = 35$ V
Voltage across the 8 Ω resistance = $8\,I = 40$ V

Example 1.9 Determine the currents through and the voltage across three resistances, of ohmic values 5 Ω, 10 Ω, and 20 Ω, all connected in parallel and across a 100 V source. Also find the current and the power drawn from the source.

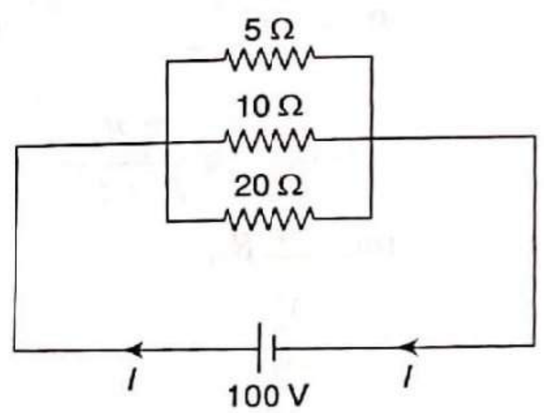

Fig. 1.11

Solution

Current through the 5 Ω resistance = $\dfrac{100}{5} = 20$ A

Current through the 10 Ω resistance = $\dfrac{100}{10} = 10$ A

Current through the 20 Ω resistance = $\dfrac{100}{20} = 5$A

Total current drawn from the source = 20 + 10 + 5 = 35 A
Power drawn from the source = $VI = 100 \times 35 = 3500$ W

Example 1.10 Four resistances, of ohmic values 5 Ω, 10 Ω, 15 Ω, and 20 Ω, are connected in series across a 100 V source. How is this voltage divided among the various resistors?

Solution

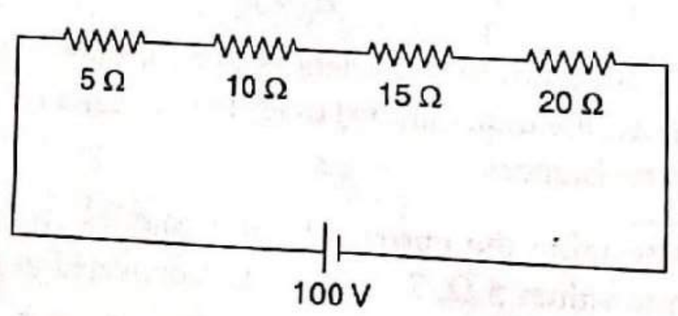

Fig. 1.12

Using the voltage division rule, we have

$$V_{5\,\Omega} = \left[\frac{5}{5+10+15+20}\right]100 = 10\text{ V}$$

$$V_{10\,\Omega} = \left[\frac{10}{5+10+15+20}\right]100 = 20\text{ V}$$

$$V_{15\,\Omega} = \left[\frac{15}{5+10+15+20}\right]100 = 30\text{ V}$$

$$V_{20\,\Omega} = \left[\frac{20}{5+10+15+20}\right]100 = 40\text{ V}$$

Example 1.11 Three resistances, of ohmic values 4 Ω, 12 Ω, and 6 Ω, are connected in parallel. If the total current is 12 A, how is this current divided among the various resistors?

Solution

Total or equivalent resistance,

$$\frac{1}{R_{eq}} = \frac{1}{4} + \frac{1}{12} + \frac{1}{6} = \frac{6}{12}$$

Hence $R_{eq} = \dfrac{12}{6} = 2\ \Omega$

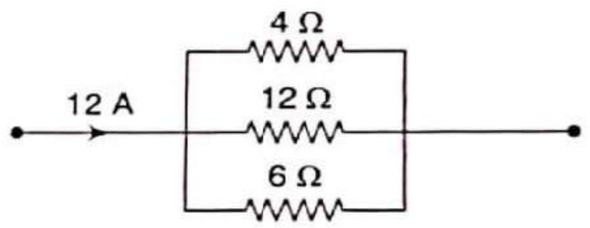

Fig. 1.13

PD across the parallel circuit = $IR_{eq} = 12 \times 2 = 24$ V

Current through 4 Ω resistance = $\dfrac{24}{4} = 6$ A

Current through 12 Ω resistance = $\dfrac{24}{12} = 2$ A

Current through 6 Ω resistance = $\dfrac{24}{6} = 4$ A

Example 1.12 Two resistors R_1 and R_2 are connected in parallel to a certain supply. The current taken from the supply is 5 A. Calculate the value of R_1 if $R_2 = 6\ \Omega$ and the current through R_1 is 2 A. Also find the total power absorbed by the circuit.

Solution

Figure 1.14 shows the circuit arrangement.
Current through $R_2 = I_2 = 5 - 2 = 3$ A
Supply voltage = $I_2R_2 = 3 \times 6 = 18$ V

So, $R_1 = \dfrac{V}{I_1} = \dfrac{18}{2} = 9\ \Omega$

Power absorbed by the circuit

$$= I_1^2 R_1 + I_2^2 R_2$$
$$= (2)^2 \times 9 + (3)^2 \times 6$$
$$= 36 + 54$$
$$= 90\text{ W}$$

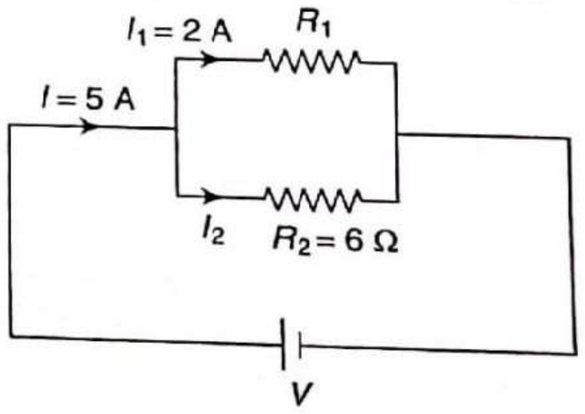

Fig. 1.14

Example 1.13 Calculate the effective resistance of the circuit of Fig. 1.15 and the current through 8 Ω resistance, when potential difference of 60 V is applied between the points *A* and *B*.

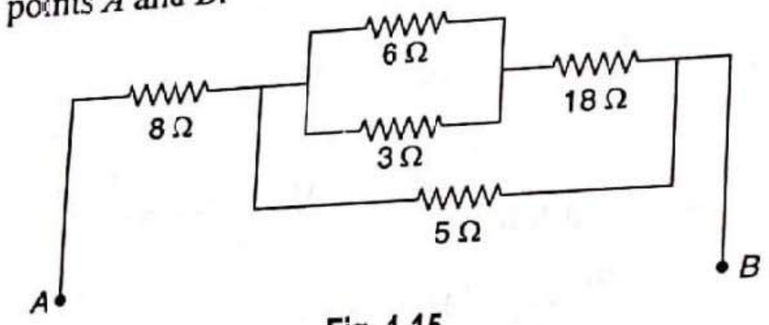

Fig. 1.15

Solution

Potential difference of 60 V is applied between the points *A* and *B*. Let the current delivered by the source is *I* A.

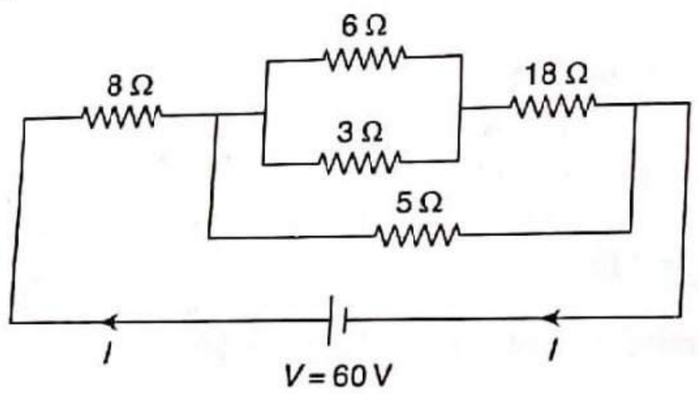

Fig. 1.16

In Fig. 1.16, the resistors 6 Ω and 3 Ω, are in parallel. ∴6 || 3 = 2 Ω.

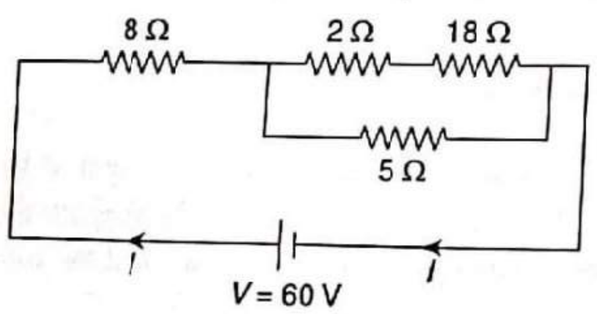

Fig. 1.17

In Fig. 1.17, resistors 2 Ω and 18 Ω are in series. ∴2 + 18 = 20 Ω.

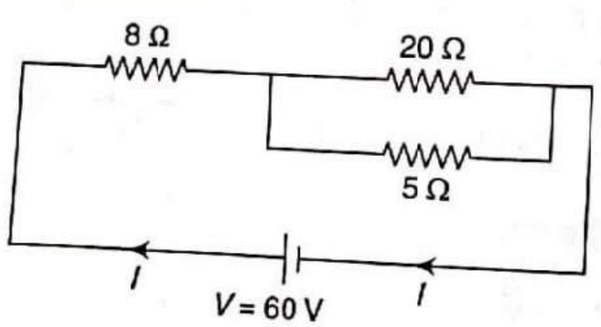

Fig. 1.18

In Fig. 1.18, resistors 20 Ω and 5 Ω are in parallel. ∴20 || 5 = 4 Ω

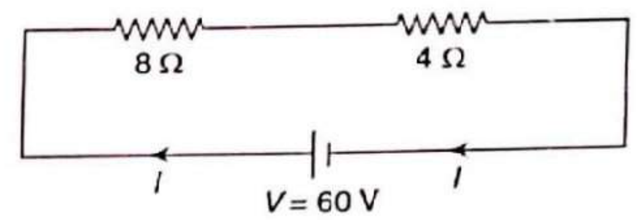

Fig. 1.19

In Fig. 1.19, resistors 8 Ω and 4 Ω are in series. ∴8 + 4 = 12 Ω

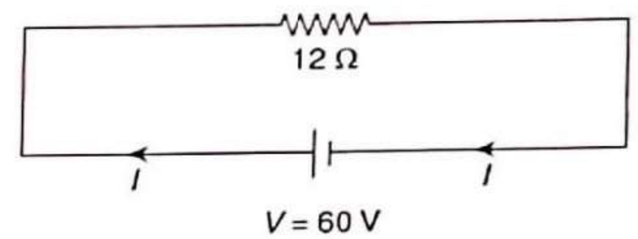

Fig. 1.20

By Ohm's law, circuit current, $I = \frac{60}{12} = 5$ A

Hence, current through 8 Ω resistor, $I_{8\,\Omega} = 5$ A (→)

Example 1.14 What is reading of the ammeter shown in the circuit of Fig. 1.21?

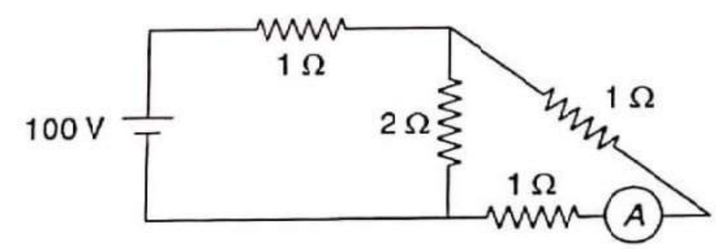

Fig. 1.21

Solution

Let the source current is *I* A.

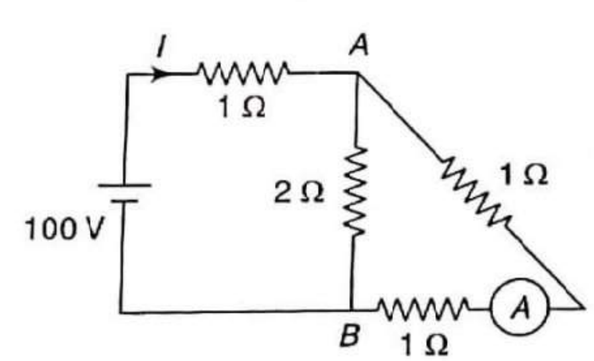

Fig. 1.22

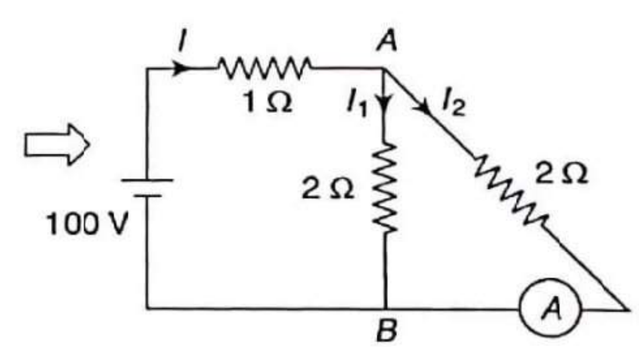

Fig. 1.23

The source current divides at node *A*. In Fig. 1.23, branch current I_2 flows through ammeter. For the calculation of branch current, source current is required. Equivalent resistance across the battery can be calculated as

$$R_{eq} = 1 + (2||2) = 2\ \Omega$$

By Ohm's law,

total current, $I = \frac{V}{R_{eq}} = \frac{100}{2} = 50$ A

By current division rule, $I_2 = 50 \times \frac{2}{2+2} = 25$ A

Hence, the ammeter reading is 25 A (the ammeter resistance is neglected).

Example 1.15 Calculate the effective resistance between the points A and B in the circuit shown in Fig. 1.24.

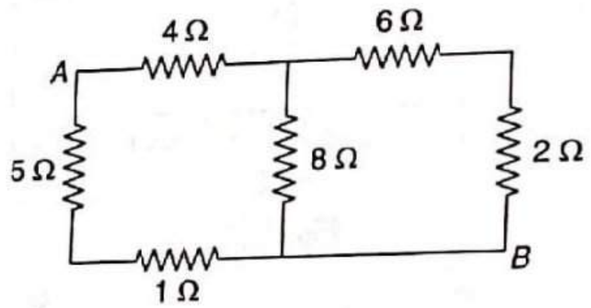

Fig. 1.24

Solution

Marking the different nodes, we get the following figure:

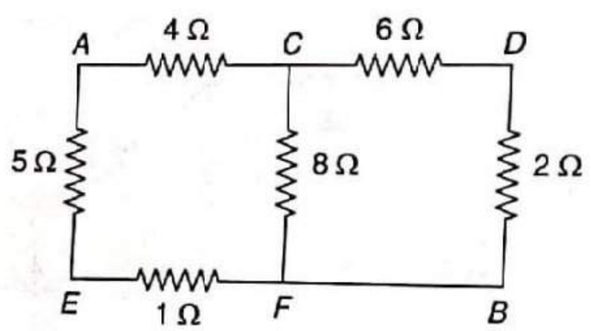

Fig. 1.25

In Fig. 1.25, resistors 5 Ω and 1 Ω are in series. Also resistors 6 Ω and 2 Ω are in series.

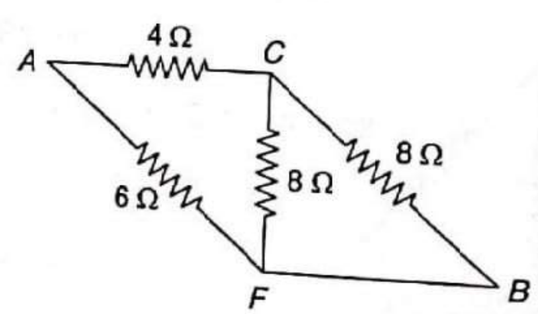

Fig. 1.26

It may be noted that series resistances can be clubbed (added) together and after adding the series resistances, common nodes vanish, i.e., in Fig. 1.25, node E and node D vanish. In Fig. 1.26, node F and node B are same and by joining them, we get the following figures:

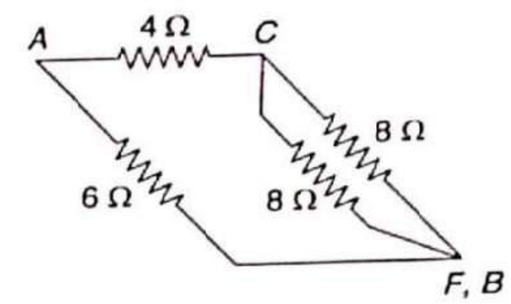

Fig. 1.27

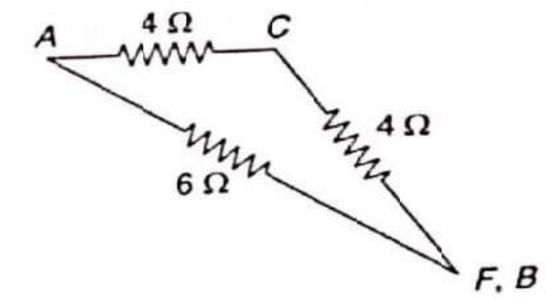

Fig. 1.28

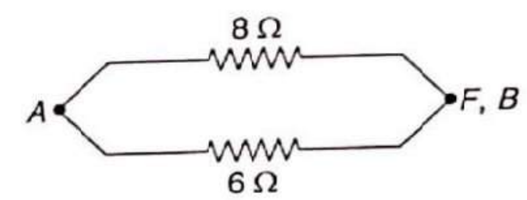

Fig. 1.29

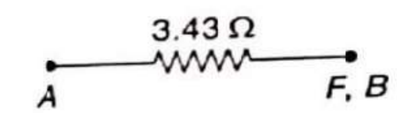

Fig. 1.30

Thus, the equivalent resistance between the terminals A and B, $R_{AB} = 3.43\ \Omega$.

Example 1.16 Calculate battery current and the effective resistance of the network of Fig. 1.31.

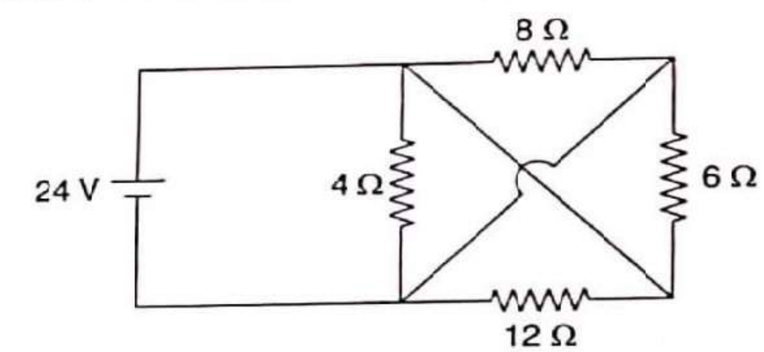

Fig. 1.31

Solution

By marking the different nodes and assuming the battery current I A, we get the circuit as shown in Fig. 1.32.

By taking the link CE from outside, the cross connection can be avoided. Thus, the circuit of Fig. 1.32 can be simplified as shown in Fig. 1.33.

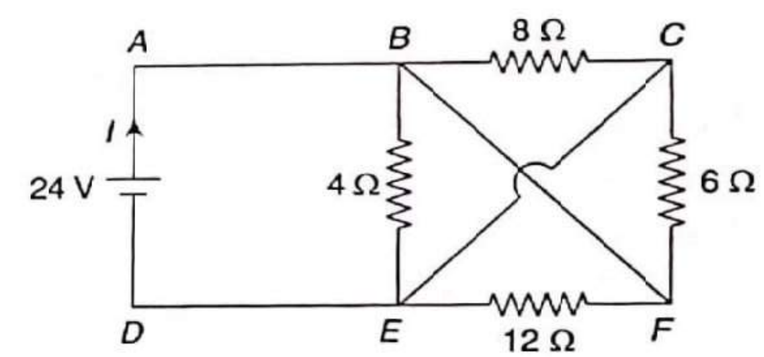

Fig. 1.32

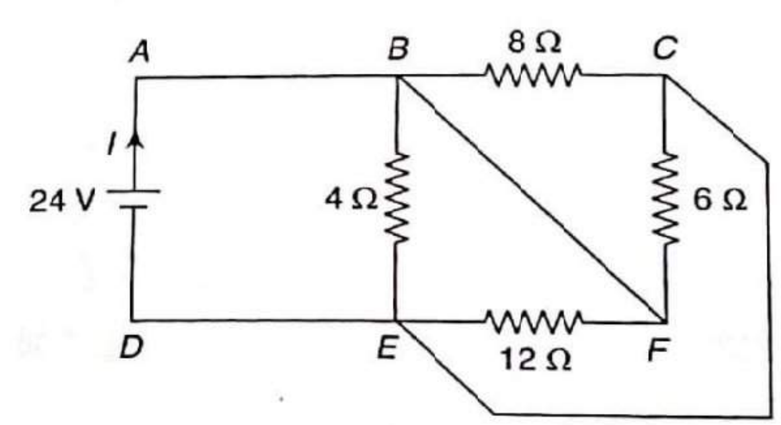

Fig. 1.33

In Fig. 1.33, node B and node F are same and by joining them, the circuit can be simplified as follows:

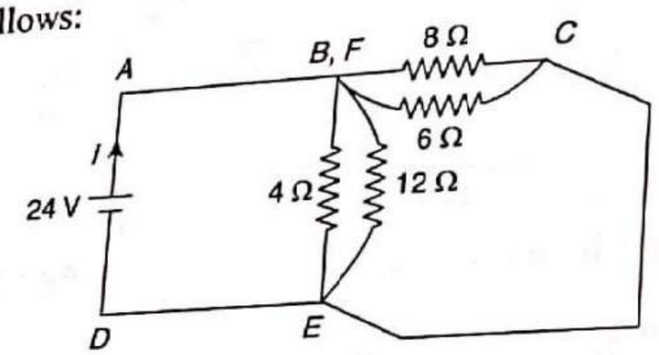

Fig. 1.34

In Fig. 1.34, resistors 6 Ω and 8 Ω are in parallel. Also resistors 4 Ω and 12 Ω are in parallel.

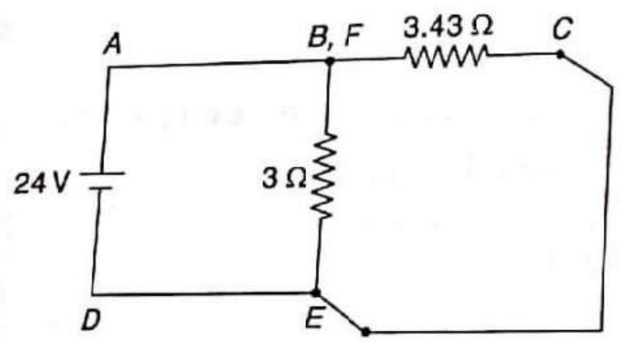

Fig. 1.35

In Fig. 1.35, resistors 3 Ω and 3.43 Ω are in parallel.

By Ohm's law, battery current, $I = \frac{24}{1.6} = 15\text{A}$.

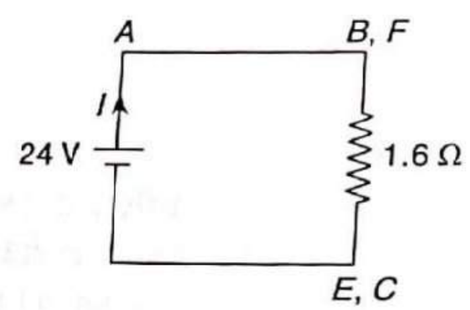

Fig. 1.36

Example 1.17 Calculate battery current of the network of Fig. 1.37.

Solution

By marking the different nodes and assuming the battery current I A, we get the circuit as shown in Fig. 1.38.

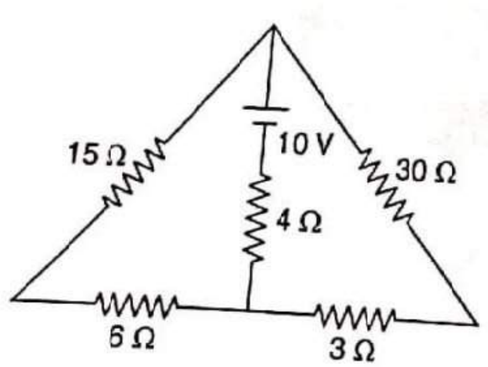

Fig. 1.37

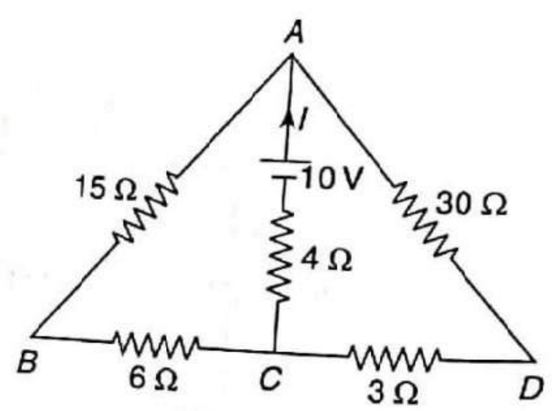

Fig. 1.38

Battery current can be calculated as $I = \frac{10}{R_{eq}}$. First we have to calculate R_{eq}.

In Fig. 1.38, resistors 6 Ω and 15 Ω are in series. Also resistors 30 Ω and 3 Ω are in series. In Fig. 1.39, resistors 21 Ω and 33 Ω are in parallel across the terminals A and C. In Fig. 1.40, 4 Ω and 12.83 Ω are in series. By Ohm's law, battery current

$$I = \frac{10}{16.83} = 0.59 \text{ A}$$

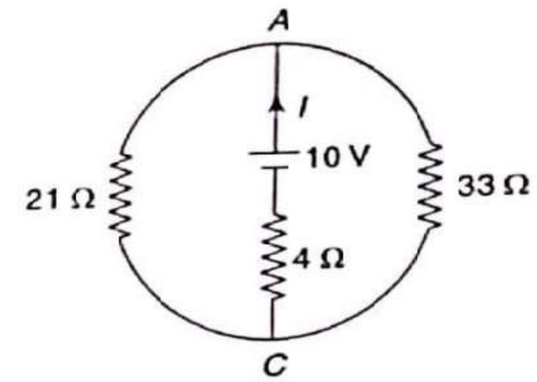

Fig. 1.39

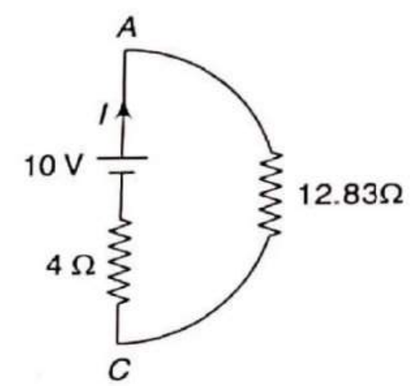

Fig. 1.40

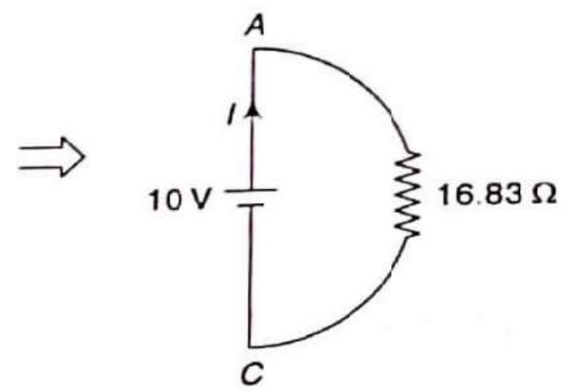

Fig. 1.41

Example 1.18 Calculate the effective resistance R_{AB} of network of Fig. 1.42.

Solution

In Fig. 1.42, node C and node E are same, and by joining them, the circuit of Fig. 1.42 can be simplified as shown in Fig. 1.43.

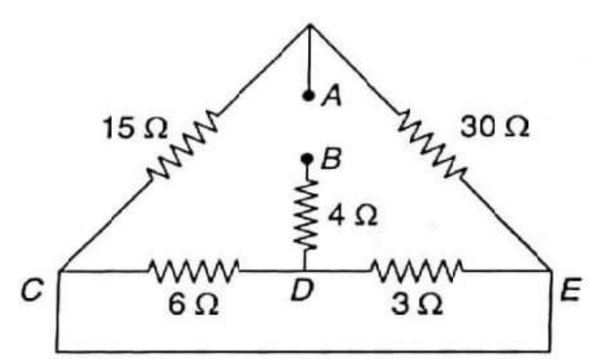

Fig. 1.42

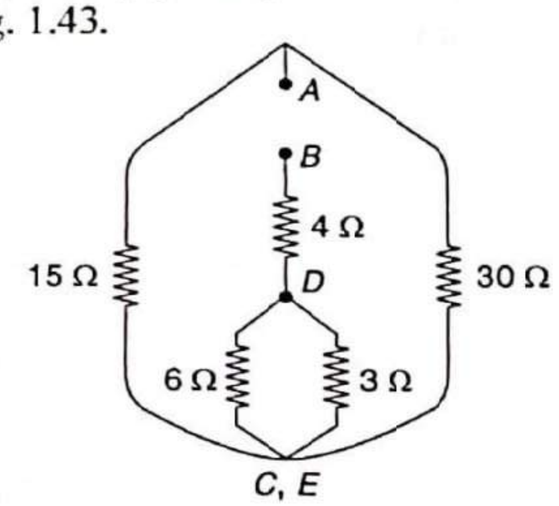

Fig. 1.43

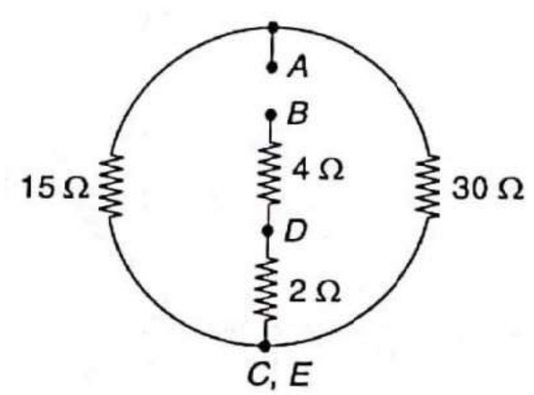

Fig. 1.44

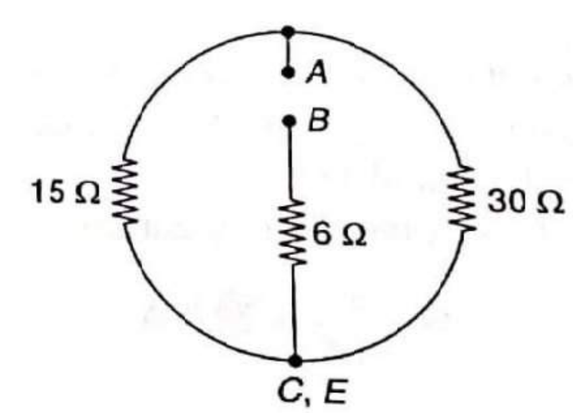

Fig. 1.45

In Fig. 1.43, resistors 6 Ω and 3 Ω are in parallel.
In Fig. 1.44, resistors 4 Ω and 2 Ω are in series.
In Fig. 1.45, resistors 15 Ω and 30 Ω are in parallel.

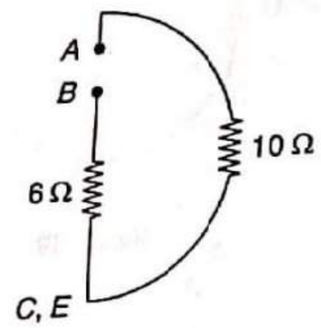

Fig. 1.46

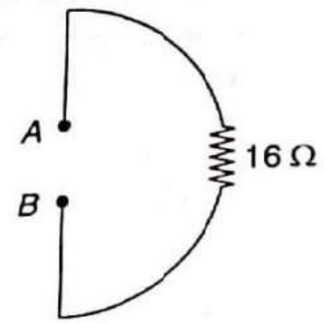

Fig. 1.47

Thus, the equivalent resistance between the terminals A and B, $R_{AB} = 16\ \Omega$.

Example 1.19 Calculate battery current of the network of Fig. 1.48.

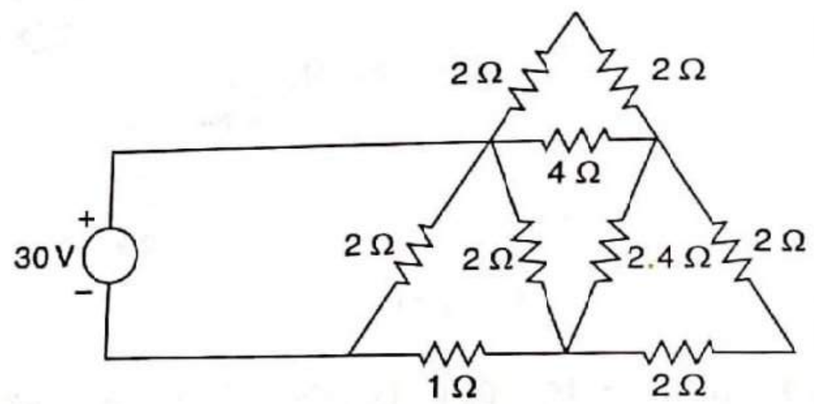

Fig. 1.48

Solution

Marking the different nodes and assuming the current delivered by the source as I A, we get the following figure:

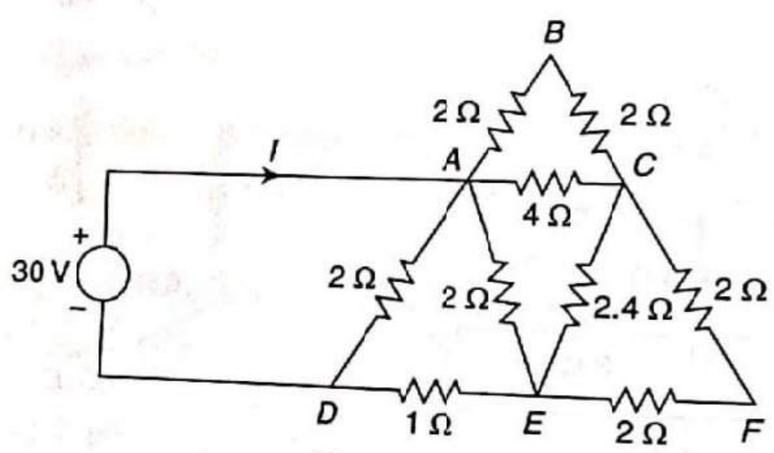

Fig. 1.49

By reducing the circuit across the battery, the equivalent resistance can be calculated.

By Ohm's law, battery current,

$$I = \frac{30}{1.06} = 28.3\ \text{A}$$

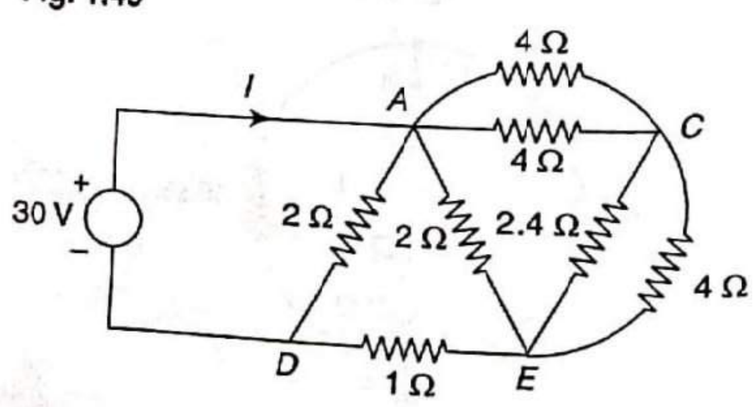

Fig. 1.50

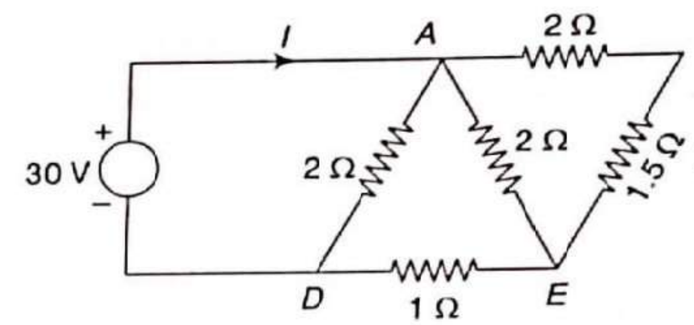

Fig. 1.51

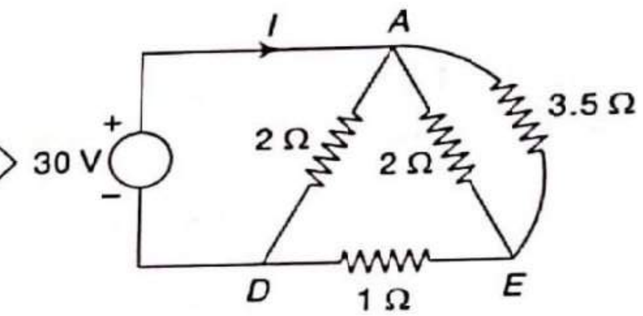

Fig. 1.52

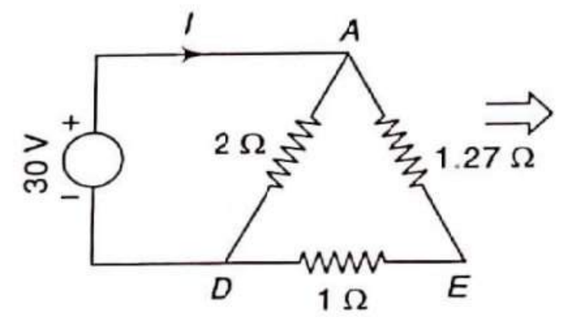

Fig. 1.53

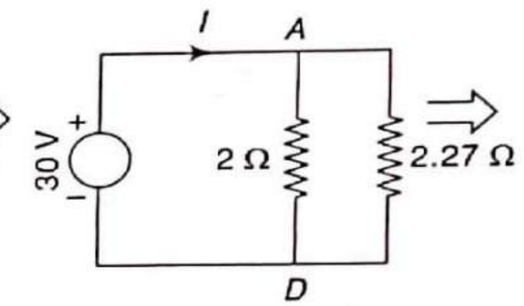

Fig. 1.54

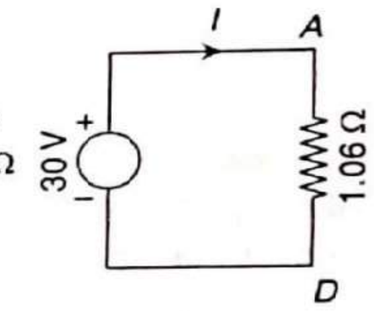

Fig. 1.55

Example 1.20 Calculate the effective resistance R_{AB} of the network shown in Fig. 1.56.

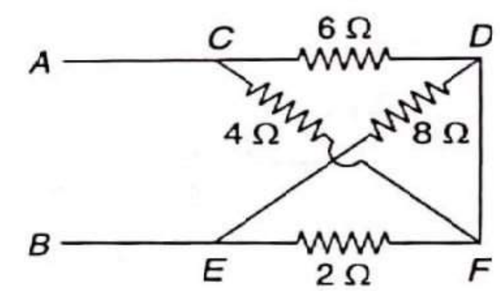

Fig. 1.56

Solution

In Fig. 1.56, by taking the 8 Ω resistor from outside, the cross connection can be avoided. Thus, the circuit of Fig. 1.56 can be simplified as shown in Fig. 1.57.

In Fig. 1.57, node D and node F are same and by joining them, the circuit of Fig. 1.57 can be further simplified as shown in Fig. 1.58.

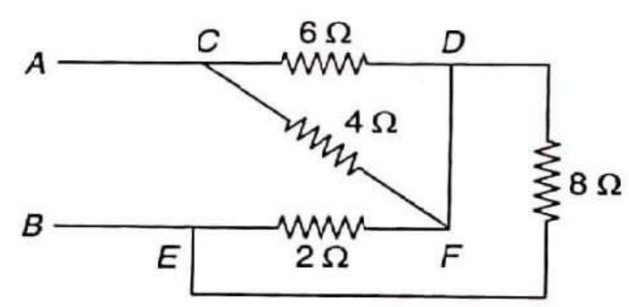

Fig. 1.57

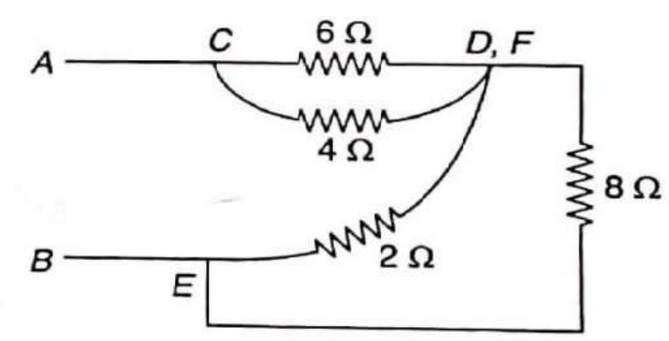

Fig. 1.58

In Fig. 1.58, resistors 6 Ω and 4 Ω are in parallel. Also resistors 2 Ω and 8 Ω are in parallel.

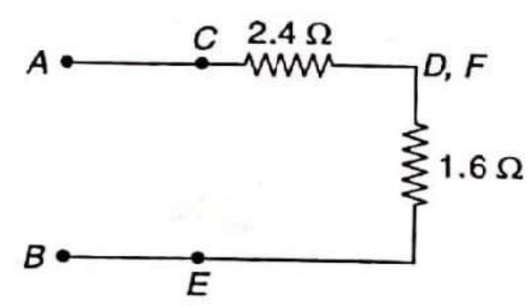

Fig. 1.59

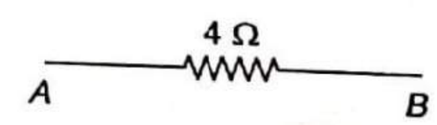

Fig. 1.60

Thus, equivalent resistance between the terminals A and B, $R_{AB} = 4\ \Omega$.

Example 1.21 Calculate the effective resistance R_{AB} of network shown in Fig. 1.61. (All resistances are in ohm.)

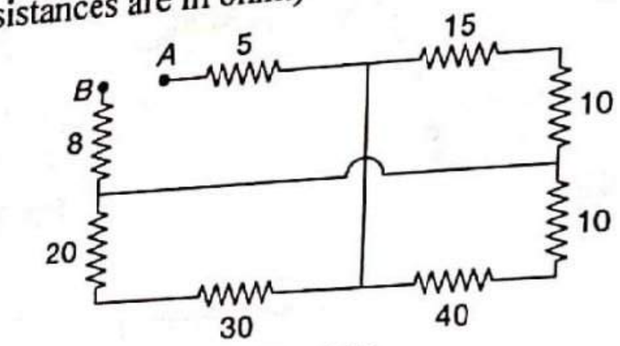

Fig. 1.61

Solution

Marking the different nodes in the circuit of Fig. 1.61, we get circuits as shown in Figs 1.62 and 1.63.

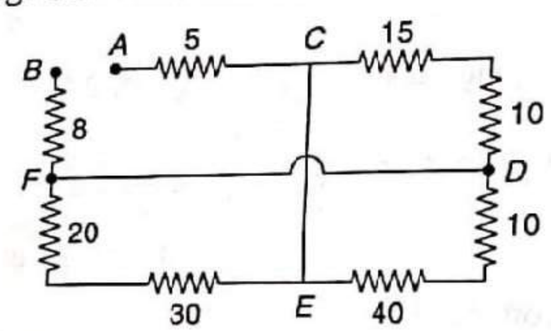

Fig. 1.62

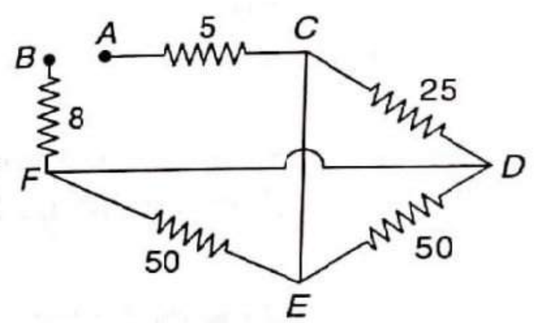

Fig. 1.63

In Fig. 1.63, by taking the link CE from outside, the cross connection can be avoided. Thus, the circuit of Fig. 1.63 can be simplified as shown below:

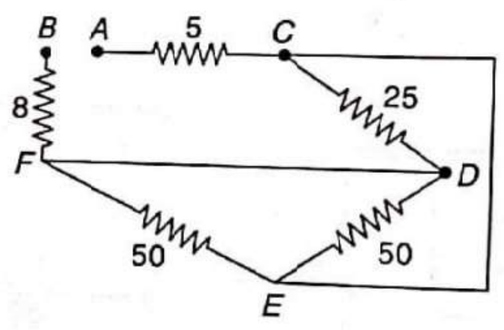

Fig. 1.64

In Fig. 1.64, node F and node D are same and by joining them, the circuit of Fig. 1.64 can be further simplified as shown below:

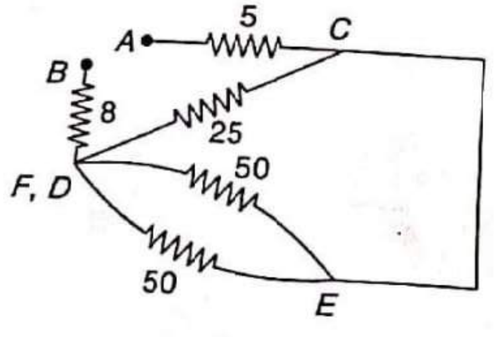

Fig. 1.65

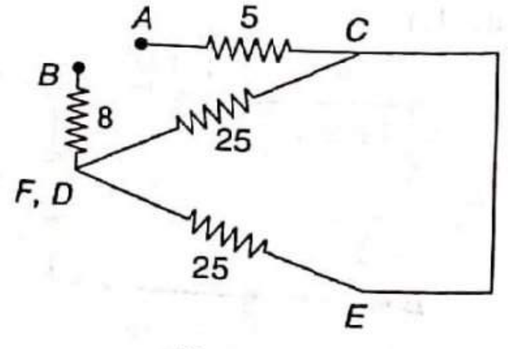

Fig. 1.66

In Fig. 1.66, node C and node E are same and by joining them, the circuit of Fig. 1.66 can be further simplified as shown in Figs 1.67, 1.68, and 1.69. Thus, the equivalent resistance between the terminals A and B, $R_{AB} = 25.5\ \Omega$.

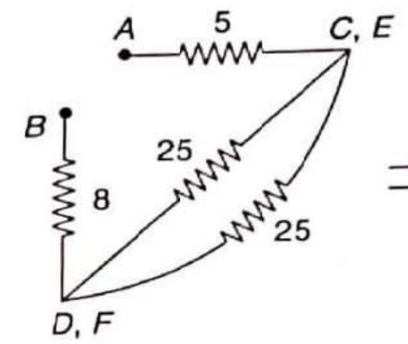

Fig. 1.67

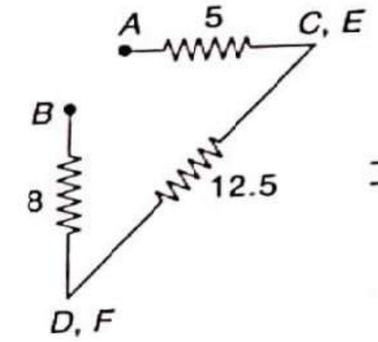

Fig. 1.68

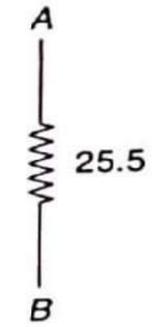

Fig. 1.69

Example 1.22 Find the current I through the lamp when the switch S is closed in the circuit shown in Fig. 1.70.

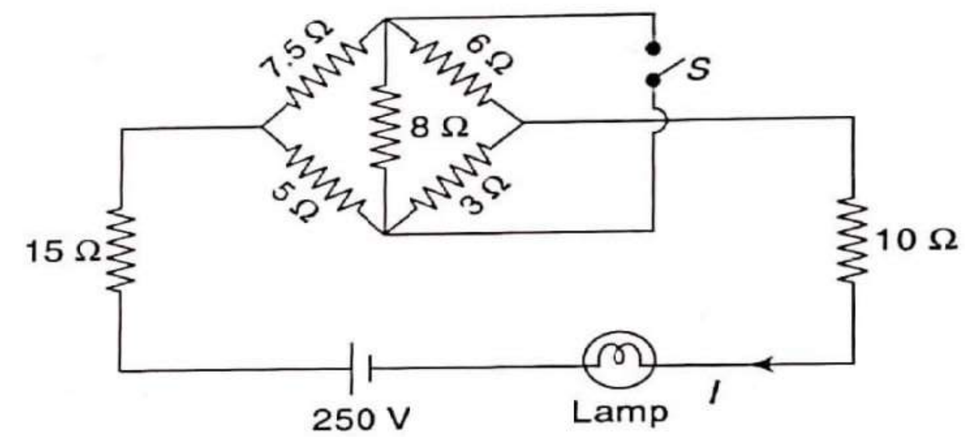

Fig. 1.70

Solution

Marking the different nodes in the circuit of Fig. 1.70, we get the circuit as shown in Fig. 1.71.

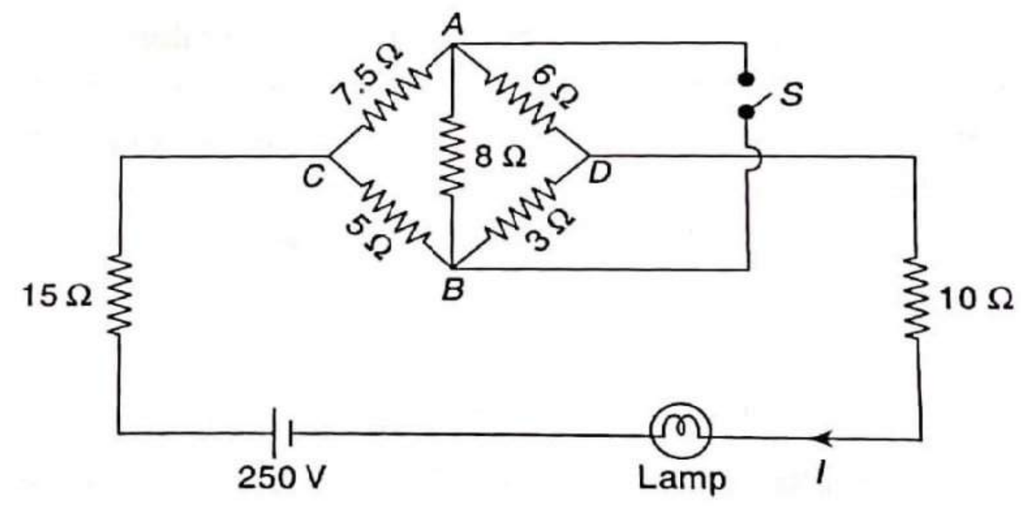

Fig. 1.71

After closing the switch S (refer Fig. 1.72), the resistor 8 Ω will be shorted and circuit gets modified as shown in Fig. 1.73.

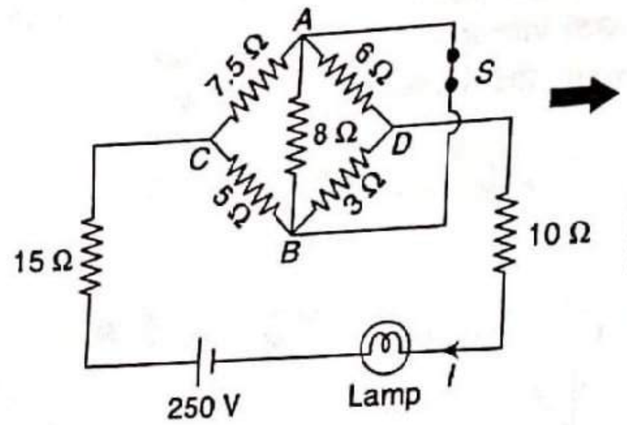

Fig. 1.72

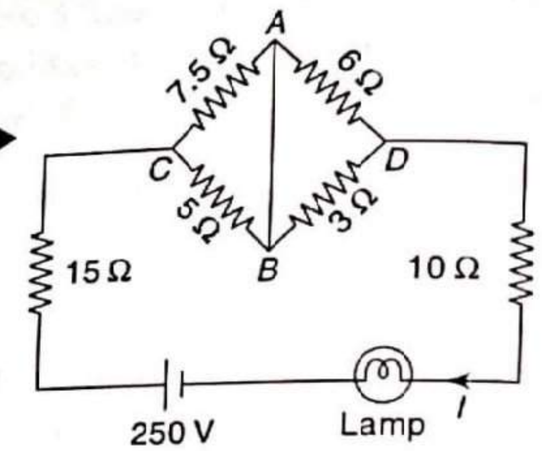

Fig. 1.73

In Fig. 1.73, nodes A and B are same and by joining them, the circuit of Fig. 1.73 can be further simplified as shown below:

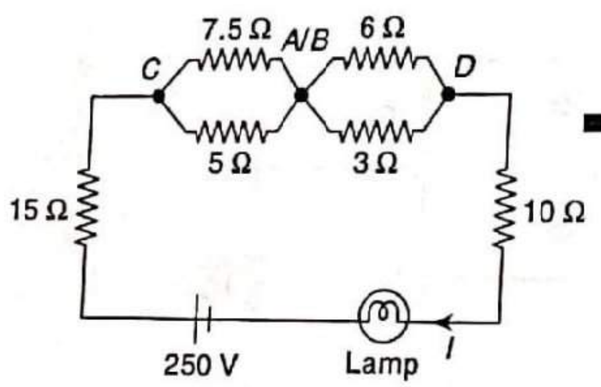

Fig. 1.74

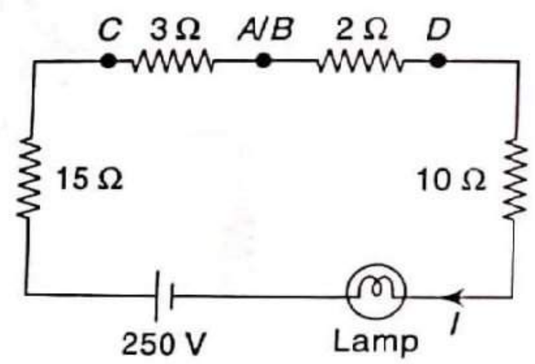

Fig. 1.75

From Fig. 1.75, current I through the lamp can be calculated as:

$$I = \frac{250}{15+3+2+10} = 8.33 \text{ A}$$

Example 1.23 An aluminum wire 10 m long and 2 mm in diameter is connected in parallel to a copper wire 6 m long. A total current of 2 A is passed through the combination and it is found that current through the aluminum wire is 1.25 A. Calculate the diameter of copper wire. Specific resistance of copper is 1.6×10^{-6} Ω-m and that of aluminum is 2.6×10^{-6} Ω-m.

Solution

Given : Let for aluminum wire:

R_1 = Resistance of aluminum wire

I_1 = Current through aluminum wire = 1.25 A

l_1 = Length of aluminum wire = 10 m

d_1 = Diameter of aluminum wire = 2 mm = 2×10^{-3} m

ρ_1 = Specific resistance of aluminum wire = 2.6×10^{-3} Ω-m

Let for copper wire:

R_2 = Resistance of copper wire

I_2 = Current through copper wire

l_2 = Length of copper wire = 6 m

d_2 = Diameter of copper wire

ρ_2 = Specific resistance of copper wire = 1.6×10^{-6} Ω-m

The conditions in the example are shown in Fig. 1.76. Let the voltage across R_1 and R_2 is equal to V volts.

Cross sectional area of aluminum wire,

$$a_1 = \pi \times \left(\frac{d_1}{2}\right)^2 = 3.14 \times \left(\frac{2 \times 10^{-3}}{2}\right)^2 = 3.14 \times 10^{-6} \text{ m}^2$$

$$R_1 = \rho_1 \times \frac{l_1}{a_1} = 2.6 \times 10^{-6} \times \frac{10}{3.14 \times 10^{-6}} = 8.28 \ \Omega$$

$$\therefore \quad V = I_1 \times R_1 = 1.25 \times 8.28 = 10.35 \text{ V}$$

By Ohm's law,

$$R_2 = \frac{V}{I_2} = \frac{10.35}{(I - I_1)} = \frac{10.35}{(2-1.25)} = 13.8 \ \Omega$$

But $\quad R_2 = \rho_2 \times \dfrac{l_2}{a_2}$

$$\therefore \quad 13.8 = 1.6 \times 10^{-6} \times \frac{6}{a_2}$$

$$\therefore \quad a_2 = 6.96 \times 10^{-7} \text{ m}^2$$

But $\quad a_2 = \pi \times \left(\dfrac{d_2}{2}\right)^2$

$$\therefore \quad 6.96 \times 10^{-7} = 3.14 \times \left(\frac{d_2}{2}\right)^2$$

$$\therefore \quad d_2 = 9.42 \times 10^{-4} \text{ m}$$

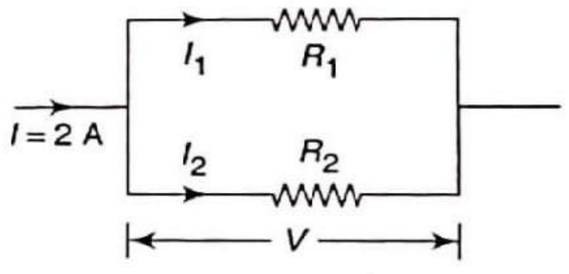

Fig. 1.76

Example 1.24 A resistance of 10 Ω is connected in series with two resistances each of 15 Ω arranged in parallel. What resistance must be shunted across the parallel combination so that the total current taken shall be 1.5 A with 20 V applied.

Solution

The circuit connections are shown in Fig. 1.77.

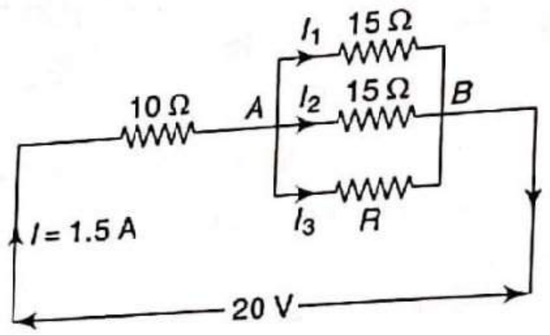

Fig. 1.77

Voltage drop across 10 Ω resistor = 1.5 × 10 = 15 V

Voltage drop across parallel combination, $V_{AB} = 20 - 15 = 5$ V

Voltage across each parallel resistor is 5 V.

Hence, $I_1 = \frac{5}{15} = \frac{1}{3}$ A and $I_2 = \frac{5}{15} = \frac{1}{3}$ A

Now, $I_3 = I - (I_1 + I_2)$

So, $I_3 = 1.5 - \left(\frac{1}{3} + \frac{1}{3}\right) = \frac{5}{6}$ A

Now, $I_3 R = 5$

So, $\left(\frac{5}{6}\right) R = 5$

Hence, $R = 6\ \Omega$

Example 1.25 In the circuit shown below, find the value of resistance R, when power consumed by the 12 Ω resistor is 36 W.

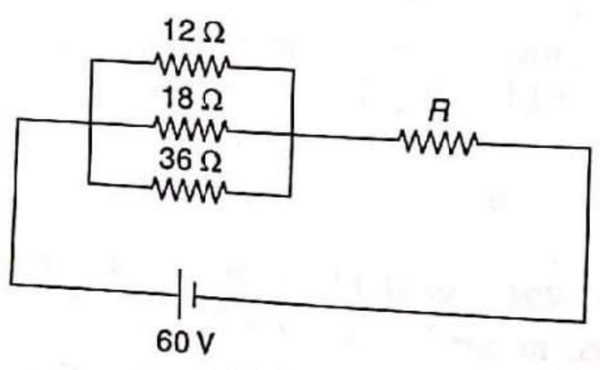

Fig. 1.78

Solution

The circuit connections are shown in Fig. 1.79.

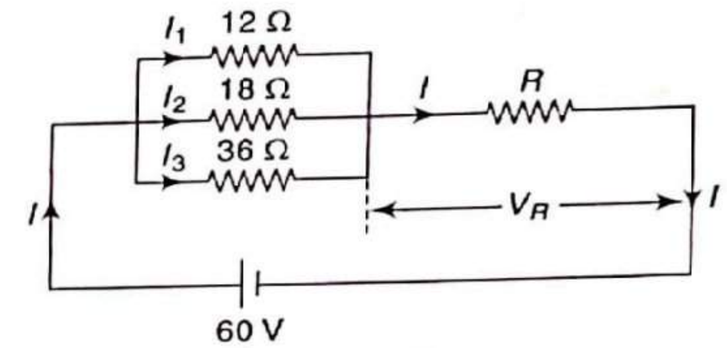

Fig. 1.79

Power in 12 Ω resistor = $I_1^2 \times 12 = 36$ ∴ $I_1 = 1.732$ A

Hence, voltage across 12 Ω resistor = 1.732 × 12 = 20.784 V

and voltage across R, $V_R = 60 - 20.784 = 39.216$ V

Hence, $I_2 = 20.784/18 = 1.155$ A

and $I_3 = 20.784/36 = 0.577$ A

Then $I = I_1 + I_2 + I_3 = 1.732 + 1.155 + 0.577 = 3.464$ A

Hence, value of unknown resistance, $R = V_R/I = 39.216/3.464 = 11.321\ \Omega$

Example 1.26 Find (i) current in 15 Ω resistor, (ii) voltage across 18 Ω resistor, and (iii) power dissipated in 7 Ω resistor of the circuit given in Fig. 1.80.

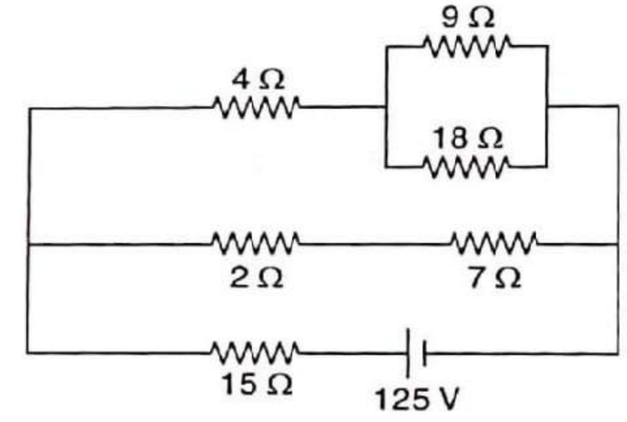

Fig. 1.80

Solution

Assuming the different currents, we get the following circuits:

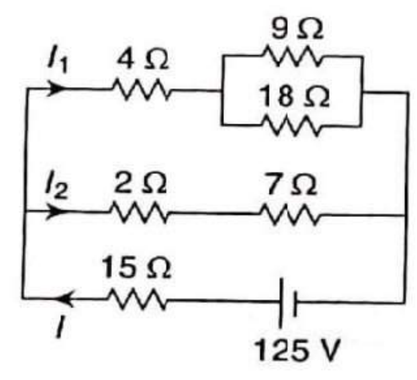

Fig. 1.81

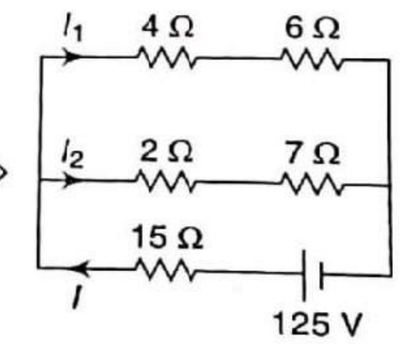

Fig. 1.82

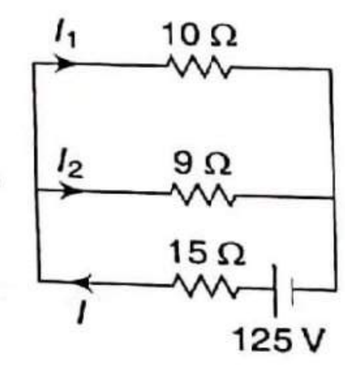

Fig. 1.83

Equivalent resistance across the battery, $R_{eq} = 15 + (10 \parallel 9) = 19.736\ \Omega$

(i) Current in 15 Ω resistor, $I = \dfrac{V}{R_{eq}} = \dfrac{125}{19.736} = 6.33$ A

(ii) Applying the current rule to circuit of Fig. 1.83, branch current I_1 can be calculated as

$$I_1 = I\frac{9}{9+10} = \frac{6.33 \times 9}{19} = 3 \text{ A}$$

Hence, current in 18 Ω resistor $= \dfrac{I_1 \times 9}{9+18} = \dfrac{3 \times 9}{27} = 1$ A

and voltage across 18 Ω resistor = 18 × 1 = 18 V

(iii) Current in 7 Ω resistor, $I_2 = I - I_1 = 6.33 - 3 = 3.33$ A

Hence, power dissipated in 7 Ω resistor $= I_2^2 \times 7 = (3.33)^2 \times 7 = 77.6$ W

Example 1.27 In the circuit shown below, find the value of resistance R.

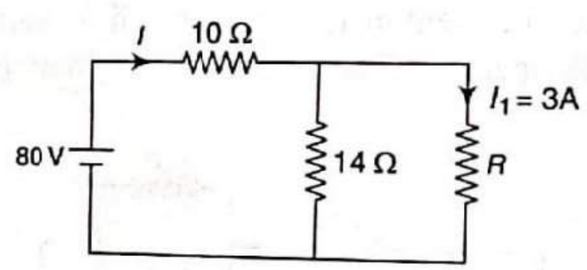

Fig. 1.84

Solution

Total circuit current, $I = \dfrac{80}{10 + (14 \parallel R)} = \dfrac{80}{10 + \dfrac{14R}{14+R}} = \dfrac{80(14+R)}{140+24R}$ (i)

By current division rule, I_1 can be calculated as

$$I_1 = I\frac{14}{14+R}$$

or $3 = I\dfrac{14}{14+R}$ $(\because I_1 = 3)$

Hence, $I = \dfrac{3(14+R)}{14}$ (ii)

From (i) and (ii), we get $R = 9.722\ \Omega$

1.10 Types of Sources

There are two types of sources: (i) ideal voltage source and (ii) ideal current source.

1.10.1 Ideal Voltage Source

It is that voltage source whose output voltage remains absolutely constant whatever the change in load current. It has zero internal resistance. In practice, ideal voltage source is not available, and every voltage source has some internal resistance. Smaller the resistance of a voltage source, more it will approach to the ideal voltage source. The ideal voltage source can be represented by either of the symbols shown in Fig. 1.85.

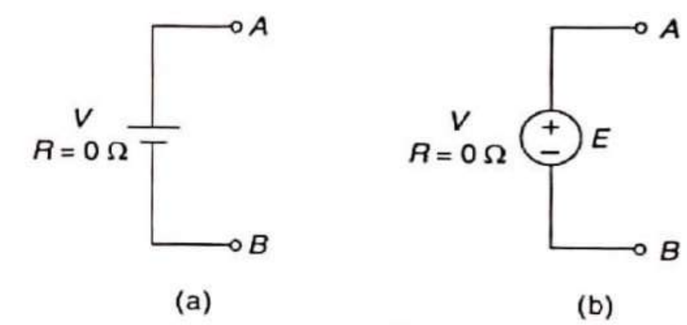

Fig. 1.85 Voltage source symbol

1.10.2 Ideal Current Source

It is that current source whose output current remains absolutely constant whatever the change in load resistance. Its internal resistance is infinity. At any load resistance, it supplies the constant current. In practice, ideal current source has very high resistance. Higher the resistance of a current source, more it will approach to the ideal source. The ideal current source can be represented by the symbol shown in Fig. 1.86.

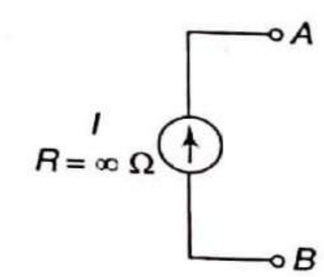

Fig. 1.86 Current source symbol

1.11 Source Transformation

The following points may be noted about a source transformation:

Case (i) A voltage source with a series resistance can be converted into (or replaced by) an equivalent current source with parallel resistance (Fig. 1.87).

Example It may be noted that if the polarity of a voltage source changes, accordingly the direction of the equivalent current source also changes (Fig. 1.88).

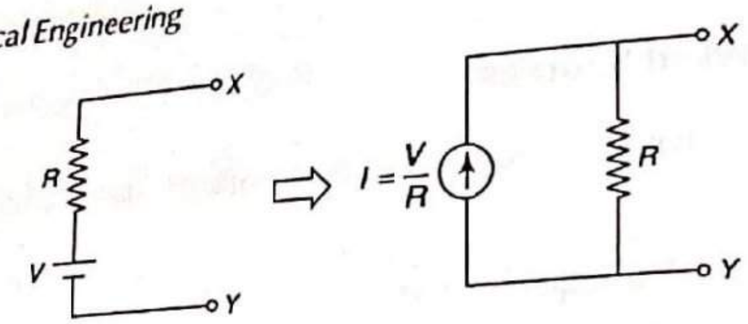

Fig. 1.87 Source transformation (voltage source to current source)

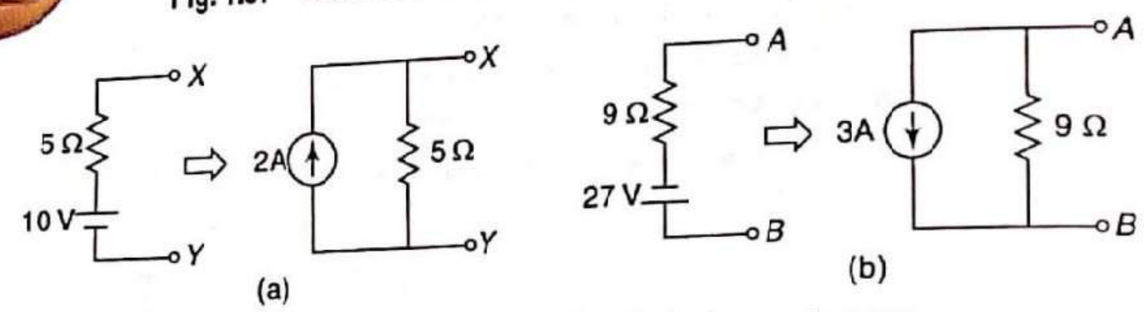

Fig. 1.88 Direction of equivalent current source

Case (ii) A current source with a parallel resistance can be converted into (or replaced by) an equivalent voltage source with series resistance as shown below:

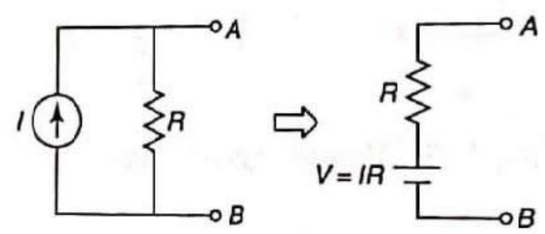

Fig. 1.89 Source transformation (current source to voltage source)

Example It may be noted that if the direction of a current source changes, accordingly the polarity of the equivalent voltage source also changes (Fig. 1.90).

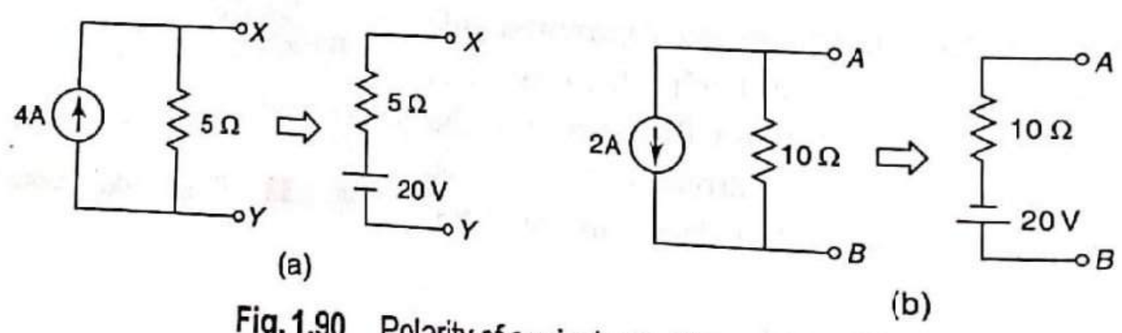

Fig. 1.90 Polarity of equivalent voltage source

Case (iii) Series voltage sources can be added.

Example In Fig. 1.91, voltage sources are connected in series with additive polarity. Resultant voltage source can be calculated directly by adding them and polarity of the resulted voltage source will be same as the given voltage sources.

Example In Fig. 1.92, voltage sources are connected in series with subtractive polarity. Resultant voltage source can be calculated by subtracting them (large

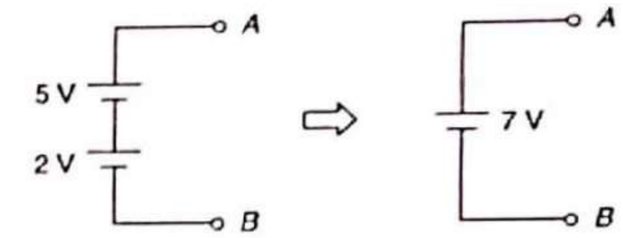

Fig. 1.91 Series voltage sources (aiding)

voltage source – small voltage source) and polarity of the resultant voltage source will be same as large voltage source.

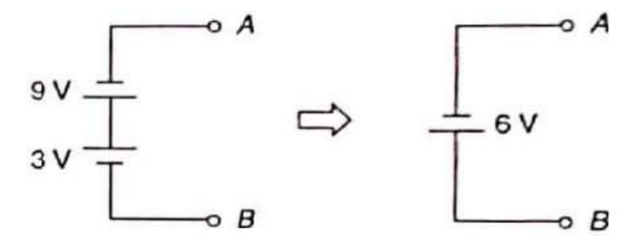

Fig. 1.92 Series voltage sources (opposing)

Case (iv) Parallel current sources can be added.

Example Current sources connected in parallel can be added or clubbed together. While clubbing the current sources, note their directions.

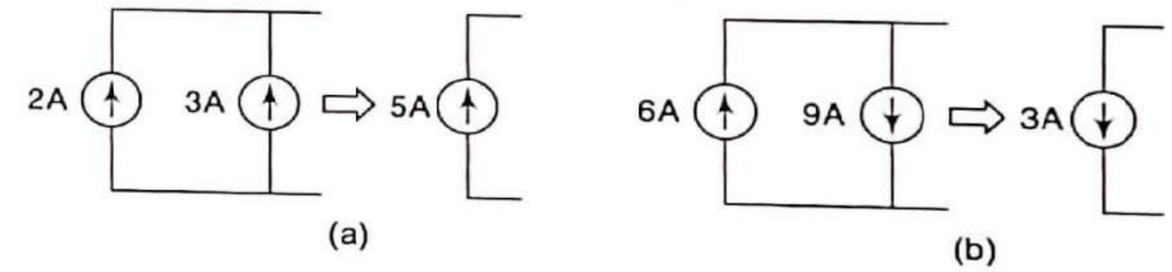

Fig. 1.93 Parallel current sources

Example 1.28 By source transformation, find current in 4 Ω resistor in a circuit of Fig. 1.94.

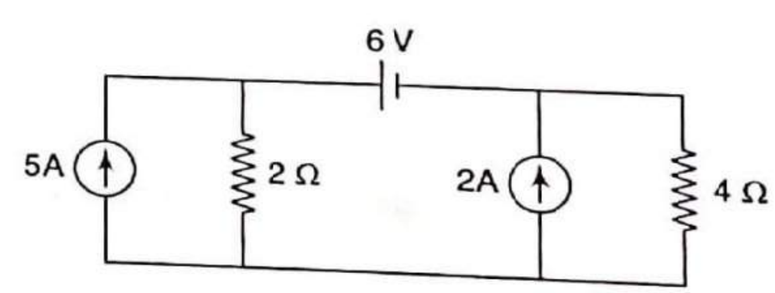

Fig. 1.94

Solution

Converting parallel combination of current source of 5 A and resistor of 2 Ω into equivalent series combination of voltage source and resistor, we get the following circuit:

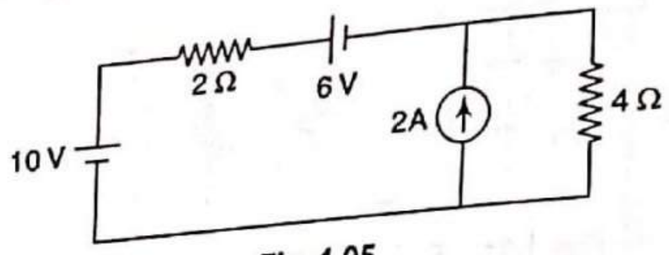

Fig. 1.95

By adding the series voltage sources, we get the circuit as shown below:

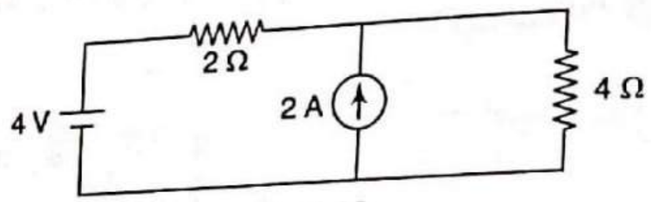

Fig. 1.96

Converting series combination of voltage source of 4 V and resistor of 2 Ω into equivalent parallel combination of current source and resistor, we get the following circuit:

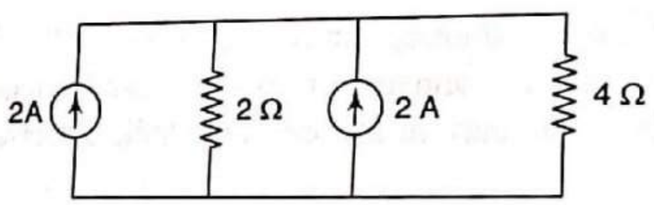

Fig. 1.97

By adding the parallel current sources, we get the following circuit:

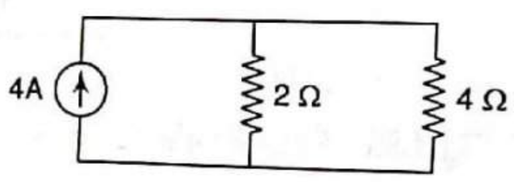

Fig. 1.98

By current division rule, we get

$$I_{4\Omega} = 4\frac{2}{2+4}$$

$$= 1.33 \text{ A } (\downarrow)$$

Example 1.29 By source transformation, find current in 3 Ω resistor in a circuit of Fig. 1.99.

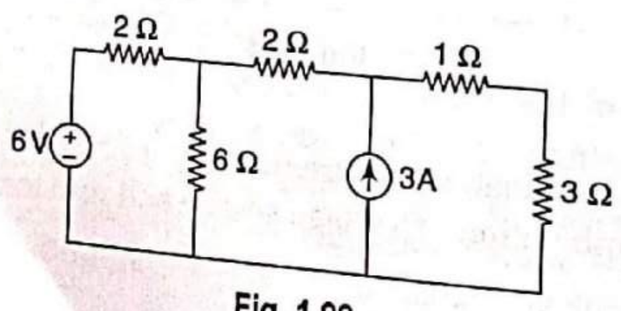

Fig. 1.99

Solution

Converting series combination of voltage source of 6 V and resistor of 2 Ω into equivalent parallel combination of current source and resistor.

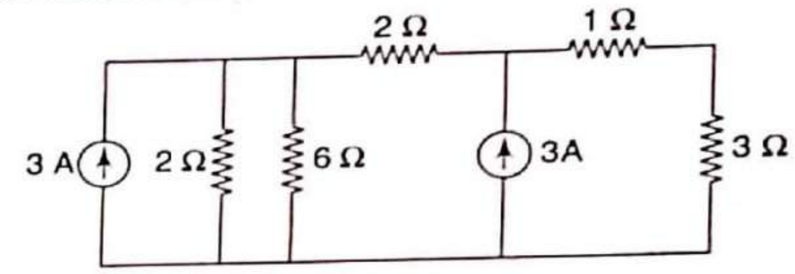

Fig. 1.100

In Fig. 1.100, resistors 6 Ω and 2 Ω are in parallel. Combining them, we get the following circuit:

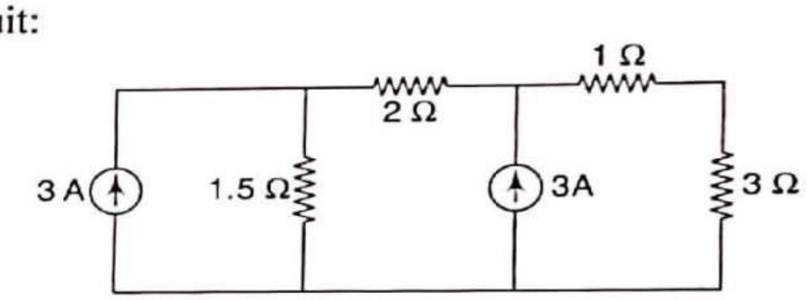

Fig. 1.101

Converting parallel combination of current source of 3 A and resistor of 1.5 Ω into equivalent series combination of voltage source and resistor, we get Fig. 1.102:

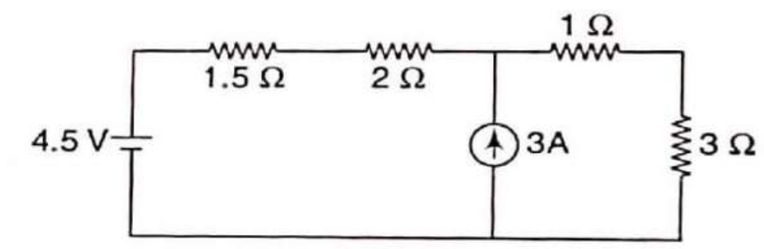

Fig. 1.102

In Fig. 1.102, resistors 1.5 Ω and 2 Ω are in series.

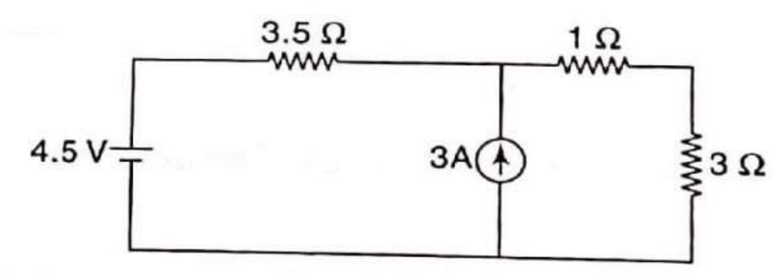

Fig. 1.103

Converting series combination of voltage source of 4.5 V and resistor of 3.5 Ω into equivalent parallel combination of current source and resistor, we get the circuit as shown in Fig. 1.104.

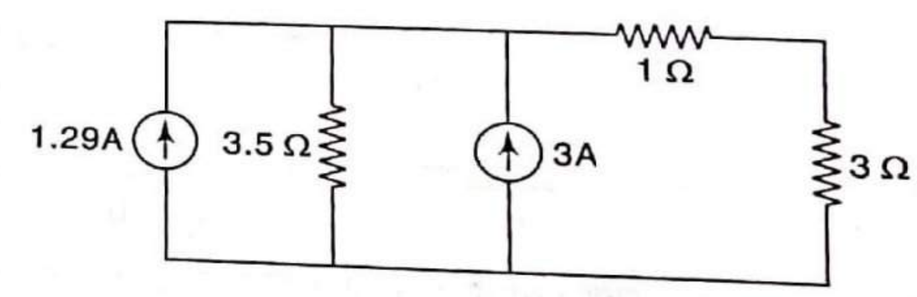

Fig. 1.104

By adding the parallel current sources, we get the circuit as shown in Fig. 1.105. By current division rule, we obtain

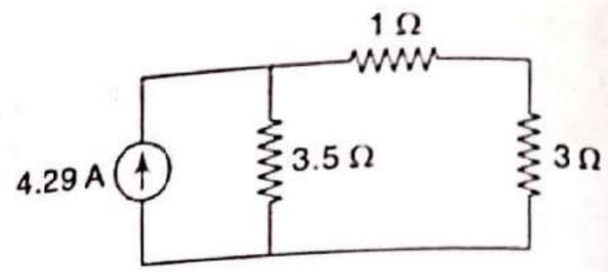

Fig. 1.105

$$I_{3\Omega} = 4.29\frac{3.5}{3.5+1+3}$$

$$= 2\text{ A }(\downarrow)$$

Example 1.30 By source transformation, find current in 10 Ω resistor in the circuit shown in Fig. 1.106.

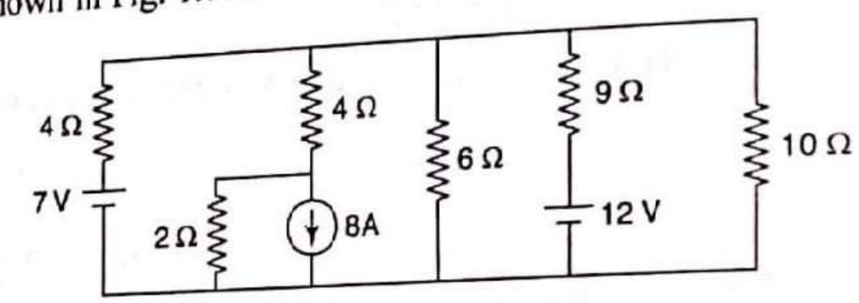

Fig. 1.106

Solution

In the circuit of Fig. 1.106, there are three combinations as follows:

(i) Series combinations of voltage source of 7 V and resistor of 4 Ω
(ii) Parallel combination of current source of 8 A and resistor of 2 Ω
(iii) Series combination of voltage source of 12 V and resistor of 9 Ω

Converting the above three combinations into equivalent combinations, we get the simplified circuit as follows:

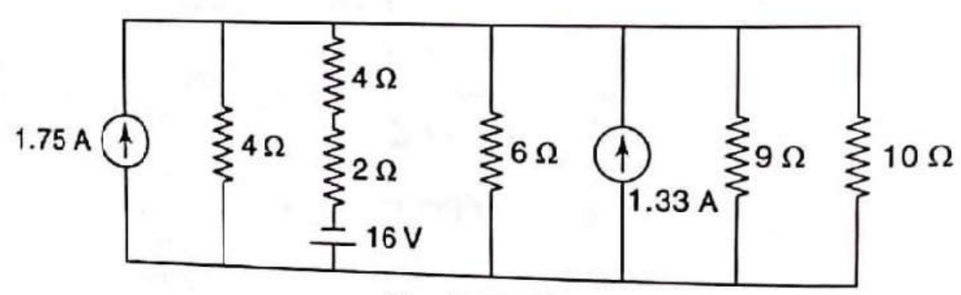

Fig. 1.107

In Fig. 1.107, resistors 4 Ω and 2 Ω are in series. Combining them, we obtain the following circuit:

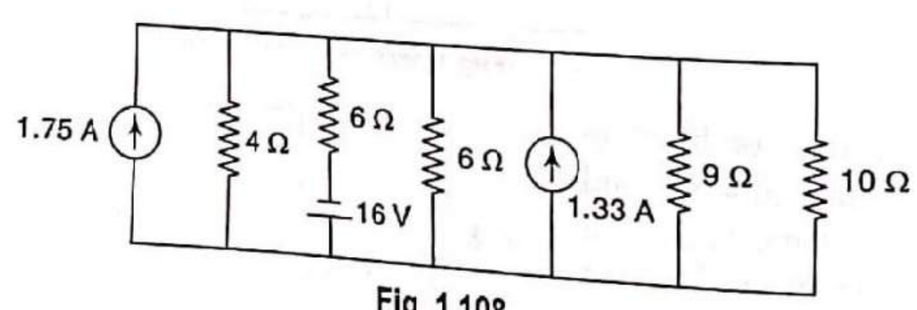

Fig. 1.108

Converting series combination of voltage source of 16 V and resistor of 6 Ω into equivalent parallel combination of current source and resistor, we get the simplified circuit as follows:

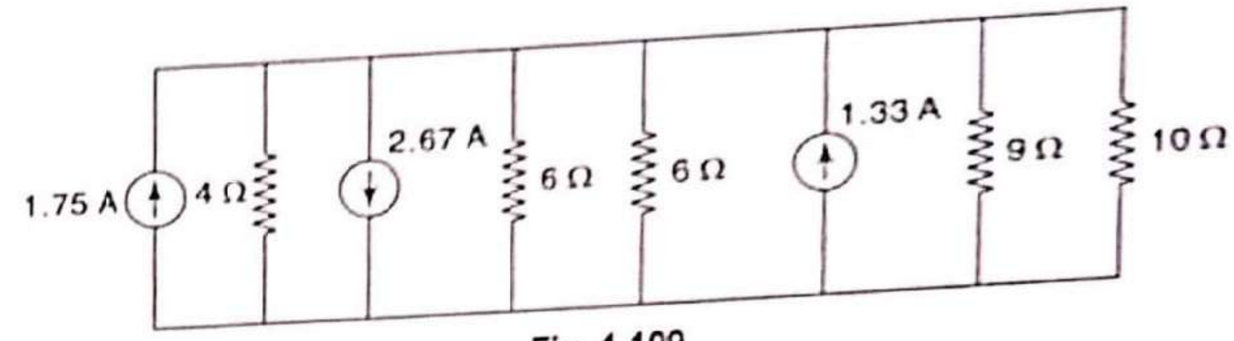

Fig. 1.109

In Fig. 1.109, all elements are in parallel. The resistors 4 Ω, 6 Ω, 6 Ω, and 9 Ω are in parallel. So, 4||6||6||9 = 1.44 Ω.

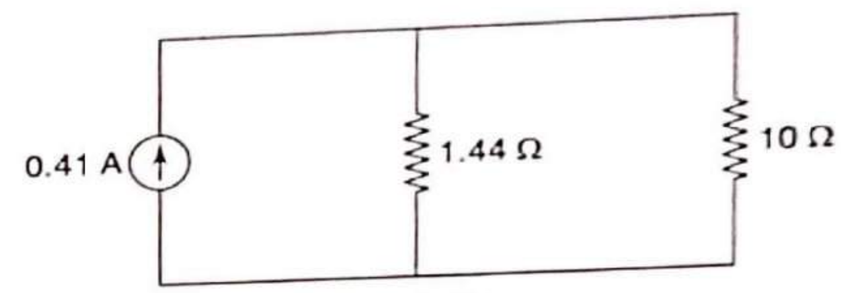

Fig. 1.110

Converting parallel combination of current source of 0.41 A and resistor of 1.44 Ω into equivalent series combination of voltage source and resistor, the circuit of Fig. 1.110 is further simplified as shown in Fig. 1.111. By Ohm's law, we get

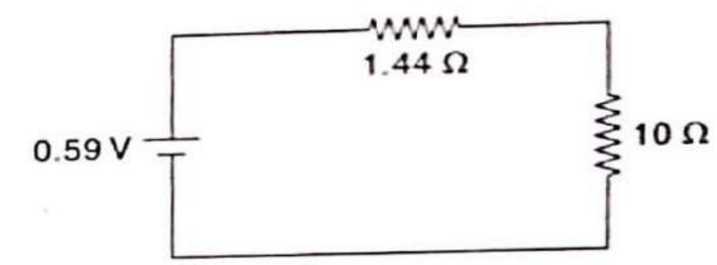

Fig. 1.111

$$I_{10\Omega} = \frac{0.59}{1.44+10} = 0.0516\text{ A }(\downarrow)$$

1.12 Kirchhoff's Laws

Consider Fig. 1.112. While discussing Kirchhoff's laws and techniques, one often comes across the terms such as active element, passive element, node, junction, etc. These are discussed below.

Active element

An **active element** is one that supplies electrical energy to the circuit. Thus, in Fig. 1.112, V_1 and V_2 are the active elements because they supply energy to the circuit.

Passive element

A **passive element** is one that receives electrical energy, then either converts it into heat (resistance) or stores in electric field (capacitance) or magnetic field (inductance). In Fig. 1.112, there are three passive elements, namely R_1, R_2, and R_3. These passive elements (i.e., resistance in this case) receive energy from the active elements (i.e., V_1 and V_2) and convert it into heat.

Node

A **node** of network is an equipotential surface at which two or more circuit elements are joined. Thus, in Fig. 1.112, circuit elements R_1 and V_1 are joined at A and hence, A is the node. Similarly, B, C, and D are nodes.

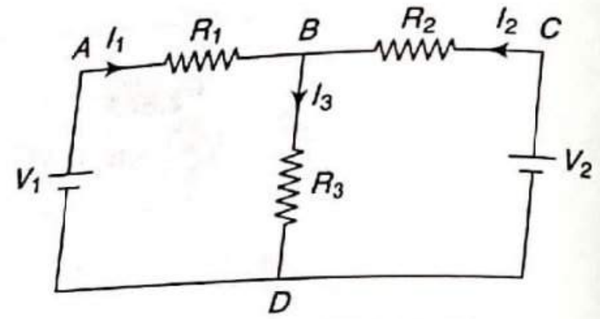

Fig. 1.112 Illustration of Kirchhoff's law

Junction

A **junction** is that point in a network where three or more circuit elements are joined. In Fig. 1.112, there are only two junction points, viz. B and D. That B is a junction is clear from the fact that three circuit elements R_1, R_2, and R_3 are joined at it. Similarly, point D is a junction because it joins three circuit elements R_3, V_1, and V_2. All the junctions are the nodes but all the nodes are not junctions.

Branch

A **branch** is the part of a network lying between two junction points. Thus, referring to Fig. 1.112, there are total of three branches, viz. BAD, BCD, and BD. The branch BAD consists of R_1 and V_1, the branch BCD consists of R_2 and V_2, and branch BD merely consists of R_3.

Loop

A **loop** is any closed path of a network. Thus, in Fig. 1.112, $ABDA$, $BCDB$, and $ABCDA$ are the loops.

Mesh

A **mesh** is the most elementary form of a loop and cannot be further divided into other loops. In Fig. 1.112, both loops $ABDA$ and $BCDB$ are meshes because they cannot be further divided into other loops. However, the loop $ABCDA$ cannot be called a mesh because it encloses two loops $ABDA$ and $BCDB$. All meshes are loops but all loops are not meshes.

1.12.1 Kirchhoff's Current Law (KCL)

This law relates to the currents at the junction points of a circuit and is stated below:

The algebraic sum of currents meeting at a junction or node in an electric circuit is zero.

Consider five conductors, carrying currents I_1, I_2, I_3, I_4, and I_5 meeting at node A as shown in Fig. 1.113. An algebraic sum is one in which the sign of the quantity is taken into account. If we take the signs of the currents flowing towards node A as positive, then currents flowing away from node A will be assigned negative sign. Thus, applying Kirchhoff's current law to node A in Fig. 1.113,

$$I_1 + (-I_2) + I_3 + (-I_4) + I_5 = 0$$

Hence, $I_1 - I_2 + I_3 - I_4 + I_5 = 0$

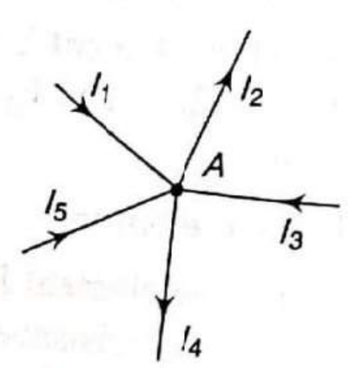

Fig. 1.113 Kirchhoff's current law

or $\quad I_1 + I_3 + I_5 = I_2 + I_4$

So, Incoming currents = Outgoing currents

Thus, the above law can also be stated as:

The sum of currents flowing towards any junction in an electric circuit is equal to the sum of currents flowing away from that junction.

1.12.2 Kirchhoff's Voltage Law (KVL)

This law relates to the electromotive forces and the voltage drops in a circuit and is stated below:

In any closed circuit or mesh, the algebraic sum of the electromotive forces and the voltage drops is equal to zero.

If we start from any point in a closed circuit and go back to that point, after going round the circuit, there is no increase or decrease in potential at that point. This means that the sum of electromotive forces of all the sources met on the way, and the voltage drops in the resistances must be zero.

1.12.3 Sign Conventions

While applying Kirchhoff's voltage law to a closed circuit, algebraic sums are considered. Therefore, it is very important to assign proper signs to emf's and voltage drops in the closed circuit. The follwing sign convention may be followed.

A rise in potential can be assumed positive while a fall in potential can be considered negative. The reverse is also possible and both conventions will give the same result.

(a) If we go from positive terminal of the battery or source to negative terminal, there is a fall in potential and so, the emf should be assigned negative sign. If we go from negative terminal of the battery or source to positive terminal, there is a rise in potential and so, the emf should be given positive sign.

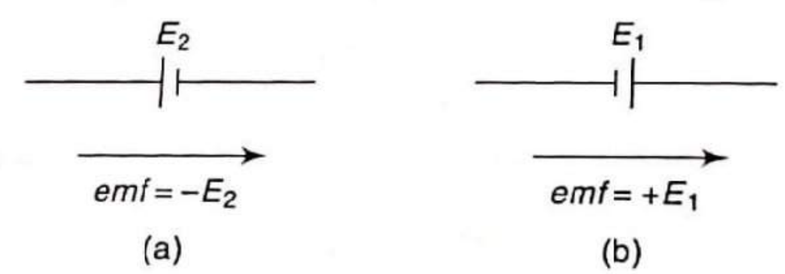

Fig. 1.114 Sign convention for emf

(b) When current flows through a resistor, there is a voltage drop across it. If we go through the resistance in the same direction as the current, there is a fall in the potential and so, the sign of this voltage drop is negative. If we go opposite to the direction of current flow, there is a rise in potential and hence, this voltage drop should be given positive sign.

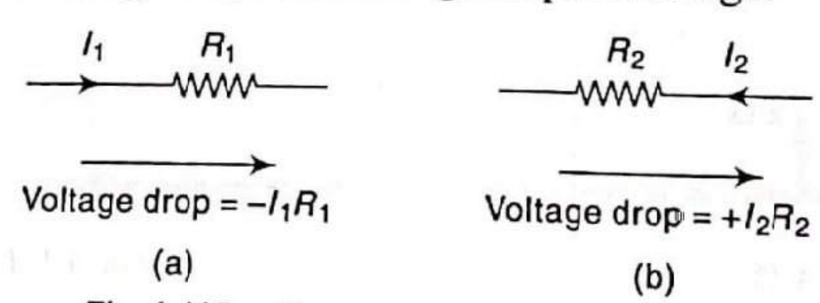

Fig. 1.115 Sign convention for voltage drop

Thus, applying the KVL to loop *ABDA* of the circuit of Fig. 1.112, we get

$$V_1 - I_1R_1 - I_3R_3 = 0$$

Applying the KVL to loop *ABCDA* of a circuit of Fig. 1.112, we get

$$V_1 - I_1R_1 + I_2R_2 - V_2 = 0$$

By using Kirchhoff's laws, we can calculate the unknown electrical quantities as discussed in the next sub-section.

1.12.4 Solving Circuit Problems by using Kirchhoff's Laws

1. Assume unknown currents in the given circuit and show their directions by arrows (see the note below).
2. By using KVL, write the equations for as many loops as the number of unknown currents.
3. In a solution if value of any unknown current comes out to be negative, it means that actual direction of the current is opposite to that of assumed direction.

Note: Procedure for assigning the unknown currents

1. Go to the junction and mark the current directions arbitrarily.
   For example, at junction *B* of a circuit shown in Fig. 1.117, three branches are meeting. The directions of three branch currents can be assigned as shown below:

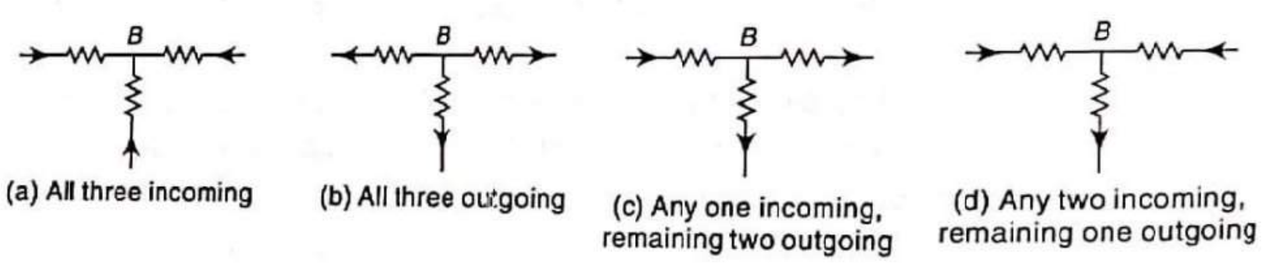

(a) All three incoming (b) All three outgoing (c) Any one incoming, remaining two outgoing (d) Any two incoming, remaining one outgoing

2. Name (mark) these currents using KCL so as to minimize the number of unknowns, i.e., in the above case, out of three if any two currents are marked as I_1 and I_2, then the third must be marked in terms of I_1 and I_2 (not as I_3).

Example 1.31 By using Kirchhoff's laws, calculate the branch currents in the circuit shown in Fig. 1.116.

Solution

By marking the different nodes and assuming the unknown currents, we get the circuit as shown in Fig. 1.117.

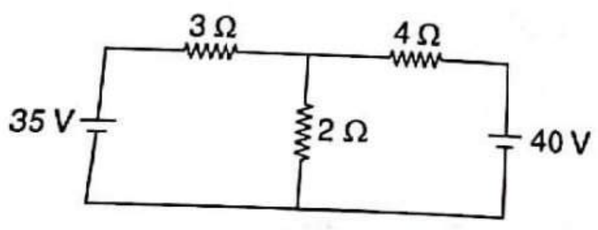

Fig. 1.116

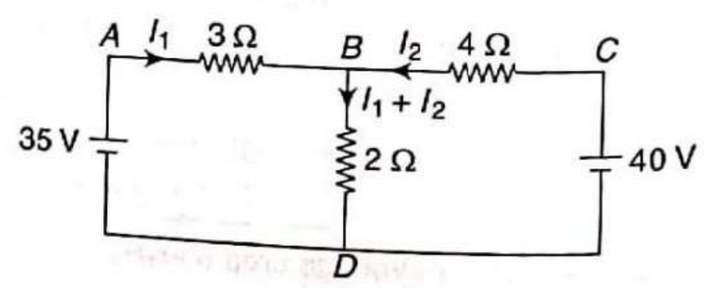

Fig. 1.117

Applying the KVL to loop *ABDA*,

$$-3I_1 - 2(I_1 + I_2) + 35 = 0$$

or $\quad 5I_1 + 2I_2 = 35 \qquad$ (i)

Applying the KVL to loop *ABCDA*,

$$-3I_1 + 4I_2 - 40 + 35 = 0$$

or $\quad 3I_1 - 4I_2 = -5 \qquad$ (ii)

From Eqs (i) and (ii),

$$I_1 = 5 \text{ A} \quad \text{and} \quad I_2 = 5 \text{ A}$$

Thus, $I_{3\Omega} = 5$ A (→), $I_{4\Omega} = 5$ A (←), $I_{2\Omega} = 10$ A (↓).

Example 1.32 By using Kirchhoff's laws, calculate the branch currents in the circuit shown in Fig. 1.118.

Solution

By marking the different nodes and assuming the unknown currents, we get the circuit as shown in Fig. 1.119.

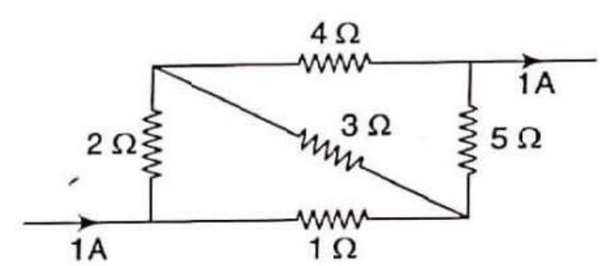

Fig. 1.118

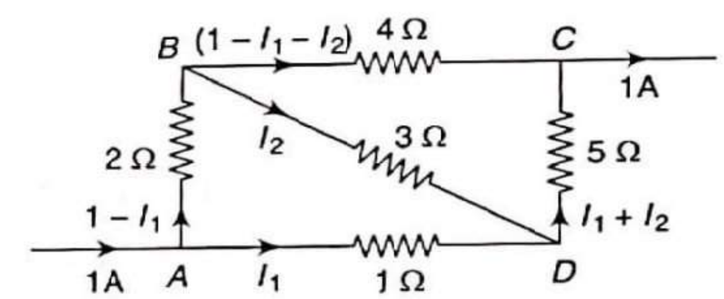

Fig. 1.119

Applying the KVL to loop *ABDA*,

$$-2(1 - I_1) - 3I_2 + I_1 = 0$$

or $\quad 3I_1 - 3I_2 = 2 \qquad$ (i)

Applying the KVL to loop *BCDB*,

$$-4(1 - I_1 - I_2) + 5(I_1 + I_2) + 3I_2 = 0$$

or $\quad 9I_1 + 12I_2 = 4 \qquad$ (ii)

From Eqs (i) and (ii),

$$I_1 = 0.571 \text{ A} \quad \text{and} \quad I_2 = -0.0952 \text{ A}$$

Branch currents are given by

$I_{1\Omega} = I_1 = 0.571$ A, from *A* to *D*

$I_{2\Omega} = 1 - I_1 = 0.429$ A, from *A* to *B*

$I_{3\Omega} = I_2 = -0.0952$ A, from *B* to *D*

$I_{4\Omega} = 1 - I_1 - I_2 = 0.524$ A, from *B* to *C*

$I_{5\Omega} = I_1 + I_2 = 0.475$ A, from *D* to *C*

Example 1.33 Determine the current supplied by the battery in the circuit shown in Fig. 1.120.

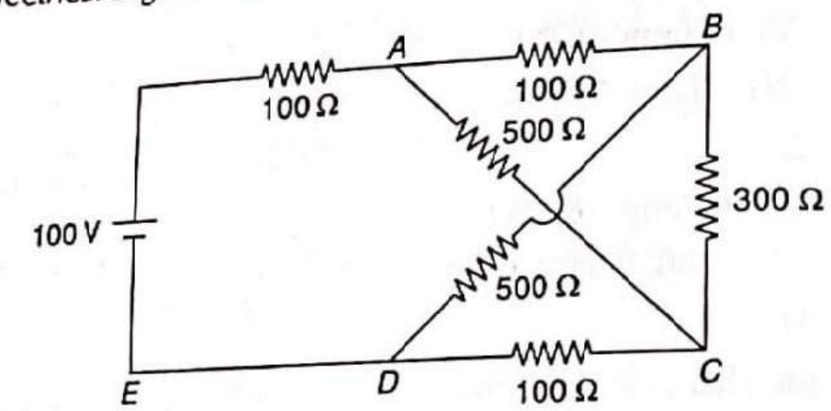

Fig. 1.120

Solution

Let the current distribution be as shown in Fig. 1.121.

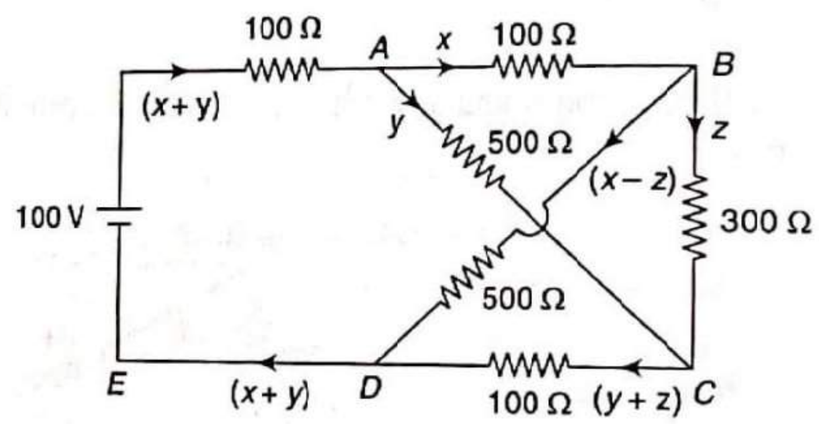

Fig. 1.121

Applying the KVL to loop *ABCA*, we have

$$-100x - 300z + 500y = 0$$

or $\quad x - 5y + 3z = 0 \qquad$ (i)

Similarly, applying the KVL to loop *BCDB*, we have

$$-300z - 100(y + z) + 500(x - z) = 0$$

or $\quad 5x - y - 9z = 0 \qquad$ (ii)

Similarly, applying the KVL to loop *ABDEA*, we have

$$-100x - 500(x - z) + 100 - 100(x + y) = 0$$

or $\quad 7x + y - 5z = 1 \qquad$ (iii)

The values of x, y and z may be found by solving the above three simultaneous equations or by the method of determinants as given below:

Putting the above three equations in the matrix form, we have

$$\begin{bmatrix} 1 & -5 & 3 \\ 5 & -1 & -9 \\ 7 & 1 & -5 \end{bmatrix}\begin{bmatrix} x \\ y \\ z \end{bmatrix} = \begin{bmatrix} 0 \\ 0 \\ 1 \end{bmatrix}$$

$$\Delta = \begin{vmatrix} 1 & -5 & 3 \\ 5 & -1 & -9 \\ 7 & 1 & -5 \end{vmatrix} = 240, \qquad \Delta_1 = \begin{vmatrix} 0 & -5 & 3 \\ 0 & -1 & -9 \\ 1 & 1 & -5 \end{vmatrix} = 48$$

$$\Delta_2 = \begin{vmatrix} 1 & 0 & 3 \\ 5 & 0 & -9 \\ 7 & 1 & -5 \end{vmatrix} = 24, \qquad \Delta_3 = \begin{vmatrix} 1 & -5 & 0 \\ 5 & -1 & 0 \\ 7 & 1 & 1 \end{vmatrix} = 24$$

This gives $x = \dfrac{\Delta_1}{\Delta} = \dfrac{48}{240} = \dfrac{1}{5}$ A, $\quad y = \dfrac{\Delta_2}{\Delta} = \dfrac{24}{240} = \dfrac{1}{10}$ A, $\quad z = \dfrac{\Delta_3}{\Delta} = \dfrac{24}{240} = \dfrac{1}{10}$ A

Hence, current supplied by the battery is $= x + y = \dfrac{1}{5} + \dfrac{1}{10} = \dfrac{3}{10}$ A

Example 1.34 Determine the current through 20 Ω resistor in the circuit shown in Fig. 1.122.

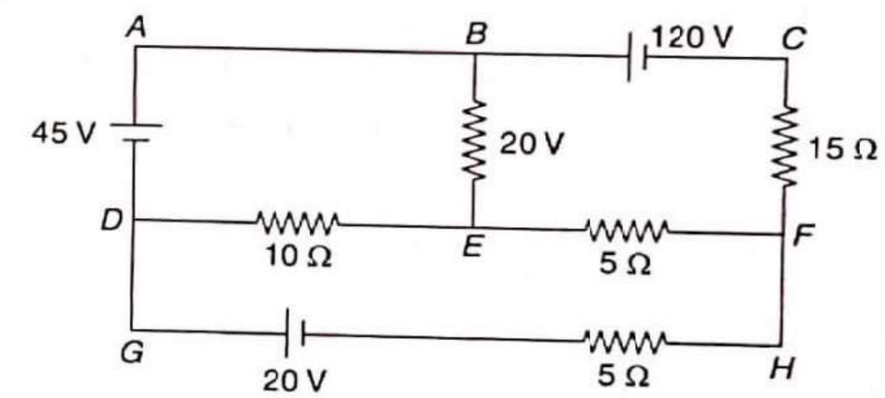

Fig. 1.122

Solution

Let the current distribution be as shown in Fig. 1.123.

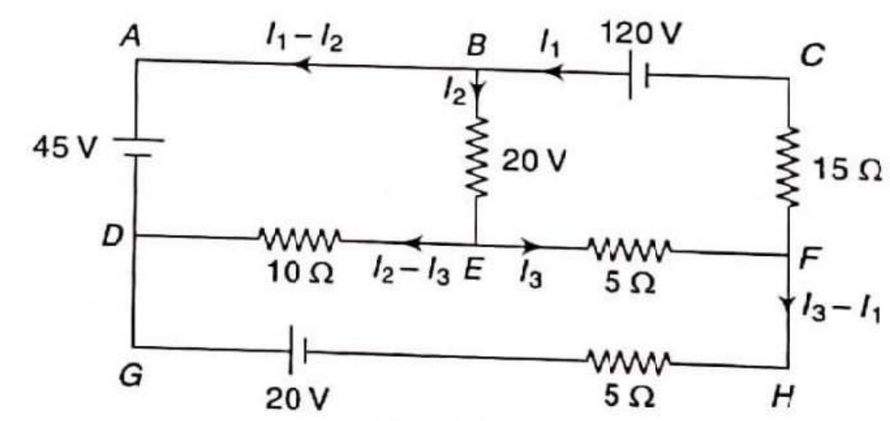

Fig. 1.123

Applying the KVL to loop *ABEDA*, we have

$$-20I_2 - 10(I_2 - I_3) + 45 = 0$$

or $\quad 30I_2 - 10I_3 = 45$

or $\quad 6I_2 - 2I_3 = 9 \qquad$ (i)

Applying the KVL to loop *BCFEB*, we have

$$-120 + 15I_1 + 5I_3 + 20I_2 = 0$$

or $\quad 15I_1 + 20I_2 + 5I_3 = 120$

or $\quad 3I_1 + 4I_2 + I_3 = 24 \qquad$ (ii)

Applying the KVL to loop *DEFHGD*, we have

$$10(I_2 - I_3) - 5I_3 - 5(I_3 - I_1) + 20 = 0$$

or $5I_1 + 10I_2 - 20I_3 = -20$ (iii)

or $I_1 + 2I_2 - 4I_3 = -4$

Current through 20 Ω is required. According to the current distribution as shown in Fig. 1.123, current I_2 flows through 20 Ω resistor. Current I_2 can be calculated by the method of determinants as given below. Putting the above three equations in the matrix form, we have

$$\begin{bmatrix} 0 & 6 & -2 \\ 3 & 4 & 1 \\ 1 & 2 & -4 \end{bmatrix} \begin{bmatrix} I_1 \\ I_2 \\ I_3 \end{bmatrix} = \begin{bmatrix} 9 \\ 24 \\ -4 \end{bmatrix}$$

$$\Delta = \begin{vmatrix} 0 & 6 & -2 \\ 3 & 4 & 1 \\ 1 & 2 & -4 \end{vmatrix} = 74, \qquad \Delta_2 = \begin{vmatrix} 0 & 9 & -2 \\ 3 & 24 & 1 \\ 1 & -4 & -4 \end{vmatrix} = 189$$

By Cramer's rule, $I_2 = \dfrac{\Delta_2}{\Delta} = \dfrac{189}{74} = 2.554$ A

Hence, current through 20 Ω resistor, $I_{20\Omega} = 2.554$ A (↓)

Example 1.35 Find (i) I_x if $I_y = 2$ A and $I_z = 0$ A
(ii) I_y if $I_x = 2$ A and $I_z = 2\,I_y$ A
(iii) I_z if $I_y = I_y = I_z$

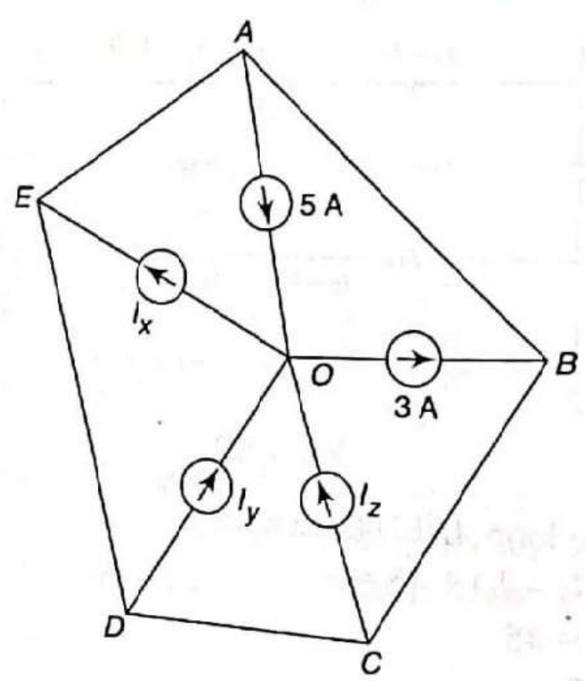

Fig. 1.124

Solution

(i) I_x if $I_y = 2$ A and $I_z = 0$ A

By applying KCL at Node O, we get

$$5 + I_z + I_y = I_x + 3$$
$$5 + 0 + 2 = I_x + 3$$
$$I_x = 4 \text{ A}$$

(ii) I_y if $I_x = 2$ A and $I_z = 2\,I_y$ A

By applying KCL at Node O, we get

$$5 + I_z + I_y = I_x + 3$$
$$5 + 2I_y + I_y = 2 + 3$$
$$I_y = 0 \text{ A}$$

(iii) I_z if $I_y = I_y = I_z$

By applying KCL at Node O, we get

$$5 + I_z + I_y = I_x + 3$$
$$5 + I_z + I_z = I_z + 3$$
$$I_z = -2 \text{ A}$$

Example 1.36 Calculate the power dissipation in each resistor in the network shown in Fig. 1.125.

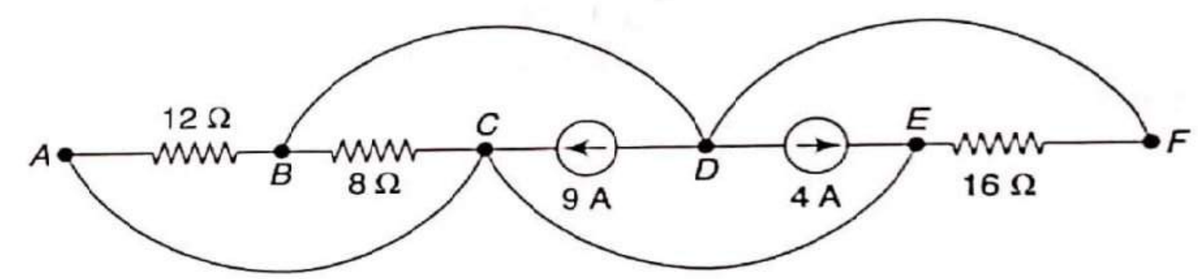

Fig. 1.125

Solution

In Fig. 1.125, the nodes A, C and E are same. Similarly the nodes B, D, and F are same. By joining the same nodes, the circuit simplifies as shown in Fig. 1.126.

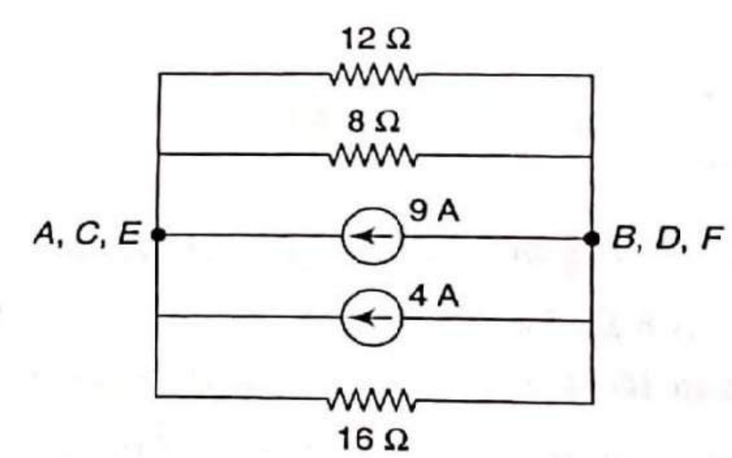

Fig. 1.126

By adding the current sources, we get,

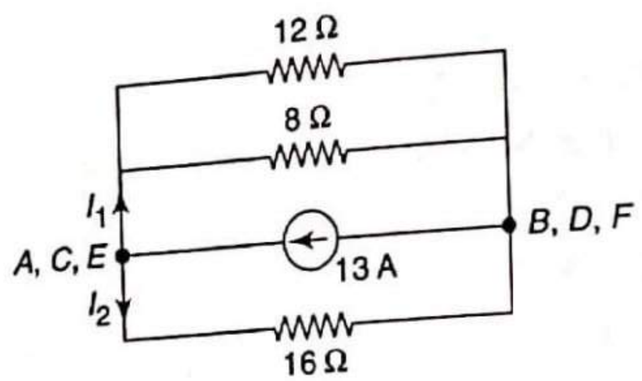

Fig. 1.127

In Fig. 1.127, 12 Ω and 8 Ω are in parallel. So 12Ω||8Ω = 4.8 Ω.

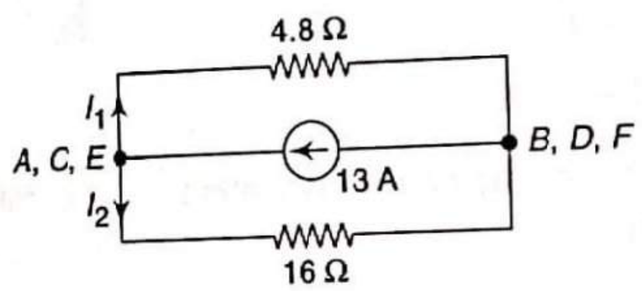

Fig. 1.128

In Fig. 1.128, let the total current 13 A divides as I_1 and I_2.
By current division rule,

$$I_1 = \frac{13 \times 16}{16 + 4.8} = 10 \text{ A}$$

$$I_2 = I_{16\,\Omega} = \frac{13 \times 4.8}{16 + 4.8} = 3 \text{ A}$$

In Fig. 1.127, the current I_1 divides in two parallel resistors (i.e. 12 Ω and 8 Ω).
So, by current division rule,

$$I_{8\,\Omega} = \frac{10 \times 12}{8 + 12} = 6 \text{ A}$$

$$I_{12\,\Omega} = \frac{10 \times 8}{8 + 12} = 4 \text{ A}$$

Now,

Power dissipation in 12 Ω, $P_{12\,\Omega} = (I_{12\,\Omega})^2 \times 12 = (4)^2 \times 12 = 192$ W

Power dissipation in 8 Ω, $P_{8\,\Omega} = (I_{8\,\Omega})^2 \times 8 = (6)^2 \times 8 = 288$ W

Power dissipation in 16 Ω, $P_{16\,\Omega} = (I_{16\,\Omega})^2 \times 16 = (3)^2 \times 16 = 144$ W

Example 1.37 Find the current in all branches of the network shown in Fig. 1.129.

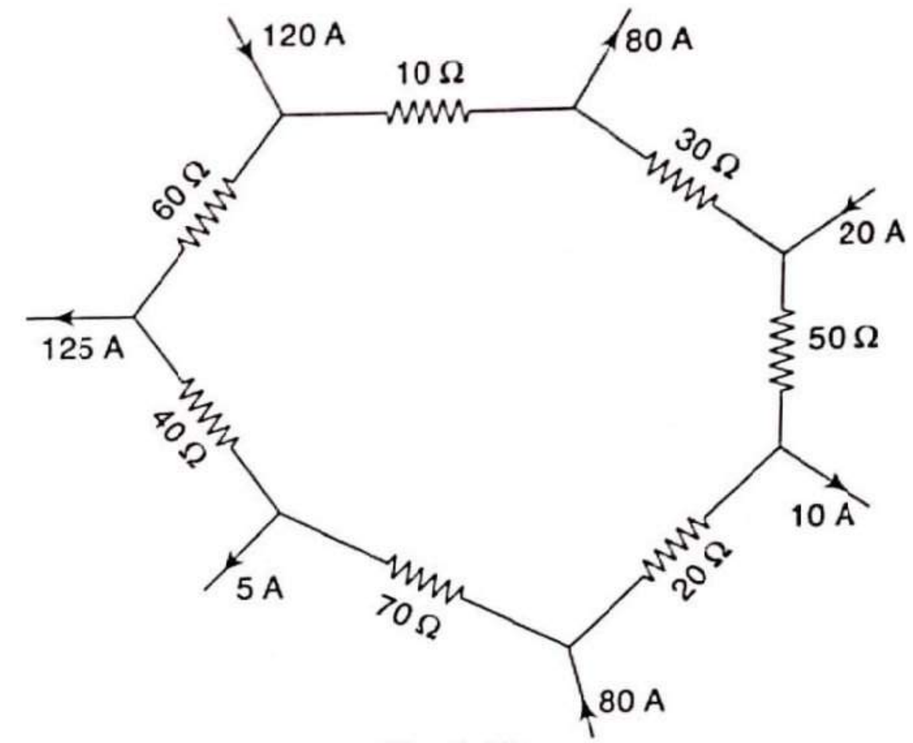

Fig. 1.129

Solution

By marking the different nodes and unknown currents, we get the circuit as follows:

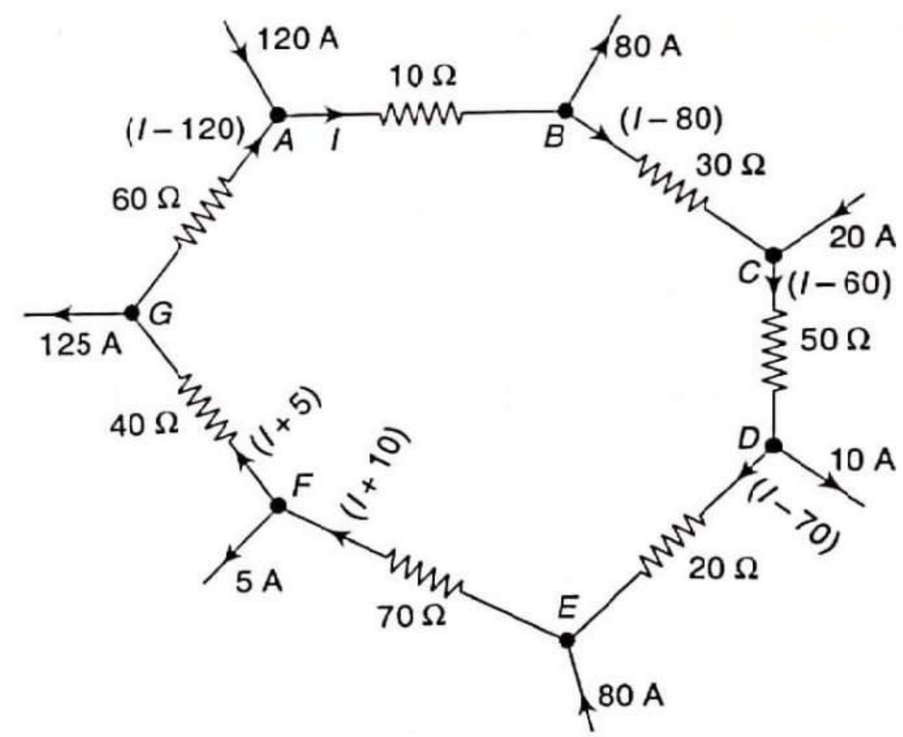

Fig. 1.130

Applying KVL to the loop, we get

$-30(I - 80) - 50(I - 60) - 20(I - 70) - 70(I + 10) - 40(I + 5) - 60(I - 120) - 10\,I = 0$

$-280I + 13100 = 0$

$\therefore \quad I = 46.786$ A

Thus $I_{10\,\Omega} = I = 46.786$ A from A to B

$I_{30\,\Omega} = (I - 80) = -33.214$ A from B to C

$I_{50\,\Omega} = (I - 60) = -13.214$ A from C to D

$I_{20\,\Omega} = (I - 70) = -23.214$ A from D to E

$I_{70\,\Omega} = (I + 10) = 56.786$ A from E to F
$I_{40\,\Omega} = (I + 5) = 51.786$ A from F to G
$I_{60\,\Omega} = (I - 120) = -73.214$ A from G to A

Example 1.38 For the network shown in Fig. 1.131, determine (i) I_1, I_2, and I_3, (ii) resistance R, and (iii) value of emf E.

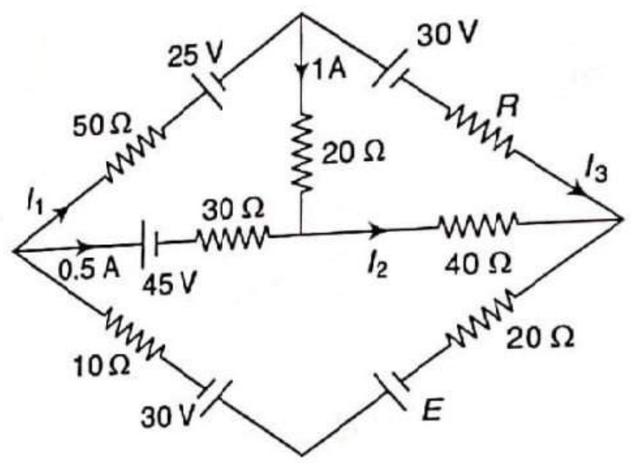

Fig. 1.131

Solution

Marking the different nodes, we obtain the circuit as shown in Fig. 1.132.

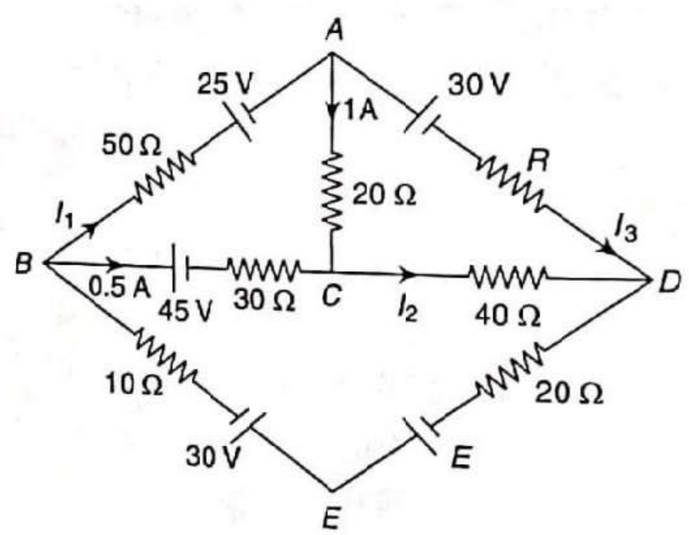

Fig. 1.132

(i) At node C, by applying KCL, we have

$0.5 + 1 = I_2 \quad \therefore \quad I_2 = 1.5$ A

Applying the KVL to loop $ACBA$, we have

$-20 + (30 \times 0.5) + 45 - (50 \times I_1) - 25 = 0$

$\therefore I_1 = 0.3$ A

At node A, by applying KCL, we have

$I_1 = 1 + I_3 \quad \therefore \quad I_3 = -0.7$ A

(ii) Applying the KVL to loop $ADCA$, we have

$-30 - I_3R + 40I_2 + (20 \times 1) = 0$

Substituting the value of I_2 and I_3, we get

$R = -71.43\ \Omega$

(iii) At node D, by applying KCL, we have

Current in branch $DEB = I_2 + I_3 = 0.8$ A

Applying the KVL to loop $DEBCD$, we have

$(-20 \times 0.8) + E - 30 - (10 \times 0.8) - 45 - (30 \times 0.5) - (40 \times 1.5) = 0$

or $E = 174$ V

Example 1.39 Find the potential at point a with respect to point b (V_{ab}) in the network shown in Fig. 1.133.

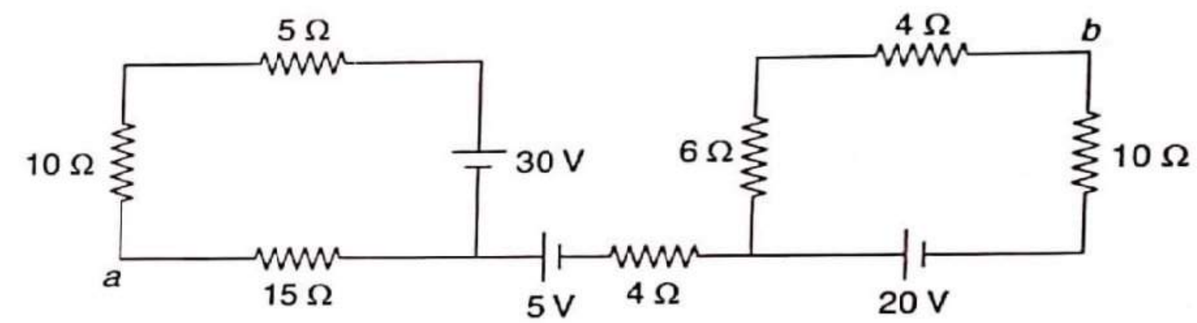

Fig. 1.133

Solution

Marking the different nodes and assuming the unknown currents, we get the following circuit:

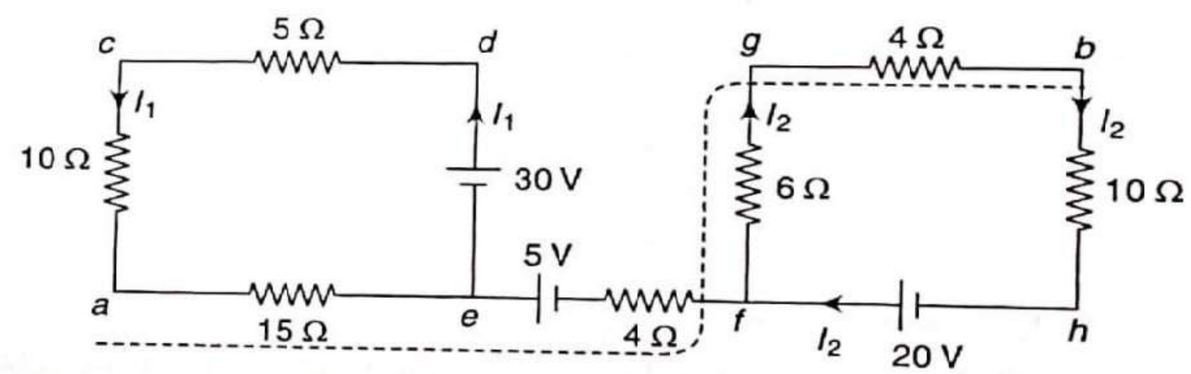

Fig. 1.134

Let us first calculate the unknown currents.

Applying the KVL to loop $acdea$, we have

$10I_1 + 5I_1 - 30 + 15I_1 = 0$

Hence, $I_1 = 1$ A

Applying the KVL to loop $fgbhf$, we have

$-6I_2 - 4I_2 - 10I_2 + 20 = 0$

Hence, $I_2 = 1$ A

As there is no returning path (closed path) for branch ef, no current flows through branch ef, i.e., $I_{ef} = 0$.

The potential at point a with respect to b (V_{ab}) can be calculated by travelling from point b to point a through any path and taking the algebraic sum of electromotive forces of all the sources and voltage drops across the resistances met on the way. Let the selected path is $bgfea$ (as shown by dotted line).

Thus, taking path *bgfea*, we have

$$V_{ab} = 4I_2 + 6I_2 + (4 \times 0) + 5 + 15I_1$$

Hence, $V_{ab} = 30$ V

Example 1.40 Find the potential at point *e* with respect to *c* (V_{ce}) in the network shown in Fig. 1.135.

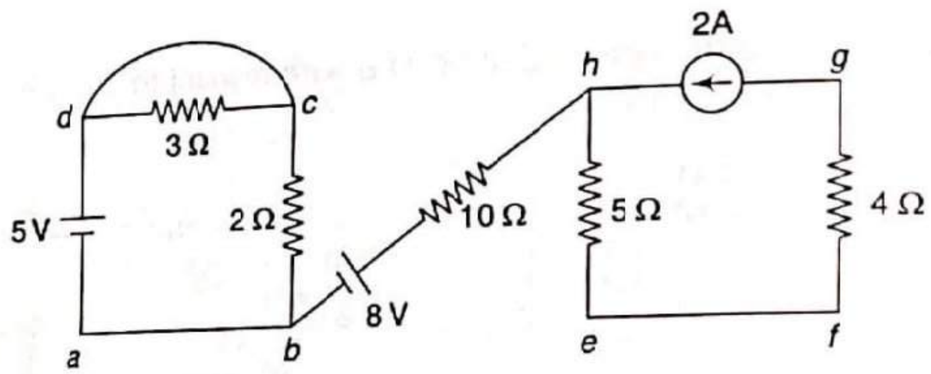

Fig. 1.135

Solution

Assuming the unknown currents, we get the following circuit:

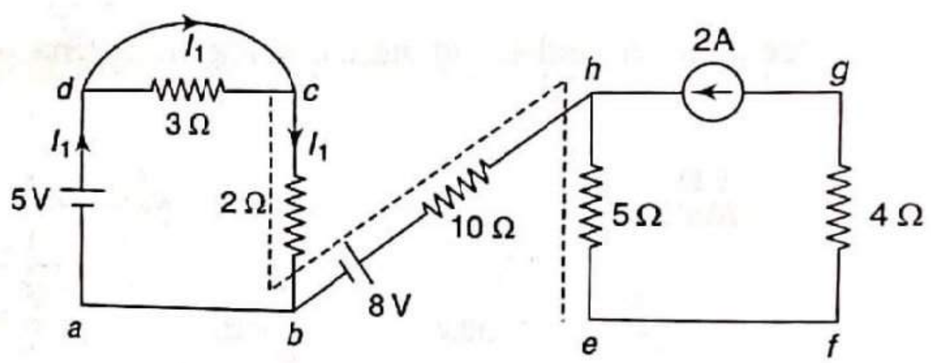

Fig. 1.136

Let us first calculate the unknown currents.

As there is no returning path (closed path) for branch *bh*, no current flows through branch *bh*, i.e., $I_{bh} = 0$.

The 3 Ω resistor gets short circuited. $\therefore I_{3\,\Omega} = 0$

Current through the loop *efgh* is 2A.

Current through the loop *abcd* can be calculated by applying KVL to loop *abcd*.

Applying KVL to loop *abcd*, we have

$$-2I_1 + 5 = 0$$

So, $I_1 = 2.5$ A

Let the selected path is *ehbc* (as shown by dotted line).

Thus, taking path *ehbc*, we have

$$V_{ce} = (5 \times 2) + (10 \times 0) - 8 + 2I_1$$

Hence, $V_{ce} = 7$ V

Example 1.41 Find $V_{aa'}$ in the network shown in Fig. 1.137.

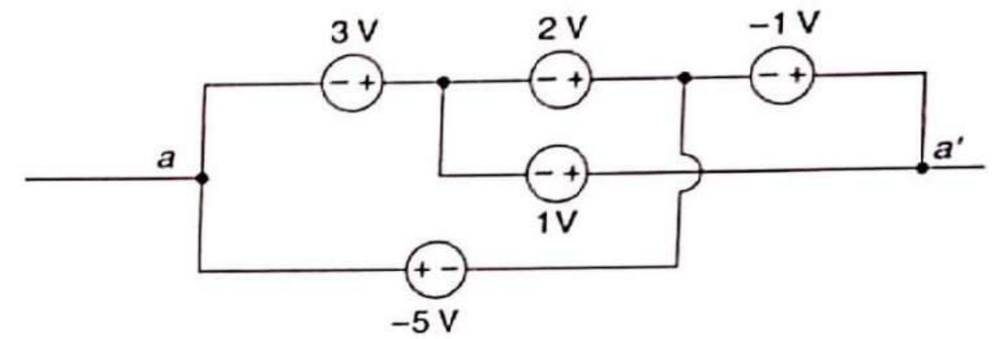

Fig. 1.137

Solution

Marking the different nodes, we get Fig. 1.138.

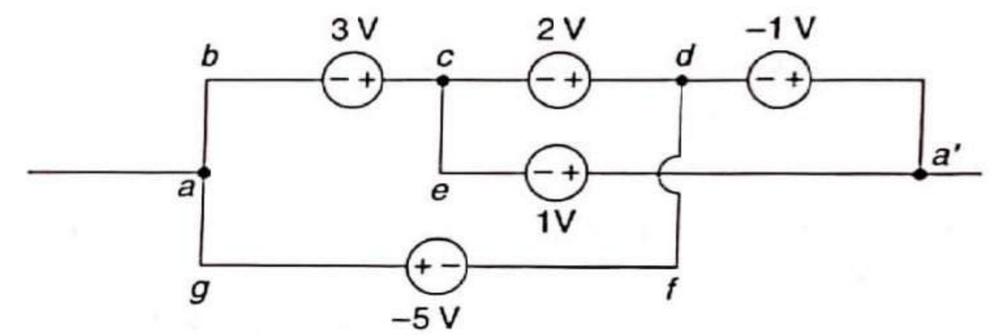

Fig. 1.138

$V_{aa'}$ can be calculated by travelling from point *a'* to point *a* through any path and taking the algebraic sum of emf's of all the sources. Let the selected path is *a'dcba*.

Taking path *a'dcba*, we have

$$V_{aa'} = -(-1) - 2 - 3$$

or $V_{aa'} = -4$ V

Example 1.42 The voltage drop across the 15 Ω resistor in the circuit of Fig. 1.139 is 30 V having the polarity indicated. Find the value of *R*.

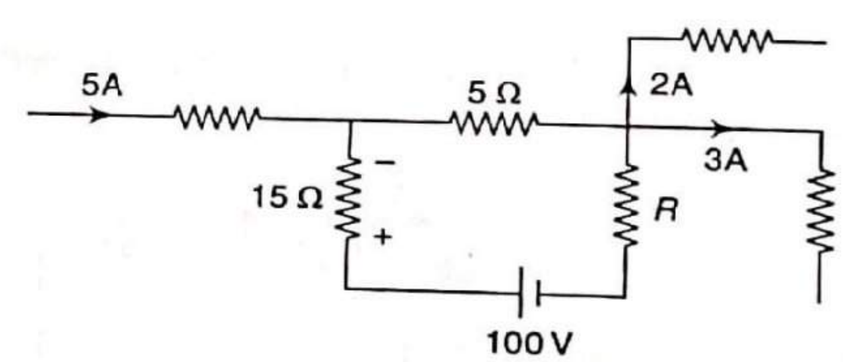

Fig. 1.139

Solution

Marking the different nodes, we get the following circuit:

Let the current through 15 Ω resistor is *I* A. In order to produce the voltage drop having the polarity as shown in Fig. 1.139, the current *I* must flow in upward direction as shown in Fig. 1.140.

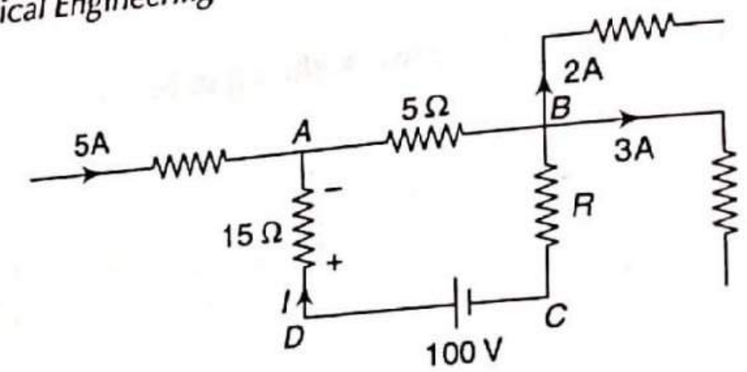

Fig. 1.140

Voltage drop across 15 Ω = 30 V (given)

So, $I \times 15 = 30$

or $I = 2$ A

At node A, by applying KCL, we have

Current through 5 Ω resistor, $I_{5\Omega} = 7$ A(→)

Applying the KVL to loop $ABCDA$, we have

$$-(7 \times 5) - IR + 100 - 30 = 0$$

or $R = 17.5\ \Omega$

Example 1.43 Using source transformation, find V_A and V_B in the given circuit shown in Fig. 1.141.

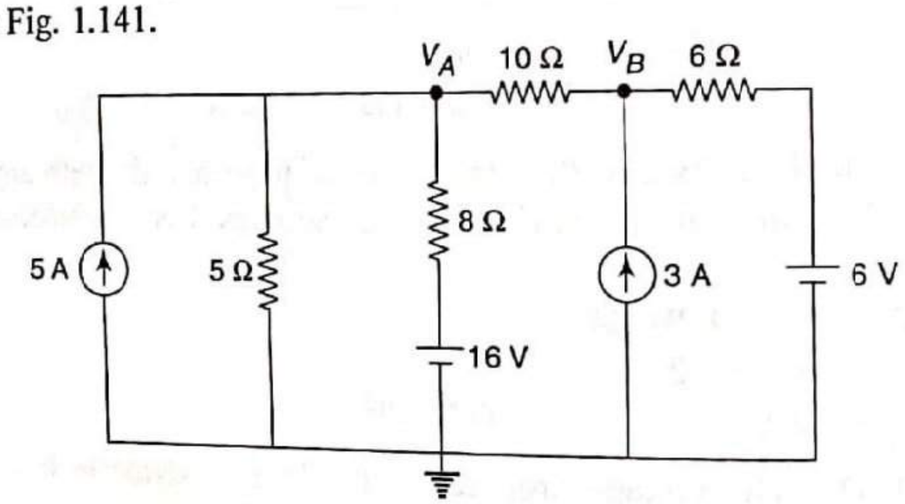

Fig. 1.141

Solution

The series combinations (of voltage source and resistor) are marked in the given circuit as shown in Fig. 1.142.

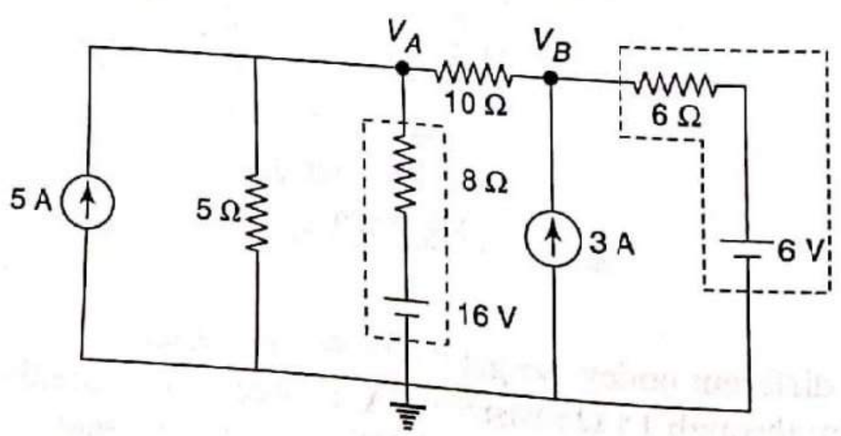

Fig. 1.142

By converting the series combinations into equivalent parallel combinations (of current source and resistor), we get the circuit as shown in Fig. 1.143.

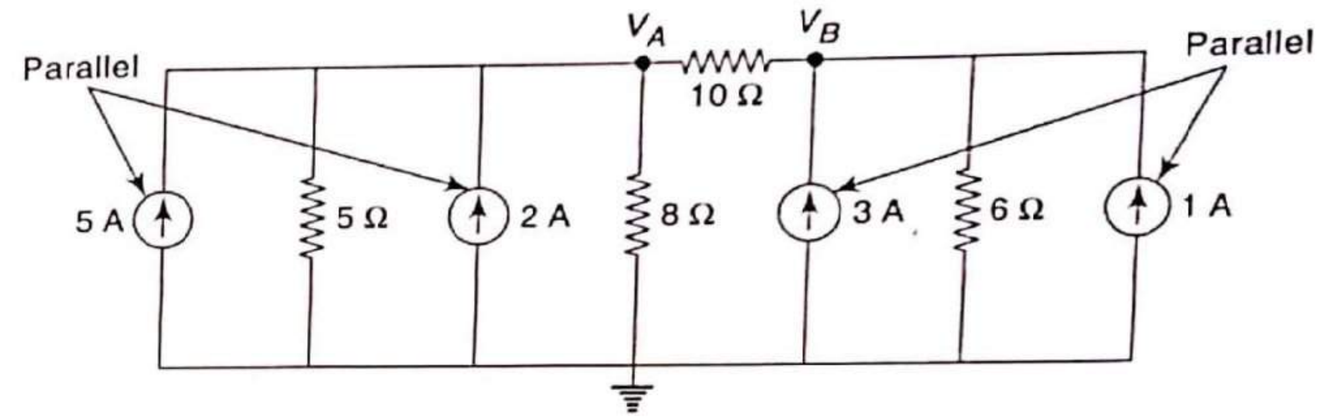

Fig. 1.143

By adding the parallel current sources, we get the circuit as shown in Fig. 1.144.

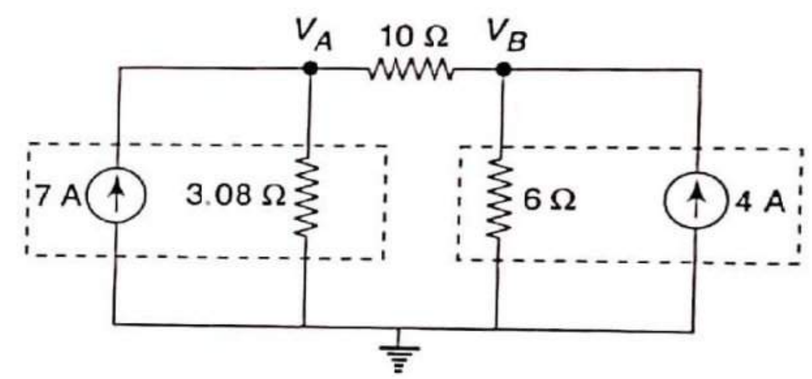

Fig. 1.144

The parallel combinations (of current source and resistor) are marked in Fig. 1.144. Replacing these parallel combinations into equivalent series combinations, we get the circuit as shown in Fig. 1.145.

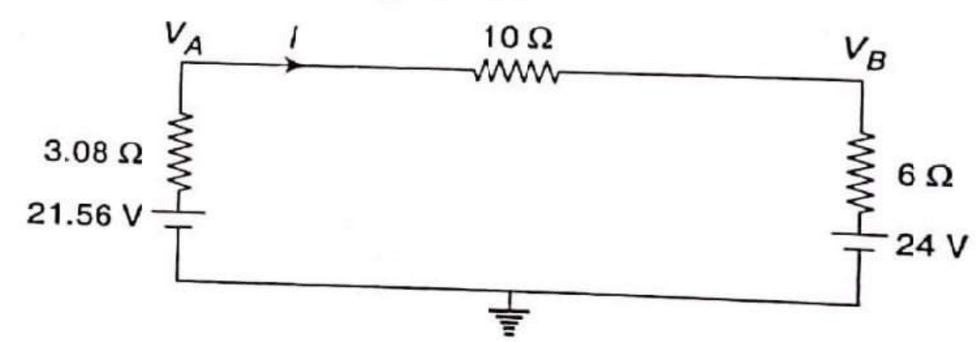

Fig. 1.145

Assuming the loop current I and applying KVL to the loop, we get

$$-10I - 6I - 24 + 21.56 - 3.08I = 0$$

$$-19.08I = 2.44$$

$$I = -0.128 \text{ A}$$

Referring Fig. 1.145,

$$V_A = 21.56 - 3.08I = 21.56 - 3.08\,(-0.128) = 21.95 \text{ V}$$

$$V_B = 24 + 6I = 24 + 6\,(-0.128) = 23.232 \text{ V}$$

1.13 Star–Delta (Y–Δ) Transformation

We know that by using series/parallel circuit rules, we can reduce or simplify the circuit. But there are some networks in which the resistances are neither in series nor in parallel and are connected in Y- or Δ-connection. In such a situation, it is not possible to simplify the network by series/parallel circuit rules. However, converting Δ-connection into equivalent Y-connection and vice versa, a network can be simplified and application of series/parallel circuit rules is made possible.

Figure 1.146(a) shows three resistances R_{12}, R_{23}, and R_{31} connected in delta, while Fig. 1.146(b) shows three resistances R_1, R_2, and R_3 connected in star.

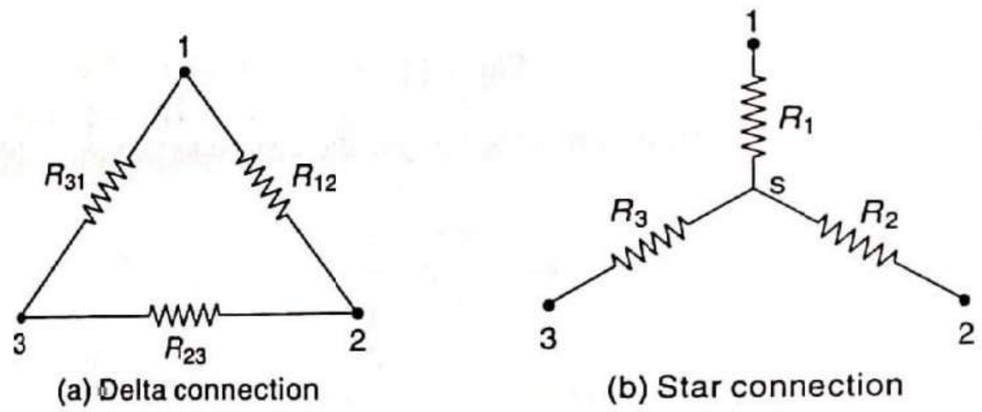

Fig. 1.146

The two connections will be electrically equivalent if the resistance as measured between any pair of terminals is the same in both arrangements.

1.13.1 Delta (Δ) to Star (Y) Transformation

Referring to delta network in Fig. 1.146(a),

Resistance between terminals 1 and 2 $= R_{12} \parallel (R_{23} + R_{31}) = \dfrac{R_{12}(R_{23}+R_{31})}{R_{12}+R_{23}+R_{31}}$ (1.6)

Referring to star network in Fig. 1.146(b),

Resistance between terminals 1 and 2 $= R_1 + R_2$ (1.7)

Since two networks are electrically equivalent,

$$R_1 + R_2 = \frac{R_{12}(R_{23}+R_{31})}{R_{12}+R_{23}+R_{31}} \tag{1.8}$$

Similarly, it can be shown that between terminals 2 and 3 as well as 3 and 1,

$$R_2 + R_3 = \frac{R_{23}(R_{31}+R_{12})}{R_{12}+R_{23}+R_{31}} \tag{1.9}$$

and

$$R_3 + R_1 = \frac{R_{31}(R_{12}+R_{23})}{R_{12}+R_{23}+R_{31}} \tag{1.10}$$

Subtracting Eq. (1.9) from Eq. (1.8),

$$R_1 - R_3 = \frac{R_{12}R_{31} - R_{23}R_{31}}{R_{12}+R_{23}+R_{31}} \tag{1.11}$$

Adding Eqs (1.11) and (1.10),

$$R_1 = \frac{R_{12}R_{31}}{R_{12}+R_{23}+R_{31}} \tag{1.12}$$

Similarly,

$$R_2 = \frac{R_{23}R_{12}}{R_{12}+R_{23}+R_{31}} \tag{1.13}$$

$$R_3 = \frac{R_{31}R_{23}}{R_{12}+R_{23}+R_{31}} \tag{1.14}$$

Thus, star resistance connected to terminal is equal to the product of the two delta resistances connected to same terminal divided by the sum of the delta resistances.

1.13.2 Star (Y) to Delta (Δ) Transformation

Multiplying Eqs (1.12) and (1.13),

$$R_1R_2 = \frac{R_{12}^2 R_{23}R_{31}}{(R_{12}+R_{23}+R_{31})^2} \tag{1.15}$$

Multiplying Eqs (1.13) and (1.14),

$$R_2R_3 = \frac{R_{23}^2 R_{31}R_{12}}{(R_{12}+R_{23}+R_{31})^2} \tag{1.16}$$

Multiplying Eqs (1.14) and (1.12),

$$R_3R_1 = \frac{R_{31}^2 R_{12}R_{23}}{(R_{12}+R_{23}+R_{31})^2} \tag{1.17}$$

Adding Eqs (1.15), (1.16), and (1.17),

$$R_1R_2 + R_2R_3 + R_3R_1 = \frac{R_{12}R_{23}R_{31}(R_{12}+R_{23}+R_{31})}{(R_{12}+R_{23}+R_{31})^2}$$

or

$$R_1R_2 + R_2R_3 + R_3R_1 = \frac{R_{12}R_{23}R_{31}}{R_{12}+R_{23}+R_{31}}$$

or

$$R_1R_2 + R_2R_3 + R_3R_1 = R_{12}R_3 \quad \left[\because R_3 = \frac{R_{23}R_{31}}{R_{12}+R_{23}+R_{31}}\right]$$

Hence, $$R_{12} = R_1 + R_2 + \frac{R_1 R_2}{R_3} \quad (1.18)$$

Similarly, $$R_{23} = R_2 + R_3 + \frac{R_2 R_3}{R_1} \quad (1.19)$$

and $$R_{31} = R_3 + R_1 + \frac{R_3 R_1}{R_2} \quad (1.20)$$

Thus, the delta resistance between the two terminals is the sum of the two star resistances connected to the same terminals plus the product of the two resistances divided by the remaining third star resistance.

Example 1.44 Find the equivalent resistance between the terminals X and Y in the network shown in Fig. 1.147.

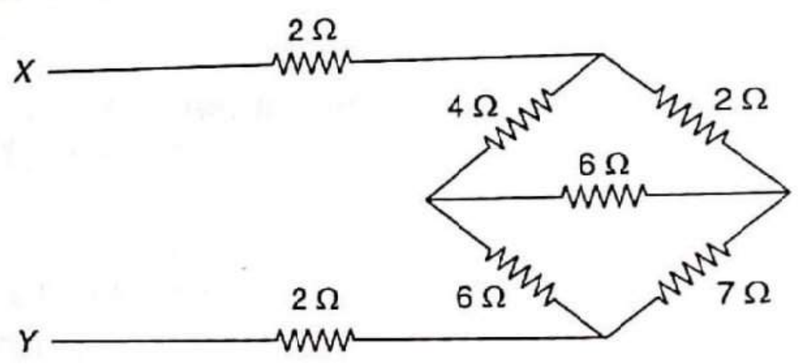

Fig. 1.147

Solution

Marking the different nodes, we get the following circuit:

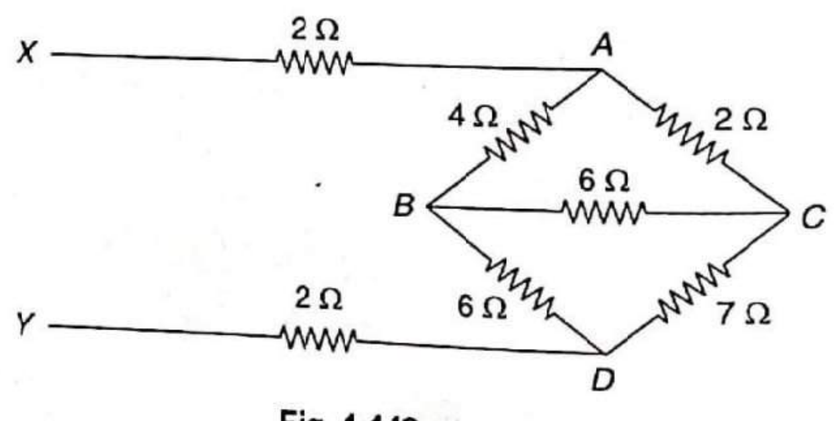

Fig. 1.148

Converting the delta connection formed by 4 Ω, 2 Ω, and 6 Ω resistors into equivalent star network, i.e., $\Delta\, ABC \Rightarrow Y\, ABC$, we get the following circuit:

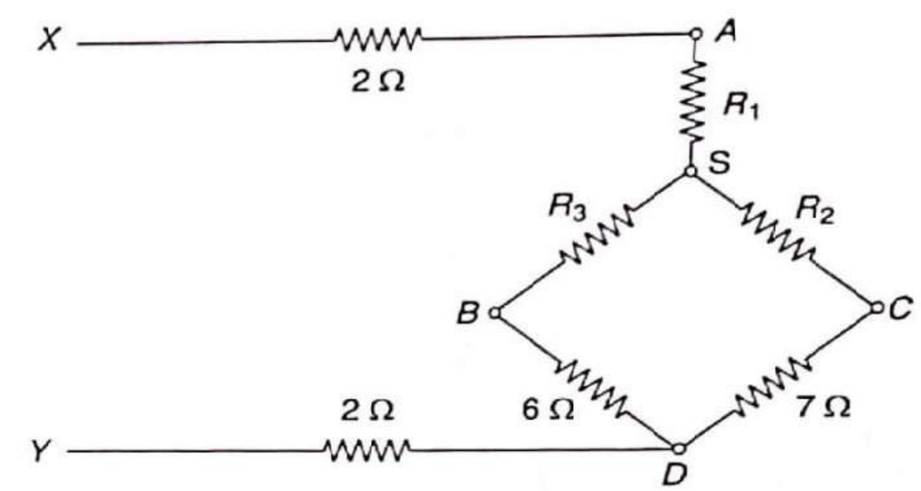

Fig. 1.149

$$R_1 = \frac{4 \times 2}{4+2+6} = 0.67\ \Omega$$

$$R_2 = \frac{6 \times 2}{4+2+6} = 1\ \Omega$$

$$R_3 = \frac{6 \times 4}{4+2+6} = 2\ \Omega$$

The simplified network is shown in Fig. 1.150.

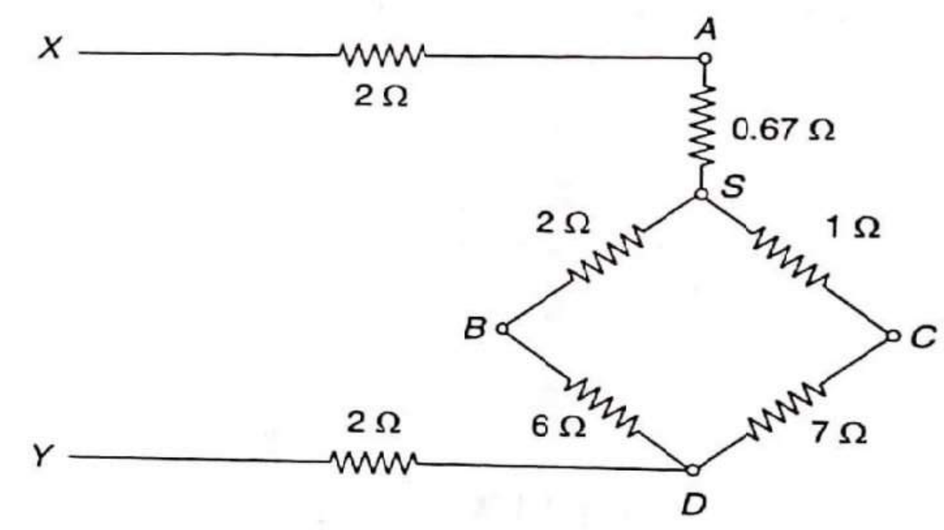

Fig. 1.150

In Fig. 1.150, resistors 6 Ω and 2 Ω are in series. Also resistors 1 Ω and 7 Ω are in series.

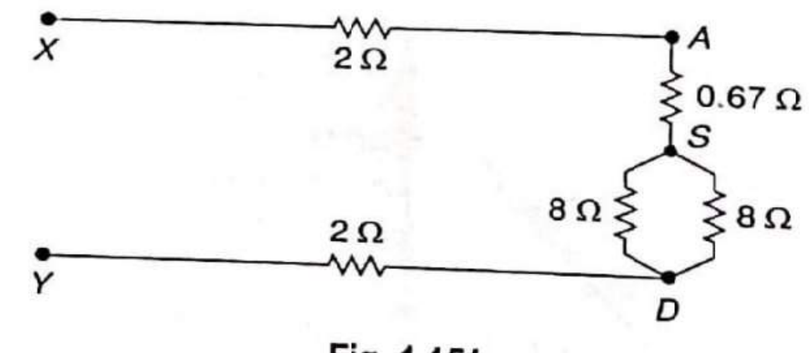

Fig. 1.151

In Fig. 1.151, two 8 Ω resistors are in parallel.

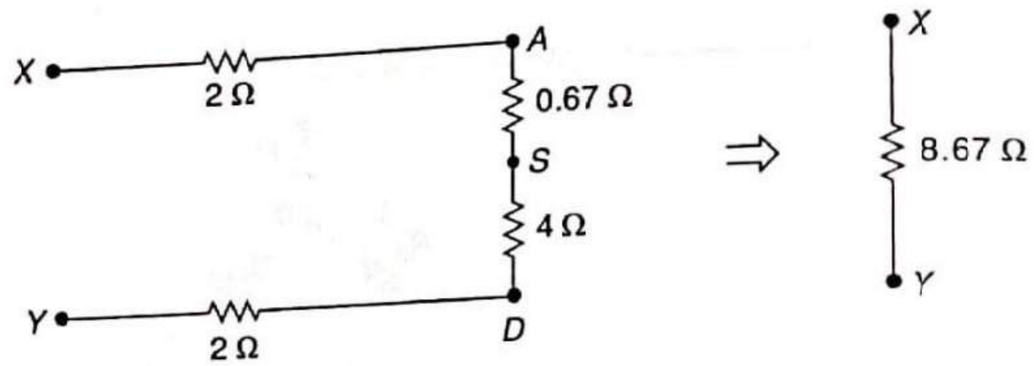

Fig. 1.152

Example 1.45 Find the equivalent resistance between the terminals A and B in the network shown in Fig. 1.153.

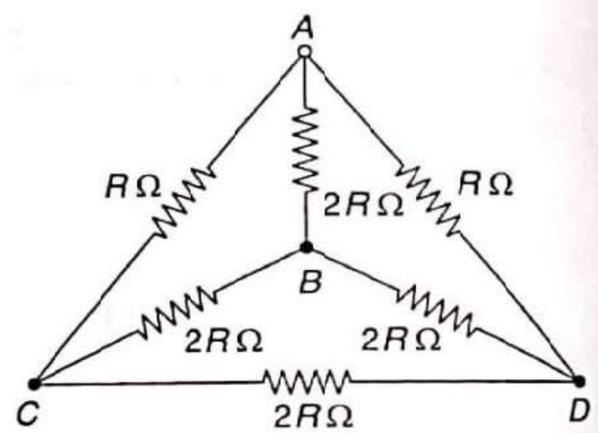

Fig. 1.153

Solution

Converting delta connection formed by three '$2R$' Ω resistors into equivalent star network, i.e., $\Delta\ CBD \Rightarrow Y\ CBD$, we get the network as shown in Fig. 1.154.

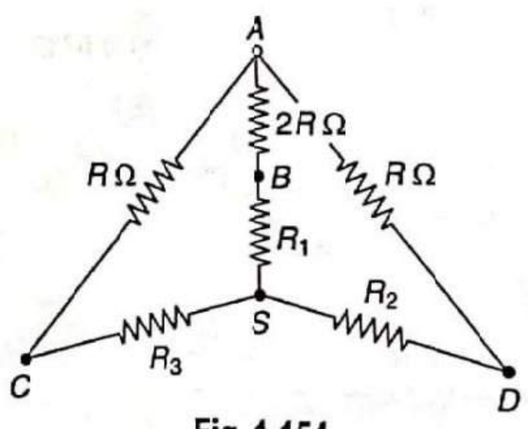

Fig. 1.154

We have $R_1 = R_2 = R_3 = \dfrac{2R \times 2R}{2R + 2R + 2R} = \dfrac{2}{3}R$

The simplified network is shown in Fig. 1.155.

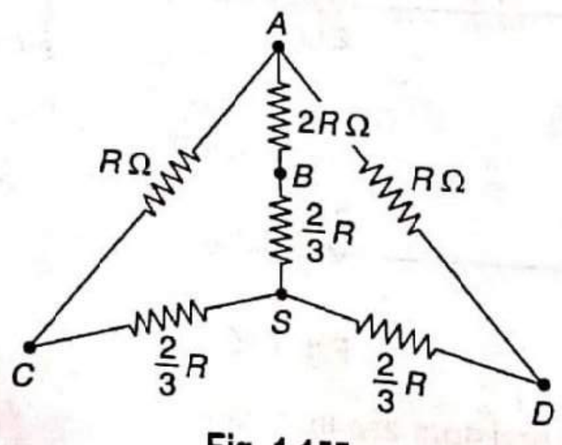

Fig. 1.155

In branch ACS, $R\,\Omega$ and $\frac{2}{3}R\,\Omega$ are in series. Also in branch ADS, $R\,\Omega$ and $\frac{2}{3}R\,\Omega$ resistors are in series.

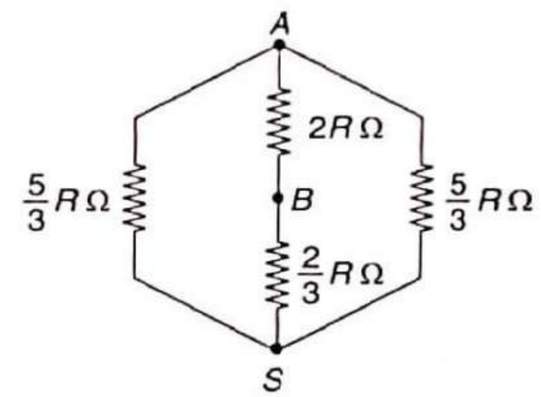

Fig. 1.156

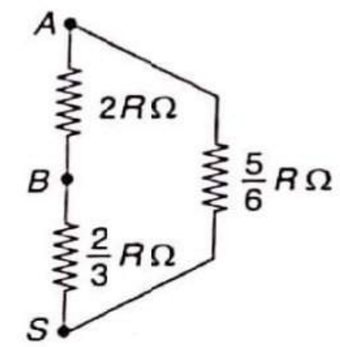

Fig. 1.157

In Fig. 1.156, two $\frac{5}{3}R\,\Omega$ resistors are in parallel.

In Fig. 1.157, resistors $\frac{2}{3}R\,\Omega$ and $\frac{5}{6}R\,\Omega$ are in series.

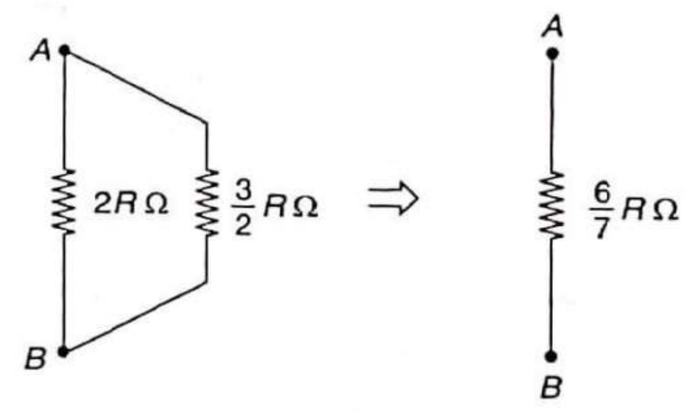

Fig. 1.158

Example 1.46 Find the current I in the network shown in Fig. 1.159.

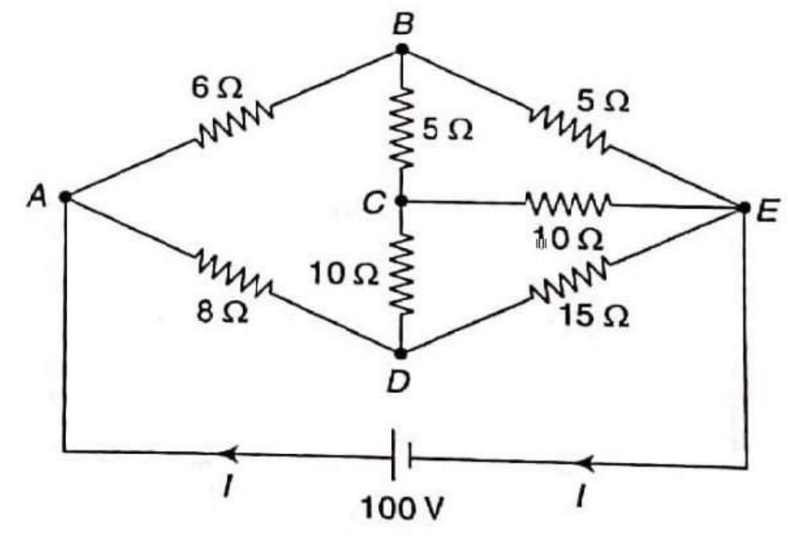

Fig. 1.159

Solution

Converting star connection formed by 5 Ω and two 10 Ω resistors into equivalent delta network, i.e., $Y\ BED \Rightarrow \Delta\ BED$, we get the network as shown in Fig. 1.160.

$$R_x = 5 + 10 + \frac{5\times10}{10} = 20\ \Omega,$$

$$R_y = 10 + 10 + \frac{10\times10}{5} = 40\ \Omega,$$

$$R_z = 5 + 10 + \frac{5\times10}{10} = 20\ \Omega$$

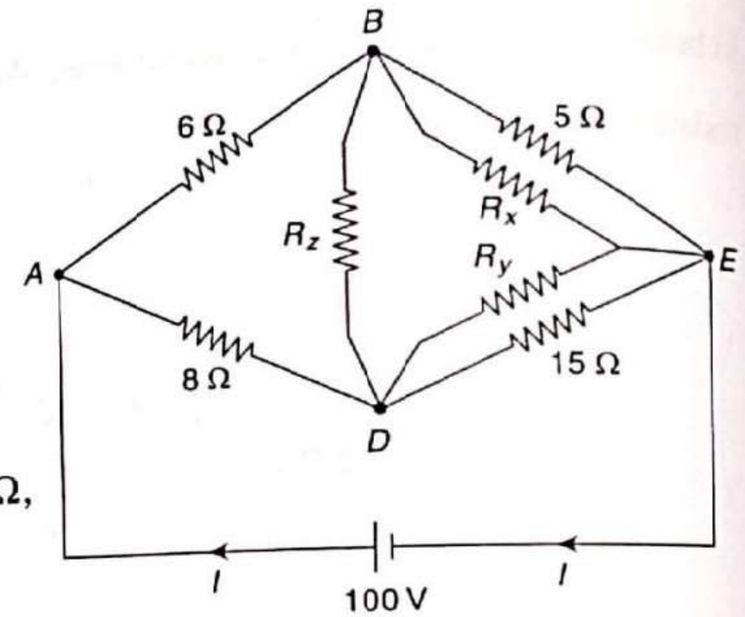

Fig. 1.160

The simplified network is shown in Fig. 1.161.

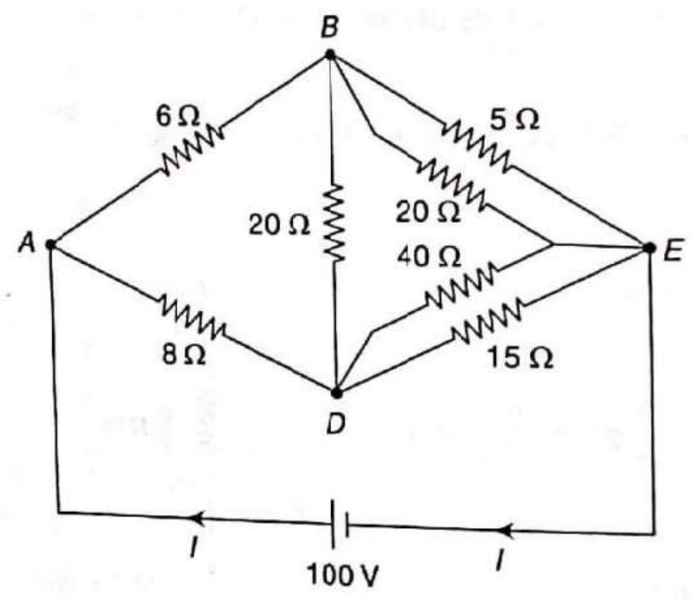

Fig. 1.161

In Fig. 1.161, resistors 20 Ω and 5 Ω are in parallel. Also resistors 40 Ω and 15 Ω are in parallel.

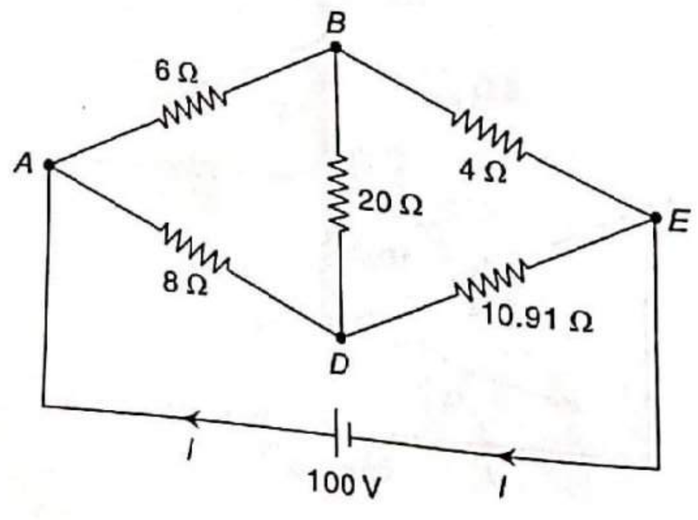

Fig. 1.162

Converting the delta connection formed by 6 Ω, 20 Ω, and 8 Ω resistors into equivalent star network, i.e., $\Delta\ ABD \Rightarrow Y\ ABD$, we get the following network:

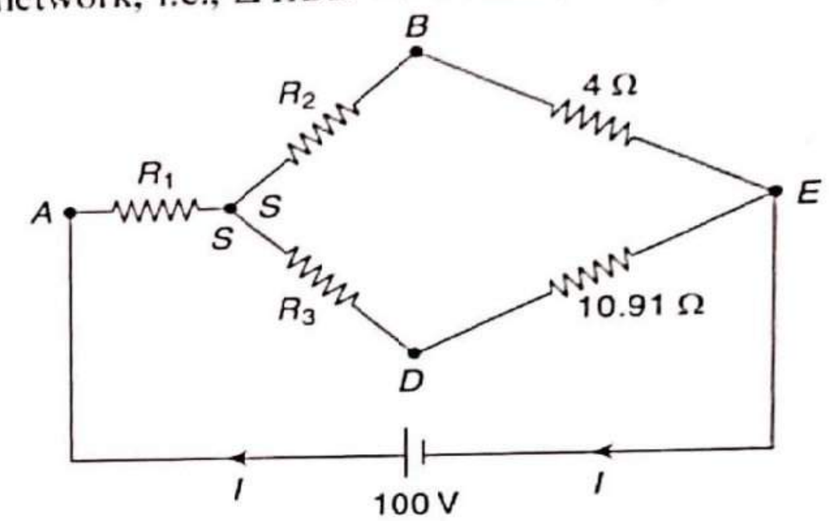

Fig. 1.163

We have

$$R_1 = \frac{6\times8}{6+20+8} = 1.41\ \Omega,$$

$$R_2 = \frac{6\times20}{6+20+8} = 3.53\ \Omega,$$

$$R_3 = \frac{20\times8}{6+20+8} = 4.71\ \Omega$$

The simplified network is shown in Fig. 1.164.

In Fig. 1.164, resistors 3.53 Ω and 4 Ω are in series. Also resistors 4.71 Ω and 10.91 Ω are in series.

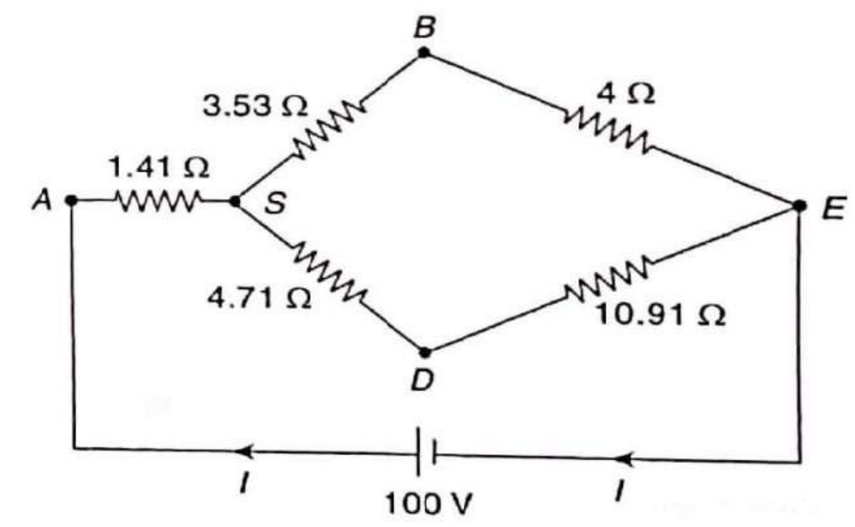

Fig. 1.164

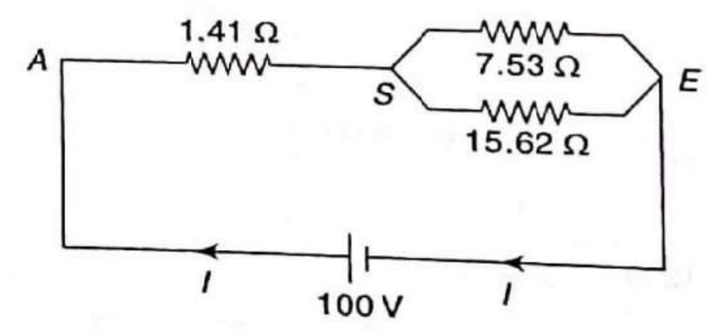

Fig. 1.165

In Fig. 1.165, resistors 7.53 Ω and 15.62 Ω are in parallel.

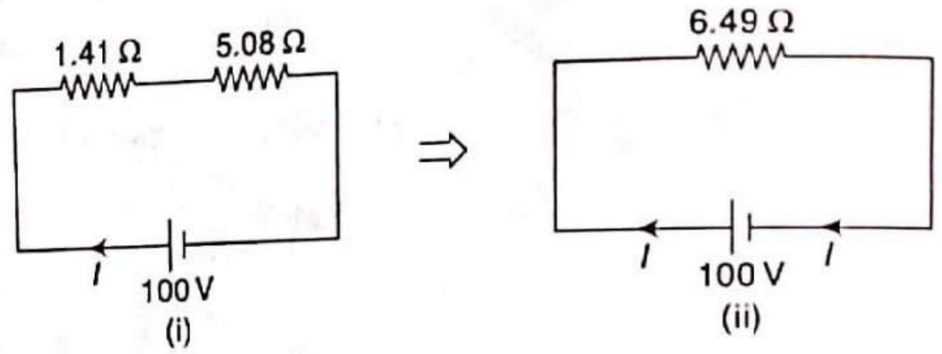

Fig. 1.166

By Ohm's law,

$$I = \frac{100}{6.49} = 15.41 \text{ A}$$

Example 1.47 Find the equivalent resistance between the terminals X and Y in the network shown in Fig. 1.167.

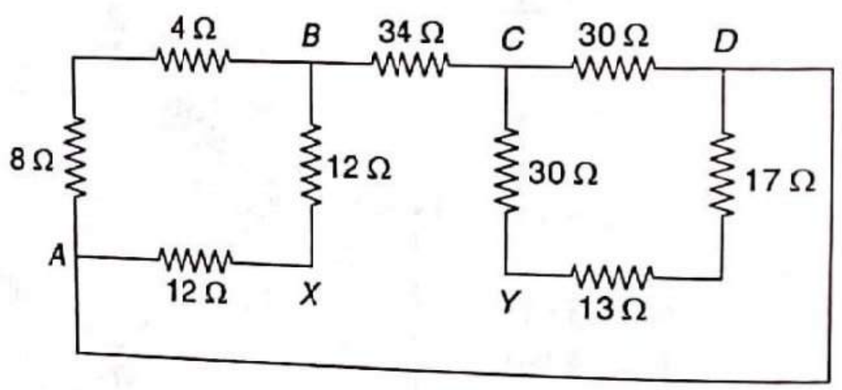

Fig. 1.167

Solution

In Fig. 1.167, resistors 8 Ω and 4 Ω are in series. Also resistors 17 Ω and 13 Ω are in series.

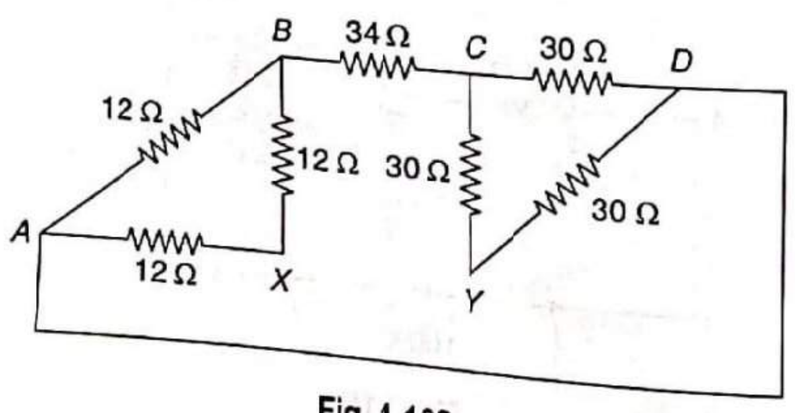

Fig. 1.168

Converting the delta connections formed by three 12 Ω resistors (ΔABX) and three 30 Ω resistors (ΔCDY) into equivalent star connections, i.e., $\Delta ABX \Rightarrow YABX$ and $\Delta CDY \Rightarrow YCDY$, we get the following network:

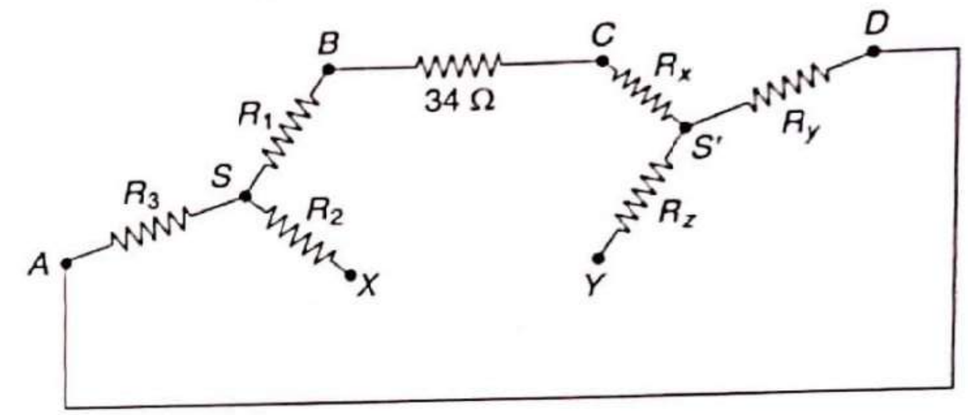

Fig. 1.169

$$R_1 = R_2 = R_3 = \frac{12 \times 12}{12 + 12 + 12} = 4\ \Omega$$

$$R_x = R_y = R_z = \frac{30 \times 30}{30 + 30 + 30} = 10\ \Omega$$

The simplified network is shown in Fig. 1.170.

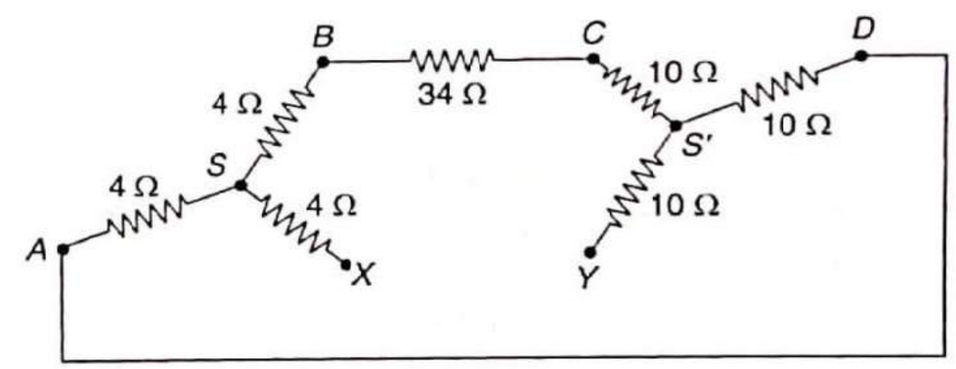

Fig. 1.170

In branch $SBCS'$, 4 Ω, 34 Ω, and 10 Ω are in series. Also in branch $SADS'$, 4 Ω and 10 Ω are in series.

In Fig. 1.171, 48 Ω and 14 Ω are in parallel.

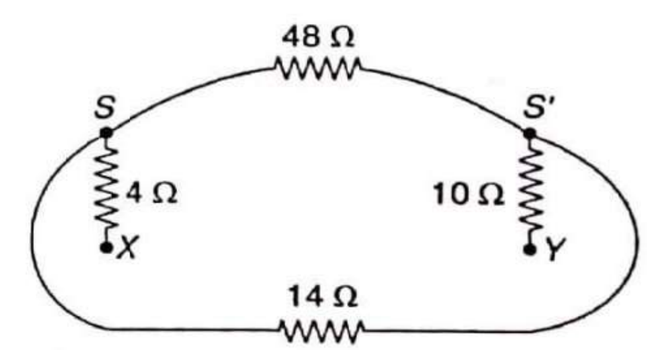

Fig. 1.171

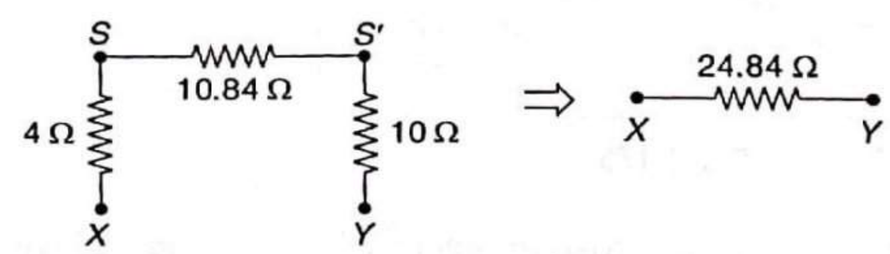

Fig. 1.172

Example 1.48 Find the equivalent resistance between the terminals A and B in the network shown in Fig. 1.173.

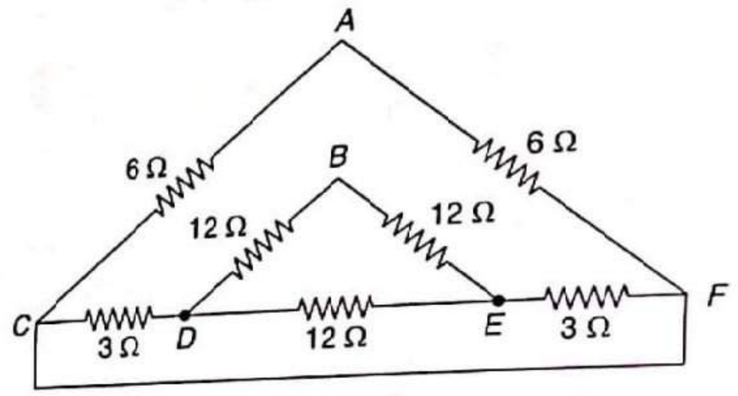

Fig. 1.173

Solution

Converting the delta connection formed by three 12 Ω resistors ($\Delta\ BDE$) into equivalent star connection, i.e., $\Delta\ BDE \Rightarrow YBDE$, we get the network as shown in Fig. 1.174.

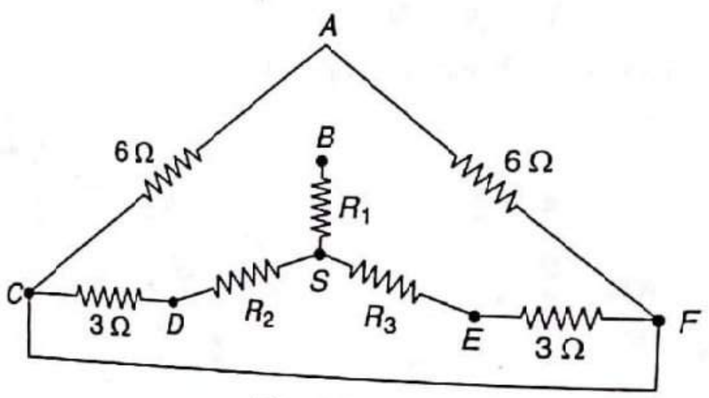

Fig. 1.174

$$R_1 = R_2 = R_3 = \frac{12 \times 12}{12+12+12} = 4\ \Omega$$

The simplified network is shown in Fig. 1.175.

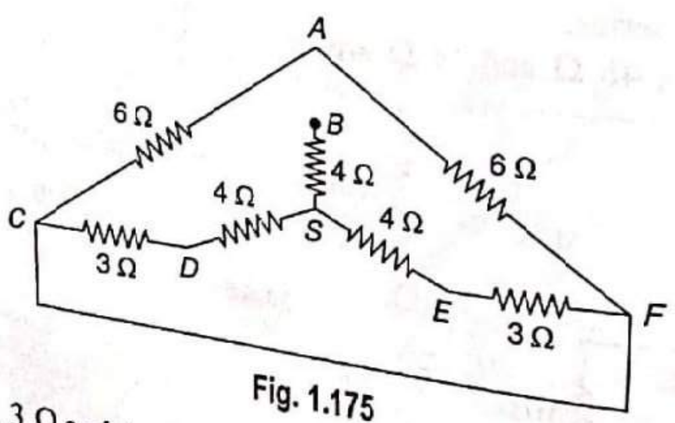

Fig. 1.175

In branch CDS, 3 Ω and 4 Ω are in series. Also in branch SEF, 4 Ω and 3 Ω are in series.

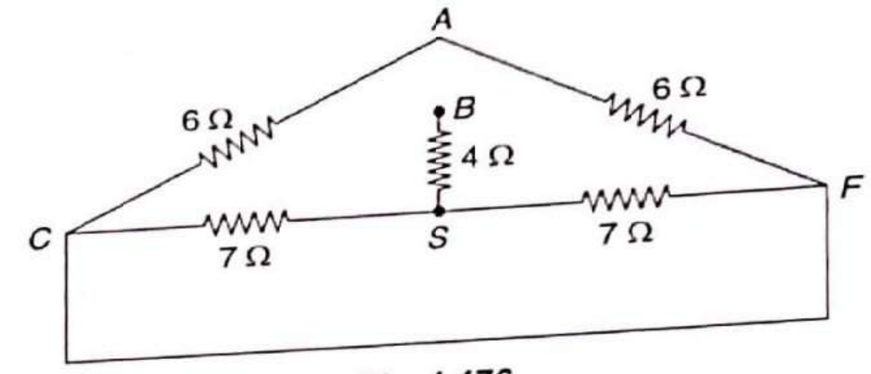

Fig. 1.176

In Fig. 1.176, the nodes C and F are same, and by joining them, the circuit simplifies as shown in Fig. 1.177.

In Fig. 1.177, two 7 Ω resistors are in parallel and two 6 Ω resistors are in parallel.

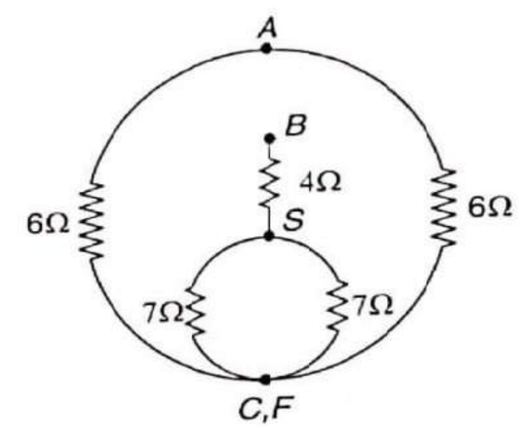

Fig. 1.177

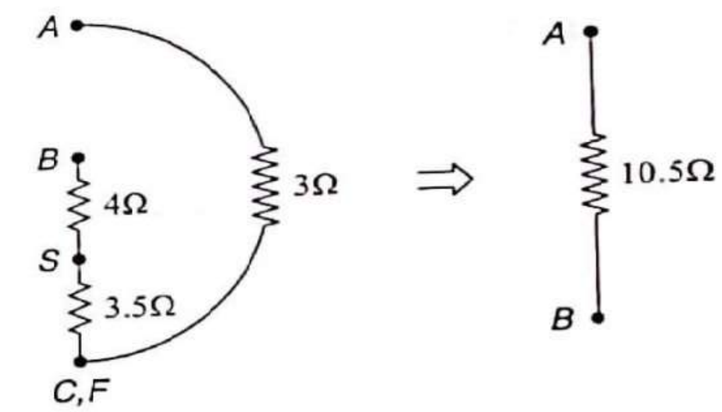

Fig. 1.178

Example 1.49 Find the equivalent resistance between the terminals A and B in the network shown in Fig. 1.179.

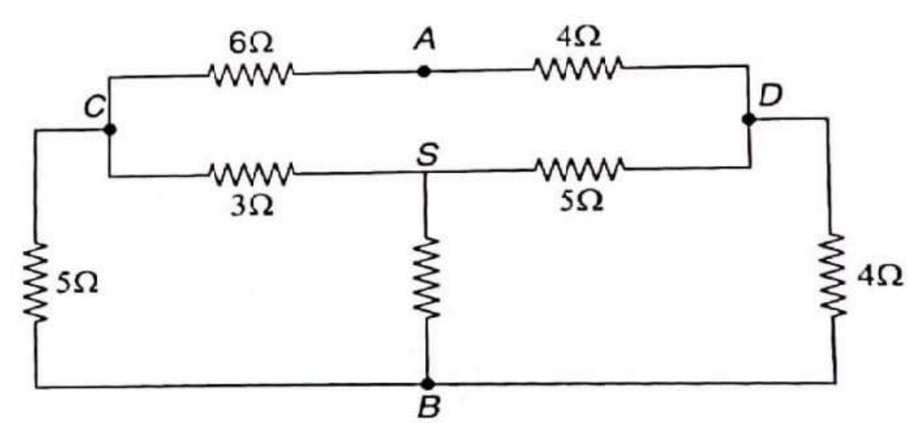

Fig. 1.179

Solution

Converting the star connection formed by 3 Ω, 5 Ω, and 2 Ω resistors ($Y\ CDB$) into equivalent delta connection, i.e., $Y\ CDB \Rightarrow \Delta\ CDB$, we get the circuit as shown in Fig. 1.180.

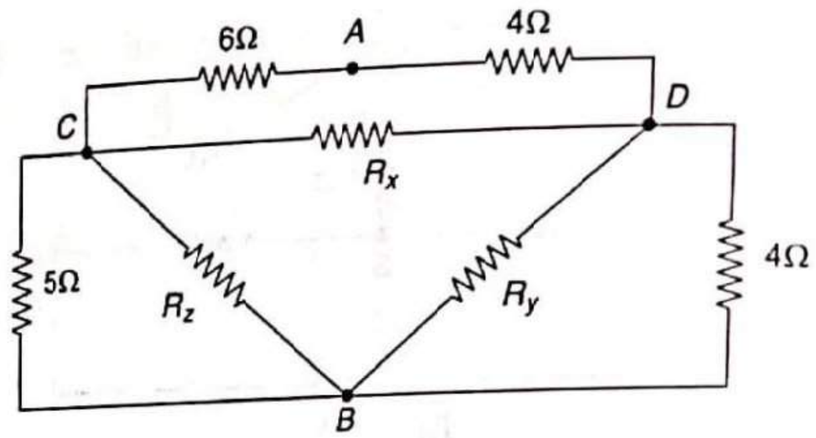

Fig. 1.180

$$R_x = 3 + 5 + \frac{3 \times 5}{2} = 15.5\ \Omega, \qquad R_y = 5 + 2 + \frac{5 \times 2}{3} = 10.33\ \Omega,$$

$$R_z = 2 + 3 + \frac{2 \times 3}{5} = 6.2\ \Omega$$

The simplified network is shown in Fig. 1.181.

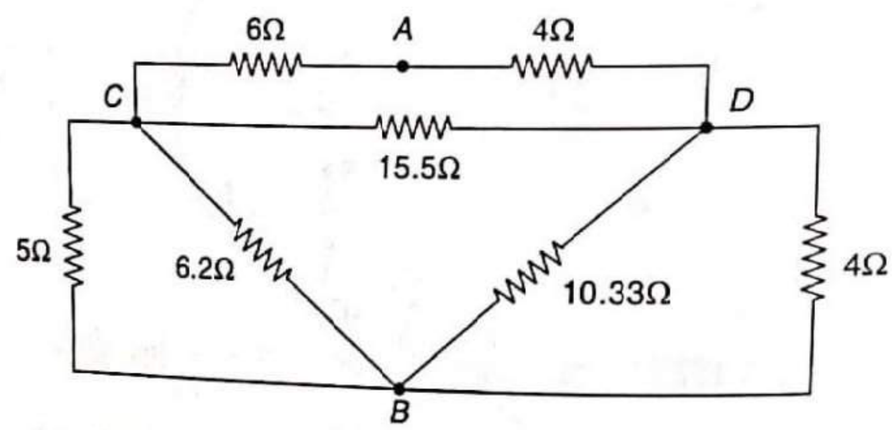

Fig. 1.181

In Fig. 1.181, 5 Ω and 6.2 Ω are in parallel. Also 10.33 Ω and 4 Ω are in parallel.

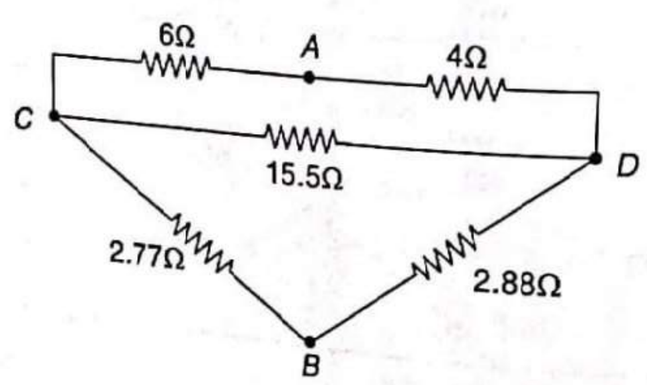

Fig. 1.182

Converting delta connection formed by 6 Ω, 4 Ω and 15.5 Ω resistors (Δ *ACD*) into equivalent star connection, i.e., Δ *ACD* ⇒ *Y ACD*, we get the network as shown in Fig. 1.183.

$$R_1 = \frac{6 \times 4}{6 + 4 + 15.5} = 0.94\ \Omega, \qquad R_2 = \frac{4 \times 15.5}{6 + 4 + 15.5} = 2.43\ \Omega,$$

$$R_3 = \frac{15.5 \times 6}{6 + 4 + 15.5} = 3.65\ \Omega$$

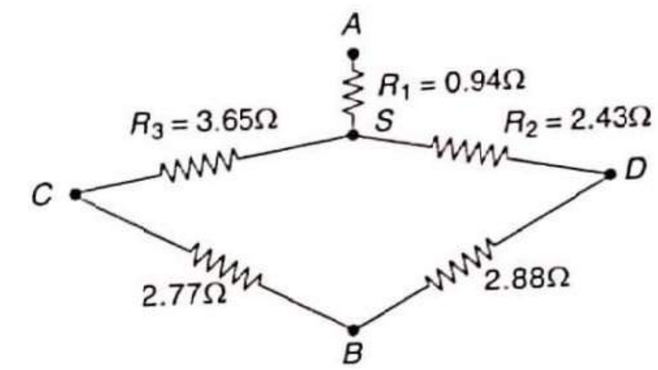

Fig. 1.183

In Fig. 1.183, 3.65 Ω and 2.77 Ω are in series. Also 2.43 Ω and 2.88 Ω are in series.

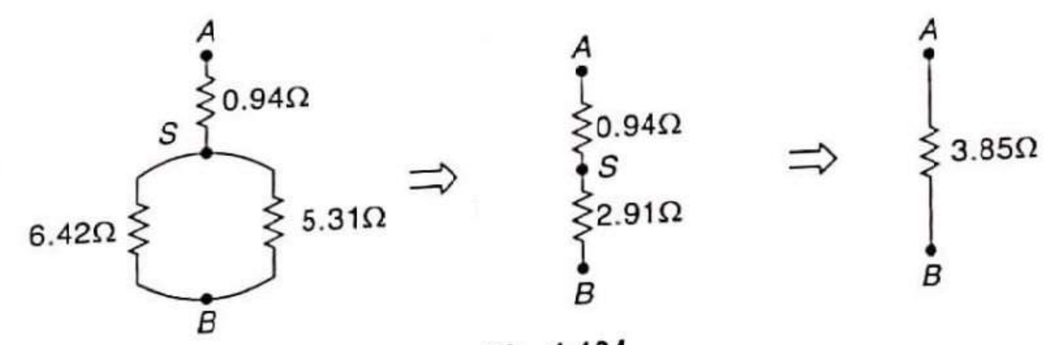

Fig. 1.184

1.14 Maxwell's Mesh Current Method

In this method, Kirchhoff's voltage law is applied to each mesh in terms of mesh currents instead of branch currents. Each mesh is assigned a separate mesh current. This mesh current is assumed to flow in clockwise direction around the perimeter of the mesh without splitting at a junction into branch currents. Kirchhoff's voltage law is applied to write equation in terms of unknown mesh currents. Once the mesh currents are known, the branch currents can be easily determined.

Maxwell's mesh current method consists of the following steps:

(i) Each mesh is assigned a separate mesh current. For convenience, all mesh currents are assumed to flow in clockwise direction.[1] For example, in Fig. 1.185, meshes *ABDA* and *BCDB* have been assigned mesh currents I_1 and I_2 respectively.

(ii) If two mesh currents are flowing through a circuit element, the actual current in the circuit element is the algebraic sum of two. Thus, in Fig. 1.185,

[1]It is convenient to consider all mesh currents in one direction (clockwise or anticlockwise). The same result will be obtained if mesh currents are given arbitrary directions.

there are two mesh currents I_1 and I_2 flowing in R_2. If we go from B to D, current is $I_1 - I_2$ and if we go in the other direction (i.e. from D to B), current is $I_2 - I_1$.

(iii) Kirchhoff's voltage law is applied to write equation for each mesh in terms of unknown mesh currents.

(iv) If the value of any mesh current comes out to be negative in the solution, it means that true direction of that mesh current is anticlockwise, i.e., opposite to the assumed clockwise direction.

Consider a circuit as shown in Fig. 1.185.

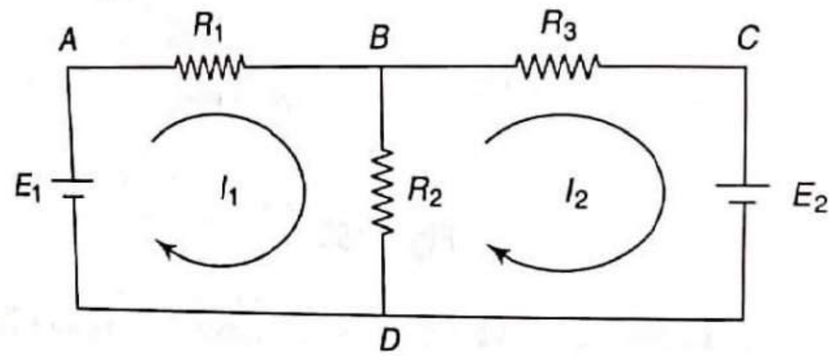

Fig. 1.185 Mesh current method

Applying Kirchhoff's voltage law to mesh $ABDA$,

$$-I_1R_1 - (I_1 - I_2)R_2 + E_1 = 0$$

or $$I_1(R_1 + R_2) - I_2R_2 = E_1 \quad (1.21)$$

Applying Kirchhoff's voltage law to mesh $BCDB$,

$$-I_2R_3 - E_2 - (I_2 - I_1)R_2 = 0$$

or $$-I_1R_2 + (R_2 + R_3)I_2 = -E_2 \quad (1.22)$$

Solving Eqs (1.21) and (1.22) simultaneously, mesh currents I_1 and I_2 can be calculated. Once the mesh currents are known, the branch current can be readily obtained.

Note: Branch currents are the real currents because they actually flow in the branches and can be measured. However, mesh currents are fictitious quantities and can not be measured directly. Hence, mesh current is concept rather than a reality.

Example 1.50 With the help of mesh current method, find the magnitude and direction of the current flowing through the 1 Ω resistor in the network of Fig. 1.186.

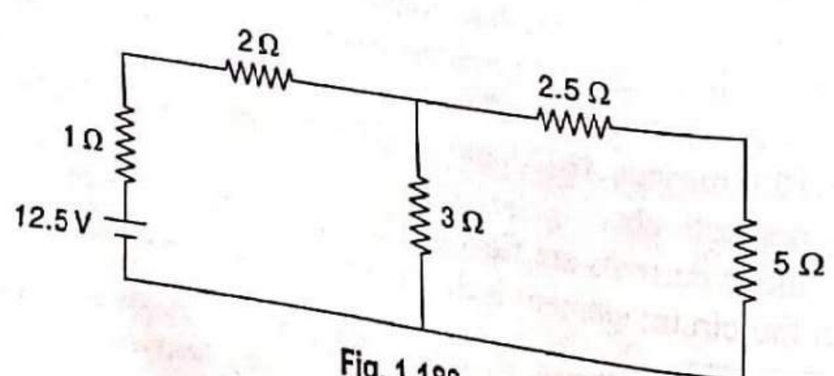

Fig. 1.186

Solution

Marking the different nodes and assigning the separate mesh current for each mesh, we have

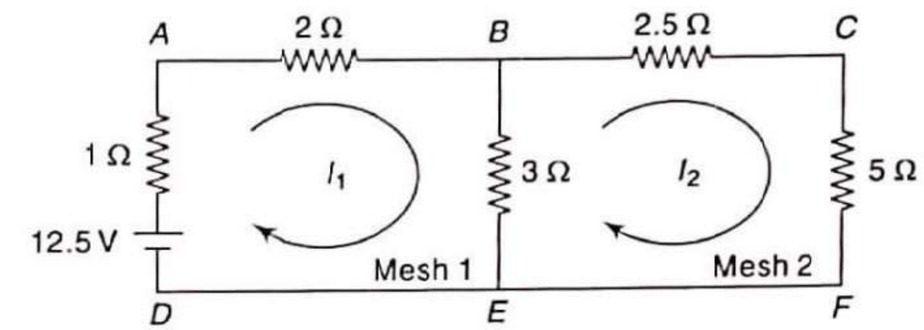

Fig. 1.187

Applying KVL to mesh 1,

$$-2I_1 - 3(I_1 - I_2) + 12.5 - I_1 = 0$$

or $$-6I_1 + 3I_2 = -12.5 \quad \text{(i)}$$

Applying KVL to mesh 2,

$$-2.5I_2 - 5I_2 - 3(I_2 - I_1) = 0$$

or $$3I_1 - 10.5I_2 = 0 \quad \text{(ii)}$$

From Eqs (i) and (ii), we get

$$I_1 = 2.43 \text{ A}$$

Hence, $I_{1\Omega} = 2.43 \text{ A}(\uparrow)$

Example 1.51 By mesh analysis, find mesh currents I_1, I_2, and I_3 in the network of Fig. 1.188.

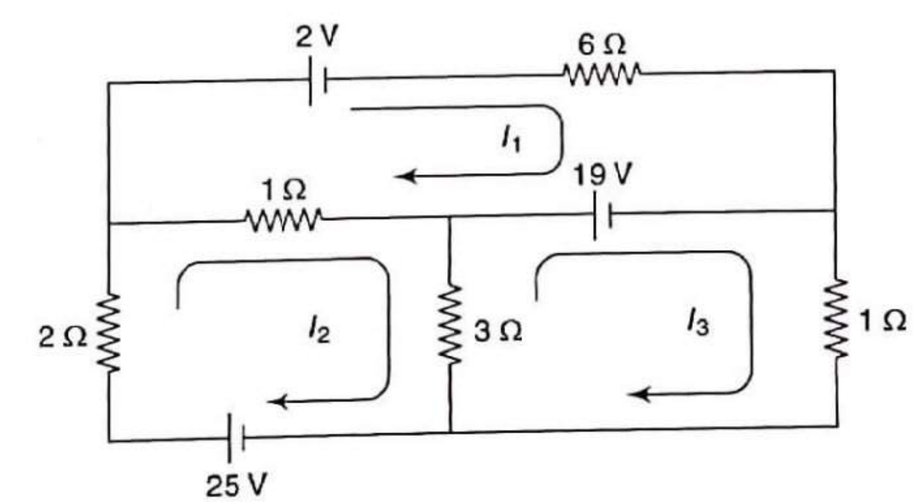

Fig. 1.188

Solution

Marking the different nodes, we get the circuit as shown in Fig. 1.189.

Applying KVL to mesh $ABEDCA$,

$$-2 - 6I_1 + 19 - 1(I_1 - I_2) = 0$$

or $$7I_1 - I_2 = 17 \quad \text{(i)}$$

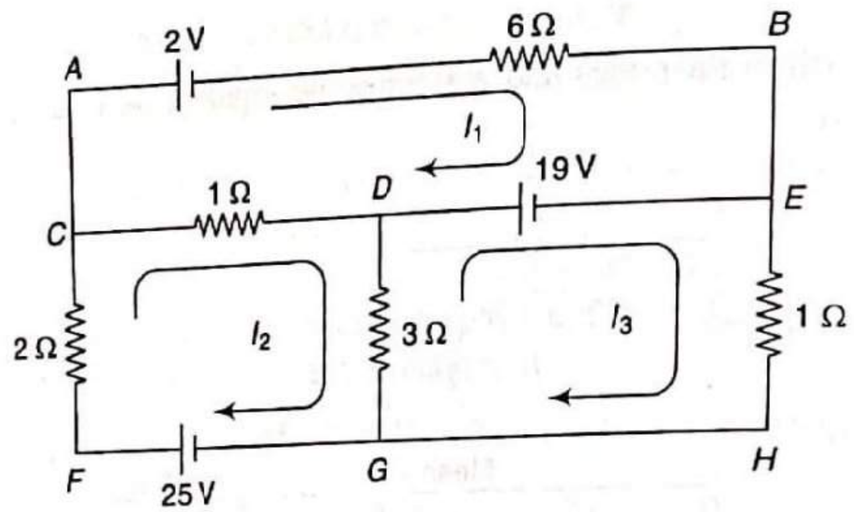

Fig. 1.189

Applying KVL to mesh *CDGFC*,

$$-(I_2 - I_1) - 3(I_2 - I_3) + 25 - 2I_2 = 0$$

or $\quad I_1 - 6I_2 + 3I_3 = -25 \qquad$ (ii)

Applying KVL to mesh *DEHGD*,

$$-19 - I_3 - 3(I_3 - I_2) = 0$$

or $\quad 3I_2 - 4I_3 = 19 \qquad$ (iii)

The values of I_1, I_2, and I_3 may be found by solving the above three simultaneous equations or by the method of determinants as given below:

Putting the above three equations in matrix form, we have

$$\begin{bmatrix} 7 & -1 & 0 \\ 1 & -6 & 3 \\ 0 & 3 & -4 \end{bmatrix}\begin{bmatrix} I_1 \\ I_2 \\ I_3 \end{bmatrix} = \begin{bmatrix} 17 \\ -25 \\ 19 \end{bmatrix}$$

$$\Delta = \begin{vmatrix} 7 & -1 & 0 \\ 1 & -6 & 3 \\ 0 & 3 & -4 \end{vmatrix} = 101, \qquad \Delta_1 = \begin{vmatrix} 17 & -1 & 0 \\ -25 & -6 & 3 \\ 19 & 3 & -4 \end{vmatrix} = 298$$

$$\Delta_2 = \begin{vmatrix} 7 & 17 & 0 \\ 1 & -25 & 3 \\ 0 & 19 & -4 \end{vmatrix} = 369, \qquad \Delta_3 = \begin{vmatrix} 7 & -1 & 17 \\ 1 & -6 & -25 \\ 0 & 3 & 19 \end{vmatrix} = -203$$

By Cramer's rule,

$$I_1 = \frac{\Delta_1}{\Delta} = \frac{298}{101} = 2.95 \text{ A}, \qquad I_2 = \frac{\Delta_2}{\Delta} = \frac{369}{101} = 3.65 \text{ A},$$

$$I_3 = \frac{\Delta_3}{\Delta} = \frac{-203}{101} = -2.01 \text{ A}$$

Example 1.52 By mesh analysis, find the unknown emf V in the network of Fig. 1.190, which causes the mesh current I_1 to be zero.

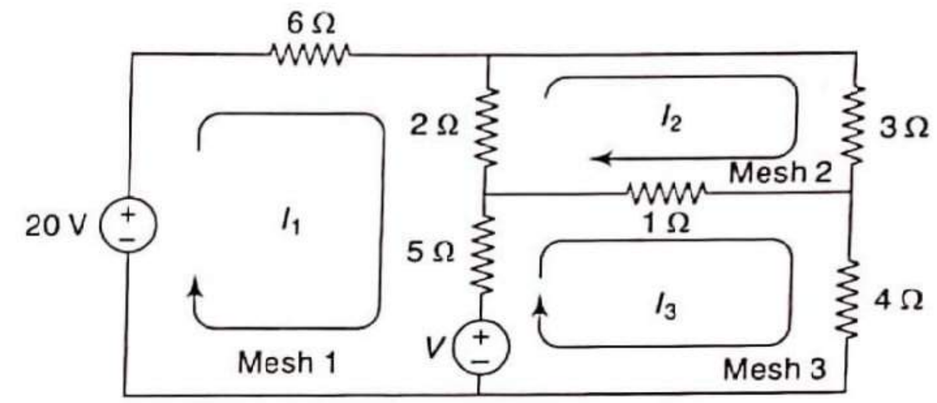

Fig. 1.190

Solution

Applying KVL to mesh 1,

$$-6I_1 - 2(I_1 - I_2) - 5(I_1 - I_3) - V + 20 = 0$$

or $\quad 13I_1 - 2I_2 - 5I_3 = 20 - V \qquad$ (i)

Applying KVL to mesh 2,

$$-3I_2 - (I_2 - I_3) - 2(I_2 - I_1) = 0$$

or $\quad 2I_1 - 6I_2 + I_3 = 0 \qquad$ (ii)

Applying KVL to mesh 3,

$$-(I_3 - I_2) - 4I_3 + V - 5(I_3 - I_1) = 0$$

or $\quad 5I_1 + I_2 - 10I_3 = -V \qquad$ (iii)

As mesh current I_1 is to be zero, i.e., by Cramer's rule, we have

$$\frac{\Delta_1}{\Delta} = 0 \quad \text{or} \quad \Delta_1 = 0$$

Hence $\quad \begin{vmatrix} 20 - V & -2 & -5 \\ 0 & -6 & 1 \\ -V & 1 & -10 \end{vmatrix} = 0$

or $\quad (20 - V)\{[(-6)(-10)] - [(1)(1)]\} - (-2)\{0 - (-V)\} + (-5)\{0 - [(-V)(-6)]\} = 0$

or $\quad V = 43.7 \text{ V}$

Example 1.53 By mesh analysis, find the current through 2 Ω resistor in the circuit of Fig. 1.191.

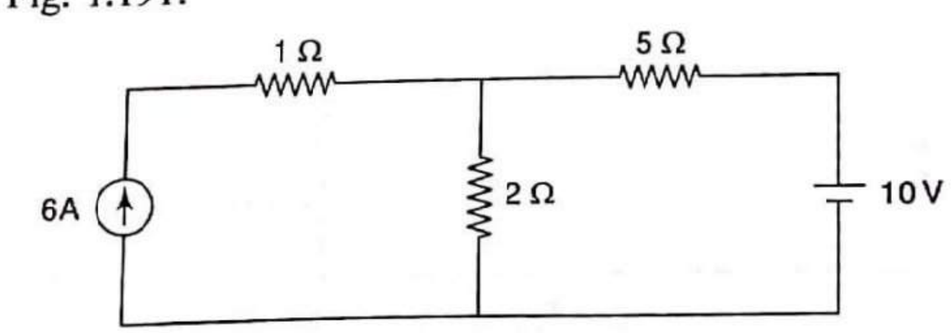

Fig. 1.191

Solution

Marking the different nodes and assigning the separate mesh current for each mesh, we get the following circuit:

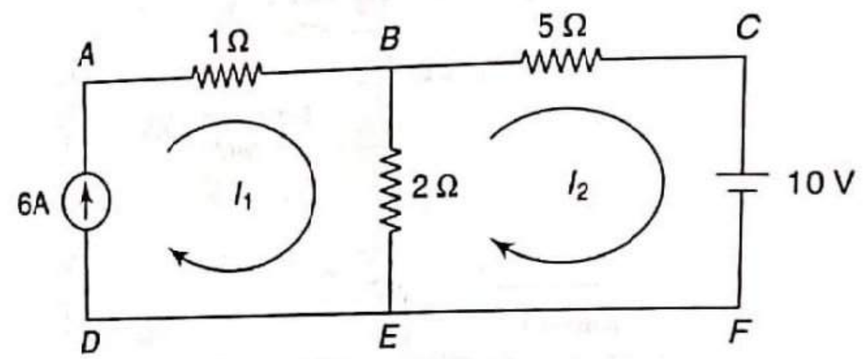

Fig. 1.192

In the circuit, current source is present in a branch not common to any other mesh. If their exists a current source in any mesh of a circuit, then Kirchhoff's voltage law can not be applied to such mesh as voltage drop across the current source is unknown. In Fig. 1.192, current source is present in a mesh *ABEDA*, so KVL can not be applied to this mesh.

In such case, to get the required equations, the current source is expressed in terms of mesh current, i.e., current source of 6 A in the direction of mesh current I_1. We can write the equation as

$$I_1 = 6 \qquad \text{(i)}$$

Then apply the KVL to the remaining meshes existing without involving the branches consisting of current source. In Fig. 1.192, mesh *BCFEB* does not contain any current source. So, applying the KVL to mesh *BCFEB*, we can write the equation as

$$-5I_2 - 10 - 2(I_2 - I_1) = 0$$

or $$2I_1 - 7I_2 = 10 \qquad \text{(ii)}$$

From Eqs (i) and (ii), we get

$$I_2 = 0.2857 \text{ A}$$

Hence, $I_{2\Omega} = (I_1 - I_2)(\downarrow) = 5.71 \text{ A}(\downarrow)$

Example 1.54 By mesh analysis, find the current through 100 Ω resistor in the circuit of Fig. 1.193.

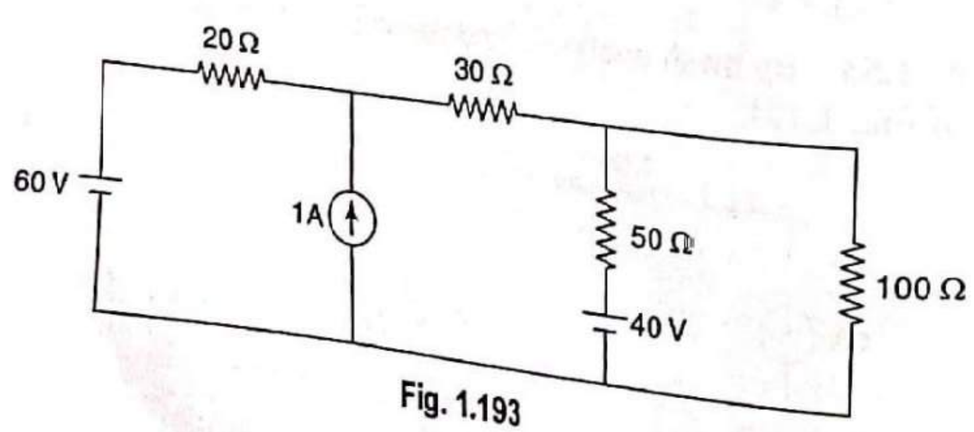

Fig. 1.193

Solution

Marking the different nodes and assigning the separate mesh current for each mesh, we get the following circuit:

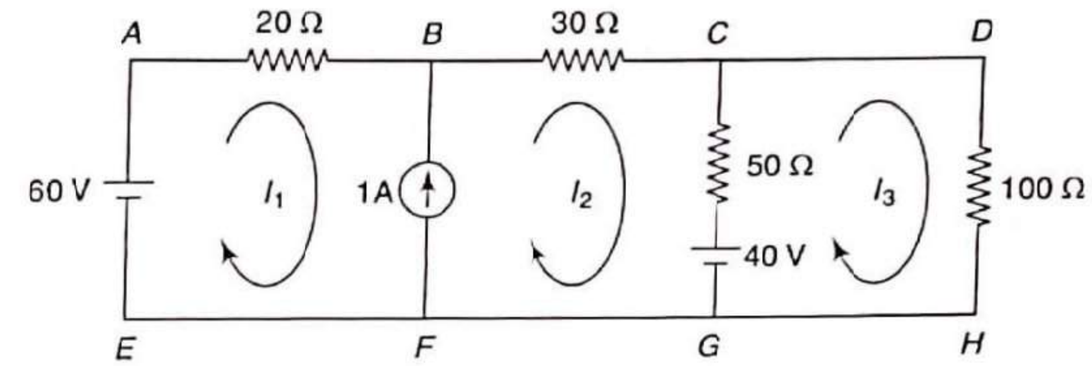

Fig. 1.194

In this example, current source of 1 A is present in a branch common to two meshes, i.e., mesh *ABFEA* and mesh *BCGFB*. When current source is present in a branch common to any two meshes, we need some manipulation and concept of supermesh can be used to solve such problems.

Supermesh is made out of two meshes. By opening the common branch in which current source is present (i.e., branch *BF*), we get the supermesh, i.e., supermesh *ABCGFEA*.

By marking the supermesh, we obtain Fig. 1.195.

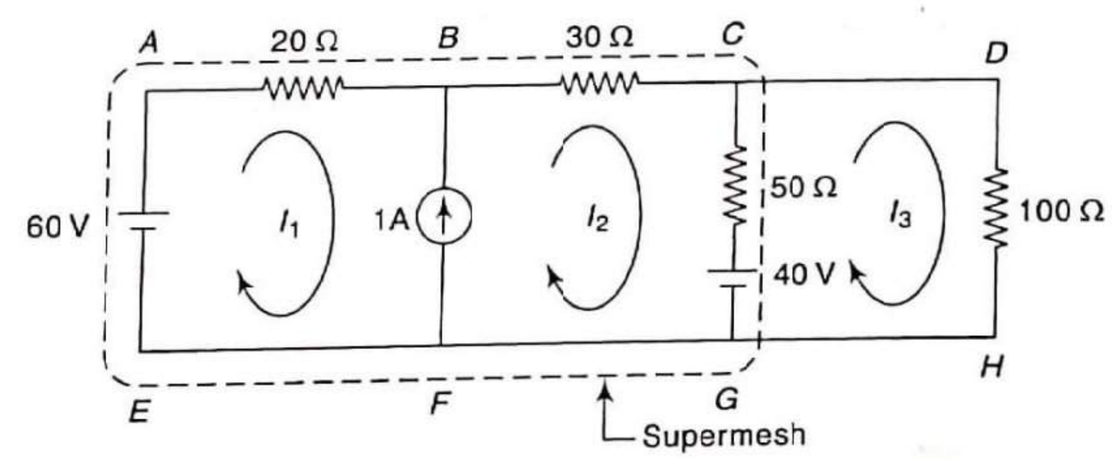

Fig. 1.195

In such a case, to get the required equations for the supermesh we can write the two equations, namely current equation and voltage equation. By expressing the current in the common branch in terms of mesh current, we get the current equation as

$$I_2 - I_1 = 1 \qquad \text{(i)}$$

By applying the KVL to supermesh *ABCGFEA*, we get the voltage equation as

$$-20I_1 - 30I_2 - 50(I_2 - I_3) - 40 + 60 = 0$$

or $$-20I_1 - 80I_2 + 50I_3 = -20 \qquad \text{(ii)}$$

Now, by applying the KVL to the remaining mesh *CDHGC* (which does not contain any current source), we have

$$-50(I_3 - I_2) - 100I_3 + 40 = 0$$

or $$50I_2 - 150I_3 = -40 \qquad \text{(iii)}$$

From Eqs (i), (ii), and (iii), we get

$$I_3 = 0.48 \text{ A}$$

Hence, $I_{100\Omega} = 0.48 \text{ A } (\downarrow)$

Example 1.55 By mesh analysis, find the current through 5 Ω resistor in the circuit of Fig. 1.196.

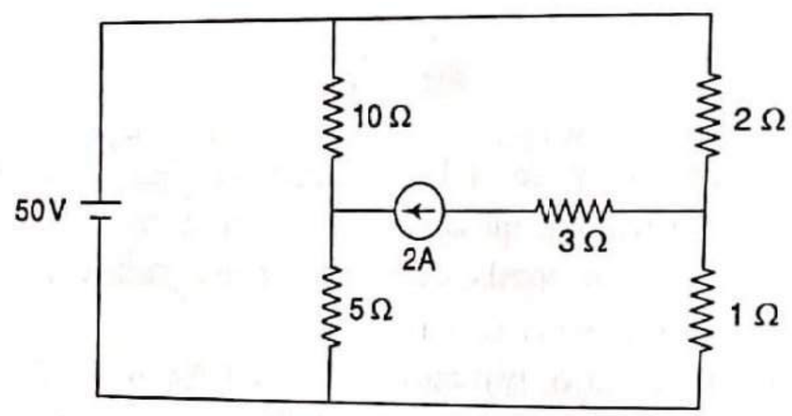

Fig. 1.196

Solution

Assigning the separate mesh current for each mesh, we obtain Fig. 1.197.

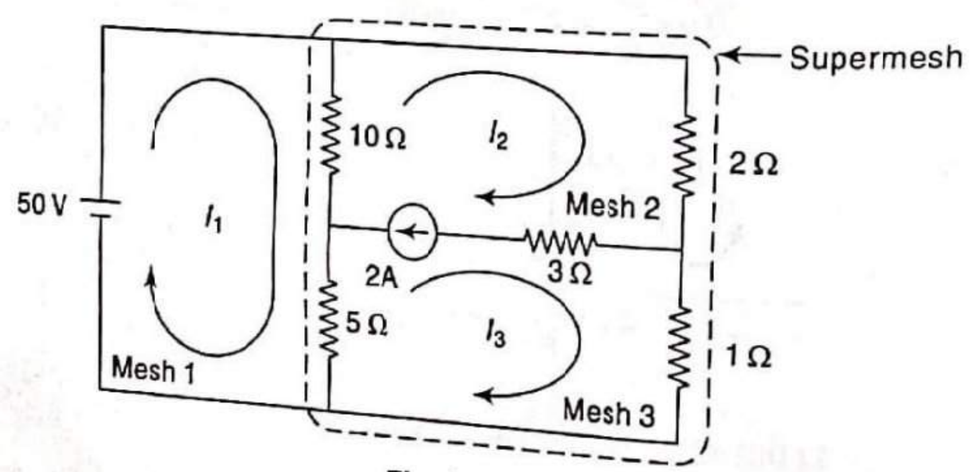

Fig. 1.197

Mesh 2 and mesh 3 form a supermesh.

By expressing the current in the common branch in terms of mesh currents, we get the current equation as

$$(I_2 - I_3) = 2 \qquad \text{(i)}$$

By applying the KVL to the supermesh, we get the voltage equation as

$$-2I_2 - I_3 - 5(I_3 - I_1) - 10(I_2 - I_1) = 0$$

or $$15I_1 - 12I_2 - 6I_3 = 0 \qquad \text{(ii)}$$

Now, by applying the KVL to mesh 1 (which does not contain any current source), we have

$$-10(I_1 - I_2) - 5(I_1 - I_3) + 50 = 0$$

or $$-15I_1 + 10I_2 + 5I_3 = -50 \qquad \text{(iii)}$$

The values of I_1 and I_3 may be found by solving the above three simultaneous equations or by the method of determinants as given below:

Putting the above three equations in matrix form, we have

$$\begin{bmatrix} 0 & 1 & -1 \\ 15 & -12 & -6 \\ -15 & 10 & 5 \end{bmatrix} \begin{bmatrix} I_1 \\ I_2 \\ I_3 \end{bmatrix} = \begin{bmatrix} 2 \\ 0 \\ -50 \end{bmatrix}$$

$$\Delta = \begin{vmatrix} 0 & 1 & -1 \\ 15 & -12 & -6 \\ -15 & 10 & 5 \end{vmatrix} = 45, \qquad \Delta_1 = \begin{vmatrix} 2 & 1 & -1 \\ 0 & -12 & -6 \\ -50 & 10 & 5 \end{vmatrix} = 900,$$

$$\Delta_3 = \begin{vmatrix} 0 & 1 & 2 \\ 15 & -12 & 0 \\ -15 & 10 & -50 \end{vmatrix} = 690$$

By Cramer's rule,

$$I_1 = \frac{\Delta_1}{\Delta} = \frac{900}{45} = 20 \text{ A}, \qquad I_3 = \frac{\Delta_3}{\Delta} = \frac{690}{45} = 5.33 \text{ A}$$

Hence, $I_{5\Omega} = (I_1 - I_3)\ (\downarrow) = 14.67 \text{ A } (\downarrow)$

1.15 Nodal Analysis (Node Voltage Method)

This method is based on Kirchhoff's current law (KCL). Normally, this analysis is carried out to determine voltages of different nodes with respective to reference node. However, after determination of node voltage, currents in all branches can be determined. This method is useful where number of loops is large and hence, mesh analysis becomes lengthy. Nodal analysis also has advantage that a minimum number of equations need to be written to determine the unknown quantities.

Following steps are to be taken while solving a problem by nodal analysis. Consider the circuit of Fig. 1.198.

Step I: Mark all nodes. Every junction of the network where three or more branches meet is regarded as a node. In a circuit of Fig. 1.198, there are four nodes (marked by bold points). But lower two nodes are same, and by joining them, we get only three nodes as shown in Fig. 1.199.

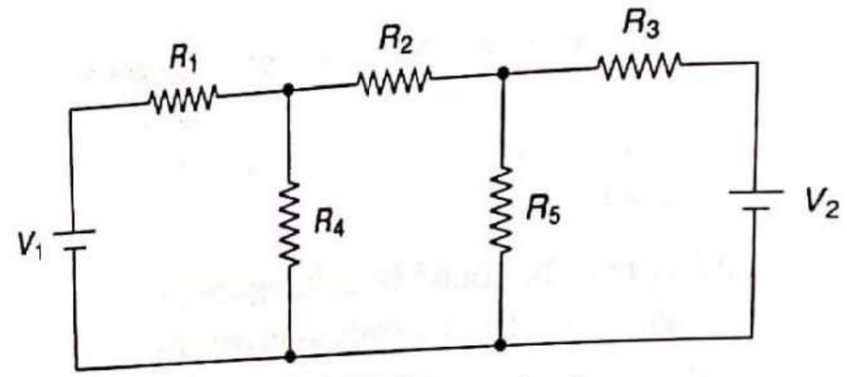

Fig. 1.198 Identification of nodes

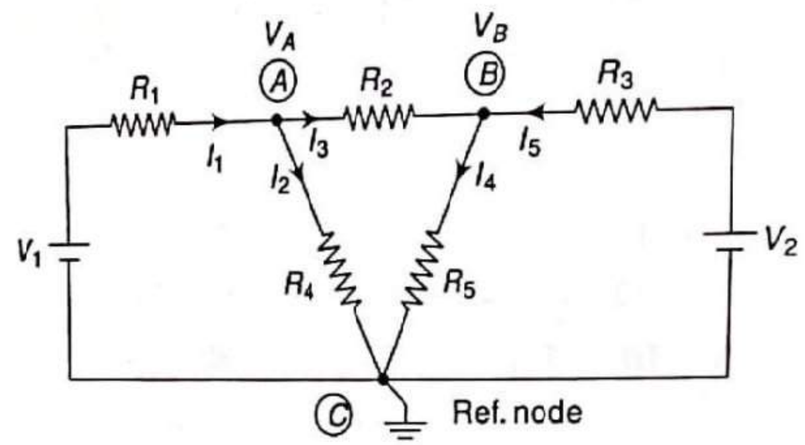

Fig. 1.199 Assigning the branch currents and unknown node voltages

Step II: Select one of the nodes as reference node. Normally, for convenience, choose that node as reference where maximum elements are connected or maximum branches are meeting. Obviously, node C is selected as reference node. Reference node is also called zero potential node or datum/ground node.

Step III: Assign the unknown potentials of all nodes with respect to the reference node. For example, at nodes A and B, let the potentials are V_A and V_B with respect to the reference node.

Step IV: At each node (excluding reference node), assume the unknown currents and mark their directions (choose the current directions arbitrarily).

Step V: Apply the KCL at each node and write the equations in terms of node voltages. By solving the equations, determine the node voltages. From node voltages, current in any branch can be determined.

Example 1.56 By node voltage method, find the current through 15 Ω resistor in the circuit of Fig. 1.200.

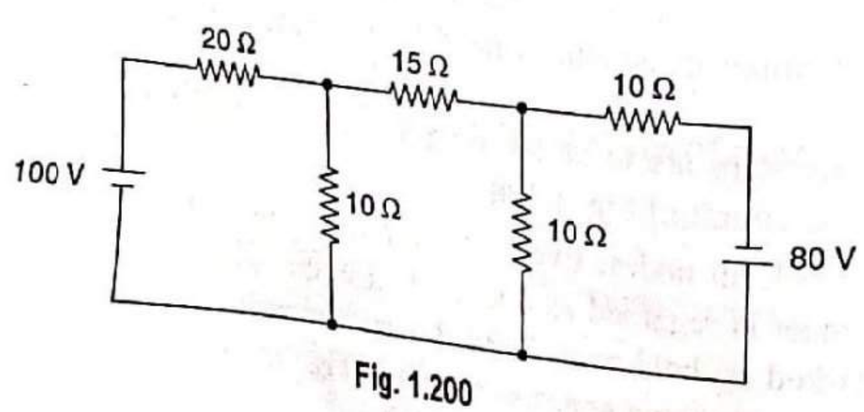

Fig. 1.200

Solution

Marking the different nodes and assigning the unknown currents, we obtain the following circuit:

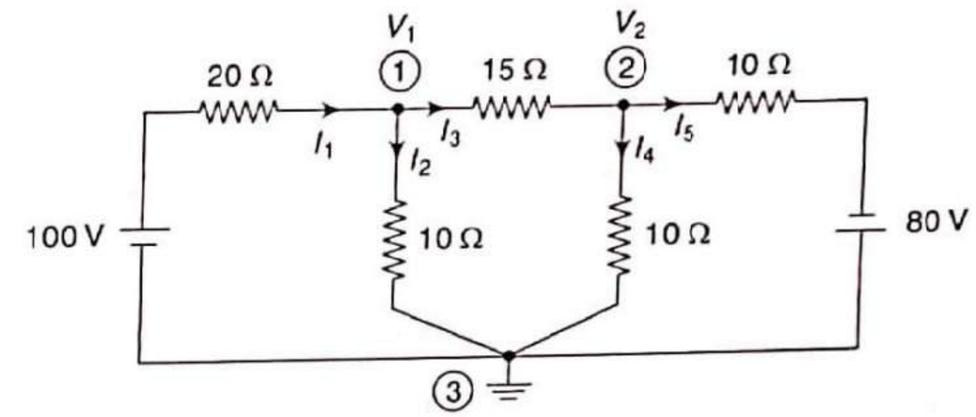

Fig. 1.201

Applying KCL at node 1,

$$I_1 = I_2 + I_3$$

or $$\frac{100 - V_1}{20} = \frac{V_1 - 0}{10} + \frac{V_1 - V_2}{15}$$

or $$13V_1 - 4V_2 = 300 \qquad \text{(i)}$$

Applying KCL at node 2,

$$I_3 = I_4 + I_5$$

or $$\frac{V_1 - V_2}{15} = \frac{V_2 - 0}{10} + \frac{V_2 - (-80)}{10}$$

or $$V_1 - 4V_2 = 120 \qquad \text{(ii)}$$

From Eqs (i) and (ii), $V_1 = 15$ V, $V_2 = -26.25$ V

Hence, $$I_{15\Omega} = I_3 = \frac{V_1 - V_2}{15} = 2.75 \text{ A } (\rightarrow)$$

Example 1.57 By node voltage method, find the currents I_1, I_2, and I_3 in the circuit of Fig. 1.202.

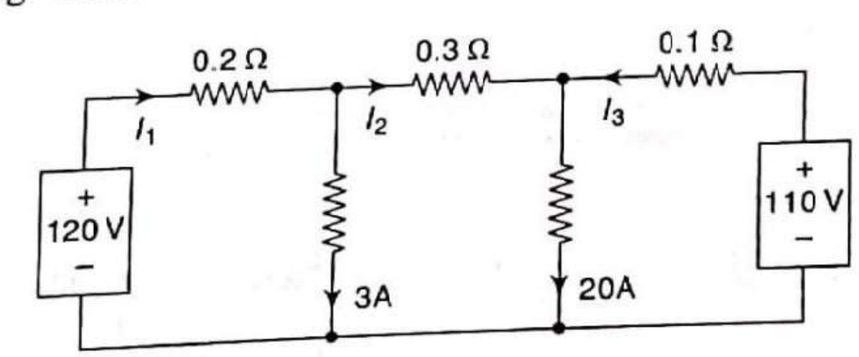

Fig. 1.202

Solution

Marking the different nodes, we get Fig. 1.203.

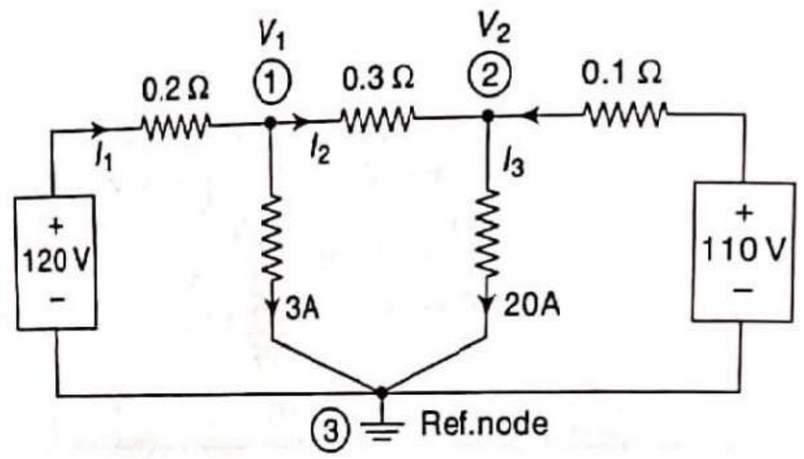

Fig. 1.203

Applying KCL at node 1,

$$I_1 = 3 + I_2$$

or $$\frac{120 - V_1}{0.2} = 3 + \frac{V_1 - V_2}{0.3}$$

or $$5V_1 - 2V_2 = 358.2 \qquad \text{(i)}$$

Applying KCL at node 2,

$$I_2 + I_3 = 20$$

or $$\frac{V_1 - V_2}{0.3} + \frac{110 - V_2}{0.1} = 20$$

or $$V_1 - 4V_2 = -324 \qquad \text{(ii)}$$

From Eqs (i) and (ii),

$$V_1 = 115.6 \text{ V}$$
$$V_2 = 109.9 \text{ V}$$

So, $$I_1 = \frac{120 - V_1}{0.2} = 22 \text{ A}, \quad I_2 = \frac{V_1 - V_2}{0.3} = 19 \text{ A}, \quad I_3 = \frac{110 - V_2}{0.1} = 1 \text{ A}$$

Example 1.58 By nodal analysis, determine the voltages at nodes A and B in the circuit of Fig. 1.204.

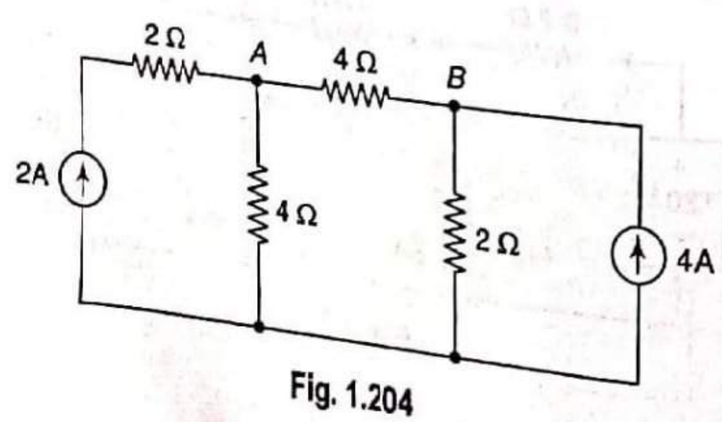

Fig. 1.204

Solution

Assigning the unknown currents, we get the circuit as shown in Fig. 1.205.

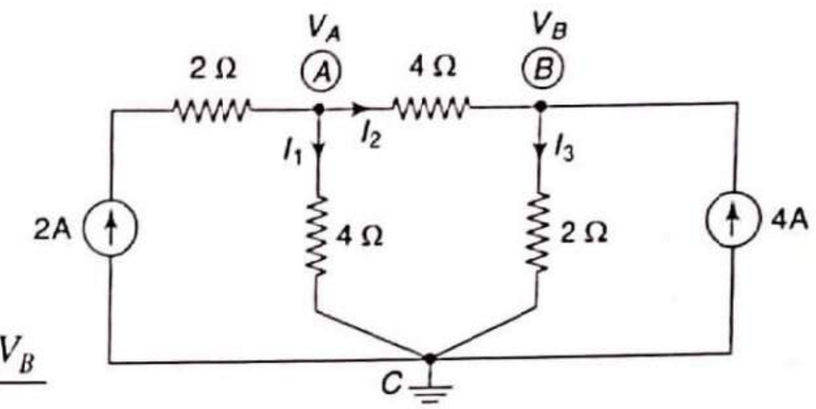

Fig. 1.205

Applying KCL at node A,

$$2 = I_1 + I_2$$

or $$2 = \frac{V_A - 0}{4} + \frac{V_A - V_B}{4}$$

or $$2V_A - V_B = 8 \qquad \text{(i)}$$

Applying KCL at node B,

$$I_2 + 4 = I_3$$

or $$\frac{V_A - V_B}{4} + 4 = \frac{V_B - 0}{2}$$

or $$V_A - 3V_B = -16 \qquad \text{(ii)}$$

From Eqs (i) and (ii),

$$V_A = 8 \text{ V}$$
$$V_B = 8 \text{ V}$$

Example 1.59 Find the current through 2 Ω and 3 Ω resistances using nodal analysis in the circuit of Fig. 1.206.

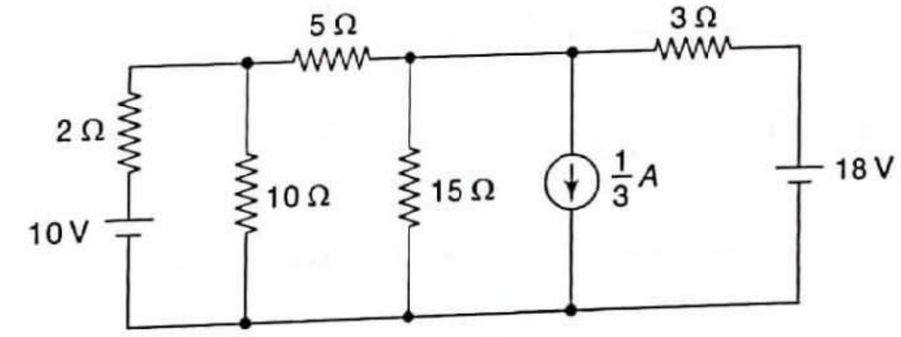

Fig. 1.206

Solution

By joining the same nodes and assigning the unknown currents, the given circuit is redrawn in Fig. 1.207.

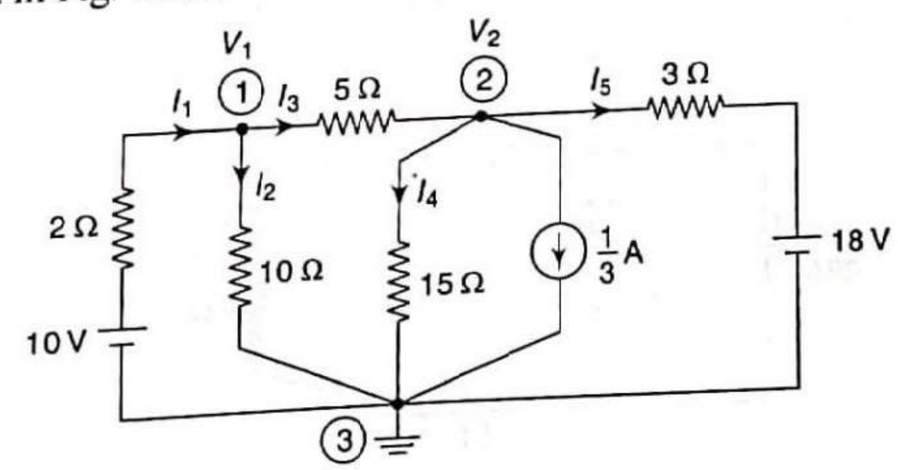

Fig. 1.207

Applying KCL at node 1,

$$I_1 = I_2 + I_3$$

or $$\frac{10 - V_1}{2} = \frac{V_1 - 0}{10} + \frac{V_1 - V_2}{5}$$

or $$8V_1 - 2V_2 = 50 \qquad \text{(i)}$$

Applying KCL at node 2,

or $$I_3 = I_4 + I_5 + \frac{1}{3}$$

or $$\frac{V_1 - V_2}{5} = \frac{V_2 - 0}{15} + \frac{V_2 - 18}{3} + \frac{1}{3}$$

or $$3V_1 - 9V_2 = -85 \qquad \text{(ii)}$$

From Eqs (i) and (ii),

$$V_1 = 9.394 \text{ V}$$
$$V_2 = 12.576 \text{ V}$$

Now, $I_{2\Omega} = \dfrac{10 - V_1}{2} = 0.303 \text{ A}(\uparrow)$, $\quad I_{3\Omega} = \dfrac{V_2 - 18}{3} = -1.81 \text{ A } (\rightarrow)$

Example 1.60 Find the currents in the various resistors of the circuit shown in Fig. 1.208.

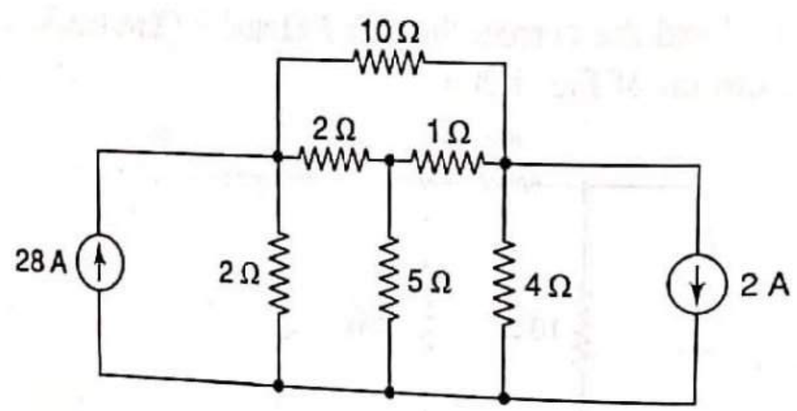

Fig. 1.208

Solution

By joining the same nodes and assigning the unknown currents, the given circuit is redrawn in Fig. 1.209.

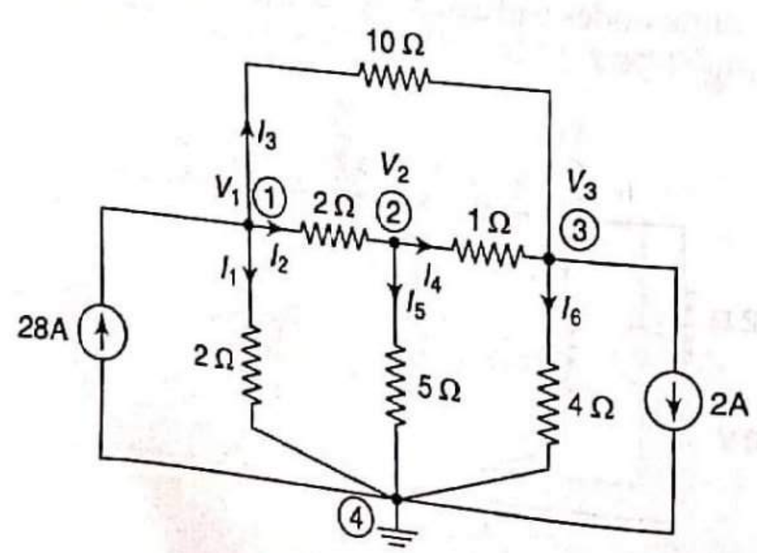

Fig. 1.209

Applying KCL at node 1,

$$28 = I_1 + I_2 + I_3$$

or $$28 = \frac{V_1 - 0}{2} + \frac{V_1 - V_2}{2} + \frac{V_1 - V_3}{10}$$

or $$11V_1 - 5V_2 - V_3 = 280 \qquad \text{(i)}$$

Applying KCL at node 2,

$$I_2 = I_4 + I_5$$

or $$\frac{V_1 - V_2}{2} = \frac{V_2 - V_3}{1} + \frac{V_2 - 0}{5}$$

or $$5V_1 - 17V_2 + 10V_3 = 0 \qquad \text{(ii)}$$

Applying KCL at node 3,

$$I_3 + I_4 = I_6 + 2$$

or $$\frac{V_1 - V_3}{10} + \frac{V_2 - V_3}{1} = \frac{V_3 - 0}{4} + 2$$

or $$V_1 + 10V_2 - 13.5V_3 = 20 \qquad \text{(iii)}$$

The values of V_1, V_2, and V_3 may be found by solving the above three simultaneous equations or by the method of determinants as given below:

Putting the above three equations in matrix form, we have

$$\begin{bmatrix} 11 & -5 & -1 \\ 5 & -17 & 10 \\ 1 & 10 & -13.5 \end{bmatrix} \begin{bmatrix} V_1 \\ V_2 \\ V_3 \end{bmatrix} = \begin{bmatrix} 280 \\ 0 \\ 20 \end{bmatrix}$$

$$\Delta = \begin{vmatrix} 11 & -5 & -1 \\ 5 & -17 & 10 \\ 1 & 10 & -13.5 \end{vmatrix} = 970, \qquad \Delta_1 = \begin{vmatrix} 280 & -5 & -1 \\ 0 & -17 & 10 \\ 20 & 10 & -13.5 \end{vmatrix} = 34{,}920$$

$$\Delta_2 = \begin{vmatrix} 11 & 280 & -1 \\ 5 & 0 & 10 \\ 1 & 20 & -13.5 \end{vmatrix} = 19{,}400, \qquad \Delta_3 = \begin{vmatrix} 11 & -5 & 280 \\ 5 & -17 & 0 \\ 1 & 10 & 20 \end{vmatrix} = 15{,}520$$

By Cramer's rule,

$$V_1 = \frac{\Delta_1}{\Delta} = \frac{34{,}920}{970} = 36 \text{ V}, \qquad V_2 = \frac{\Delta_2}{\Delta} = \frac{19{,}400}{970} = 20 \text{ V},$$

$$V_3 = \frac{\Delta_3}{\Delta} = \frac{15{,}520}{970} = 16 \text{ V}$$

The various currents shown in Fig. 1.209 can be calculated as

$$I_1 = \frac{V_1 - 0}{2} = \frac{36 - 0}{2} = 18 \text{ A}$$

$$I_2 = \frac{V_1 - V_2}{2} = \frac{36 - 20}{2} = 8 \text{ A}$$

$$I_3 = \frac{V_1 - V_3}{10} = \frac{36-16}{10} = 2\text{ A}$$

$$I_4 = \frac{V_2 - V_3}{1} = \frac{20-16}{1} = 4\text{ A}$$

$$I_5 = \frac{V_2 - 0}{5} = \frac{20-0}{5} = 4\text{ A}$$

$$I_6 = \frac{V_3 - 0}{4} = \frac{16-0}{4} = 4\text{ A}$$

Example 1.61 Find the current I by using node-voltage analysis for the circuit given in Fig. 1.210.

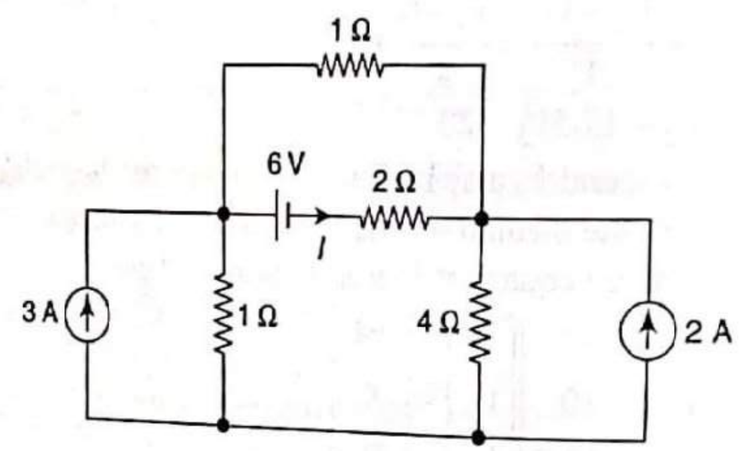

Fig. 1.210

Solution

Marking the different nodes and assuming the unknown currents, we obtain the following circuit:

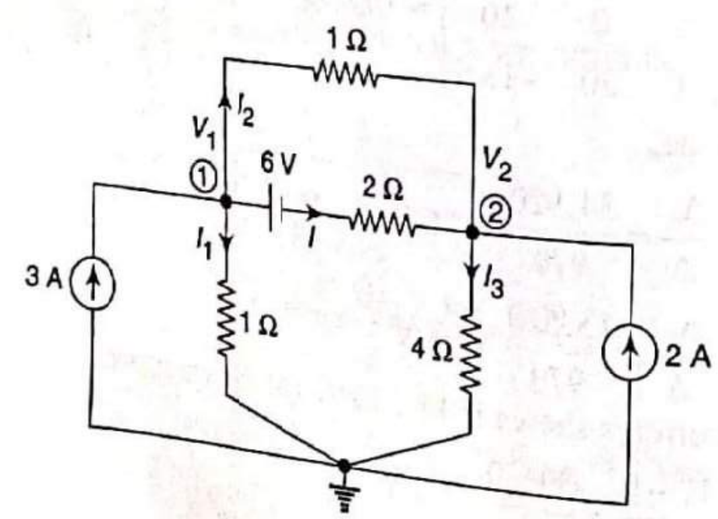

Fig. 1.211

Applying KCL at node 1,

$$3 = I_1 + I + I_2$$

or $$3 = \frac{V_1 - 0}{1} + \frac{(V_1 - 6) - V_2}{2} + \frac{V_1 - V_2}{1}$$

or $$5V_1 - 3V_2 = 12 \qquad \text{(i)}$$

Applying KCL at node 2,

$$I_2 + I + 2 = I_3$$

or $$\frac{V_1 - V_2}{1} + \frac{(V_1 - 6) - V_2}{2} + 2 = \frac{V_2 - 0}{4}$$

or $$6V_1 - 7V_2 = 4 \qquad \text{(ii)}$$

From Eqs (i) and (ii),

$$V_1 = 4.2353\text{ V}$$
$$V_2 = 3.0588\text{ V}$$

Now, $$I = \frac{(V_1 - 6) - V_2}{2} = \frac{(4.2353 - 6) - 3.0588}{2} = -2.412\text{ A}$$

Hint In Fig. 1.211, the expression of current I in terms of node voltages is determined as follows:

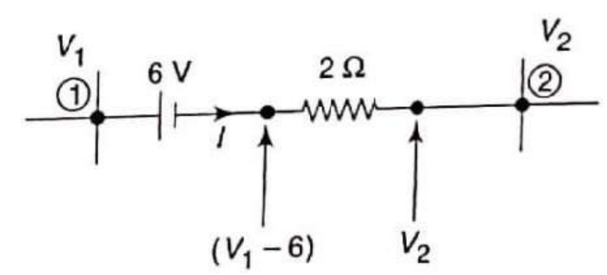

Fig. 1.212

By Ohm's law,

$$I = \frac{\text{Potential difference across 2 Ω resistor}}{\text{Resistance}}$$

The current I flows through the 2 Ω resistor from node 1 to node 2 (i.e., from right end to left end of 2 Ω resistor)

So, potential difference across 2 Ω resistor

= Potential at right end of 2 Ω resistor – Potential at left end of 2 Ω resistor

$= (V_1 - 6) - V_2$

So,

$$I = \frac{(V_1 - 6) - V_2}{2}$$

Example 1.62 Find the current through 4 Ω and 3 Ω resistances using nodal analysis in the circuit of Fig. 1.213.

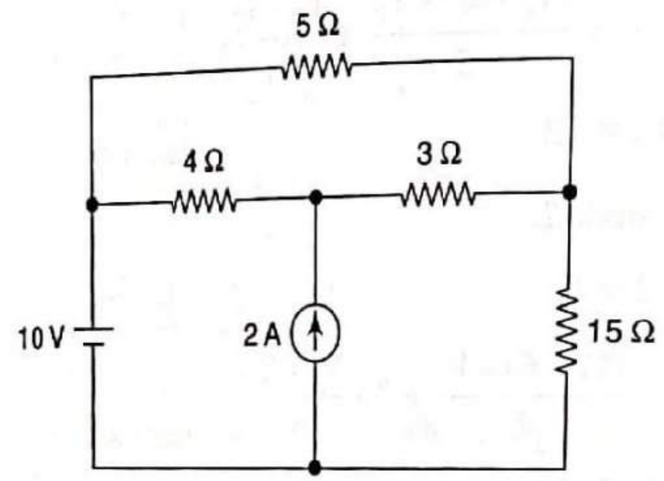

Fig. 1.213

Solution

Marking the different nodes, we get Fig. 1.214.

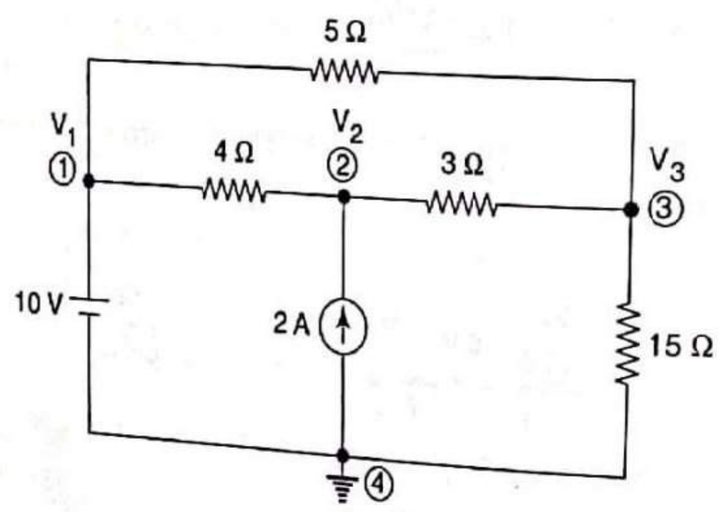

Fig. 1.214

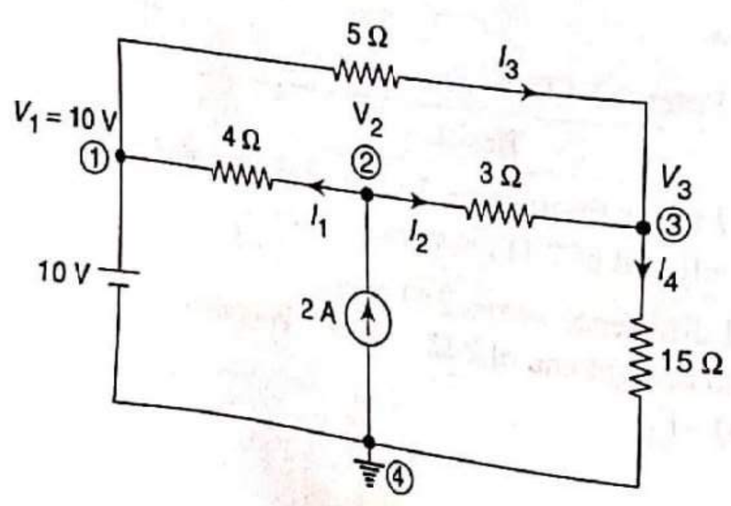

Fig. 1.215

As voltage source of 10 V is directly connected between the reference node (node 4) and non-reference node (node 1) with positive polarity towards node 1, the voltage at node 1 is 10 V with respect to reference node.

Thus $V_1 = 10$ (i)

Hint: If voltage source is connected between the reference node and non-reference node, then set a voltage at non-reference node equal to the voltage source. In this case, the solution becomes simple as application of KCL at non-reference node is not required.

Now assigning the unknown currents at node 2 and node 3, we get Fig. 1.215. Note that as voltage at node 1 is known, application of KCL at this node is not required.

Applying KCL at node 2,

$$2 = I_1 + I_2$$

or $$2 = \frac{V_2 - 10}{4} + \frac{V_2 - V_3}{3}$$

or $$7V_2 - 4V_3 = 54 \quad \text{(i)}$$

Applying KCL at node 3,

$$I_3 + I_2 = I_4$$

or $$\frac{10 - V_3}{5} + \frac{V_2 - V_3}{3} = \frac{V_3 - 0}{15}$$

or $$5V_2 - 9V_3 = -30 \quad \text{(ii)}$$

From Eqs (i) and (ii)

$$V_2 = 14.09 \text{ V}$$

$$V_3 = 11.16 \text{ V}$$

So, $$I_{4\Omega} = \frac{V_2 - 10}{4} = \frac{11.16 - 10}{4} = 0.29 \text{ A}$$

$$I_{3\Omega} = \frac{V_2 - V_3}{3} = \frac{14.09 - 11.16}{3} = 0.98 \text{ A}$$

Example 1.63 Find the current through 6 Ω resistance using nodal analysis in the circuit of Fig 1.216.

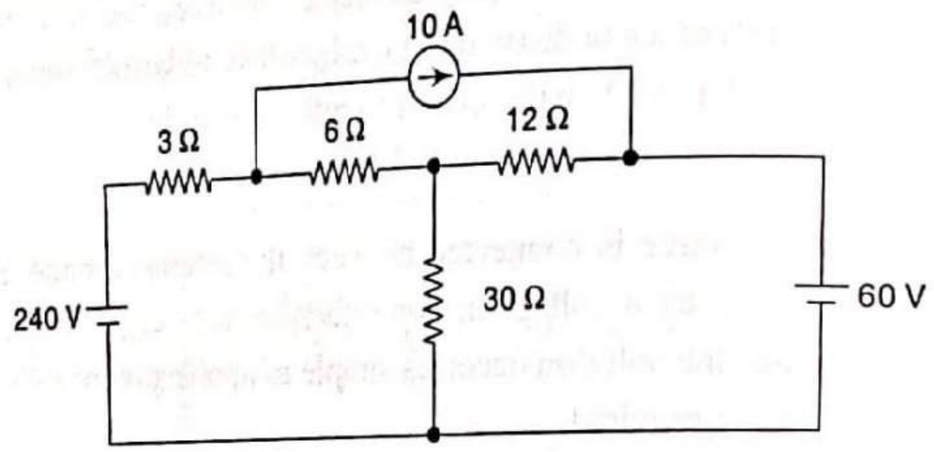

Fig. 1.216

Solution

Marking the different nodes and assigning the unknown currents, the given circuit is redrawn in Fig. 1.217.

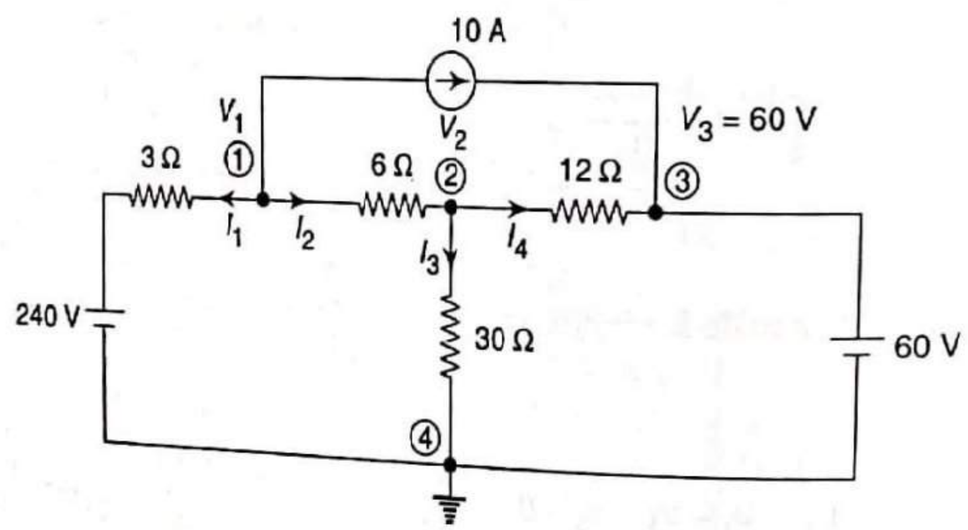

Fig. 1.217

A voltage source of 60 V is connected between node 3 and the reference node (node 4).

So, $V_3 = 60$

Applying KCL at node 1,

$$I_1 + I_2 + 10 = 0$$

or $$\frac{V_1 - 240}{3} + \frac{V_1 - V_2}{6} + 10 = 0$$

or $$3V_1 - V_2 = 420 \qquad \text{(i)}$$

Applying KCL at node 2,

$$I_2 = I_3 + I_4$$

or $$\frac{V_1 - V_2}{6} = \frac{V_2 - 0}{30} + \frac{V_2 - 60}{12}$$

or $$60V_1 - 102V_2 = -1800 \qquad \text{(ii)}$$

From Eqs (i) and (ii)

$V_1 = 181.46$ V

$V_2 = 124.39$ V

So, $$I_{6\,\Omega} = \frac{V_1 - V_2}{6} = \frac{181.46 - 124.39}{6} = 9.51 \text{ A}$$

1.16 Superposition Theorem

This theorem is applicable for linear[2] and bilateral[3] networks. According to this theorem, if there are number of sources acting simultaneously in any linear bilateral networks, then each source acts independently of the others, i.e., as if other source did not exit. Hence, this theorem may be stated as in a linear network containing more than one sources, the resulted current in any branch is the algebraic sum of the currents that would be produced by each source, acting alone, all other sources of emf being replaced by their respective internal resistances.

Illustration

Consider a network shown in Fig. 1.218, having two voltage sources V_1 and V_2. Let us calculate the current in branch AB of the network by using superposition theorem.

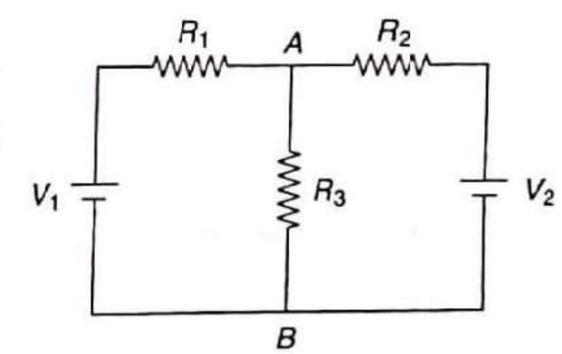

Fig. 1.218 DC circuit

Case (i) According to superposition theorem, each source acts independently. Consider source V_1 acting independently. At this time, other sources must be replaced by internal resistances. But as internal resistance of V_2 is not given, i.e., it is assumed to be zero, V_2 must be replaced by short circuit. Thus, the circuit becomes as shown in Fig. 1.219(a). Using any of the techniques, obtain the current through branch AB, i.e., I_{AB} due to source V_1 alone.

Case (ii) Now, consider source V_2 alone, with V_1 replaced by a short circuit, to obtain the current through branch AB. The corresponding circuit is shown in Fig. 1.219(b). Obtain I_{AB} due to V_2 alone by using any of the techniques such as mesh analysis, nodal analysis, and source transformation.

[2]A network is said to be linear if current is linearly related to voltage as per Ohm's law.

[3]In a bilateral network, the voltage–current relation is the same for the current flowing in either direction.

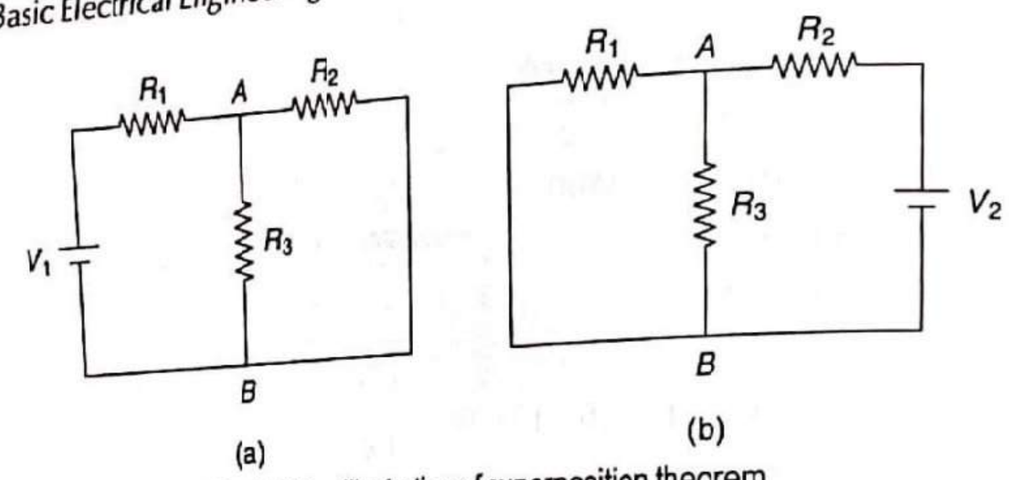

Fig. 1.219 Illustration of superposition theorem

Case (iii) According to superposition theorem, the resultant current through branch AB is the sum of the currents through branch AB produced by each source acting independently.

Hence, $I_{AB} = I_{AB}$ due to $V_1 - I_{AB}$ due to V_2

Example 1.64 In the circuit shown in Fig. 1.220, find the different branch currents by using superposition theorem.

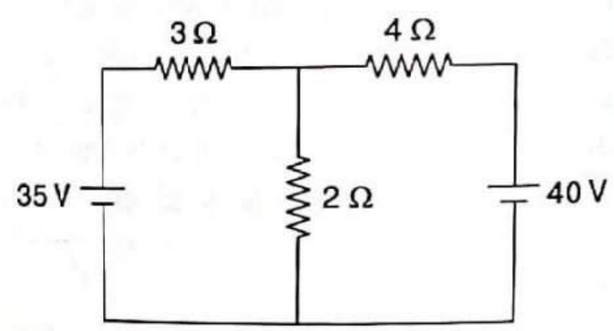

Fig. 1.220

Solution

Step I: Considering 35 V source acting alone, replacing 40 V source by short circuit, we get the circuit as shown in Fig. 1.221.

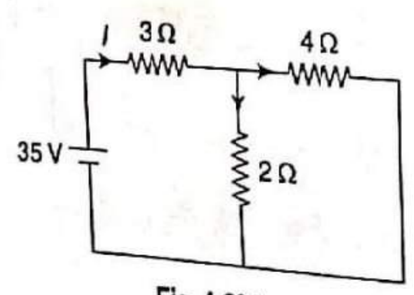

Fig. 1.221

In circuit of Fig. 1.221, as single source is acting, the actual directions of currents are marked. These branch currents can be calculated as follows:

The equivalent resistance across the source,

$$R_{eq} = 3 + (2 \parallel 4) = 3 + \frac{2 \times 4}{2+4} = 4.33\ \Omega$$

By Ohm's law, total circuit current, $I = \dfrac{V}{R_{eq}} = \dfrac{35}{4.33} = 8.08$ A

Hence, current in 3 Ω resistor, $I_{3\Omega} = 8.08$ A (→)

By current division rule, current in 4 Ω resistor, $I_{4\Omega} = 8.08 \times \dfrac{2}{2+4} = 2.69$ A(→)

Current in 2 Ω resistor, $I_{2\Omega} = 8.08 - 2.69 = 5.39$ A(↓)

Step II: Considering 40 V source acting alone, replacing 35 V source by short circuit, we get the circuit as shown in Fig. 1.222.

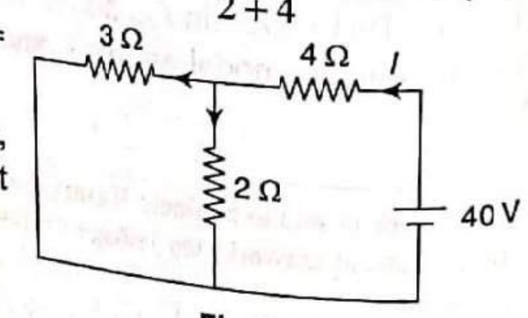

Fig. 1.222

In circuit of Fig. 1.222, as single source is acting, the actual directions of currents are marked. These branch currents can be calculated as follows:

The equivalent resistance across the source, $R_{eq} = 4 + (3 \parallel 2) = 4 + \dfrac{3 \times 2}{3+2} = 5.2$ Ω

By Ohm's law, total circuit current, $I = \dfrac{V}{R_{eq}} = \dfrac{40}{5.2} = 7.69$ A

∴ Current in 4 Ω resistor, $I_{4\Omega} = 7.69$ A(←)

By current division rule, current in 3 Ω resistor, $I_{3\Omega} = 7.69 \times \dfrac{2}{3+2} = 3.08$ A(←)

Current in 2 Ω resistor, $I_{2\Omega} = 7.69 - 3.08 = 4.61$ A(↓)

Step III: By principle of superposition, the resultant branch currents can be calculated as follows:

Current in 3 Ω resistor, $I_{3\Omega} = 8.08$ A(→) + 3.08 A(←) = 5 A(→)

Current in 2 Ω resistor, $I_{2\Omega} = 5.39$ A(↓) + 4.61 A (↓) = 10 A (↓)

Current in 4 Ω resistor, $I_{4\Omega} = 2.69$ A(→) + 7.69 A(←) = 5 A(←)

Example 1.65 Determine the current in 1 Ω resistor between A and B from the network shown in Fig. 1.223 by superposition theorem.

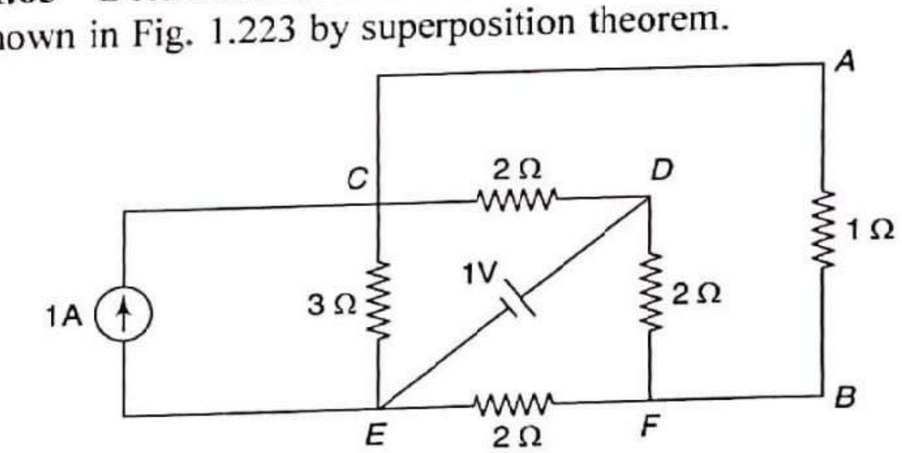

Fig. 1.223

Solution

Step I: Considering 1 A source acting alone, replacing 1 V source by short circuit, we get Fig. 1.224. Nodes D and E are same, and by joining them, we get the circuit

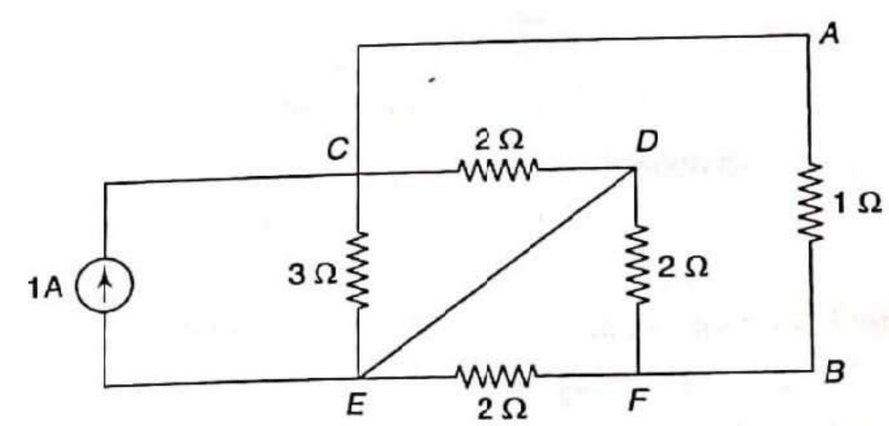

Fig. 1.224

as shown in Fig. 1.225(a). Replacing the parallel combinations, we get the circuit as shown in Fig. 1.225(b), where branch *CE* is parallel to branch *CABE*.
The total current in the circuit is 1 A, which divides at node *C*.

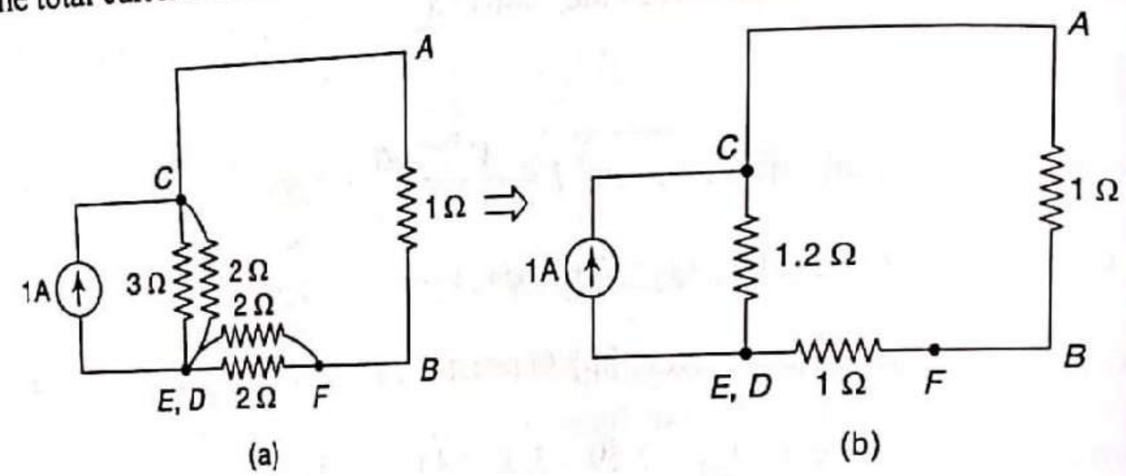

Fig. 1.225

Hence, by applying current division rule, current in 1 Ω resistor between *A* and *B* is given as

$$I_{AB} = I_{1\Omega} = 1 \times \frac{1.2}{1.2+(1+1)} = 0.375 \text{ A}(\downarrow)$$

Step II: Considering 1 V source acting alone, replacing 1 A source by open circuit, we obtain the following circuit:
Assuming the separate mesh current for each mesh, we get the circuit as shown in Fig. 1.227.

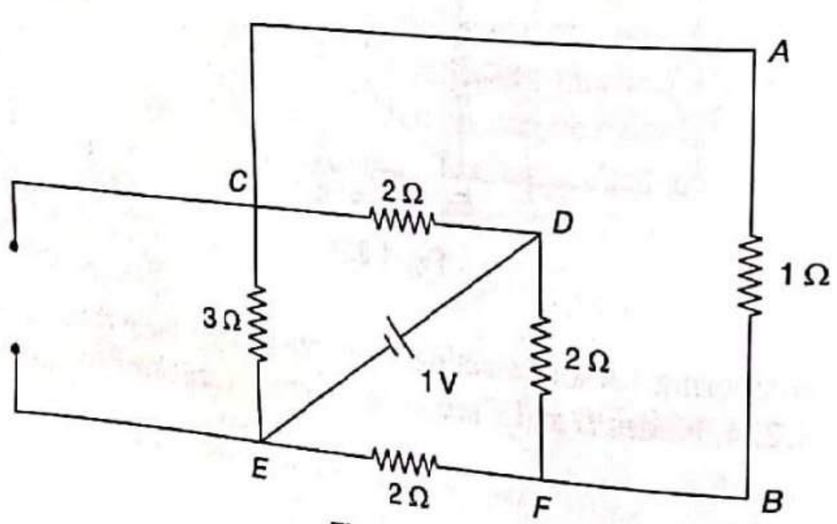

Fig. 1.226

Applying KVL to mesh 1,

$$-3I_1 - 2(I_1 - I_3) - 1 = 0$$

or $\quad 5I_1 - 2I_3 = -1 \qquad$ (i)

Applying KVL to mesh 2,

$$1 - 2(I_2 - I_3) - 2I_3 = 0$$

or $\quad 4I_2 - 2I_3 = 1 \qquad$ (ii)

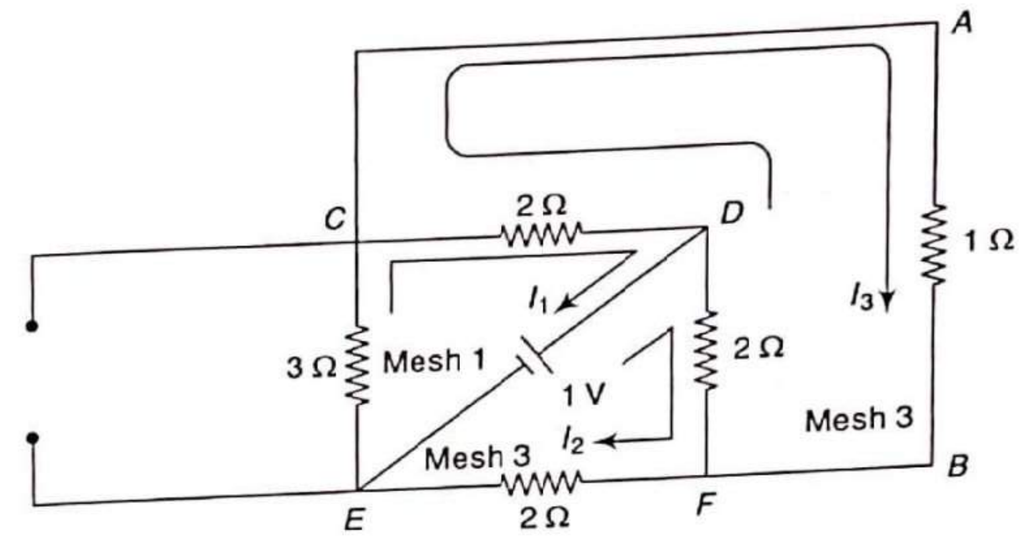

Fig. 1.227

Applying KVL to mesh 3,

$$-2(I_3 - I_1) - I_3 - 2(I_3 - I_2) = 0 \qquad \text{(iii)}$$

or $\quad 2I_1 + 2I_2 - 5I_3 = 0$

The values of I_3 may be found by solving the above three simultaneous equations or by the method of determinants as given below. Putting the above three equations in the matrix form, we have

$$\begin{bmatrix} 5 & 0 & -2 \\ 0 & 4 & -2 \\ 2 & 2 & -5 \end{bmatrix} \begin{bmatrix} I_1 \\ I_2 \\ I_3 \end{bmatrix} = \begin{bmatrix} -1 \\ 1 \\ 0 \end{bmatrix}$$

$$\Delta = \begin{vmatrix} 5 & 0 & -2 \\ 0 & 4 & -2 \\ 2 & 2 & -5 \end{vmatrix} = -64, \qquad \Delta_3 = \begin{vmatrix} 5 & 0 & -1 \\ 0 & 4 & 1 \\ 2 & 2 & 0 \end{vmatrix} = -2$$

By Cramer's rule,

$$I_3 = \frac{\Delta_3}{\Delta} = \frac{-2}{-64} = 0.031 \text{ A}$$

Hence, $I_{AB} = I_{1\Omega} = 0.031 \text{ A}(\downarrow)$

Step III: According to superposition theorem, resultant current through 1 Ω resistor, i.e., through branch *AB*, is algebraic sum of currents due to individual sources acting alone.
Hence, $I_{AB} = I_{1\Omega} = 0.375 \text{ A}(\downarrow) + 0.031 \text{ A}(\downarrow) = 0.406 \text{ A}(\downarrow)$

Example 1.66 Determine the current in 20 Ω resistor in the network shown in Fig. 1.228 by superposition theorem.

Solution

Step I: Considering 10 V source acting alone, replacing 8 V source and 12 V source by short circuit, we obtain Fig. 1.229.

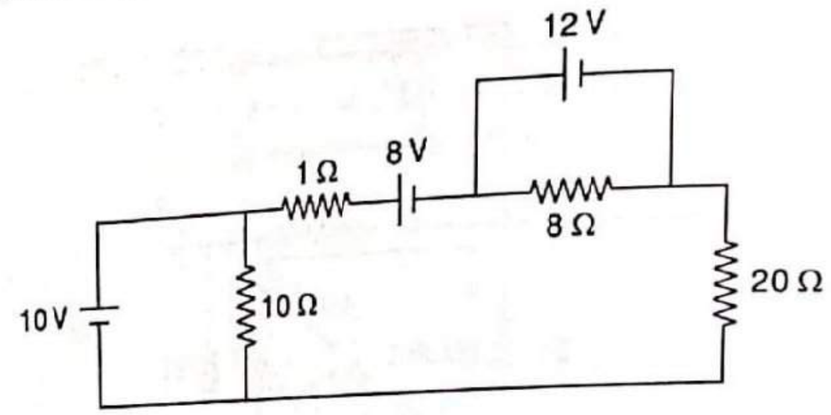

Fig. 1.228

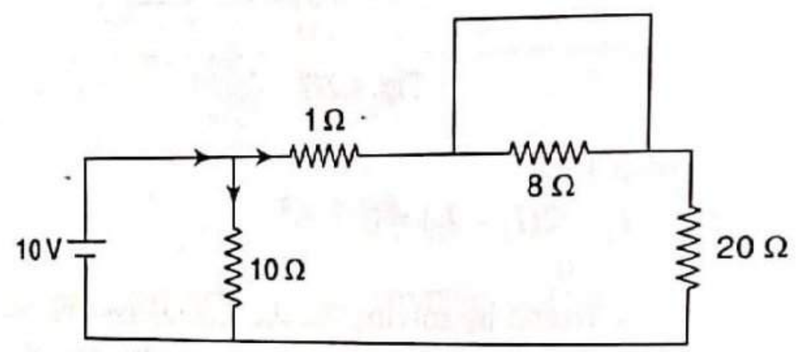

Fig. 1.229

In the circuit of Fig. 1.229, the 8 Ω resistor gets short circuited, i.e., $I_{8\Omega} = 0$ A. For circuit simplification, the 8 Ω resistor can be removed. By removing 8 Ω resistor, we get the following circuit:

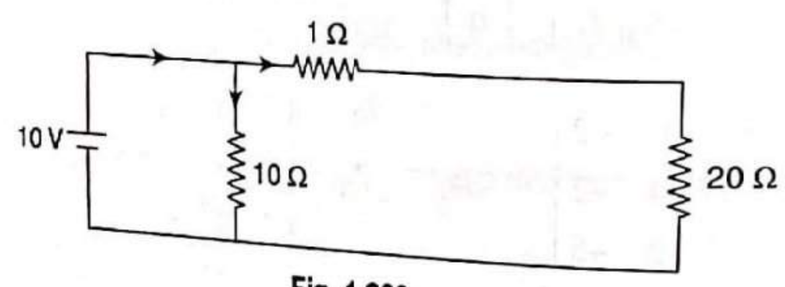

Fig. 1.230

By Ohm's law, $I_{20\Omega} = \dfrac{10}{1+20} = 0.476$ A(↓)

Step II: Considering 12 V source acting alone, replacing 8 V source and 10 V source by short circuit, we get Fig. 1.231.

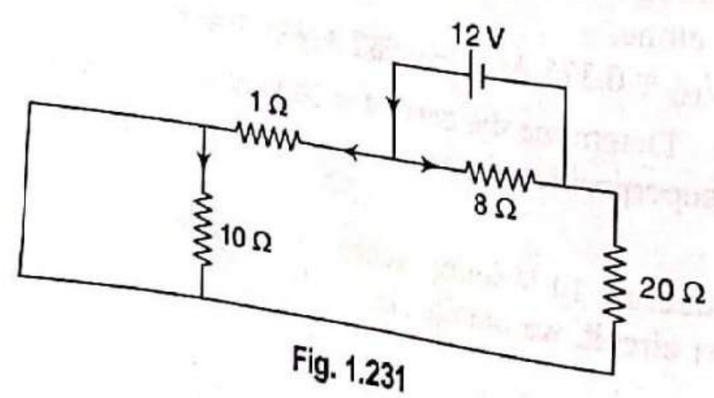

Fig. 1.231

In the circuit of Fig. 1.231, the 10 Ω resistor gets short circuited, i.e., $I_{10\Omega} = 0$ A. For circuit simplification, the resistor 10 Ω can be removed. By removing 10 Ω resistor, we get the circuit as shown in Fig. 1.232(a). Now, replacing series combination (1 Ω + 20 Ω), we get the circuit as shown in Fig. 1.232(b).

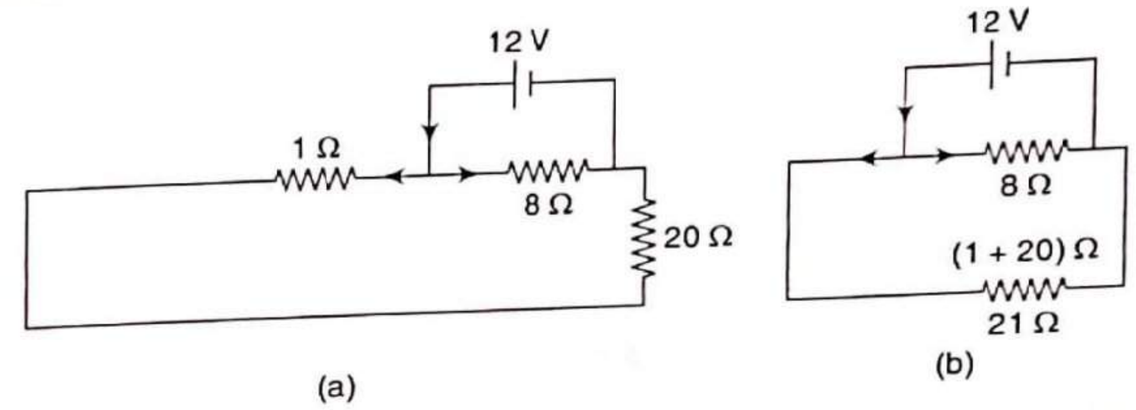

Fig. 1.232

By Ohm's law, $I_{20\Omega} = \dfrac{12}{1+20} = 0.571$ A(↑)

Step III: Considering 8 V source acting alone, replacing 10 V source and 12 V source by short circuit, we get the following circuit:

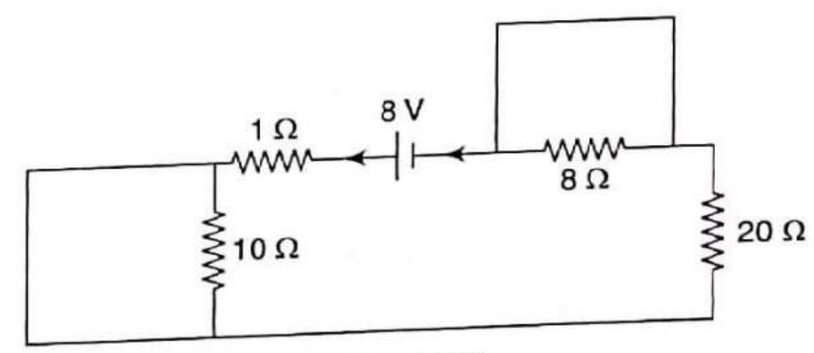

Fig. 1.233

In the circuit of Fig. 1.233, the resistors 10 Ω and 8 Ω get short circuited. For circuit simplification, the resistors 10 Ω and 8 Ω can be removed. By removing 10 Ω and 8 Ω resistors, we get the circuit as shown in Fig. 1.234.

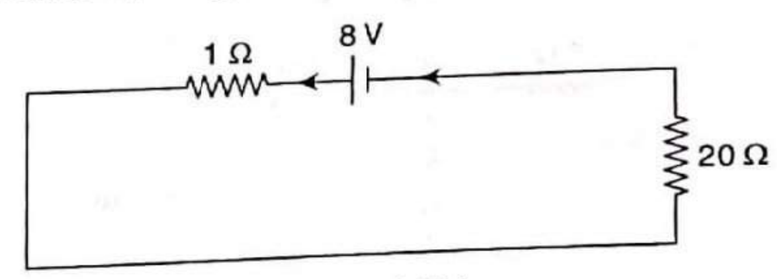

Fig. 1.234

By Ohm's law, $I_{20\Omega} = \dfrac{8}{1+20} = 0.381$ A(↑)

Step IV: According to superposition theorem, resultant current through 20 Ω resistor is algebraic sum of currents due to individual sources acting alone.

Hence, $I_{20\Omega} = 0.476$ A(↓) + 0.571 A(↑) + 0.381 A(↑) = 0.476 A(↑)

Example 1.67 Determine the current in 1 Ω resistor in the network shown in Fig. 1.235 by superposition theorem.

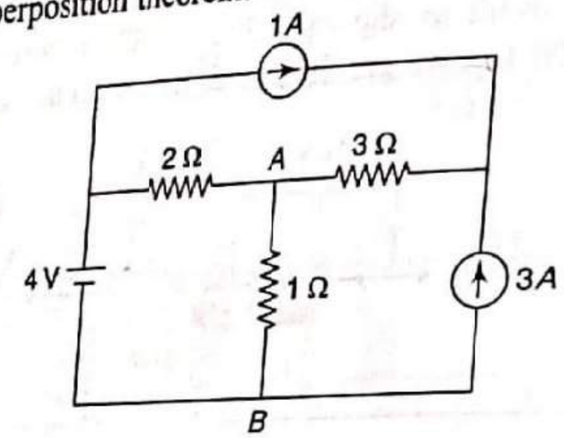

Fig. 1.235

Solution

Step I: Considering 4 V source acting alone, replacing 1 A source and 3 A source by open circuit, we get the following circuit:

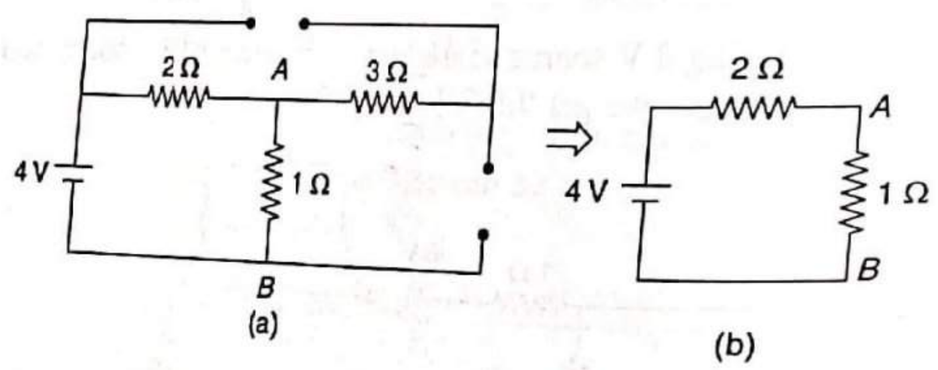

Fig. 1.236

By Ohm's law, $I_{AB} = I_{1\Omega} = \dfrac{4}{2+1} = 1.33\ \text{A}(\downarrow)$

Step II: Consider 3 A source acting alone, replacing 4 V source by short circuit and 1 A source by open circuit, we obtain the circuit as shown below:

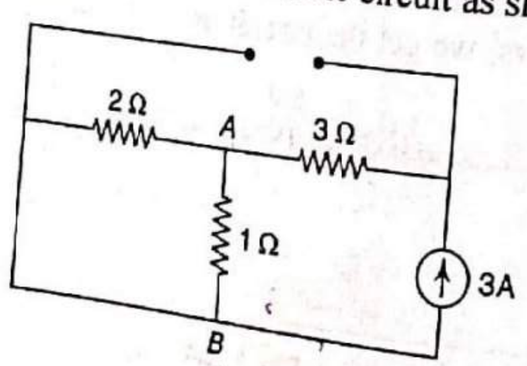

Fig. 1.237

In Fig. 1.237, current flowing through 3 Ω resistor, $I_{3\Omega} = 3\ \text{A}(\leftarrow)$. This current divides at node A. Resistors 2 Ω and 1 Ω are in parallel. By current division rule,

$$I_{AB} = I_{1\Omega} = 3 \times \frac{2}{2+1} = 2\ \text{A}(\downarrow)$$

Step III: Consider 1A source acting alone, replacing 4 V source by short circuit and 3 A source by open circuit, we obtain the following circuit:

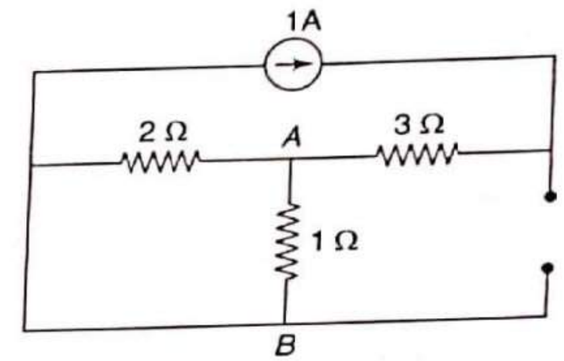

Fig. 1.238

In Fig. 1.238, current flowing through 3 Ω resistor, $I_{3\Omega} = 1\ \text{A}(\leftarrow)$.This current divides at node A. Resistors 2 Ω and 1 Ω are in parallel. By current division rule,

$$I_{AB} = I_{1\Omega} = 1 \times \frac{2}{2+1} = 0.67\ \text{A}(\downarrow)$$

Step IV: According to superposition theorem, resultant current through 1 Ω resistor is algebraic sum of currents due to individual sources acting alone. Hence,

$$I_{1\Omega} = 1.33\ \text{A}(\downarrow) + 2\ \text{A}(\downarrow) + 0.67\ \text{A}(\downarrow) = 4\ \text{A}(\downarrow)$$

Example 1.68 Determine the current in 5 Ω resistor in the network shown in Fig. 1.239 by superposition theorem.

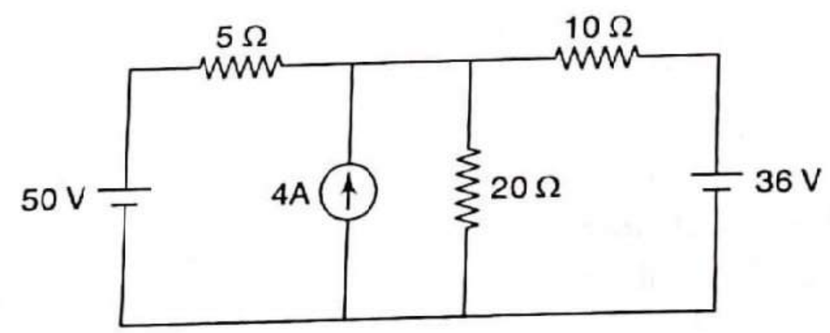

Fig. 1.239

Solution

Step I: Consider 50 V source acting alone, replacing 4 A source by open circuit and 36 V source by short circuit, we get the following circuit:

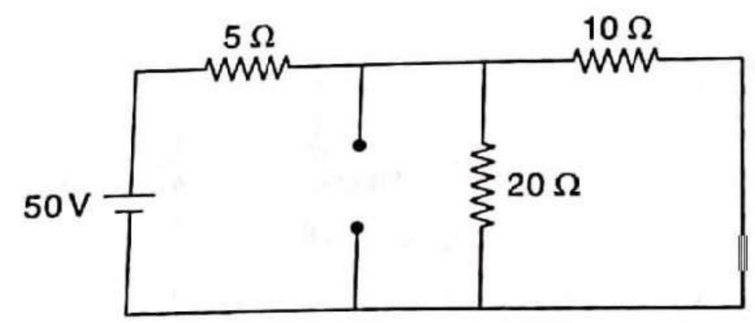

Fig. 1.240

In Fig. 1.240, resistors 20 Ω and 10 Ω are in parallel. So, by circuit reduction technique, we get the simplified circuit as shown in Fig. 1.241.

By Ohm's law, $I_{5\Omega} = \dfrac{50}{5+6.67} = 4.28\ \text{A}(\rightarrow)$

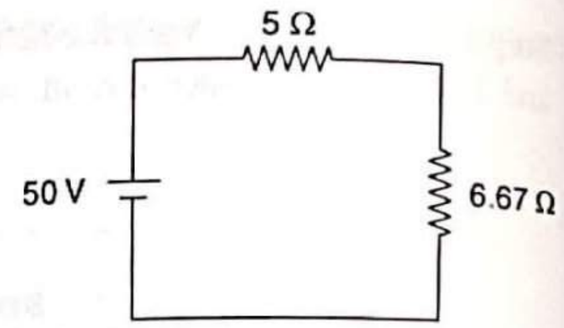

Fig. 1.241

Step II: Considering 4 A source acting alone, replacing 50 V source and 36 V source by short circuit, we obtain the circuit as shown in Fig. 1.242.

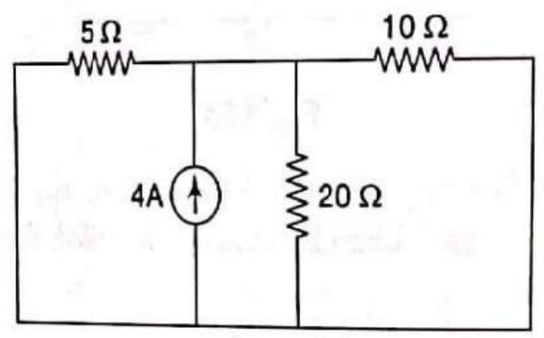

Fig. 1.242

In Fig. 1.242, resistors 20 Ω and 10 Ω are in parallel. By circuit reduction technique, we get the circuit as shown in Fig. 1.216.

In Fig. 1.243, resistors 5 Ω and 6.67 Ω are in parallel. By current division rule,

$$I_{5\Omega} = 4 \times \frac{6.67}{5+6.67} = 2.286\ \text{A}(\leftarrow)$$

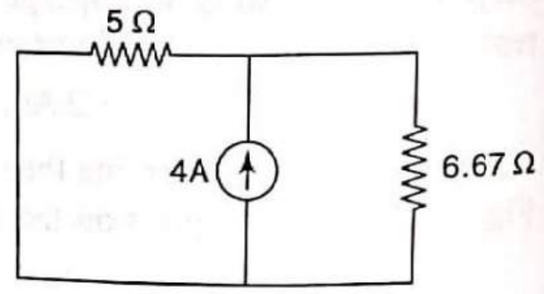

Fig. 1.243

Step III: Consider 36 V source acting alone, replacing 50 V source by short circuit and 4 A source by open circuit. We obtain the circuit as shown in Fig. 1.244.

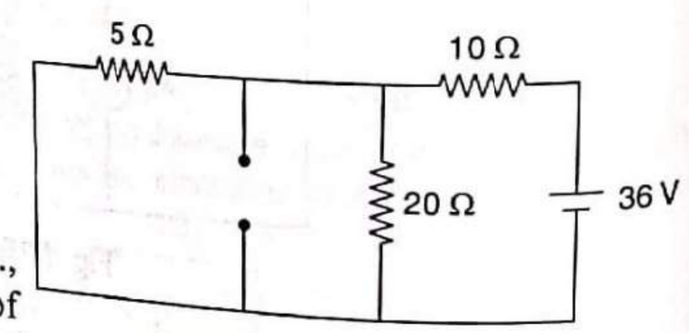

Fig. 1.244

By source transformation, i.e., converting series combination of voltage source of 36 V and resistor of 10 Ω into equivalent parallel combination of current source and resistor, we get the following circuit:

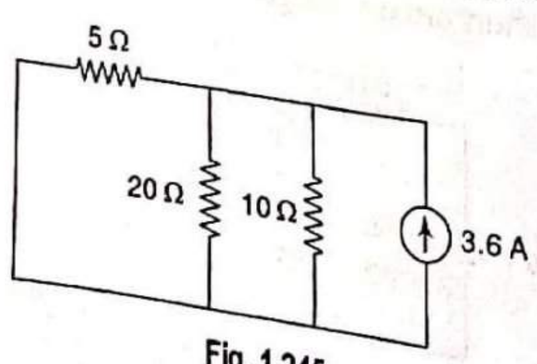

Fig. 1.245

By circuit reduction technique, we get the circuit as shown in Fig. 1.246.

In Fig. 1.246, resistors 6.67 Ω and 5 Ω are in parallel. By current division rule,

$$I_{5\Omega} = 3.6 \times \frac{6.67}{6.67+5} = 2.057\ \text{A}(\leftarrow)$$

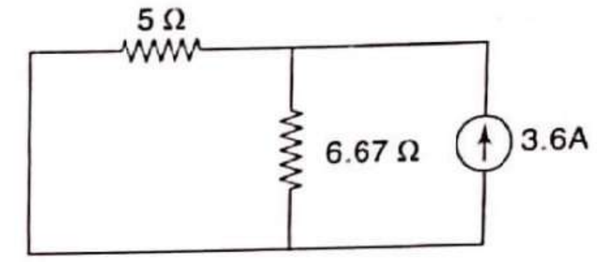

Fig. 1.246

Step IV: According to superposition theorem, resultant current through 5 Ω resistor is algebraic sum of currents due to individual sources acting alone. Hence,

$$I_{5\Omega} = 4.28\ \text{A}(\rightarrow) + 2.286\ \text{A}(\leftarrow) + 2.057\ \text{A}(\leftarrow) = 0.063\ \text{A}(\leftarrow)$$

Example 1.69 Determine the current through 10 Ω resistor in the network shown in Fig. 1.247 by superposition theorem.

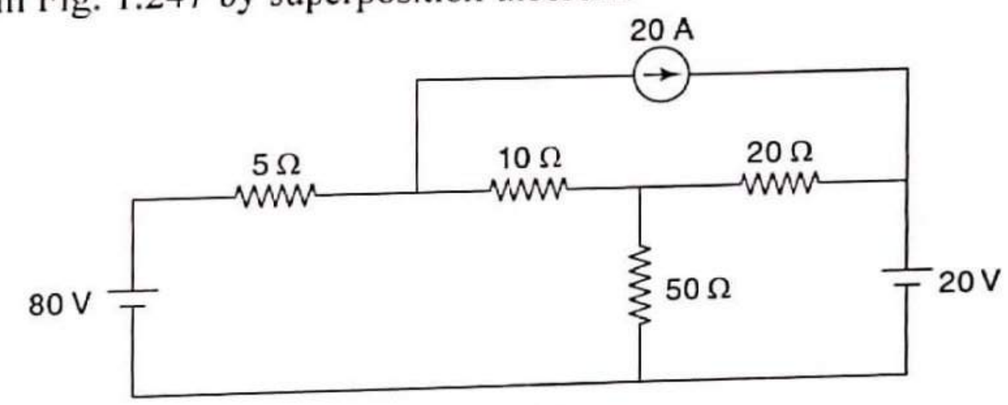

Fig. 1.247

Solution

Step I: Considering 80 V source acting alone, replacing 20 A source by open circuit and 20 V source by short circuit, we get the following circuit (Fig. 1.248):

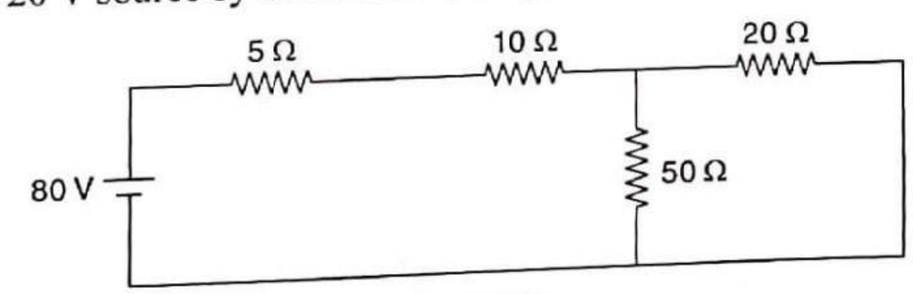

Fig. 1.248

In Fig. 1.248, resistors 20 Ω and 50 Ω are in parallel. By circuit reduction technique, we obtain the simplified circuit as shown below:

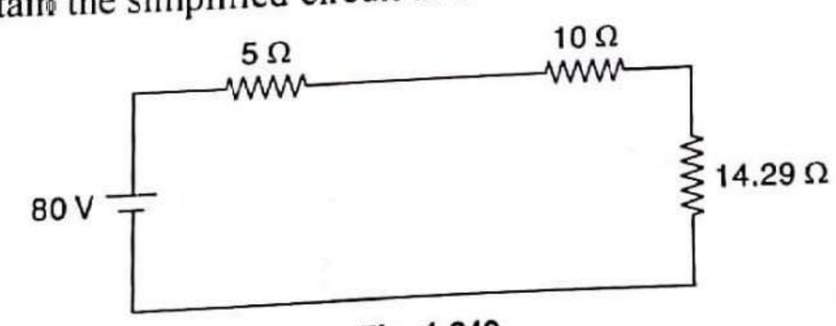

Fig. 1.249

By Ohm's law, $I_{10\Omega} = \dfrac{80}{5+10+14.29} = 2.73\ \text{A}(\rightarrow)$

Step II: Consider 20 V source acting alone, replacing 20 A source by open circuit and 80 V source by short circuit, we get the following circuit:

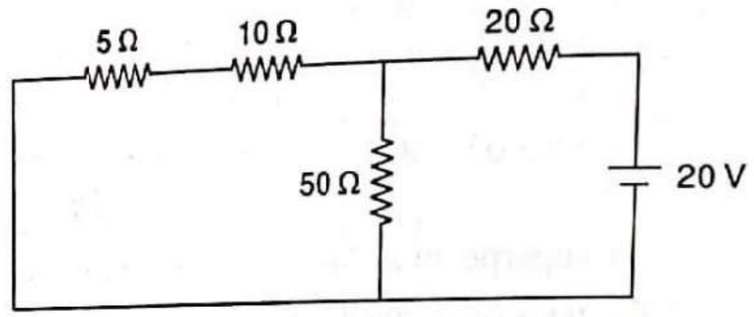

Fig. 1.250

By source transformation, i.e., converting series combination of voltage source of 20 V and resistor of 20 Ω into equivalent parallel combination of current source and resistor, we get the circuit as shown in Fig. 1.251.

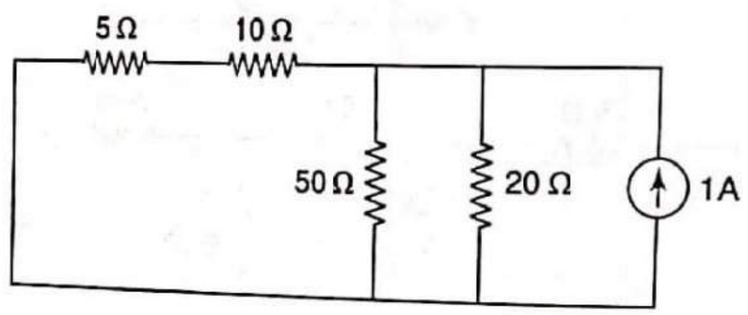

Fig. 1.251

By circuit reduction technique, we get the following circuit:

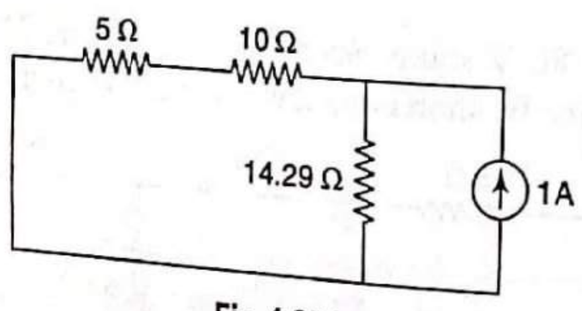

Fig. 1.252

By current division rule, $I_{10\Omega} = 1 \times \dfrac{14.29}{5+10+14.29} = 0.488\ \text{A}(\leftarrow)$

Step III: Consider 20 A source acting alone, replacing 80 V source and 20 V source by short circuit, we get Fig. 1.253.

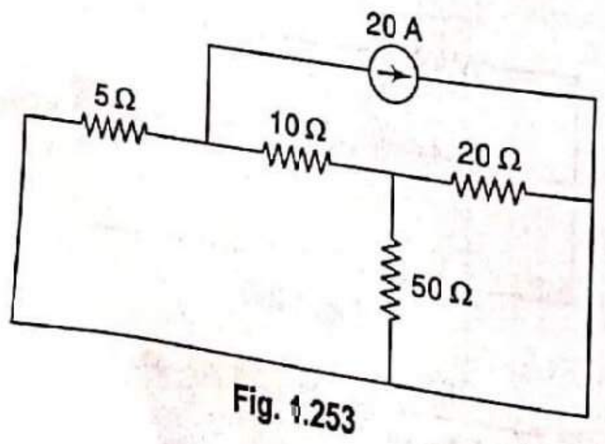

Fig. 1.253

25016

The circuit can be redrawn as follows:

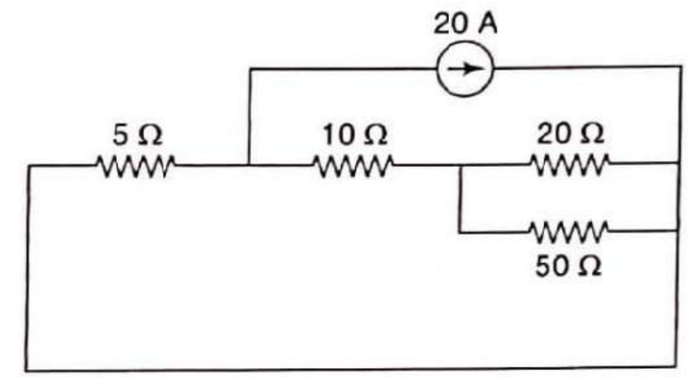

Fig. 1.254

SMT. INDIRA GANDHI COLLEGE OF ENGINEERING LIBRARY Navi Mumbai

By circuit reduction technique, we get the following circuit:

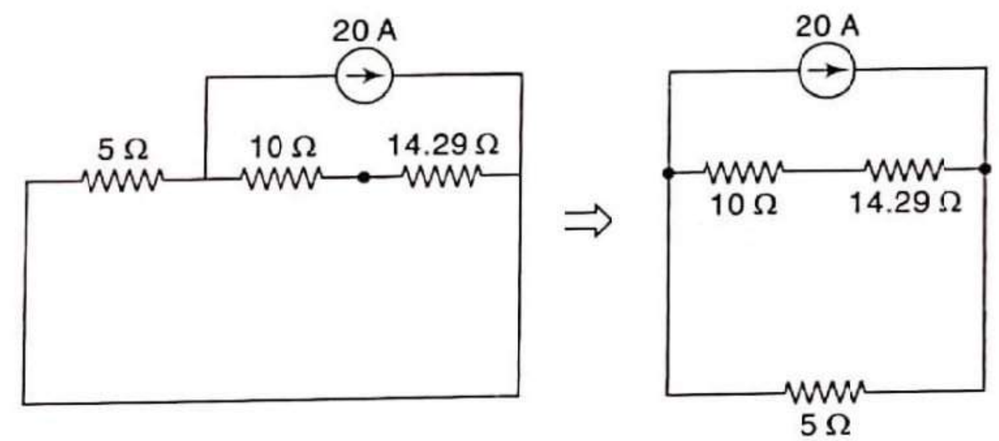

Fig. 1.255

By current division rule, $I_{10\Omega} = 20 \times \dfrac{5}{5+10+14.29} = 3.41\ \text{A}(\leftarrow)$

Step IV: According to superposition theorem, resultant current through 5 Ω resistor is algebraic sum of currents due to individual sources acting alone. Hence,

$$I_{10\Omega} = 2.73\ \text{A}(\rightarrow) + 0.488\ \text{A}(\leftarrow) + 3.41\ \text{A}(\leftarrow) = 1.17\ \text{A}(\leftarrow)$$

1.17 Thevenin's Theorem

Thevenin's theorem is a powerful tool in the hands of engineers to simplify a complex problem and obtain the circuit solution quickly. It reduces the complex circuit to a simple circuit. This theorem is particularly useful to find the current in a particular branch of a network as the resistance of that branch is varied while all other resistances and sources remains constant.

This theorem was first stated by French engineer M.L. Thevenin in 1883. According to this theorem, any two terminal networks, however complex, can be replaced by a single source of emf V_{TH} (called Thevenin voltage) in series with a single resistance R_{TH} (called Thevenin resistance). Figure 1.256(a) shows a complex network enclosed in a box with two terminals A and B brought out. The

network in the box may consist of any number of resistors and emf sources connected in any manner. But according to Thevenin, the entire circuit behind terminals A and B can be replaced by a single source of emf V_{TH} in series with a single resistance R_{TH} as shown in Fig. 1.256(b). The voltage V_{TH} is the voltage that appears across terminals A and B with load removed. The resistance R_{TH} is the resistance obtained with load removed and looking back into the terminals A and B when all the sources in the circuit are replaced by their internal resistances. Once Thevenin's equivalent circuit is obtained, current through any load R_L connected across AB can be readily obtained.

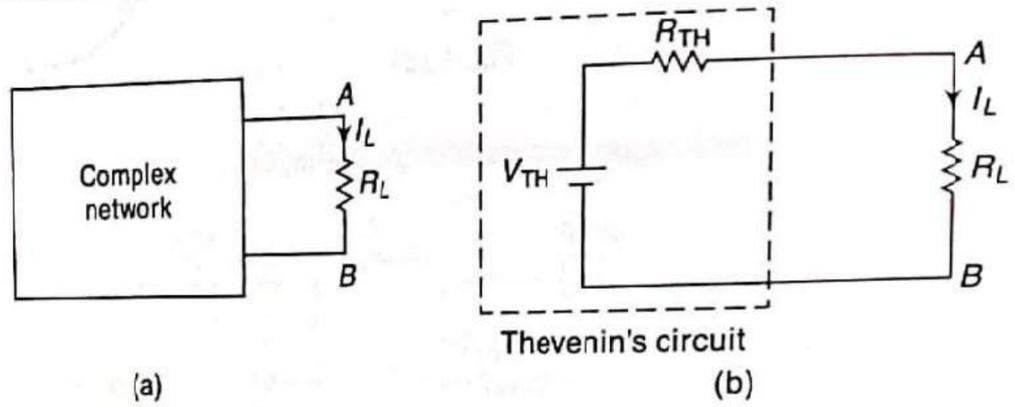

Fig. 1.256 Thevenin's equivalent circuit

Hence, Thevenin's theorem as applied to dc circuits may be stated as under:
Any network having terminals A and B can be replaced by a single source of emf V_{TH} (called Thevenin voltage) in series with a single resistance R_{TH} (called Thevenin resistance).

(i) The emf V_{TH} is the voltage obtained across terminals A and B with load, if any, removed, i.e., it is open-circuited voltage between A and B.

(ii) The resistance R_{TH} is the resistance of the network measured between A and B with load removed and replacing all the voltage/current sources by their internal resistances[4].

Illustration

The concept of Thevenin's equivalent circuit across the load terminals can be explained by considering the circuit shown in Fig. 1.257(a). The Thevenin's equivalent circuit is shown in Fig. 1.257(b).

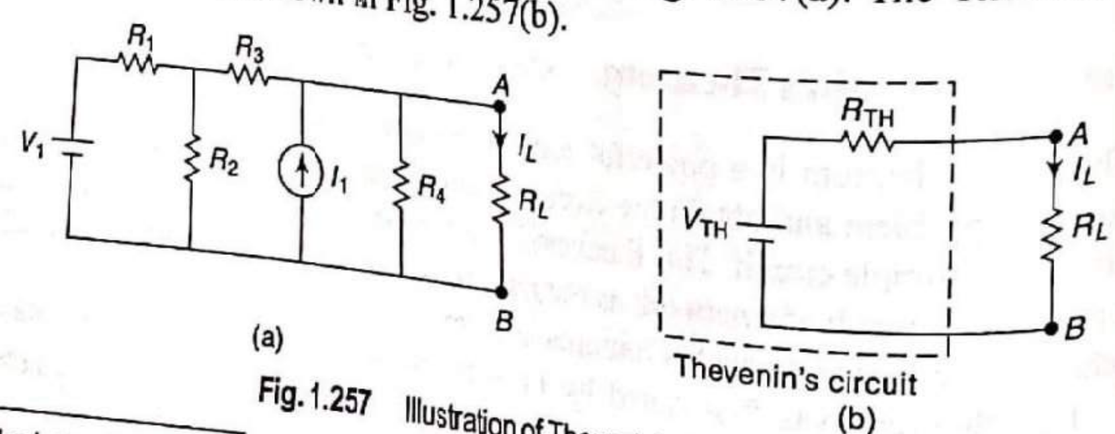

Fig. 1.257 Illustration of Thevenin's theorem

[4]The internal resistance of an ideal voltage source is zero and that of an ideal current source is infinite. Hence, while finding out R_{TH}, voltage sources are replaced by short circuits and current sources by open circuits.

The voltage V_{TH} is obtained across the terminals A and B with R_L removed. Hence, V_{TH} is also called open circuit Thevenin's voltage. The circuit to be used to calculate V_{TH} is shown in Fig. 1.258(a). While R_{TH} is the equivalent resistance obtained as viewed through the terminals A and B with R_L removed and replacing voltage source with short circuit and current source by open circuit as shown in Fig. 1.258(b).

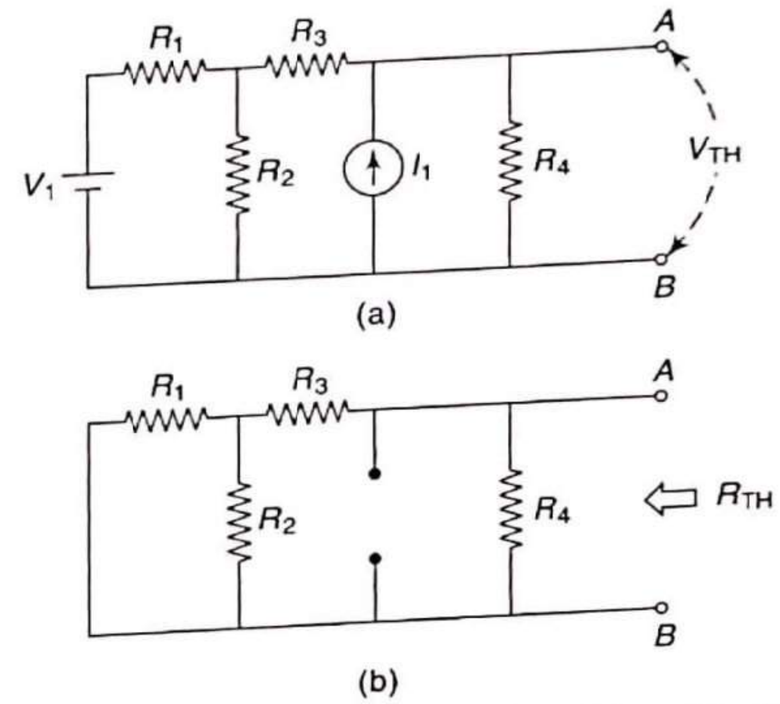

Fig. 1.258 Thevenin's voltage and Thevenin's resistance

While obtaining V_{TH}, any of the network simplification techniques can be used. When the circuit is replaced by Thevenin's equivalent across the load resistance, the load current can be obtained as

$$I_L = \frac{V_{TH}}{R_L + R_{TH}}$$

Steps to apply Thevenin's Theorem

Step 1: Remove the branch resistance through which current is to be calculated.

Step 2: Calculate the voltage across these open circuited terminals, by using any one of the network simplification techniques. This is V_{TH}.

Step 3: Calculate R_{TH} as viewed through the two terminals of the branch from which current is to be calculated by removing that branch resistance and replacing all sources by their internal resistances.

Step 4: Draw the Thevenin's equivalent circuit showing source V_{TH} with the resistance R_{TH} in series with it.

Step 5: Reconnect the branch resistance. Let it be R_L. The required current through the branch is given by

$$I_L = \frac{V_{TH}}{R_L + R_{TH}}$$

Example 1.70 Determine the current through 5 Ω resistor in the network shown in Fig. 1.259 by Thevenin's theorem.

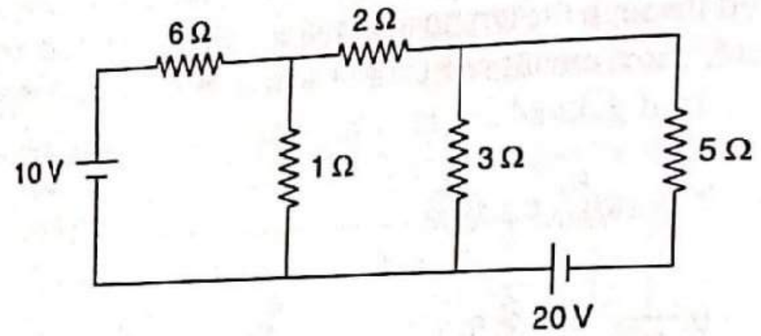

Fig. 1.259

Solution

Current through 5 Ω resistor is required. This resistance can be called load resistance R_L. Its terminals A and B are called load terminals.

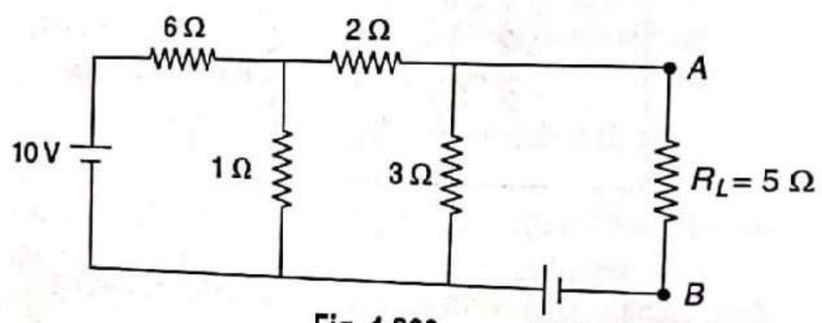

Fig. 1.260

Step I: Calculation of V_{TH}

Removing the load resistance from the network, we get the following network:

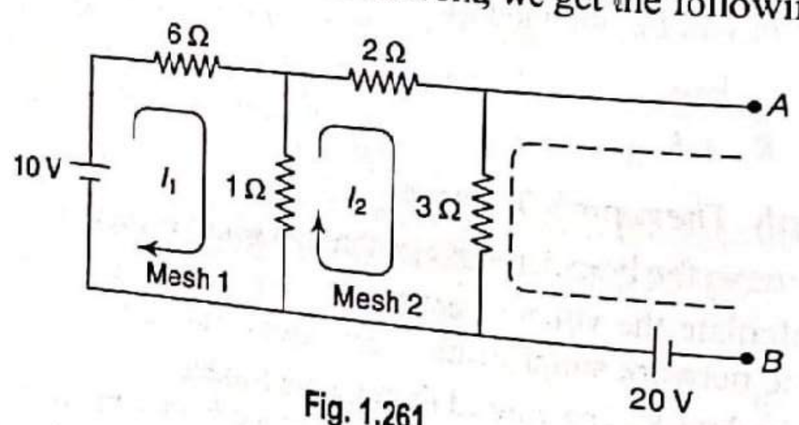

Fig. 1.261

In Fig. 1.261, voltage appears across the load terminals A and B, which is called Thevenin's voltage V_{TH}. The voltage V_{TH}, i.e., V_{AB}, can be calculated as follows:

Select any path from A to B and marked the selected path by dotted line as shown in Fig. 1.261. By using any circuit simplification techniques, calculate the current through all the resistances present in the selected path. Then travel through the selected path from B to A and add all voltage drops and emf's algebraically.

In Fig. 1.261, 3 Ω resistor is present in the selected path, and for calculation of V_{TH}, current through the 3 Ω resistor is required. By using mesh analysis, $I_{3\Omega}$ can be calculated.

Applying KVL to mesh 1,

$$-6I_1 - (I_1 - I_2) + 10 = 0$$

or $$7I_1 - I_2 = 10 \quad \text{(i)}$$

Applying KVL to mesh 2,

$$-2I_2 - 3I_2 - (I_2 - I_1) = 0$$

or $$I_1 - 6I_2 = 0 \quad \text{(ii)}$$

Solving (i) and (ii),

$$I_2 = 0.244 \text{ A}$$

Hence, $I_{3\Omega} = 0.244$ A (↓)

Thus, $V_{TH} = V_{AB}$

$$= 20 + 3I_2$$
$$= 20 + 3(0.244)$$
$$= 20.732 \text{ V}$$

Step II: Calculation of R_{TH}

Removing the load resistance from the network and replacing the voltage sources by short circuit, we get the following network:

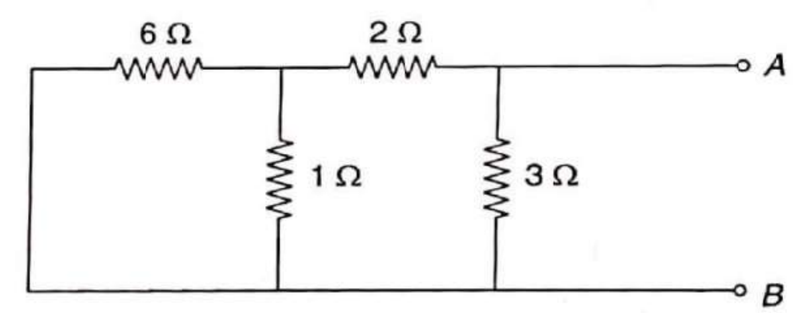

Fig. 1.262

In Fig. 1.262, equivalent resistance across the load terminals A and B is called Thevenin's resistance R_{TH}. By series-parallel circuit reduction techniques, we obtain the circuit as shown below:

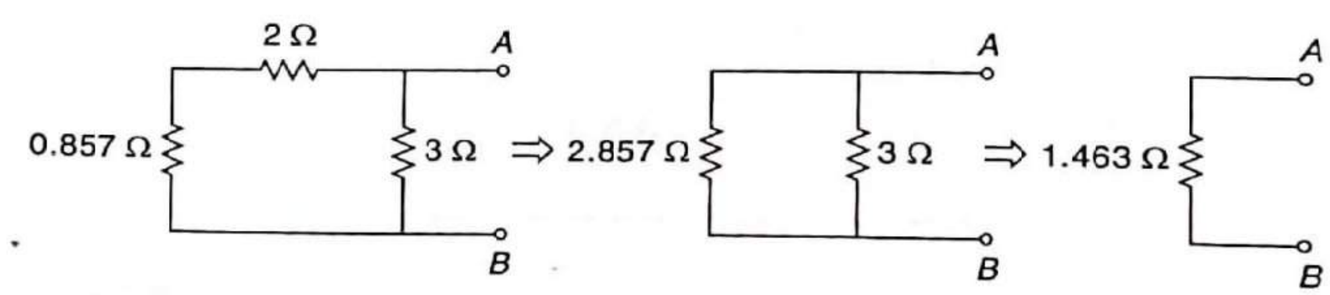

Fig. 1.263

Thus, $R_{TH} = R_{AB} = 1.463$ Ω.

Step III: Calculation of load current

Thevenin's equivalent circuit can be drawn as follows:

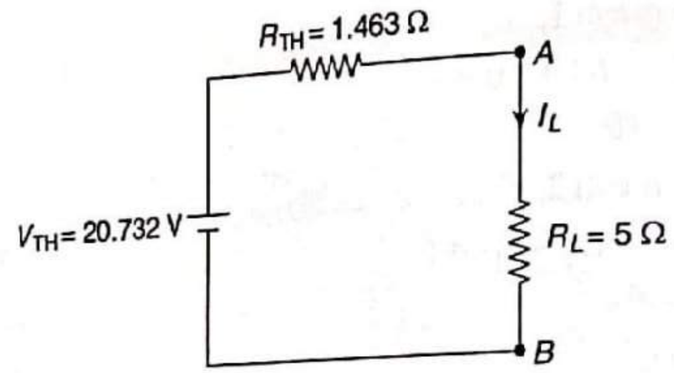

Fig. 1.264

By Ohm's law,

$$I_L = \frac{V_{TH}}{R_L + R_{TH}}$$

Hence, $I_L = I_{5\Omega} = \dfrac{20.732}{5+1.463} = 3.21\ \text{A}(\downarrow)$

Example 1.71 Determine the current through 1.5 Ω resistor in the network shown in Fig. 1.265 by Thevenin's theorem.

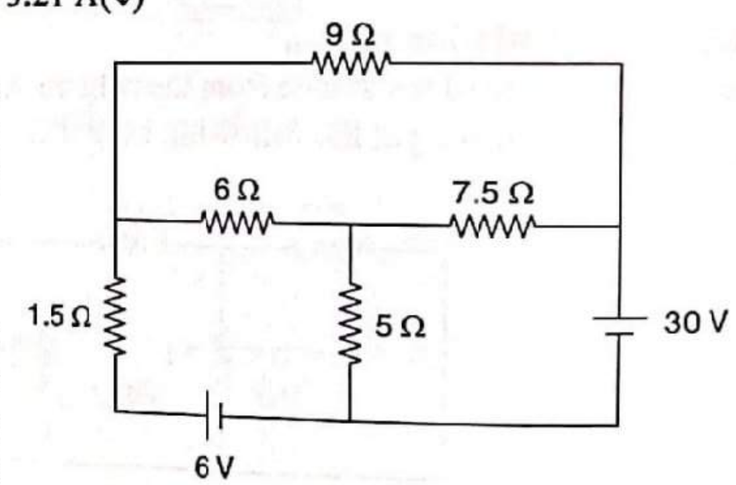

Fig. 1.265

Solution

Current through 1.5 Ω resistor is required. This resistance can be called load resistance R_L. Its terminals A and B are called load terminals.

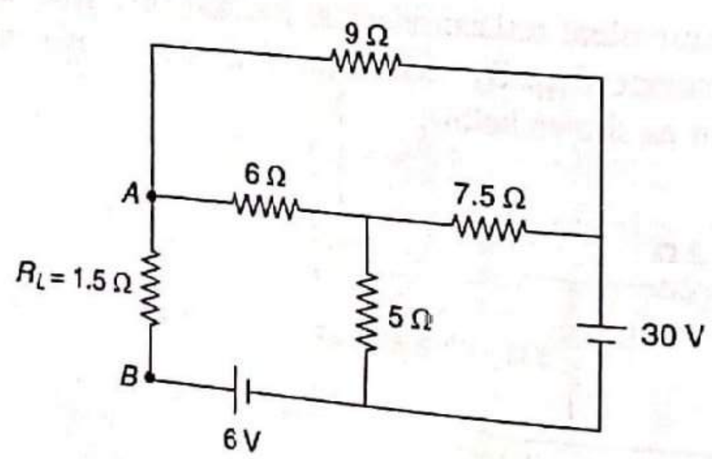

Fig. 1.266

Step I: Calculation of V_{TH}

Removing the load resistance from the network, we get the circuit as shown in Fig. 1.267.

In Fig. 1.267, voltage appears across the load terminals A and B, which is called

Thevenin's voltage V_{TH}. For calculation of V_{TH}, i.e., V_{AB}, the selected path from A to B is marked by dotted line in Fig. 1.267. As this path contains the resistors 5 Ω and 6 Ω, currents through these resistances are required. By using mesh analysis, these required currents can be calculated.

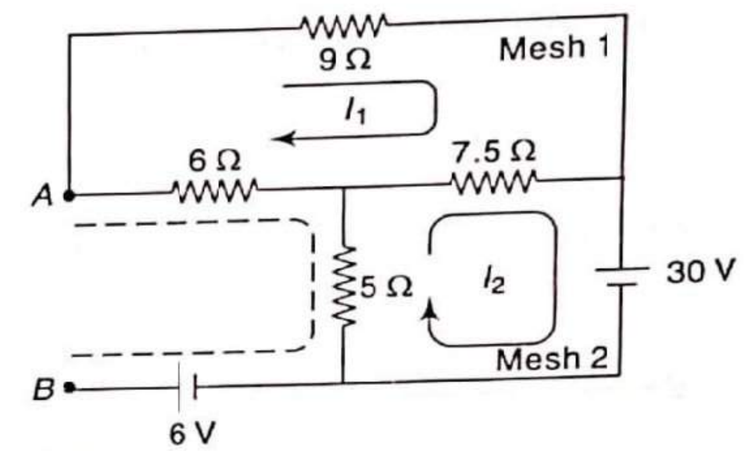

Fig. 1.267

Applying KVL to mesh 1,

$$-9I_1 - 7.5(I_1 - I_2) - 6I_1 = 0$$

or $\quad -22.5I_1 + 7.5I_2 = 0 \qquad$ (i)

Applying KVL to mesh 2,

$$-7.5(I_2 - I_1) - 30 - 5I_2 = 0$$

or $\quad 7.5I_1 - 12.5I_2 = 30 \qquad$ (ii)

Solving (i) and (ii),

$$I_1 = -1\ \text{A}, \qquad I_2 = -3\ \text{A}$$

Hence, $V_{TH} = V_{AB}$

$$= -6 - 5I_2 - 6I_1$$
$$= -6 - 5(-3) - 6(-1)$$
$$= 15\ \text{V}$$

Step II: Calculation of R_{TH}

Removing the load resistance from the network and replacing the voltage sources by short circuits, we get the circuit as shown in Fig. 1.268.

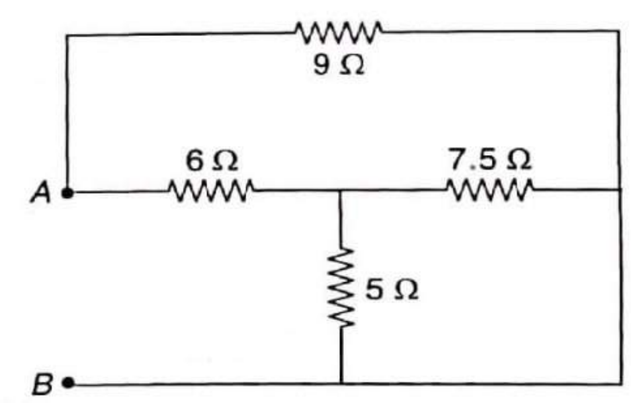

Fig. 1.268

In Fig. 1.268, equivalent resistance across the load terminals A and B is called Thevenin's resistance R_{TH}. The circuit can be redrawn as shown in Fig. 1.269.

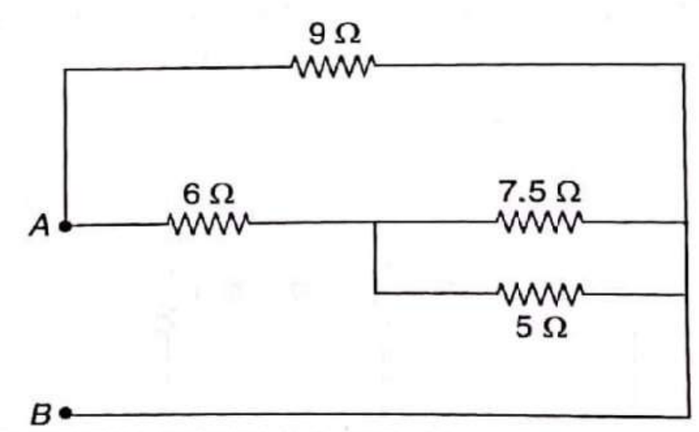

Fig. 1.269

By series-parallel circuit reduction techniques, we get the following circuit:

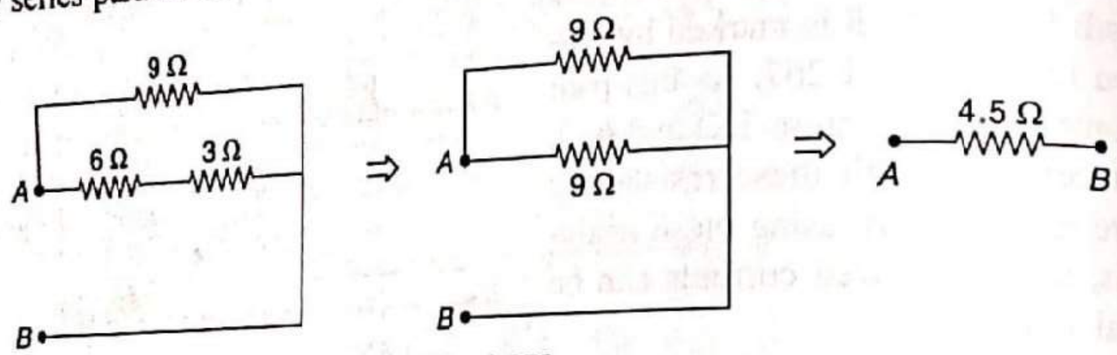

Fig. 1.270

Thus, $R_{TH} = R_{AB} = 4.5\ \Omega$

Step III: Calculation of load current

Thevenin's equivalent circuit can be drawn as shown in Fig. 1.271.

By Ohm's law,

$$I_L = \frac{V_{TH}}{R_L + R_{TH}}$$

Hence, $I_L = I_{1.5\Omega} = \dfrac{15}{1.5 + 4.5} = 2.5\ \text{A}(\downarrow)$

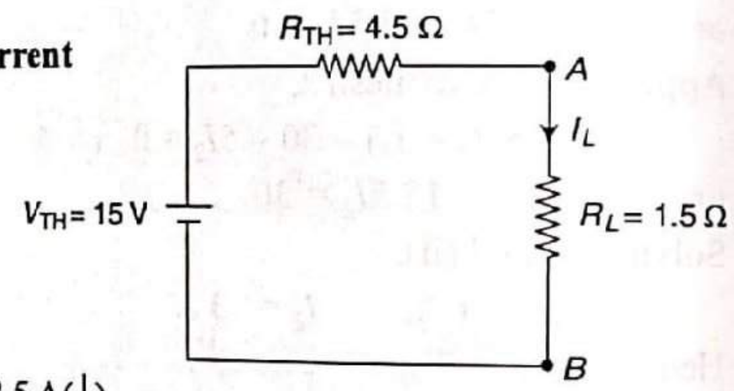

Fig. 1.271

Example 1.72 Determine the current through 8 Ω resistor in the network shown in Fig. 1.272 by Thevenin's theorem.

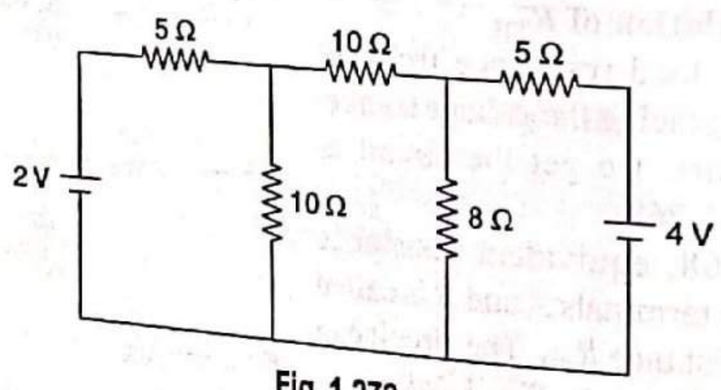

Fig. 1.272

Solution

Current through 8 Ω resistor is required. This resistance can be called load resistance R_L. Its terminals A and B are called load terminals.

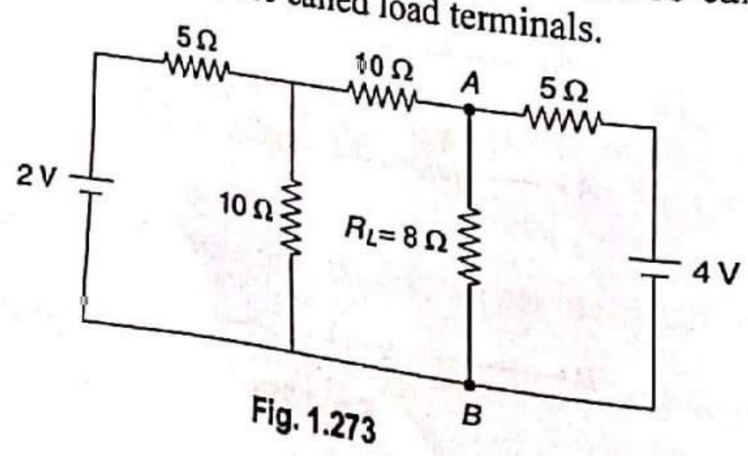

Fig. 1.273

Step I: Calculation of V_{TH}

Removing the load resistance from the network, we get the following network:

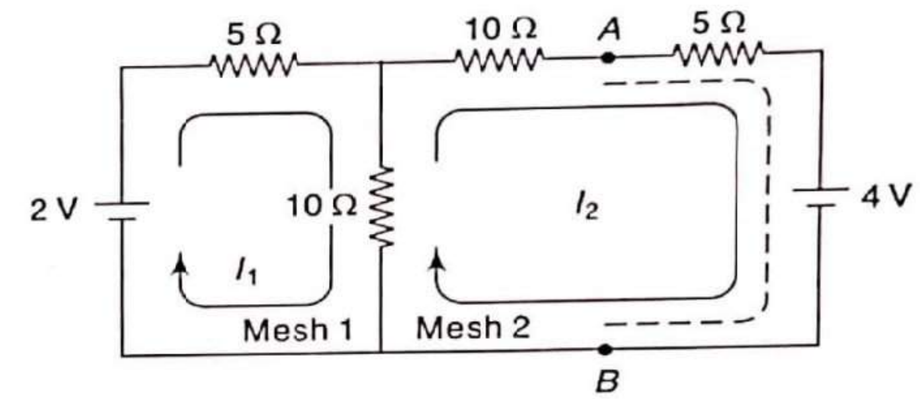

Fig. 1.274

In Fig. 1.274, voltage appears across the load terminals A and B, which is called Thevenin's voltage V_{TH}. For calculation of V_{TH}, i.e., V_{AB}, the selected path from A to B is marked by dotted line in Fig. 1.274. As this path contains the resistor 5 Ω, current through this resistance is required. By using mesh analysis, this required current can be calculated as follows.

Applying KVL to mesh 1,

$$-5I_1 - 10(I_1 - I_2) + 2 = 0$$

or $\quad -15I_1 + 10I_2 = -2 \qquad$ (i)

Applying KVL to mesh 2,

$$-10I_2 - 5I_2 - 4 - 10(I_2 - I_1) = 0$$

or $\quad 10I_1 - 25I_2 = 4 \qquad$ (ii)

Solving (i) and (ii),

$$I_2 = -0.145\ \text{A}$$

Hence, $V_{TH} = V_{AB}$

$$= +4 + 5I_2$$
$$= +4 + 5\,(-0.145)$$
$$= 3.275\ \text{V}$$

Step II: Calculation of R_{TH}

Removing the load resistance from the network and replacing the voltage sources by short circuit, we get the following circuit:

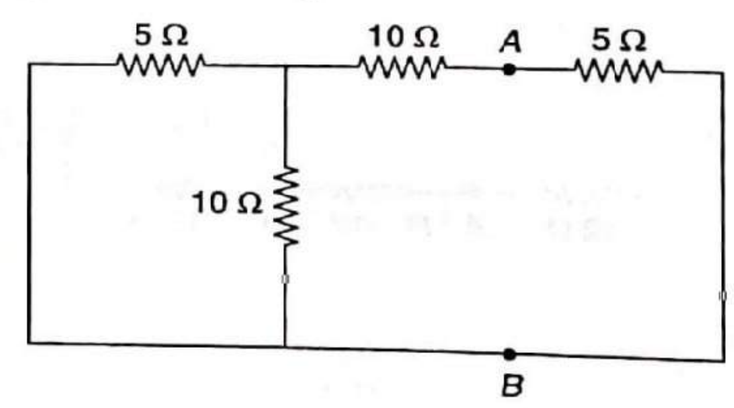

Fig. 1.275

In Fig. 1.275, equivalent resistance across the load terminals A and B is called Thevenin's resistance R_{TH}. By series-parallel circuit reduction techniques, we modify the circuit as shown below:

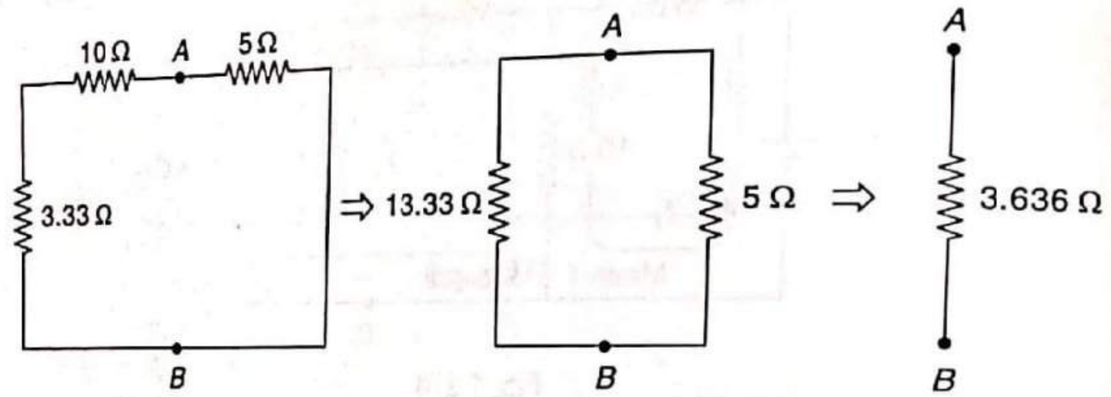

Fig. 1.276

Thus, $R_{TH} = R_{AB} = 3.636\ \Omega$

Step III: Calculation of load current

Thevenin's equivalent circuit can be drawn as shown in Fig. 1.277.

By Ohm's law,

$$I_L = \frac{V_{TH}}{R_L + R_{TH}}$$

Hence, $I_L = I_{8\Omega} = \dfrac{3.275}{8+3.636} = 0.281\ \text{A}(\downarrow)$

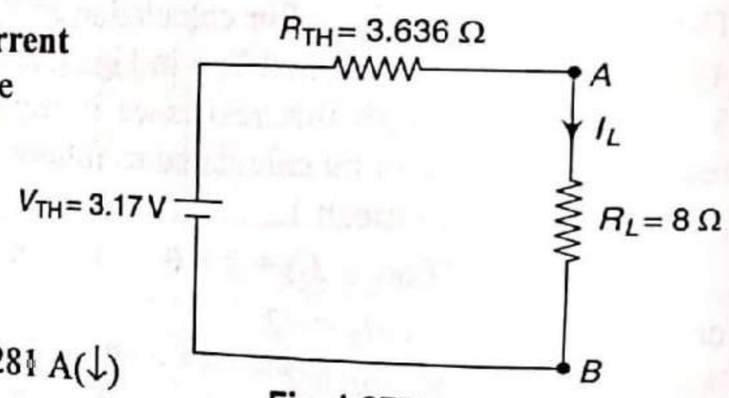

Fig. 1.277

Example 1.73 Determine the current through 10 Ω resistor in the network shown in Fig. 1.278 by Thevenin's theorem.

Solution

Current through 10 Ω resistor is required. This resistance can be called load resistance R_L. Its terminals A and B are called load terminals.

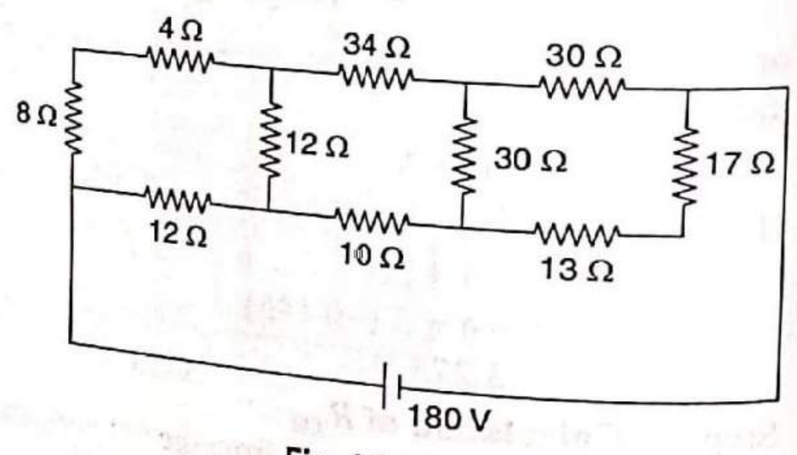

Fig. 1.278

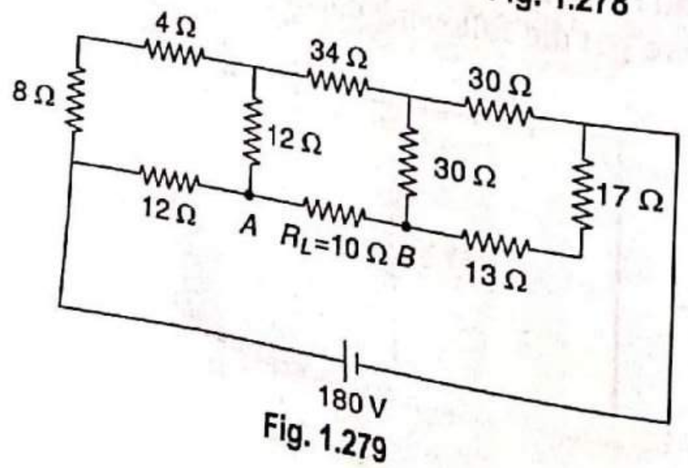

Fig. 1.279

Step I: Calculation of V_{TH}

Removing the load resistance from the network, we get the following modified network:

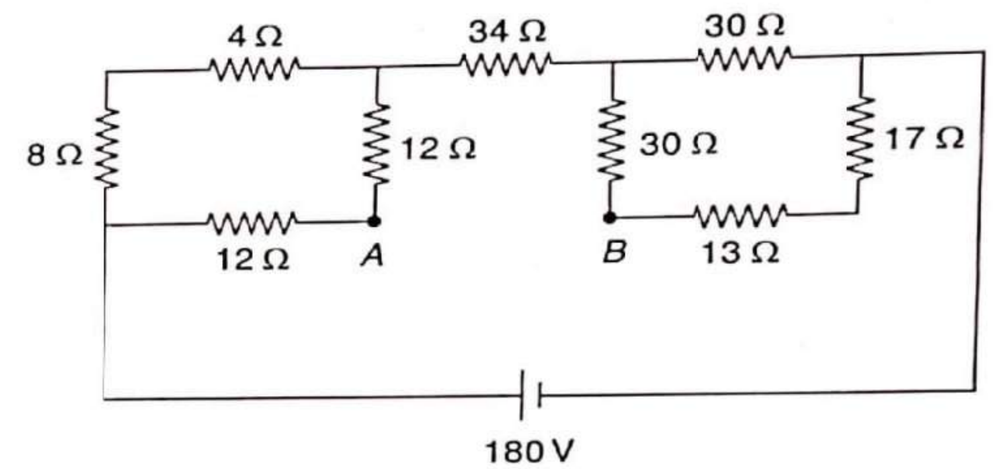

Fig. 1.280

In Fig. 1.280, resistors 8 Ω and 4 Ω are in series. Also resistors 17 Ω and 13 Ω are in series.

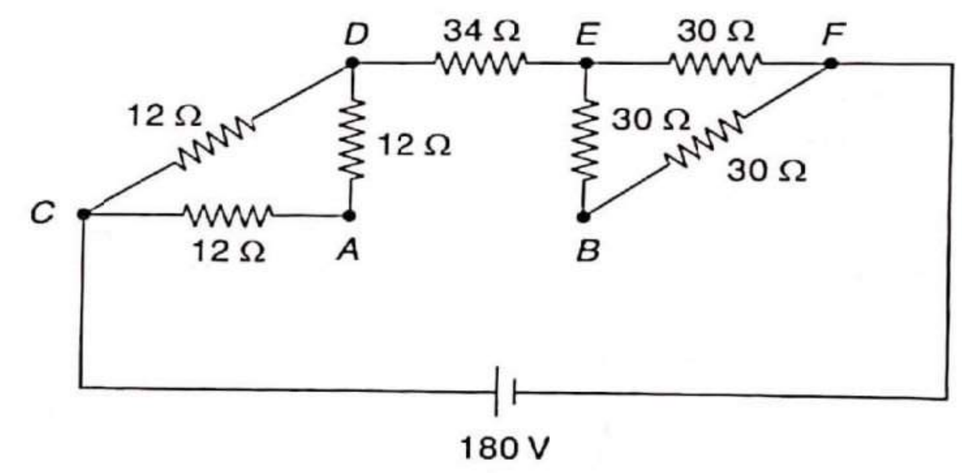

Fig. 1.281

Converting the delta connections formed by three 12 Ω resistors (Δ CDA) and three 30 Ω resistors (Δ EFB) into equivalent star connections, i.e., Δ $CDA \Rightarrow Y\ CDA$ and Δ $EFB \Rightarrow Y\ EFB$, we get the circuit as shown in Fig. 1.282.

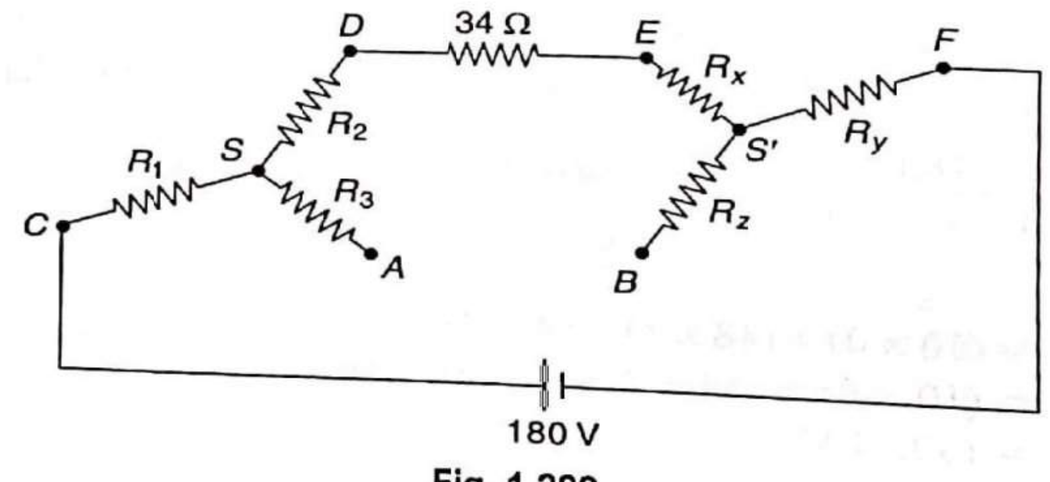

Fig. 1.282

$$R_1 = R_2 = R_3 = \frac{12 \times 12}{12+12+12} = 4\ \Omega$$

$$R_x = R_y = R_z = \frac{30 \times 30}{30+30+30} = 10\ \Omega$$

The simplified network is shown in Fig. 1.283.

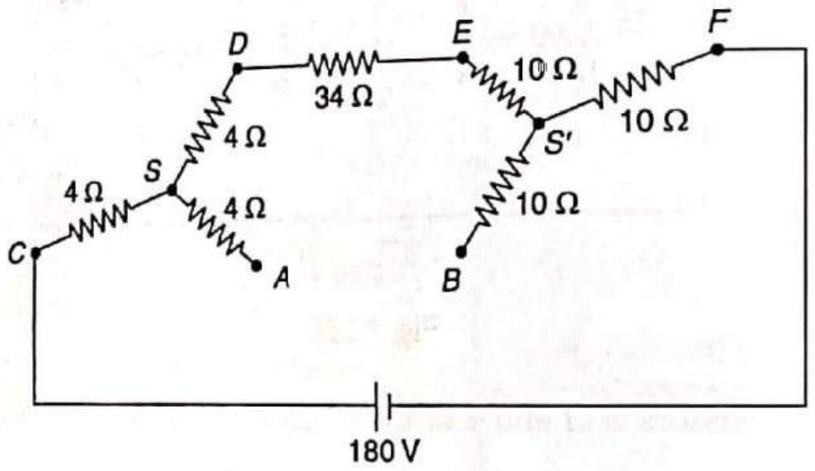

Fig. 1.283

In branch $SDES'$, 4 Ω, 34 Ω, and 10 Ω resistors are in series. Let the current delivered by the battery is I A.

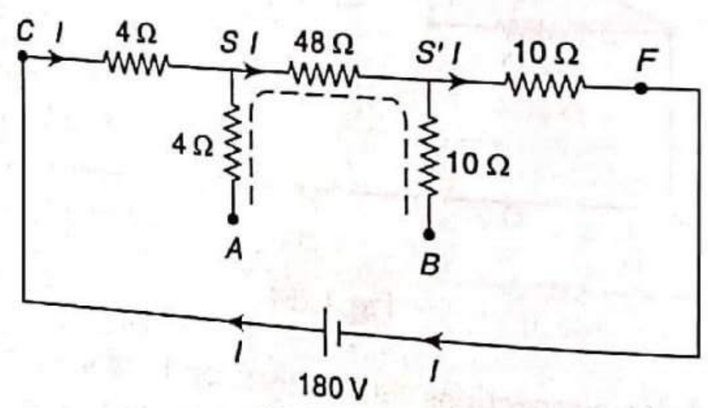

Fig. 1.284

For calculation of V_{TH}, i.e., V_{AB}, the selected path from A to B is marked by dotted line in Fig. 1.284. As branch SA and branch $S'B$ are open circuited, $I_{SA} = 0$ and $I_{S'B} = 0$. By using Ohm's law, total circuit current I can be calculated as

$$I = \frac{180}{4+48+10} = \frac{180}{62} = 2.903 \text{ A}$$

Hence, $V_{TH} = V_{AB}$

$$= (10 \times 0) + (48 \times I) + (4 \times 0)$$
$$= (10 \times 0) + (48 \times 2.903) + (4 \times 0)$$
$$= 139.34 \text{ V}$$

Step II: Calculation of R_{TH}

Removing the load resistance from the network and replacing the voltage source by short circuit, we get the following network:

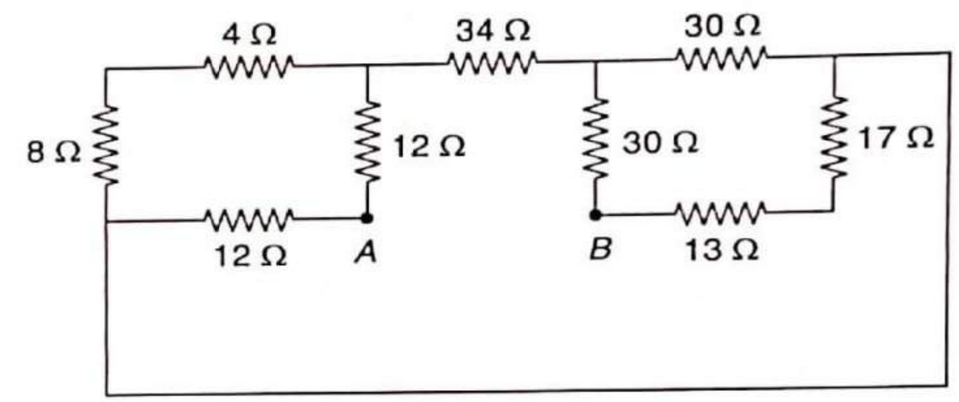

Fig. 1.285

In Fig. 1.285, equivalent resistance across the load terminals A and B is called Thevenin's resistance R_{TH}.

In Fig. 1.285, 8 Ω and 4 Ω resistors are in series. Also 17 Ω and 13 Ω resistors are in series.

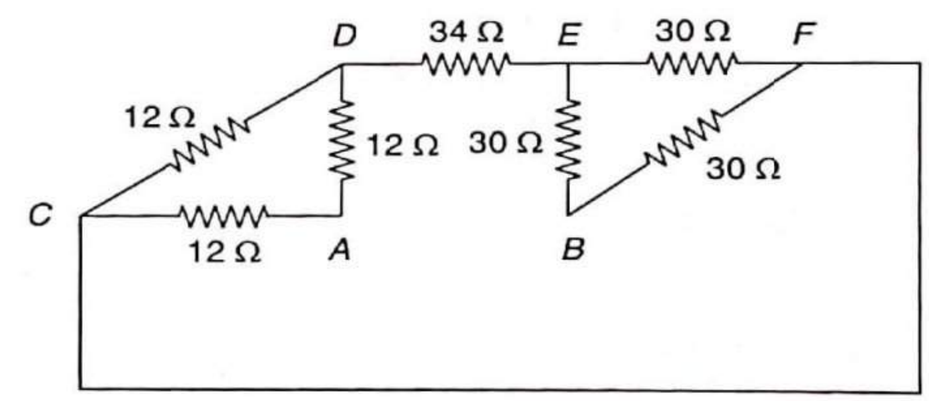

Fig. 1.286

Converting the delta connections formed by three 12 Ω resistors (Δ CDA) and three 30 Ω resistors (Δ EFB) into equivalent star network, i.e. Δ $CDA \Rightarrow Y\,CDA$ and Δ $EFB \Rightarrow Y\,EFB$, we get the network as shown in Fig. 1.287.

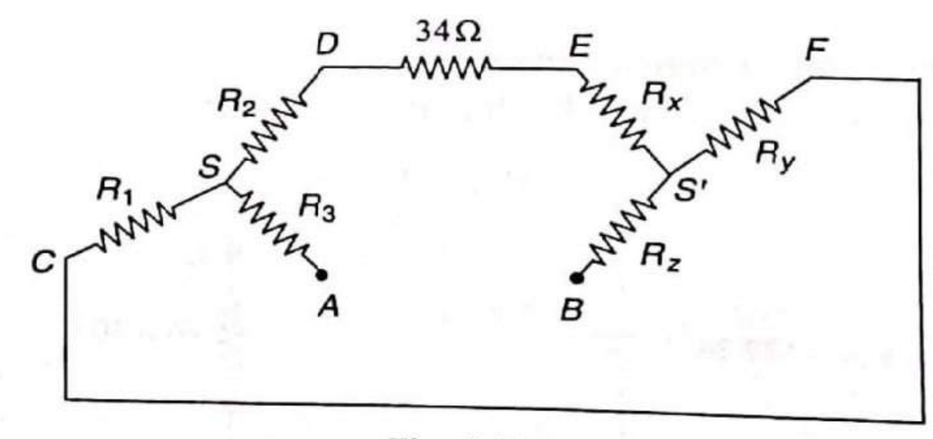

Fig. 1.287

$$R_1 = R_2 = R_3 = \frac{12 \times 12}{12+12+12} = 4\ \Omega$$

$$R_x = R_y = R_z = \frac{30 \times 30}{30+30+30} = 10\ \Omega$$

The simplified network is shown in Fig. 1.288.

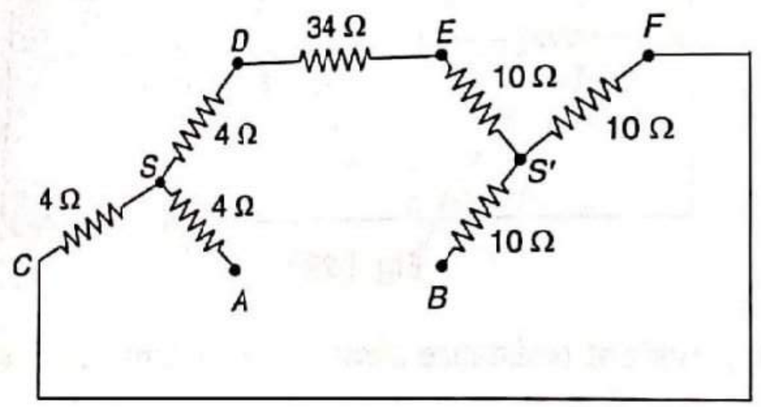

Fig. 1.288

In branch $SDES'$, 4 Ω, 34 Ω, and 10 Ω are in series. Also in branch $SCFS'$, 4 Ω and 10 Ω resistors are in series.

In Fig. 1.289, 48 Ω and 14 Ω resistors are in parallel.

Thus, $R_{TH} = R_{AB} = 24.84\ \Omega$.

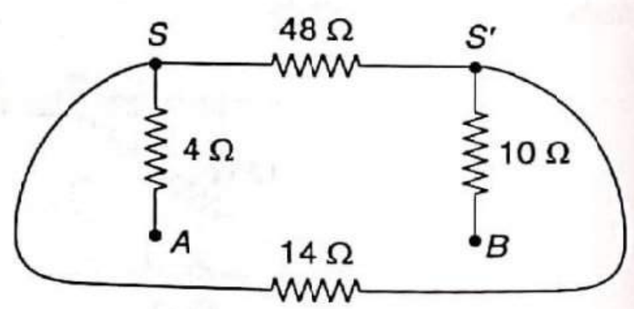

Fig. 1.289

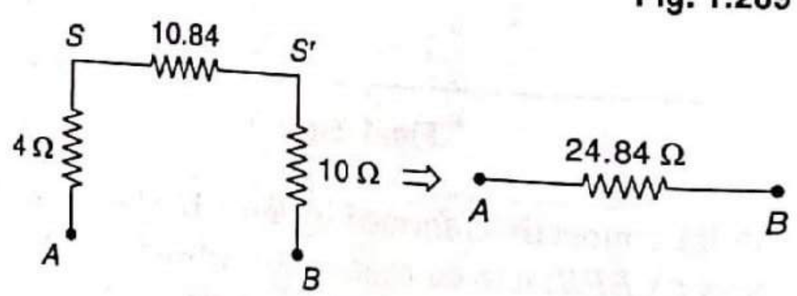

Fig. 1.290

Step III: Calculation of load current

Thevenin's equivalent circuit can be drawn as shown in Fig. 1.291.

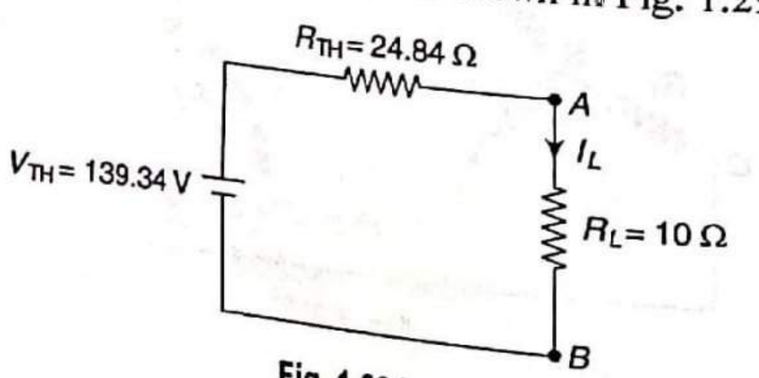

Fig. 1.291

By Ohm's law,

$$I_L = \frac{V_{TH}}{R_L + R_{TH}}$$

Hence, $I_L = I_{10\Omega} = \dfrac{139.34}{10 + 24.84} = 4\ \text{A}(\rightarrow)$

Example 1.74 Using Thevenin's theorem, obtain the power drawn by 20 Ω resistor in the network shown in Fig. 1.292.

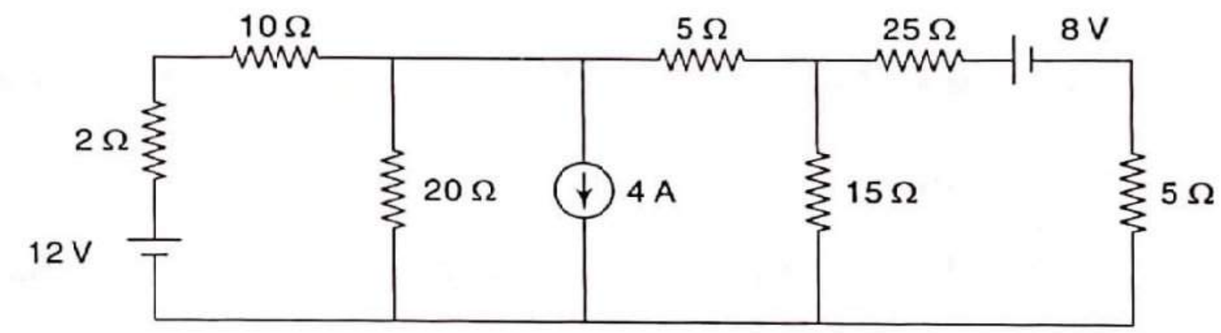

Fig. 1.292

Solution

Power drawn by 20 Ω resistor can be calculated as $P_{20\Omega} = I_{20\Omega}^2 \times 20$. Thus, current through 20 Ω resistor is required. This resistance can be called load resistance R_L. Its terminals A and B are called load terminals.

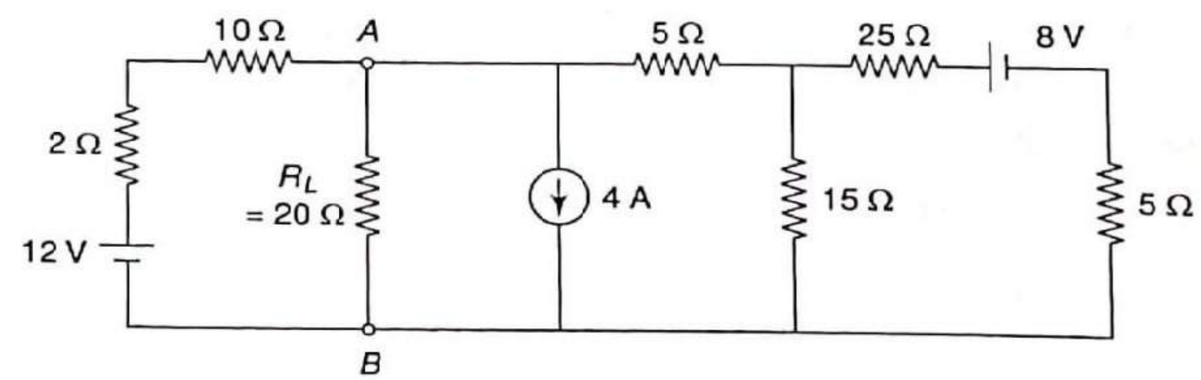

Fig. 1.293

Step I: Calculation of V_{TH}

Removing the load resistance from the network, we get the following network:

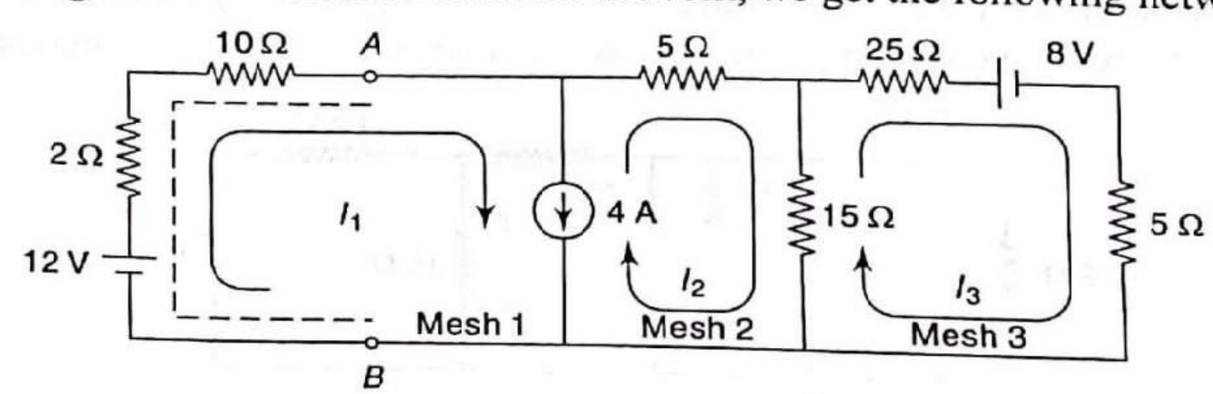

Fig. 1.294

In Fig. 1.294, voltage appears across the load terminals A and B, which is called Thevenin's voltage V_{TH}. For calculation of V_{TH}, i.e., V_{AB}, the selected path from A to B is marked by dotted line in Fig. 1.294. As this path contains the resistors 2 Ω and 10 Ω, currents through these resistances are required. By using mesh analysis, these required currents can be calculated.

Mesh 1 and mesh 2 form a supermesh.

By expressing the current in the common branch, we get the current equation as

$$(I_1 - I_2) = 4 \qquad \text{(i)}$$

By applying the KVL to the supermesh, we get the voltage equation as

$$-10I_1 - 5I_2 - 15(I_2 - I_3) + 12 - 2I_1 = 0$$

or $$-12I_1 - 20I_2 + 15I_3 = -12 \qquad \text{(ii)}$$

Now, by applying the KVL to mesh 3 (which does not contain any current source), we have

$$-25I_3 - 8 - 5I_3 - 15(I_3 - I_2) = 0$$

or $$15I_2 - 45I_3 = 8 \qquad \text{(iii)}$$

The value of I_1 may be found by solving the above three simultaneous equations or by the method of determinants as given below.

Putting the above three equations in matrix form, we have

$$\begin{bmatrix} 1 & -1 & 0 \\ -12 & -20 & 15 \\ 0 & 15 & -45 \end{bmatrix} \begin{bmatrix} I_1 \\ I_2 \\ I_3 \end{bmatrix} = \begin{bmatrix} 4 \\ -12 \\ 8 \end{bmatrix}$$

So, $$\Delta = \begin{vmatrix} 1 & -1 & 0 \\ -12 & -20 & 15 \\ 0 & 15 & -45 \end{vmatrix} = 1215, \quad \Delta_1 = \begin{vmatrix} 4 & -1 & 0 \\ -12 & -20 & 15 \\ 8 & 15 & -45 \end{vmatrix} = 3120$$

By Cramer's rule,

$$I_1 = \frac{\Delta_1}{\Delta} = \frac{3120}{1215} = 2.57 \text{ A}$$

Hence, $$V_{TH} = V_{AB}$$
$$= 12 - 2I_1 - 10I_1$$
$$= 12 - 2(2.57) - 10(2.57)$$
$$= -18.84 \text{ V}$$

Step II: Calculation of R_{TH}

Removing the load resistance from the network and replacing the voltage sources by short circuit and current source by open circuit, we get the following circuit:

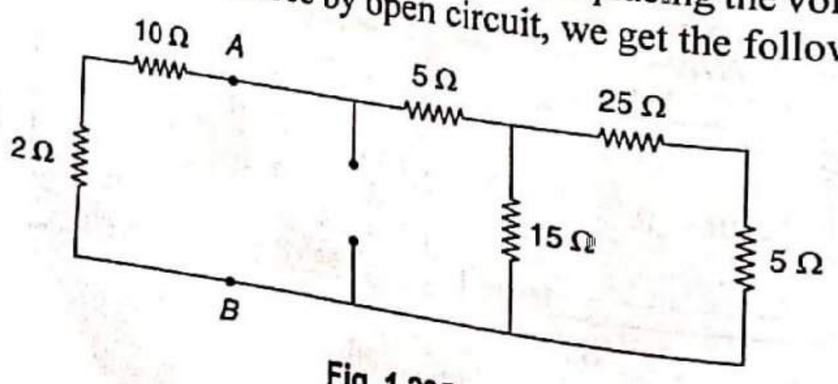

Fig. 1.295

In Fig. 1.295, equivalent resistance across the load terminals A and B is called Thevenin's resistance R_{TH}. In Fig. 1.296, 10 Ω and 2 Ω resistors are in series. Also 25 Ω and 5 Ω resistors are in series.

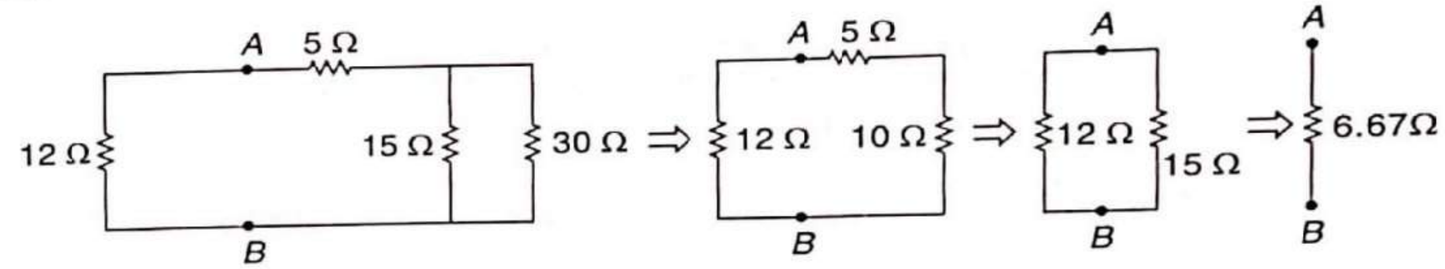

Fig. 1.296

Thus, $R_{TH} = R_{AB} = 6.67$ Ω.

Step III: Calculation of load current

Thevenin's equivalent circuit can be drawn as shown below:

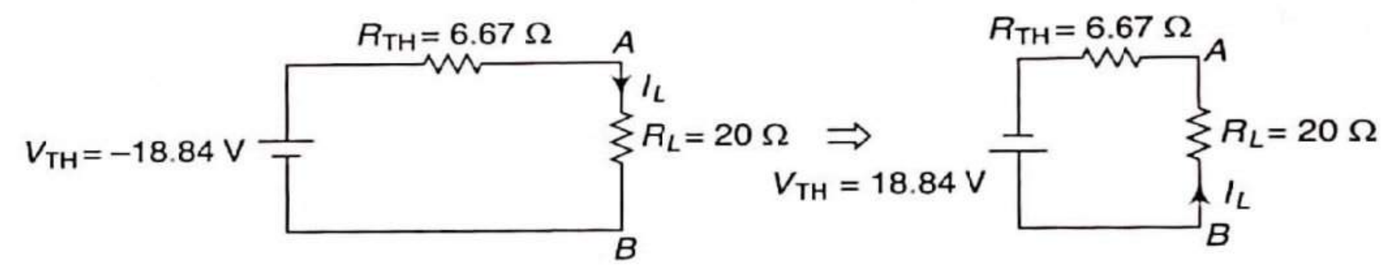

Fig. 1.297

By Ohm's law,

$$I_L = \frac{V_{TH}}{R_L + R_{TH}}$$

Hence, $$I_L = I_{20\Omega} = \frac{18.84}{20 + 6.67} = 0.706 \text{ A}(\uparrow)$$

Power drawn by 20 Ω resistor,

$$P_{20\Omega} = I_{20\Omega}^2 \times 20 = (0.706)^2 \times 20 = 9.97 \text{ W}$$

Example 1.75 Determine Thevenin's equivalent circuit and hence, find the current through 30 Ω resistor in the network shown in Fig. 1.298.

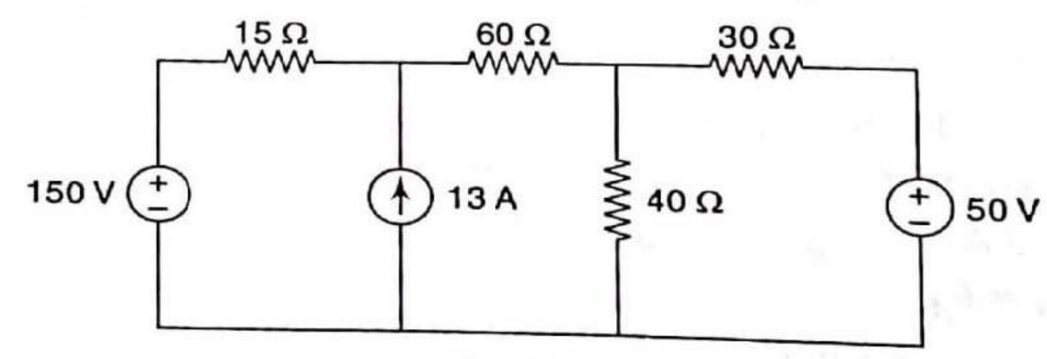

Fig. 1.298

Solution

Current through 30 Ω resistor is required. This resistance can be called load resistance R_L. Its terminals A and B are called load terminals.

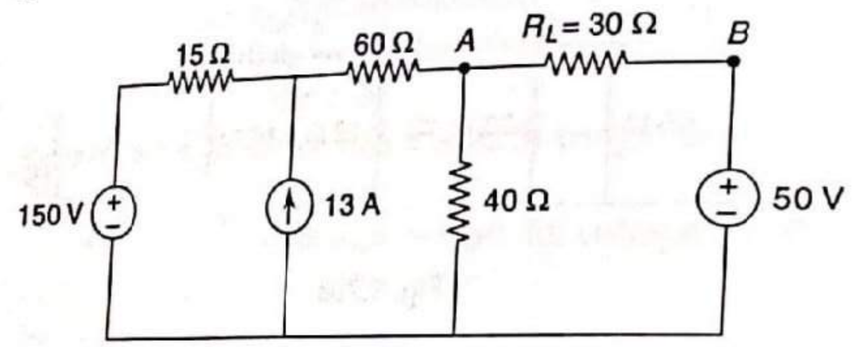

Fig. 1.299

Step I: Calculation of V_{TH}

Removing the load resistance from the network, we get the following modified network:

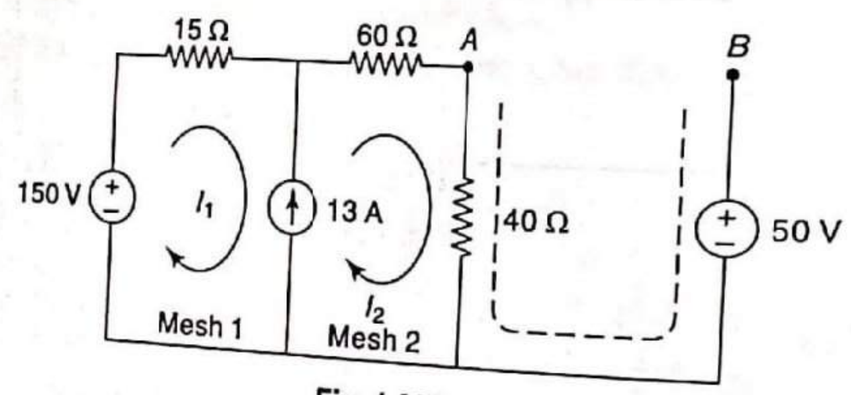

Fig. 1.300

In Fig. 1.300, voltage appears across the load terminals A and B, which is called Thevenin's voltage V_{TH}. For calculation of V_{TH}, i.e., V_{AB}, the selected path from A to B is marked by dotted line in Fig. 1.300. As this path contains the 40 Ω resistor, current through this resistance is required. By using mesh analysis, this required current can be calculated.

Mesh 1 and mesh 2 form a supermesh.

By expressing the current in the common branch, we get the current equation as

$$(I_2 - I_1) = 13 \qquad \text{(i)}$$

By applying the KVL to the supermesh, we get the voltage equation as

$$-15I_1 - 60I_2 - 40I_2 + 150 = 0$$

or

$$-15I_1 - 100I_2 = -150 \qquad \text{(ii)}$$

Solving Eqs (i) and (ii),

$$I_2 = 3\text{ A}$$

Hence,

$$V_{TH} = V_{AB}$$
$$= -50 + 40I_2$$
$$= -50 + 40(3)$$
$$= 70\text{ V}$$

Step II: Calculation of R_{TH}

Removing the load resistance from the network and replacing the voltage sources by short circuit and current source by open circuit, we get the circuit as shown in Fig. 1.301.

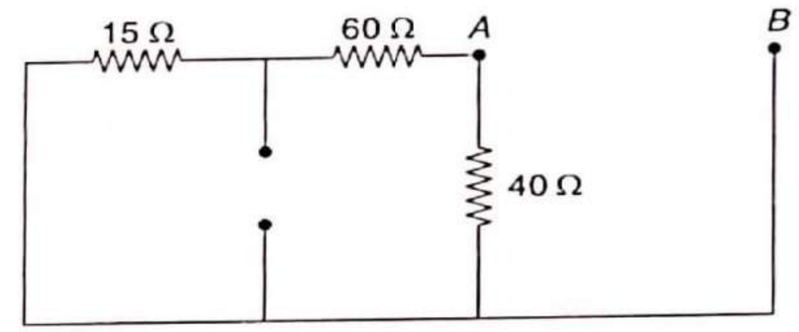

Fig. 1.301

In Fig. 1.301, equivalent resistance across the load terminals A and B is called Thevenin's resistance R_{TH}. In Fig. 1.301, resistors 60 Ω and 15 Ω are in series.

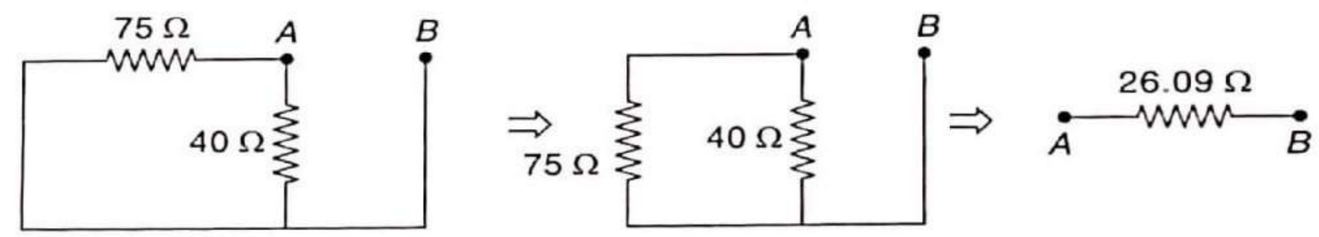

Fig. 1.302

Thus, $R_{TH} = R_{AB} = 26.09\ \Omega$.

Step III: Calculation of load current

Thevenin's equivalent circuit can be drawn as shown in Fig. 1.303.

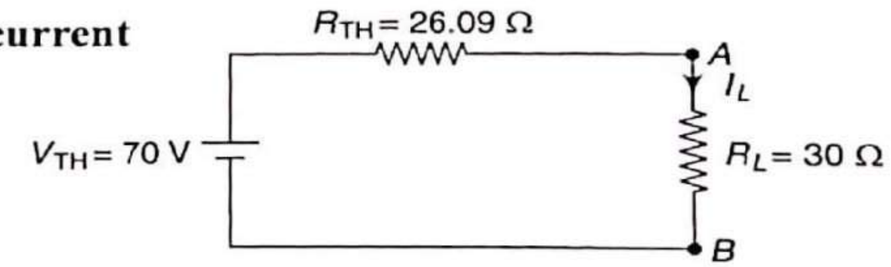

Fig. 1.303

By Ohm's law,

$$I_L = \frac{V_{TH}}{R_L + R_{TH}}$$

Hence, $I_L = I_{30\Omega} = \dfrac{70}{30 + 26.09} = 1.248\text{ A}(\rightarrow)$

Example 1.76 Find the current in R_L in the network shown in Fig. 1.304, when R_L takes up values 5 Ω, 10 Ω, and 20 Ω.

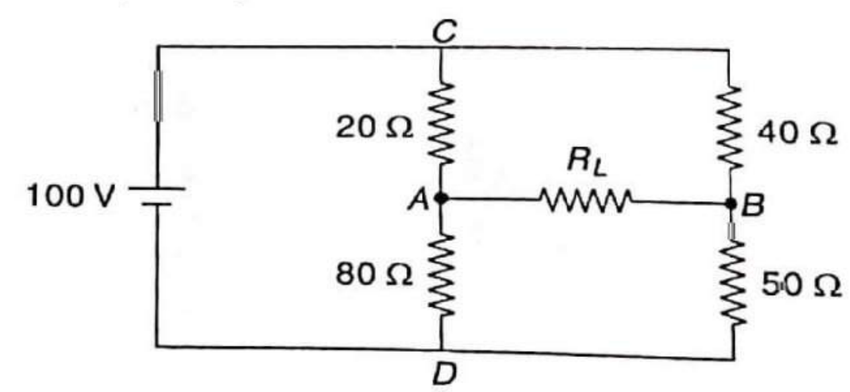

Fig. 1.304

Solution

Step I: Calculation of V_{TH}

Current through R_L is required. Its terminals A and B are called load terminals. Removing the load resistance from the network, we get the following network:

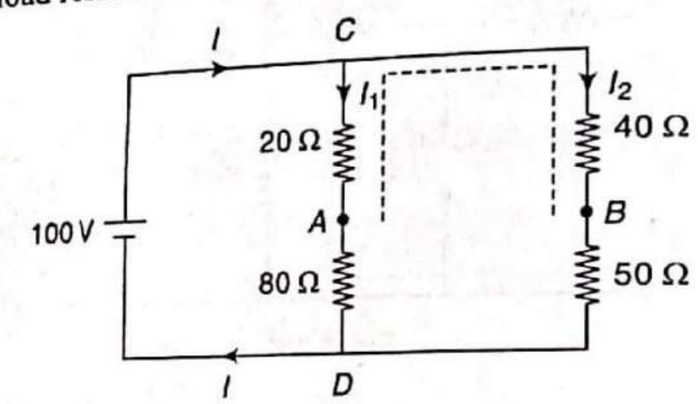

Fig. 1.305

In Fig. 1.305, voltage appears across the load terminals A and B, which is called Thevenin's voltage V_{TH}. For calculation of V_{TH}, i.e., V_{AB}, the selected path from A to B is marked by dotted line in Fig. 1.305. As this path contains the resistors 20 Ω and 40 Ω, currents through these resistances are required. In Fig. 1.305, the actual directions of currents are marked. The 100 V source produces the total current I A, which divides at node C. Let current through branch CAD is I_1 and current through branch CBD is I_2.

By Ohm's law,

$$I_1 = \frac{100}{20+80} = 1 \text{ A}$$

$$I_2 = \frac{100}{40+50} = 1.111 \text{ A}$$

Hence, $V_{TH} = V_{AB}$

$$= 40I_2 - 20I_0$$

$$= 40(1.111) - 20(1)$$

$$= 24.44 \text{ V}$$

Step II: Calculation of R_{TH}

Removing the load resistance from the network and replacing the voltage source by short circuit, we get the following modified network:

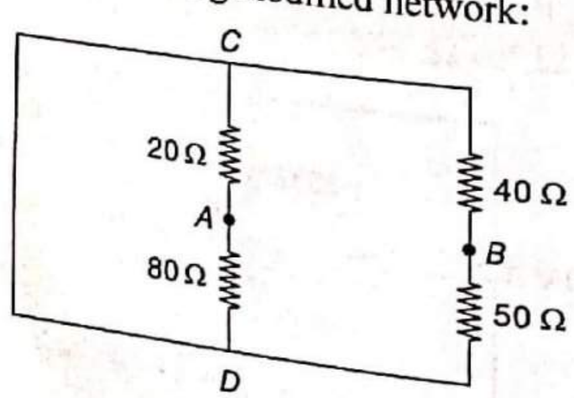

Fig. 1.306

In Fig. 1.306, equivalent resistance across the load terminals A and B is called Thevenin's resistance R_{TH}. Nodes C and D are same and by shorting them, the circuit can be redrawn as follows:

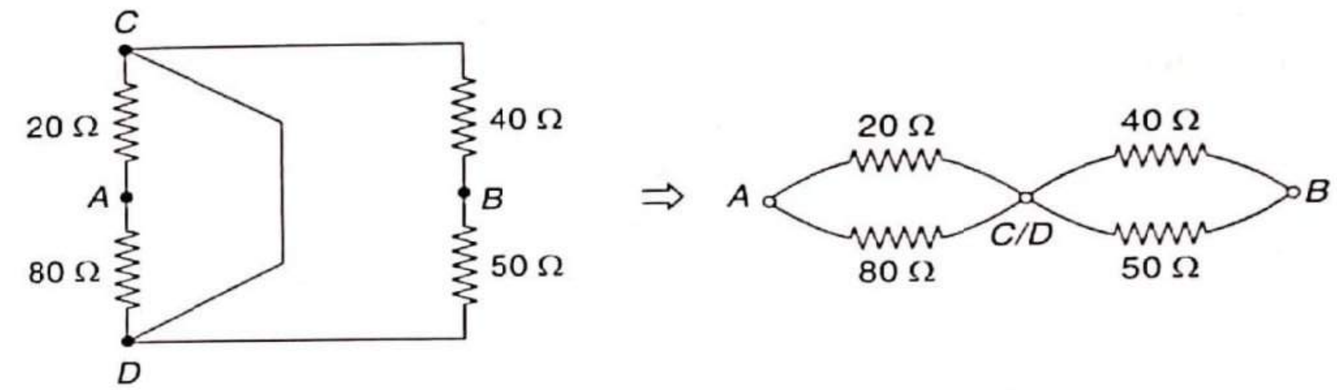

Fig. 1.307

By series-parallel circuit reduction techniques, we get the following circuit:

Thus, $R_{TH} = R_{AB} = 38.22\ \Omega$.

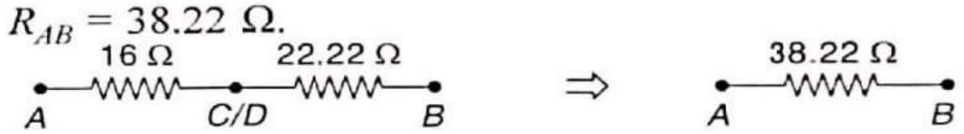

Fig. 1.308

Step III: Calculation of load current

Thevenin's equivalent circuit can be drawn as shown below:

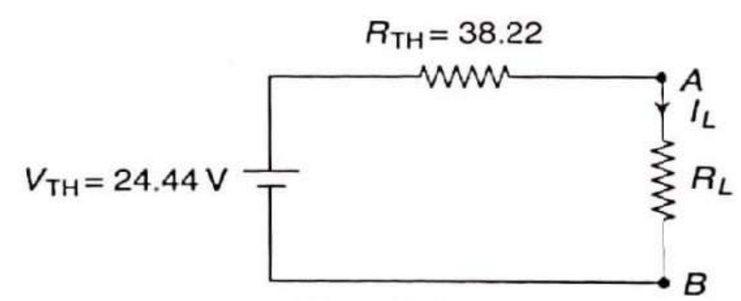

Fig. 1.309

By Ohm's law,

$$I_L = \frac{V_{TH}}{R_L + R_{TH}}$$

Hence, when $R_L = 5\ \Omega$, $I_L = I_{5\Omega} = \dfrac{24.44}{5+38.22} = 0.565 \text{ A}(\rightarrow)$

when $R_L = 10\ \Omega$, $I_L = I_{10\Omega} = \dfrac{24.44}{10+38.22} = 0.507 \text{ A}(\rightarrow)$

when $R_L = 20\ \Omega$, $I_L = I_{20\Omega} = \dfrac{24.44}{20+38.22} = 0.4198 \text{ A}(\rightarrow)$

Example 1.77 By Thevenin's theorem, find the current in 40 Ω resistor in the network shown in Fig. 1.310.

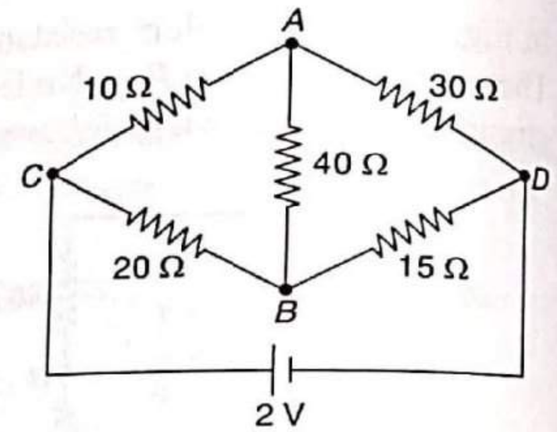

Fig. 1.310

Solution

Step I: Calculation of V_{TH}

Current through 40 Ω resistor is required. This resistance can be called load resistance R_L. Its terminals A and B are called load terminals. Removing the load resistance from the network, we get the modified network as shown in Fig. 1.311.

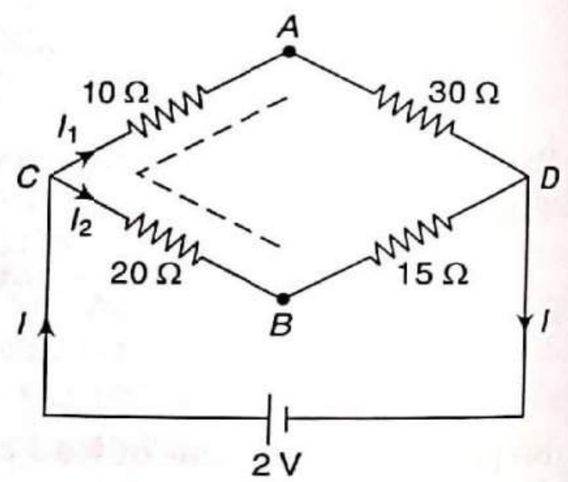

Fig. 1.311

In Fig. 1.311, voltage appears across the load terminals A and B, which is called Thevenin's voltage V_{TH}. For calculation of V_{TH}, i.e., V_{AB}, the selected path from A to B is marked by dotted line in Fig. 1.311. As this path contains the resistors 20 Ω and 10 Ω, currents through these resistances are required. In Fig. 1.311, the actual directions of currents are marked. The 2V source produces the total current I A, which divides at node C. Let current through branch CAD is I_1 and current through branch CBD is I_2. By Ohm's law,

$$I_1 = \frac{2}{10+30} = 0.05 \text{ A}$$

$$I_2 = \frac{2}{20+15} = 0.0571 \text{ A}$$

Hence, $V_{TH} = V_{AB}$

$$= 20I_2 - 10I_1$$
$$= 20(0.0571) - 10(0.05)$$
$$= 0.642 \text{ V}$$

Step II: Calculation of R_{TH}

Removing the load resistance from the network and replacing the voltage source by short circuit, we get the modified network as shown in Fig. 1.312.

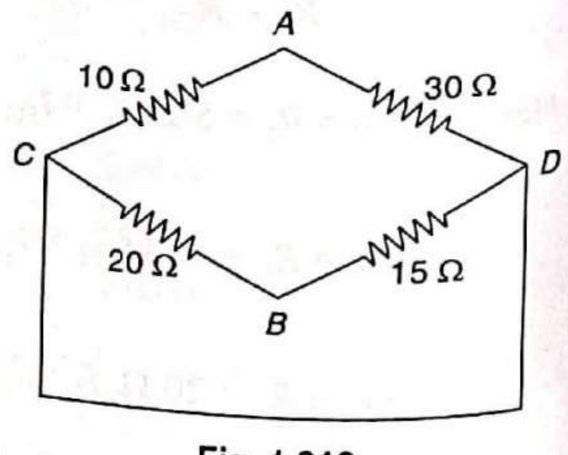

Fig. 1.312

In Fig. 1.312, equivalent resistance across the load terminals A and B is called Thevenin's resistance R_{TH}. Nodes C and D are same and by shorting them, the circuit can be redrawn as shown in Fig. 1.313.

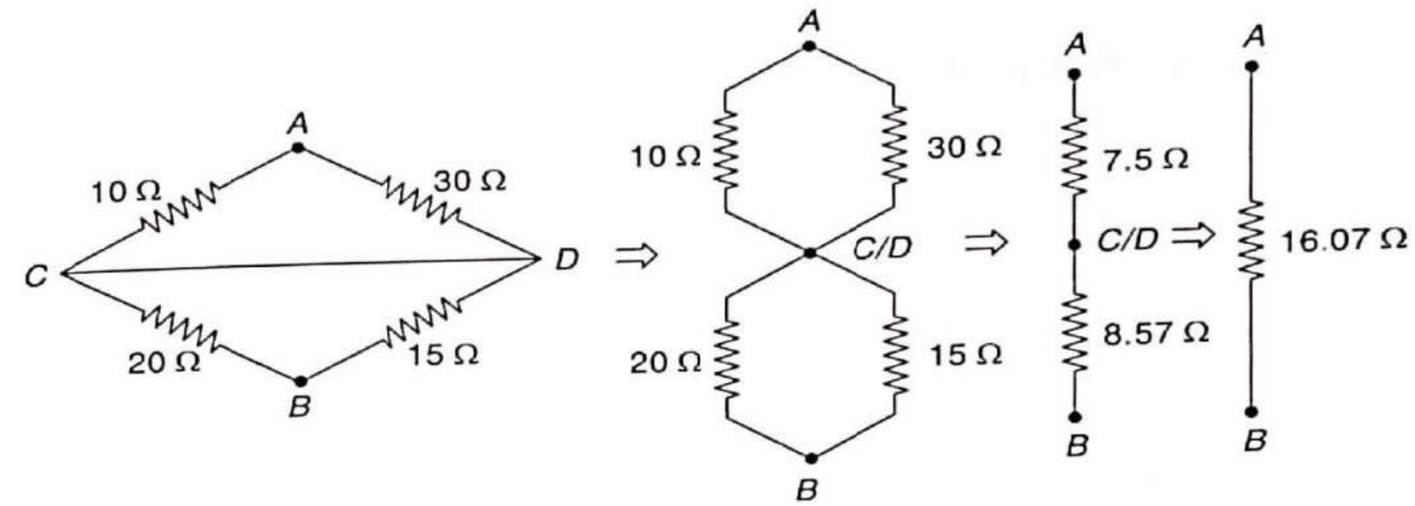

Fig. 1.313

Thus, $R_{TH} = R_{AB} = 16.07$ Ω.

Step III: Calculation of load current

Thevenin's equivalent circuit can be drawn as shown below:

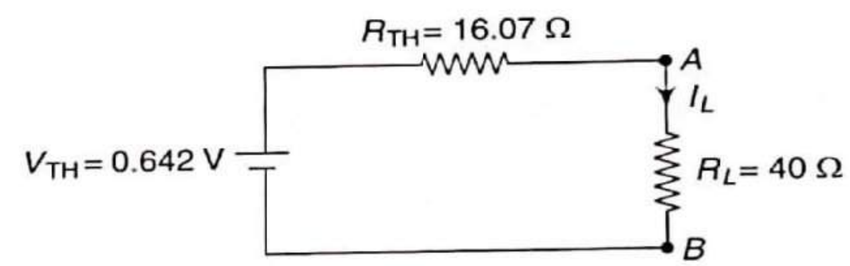

Fig. 1.314

By Ohm's law,

$$I_L = \frac{V_{TH}}{R_L + R_{TH}}$$

Hence, $I_L = I_{40\Omega} = \dfrac{0.642}{40+16.07} = 11.45 \text{ mA}(\downarrow)$

Example 1.78 For circuit shown in Fig. 1.315, find the Thevenin's equivalent circuit across a-b and hence find the current through the load of 10 Ω.

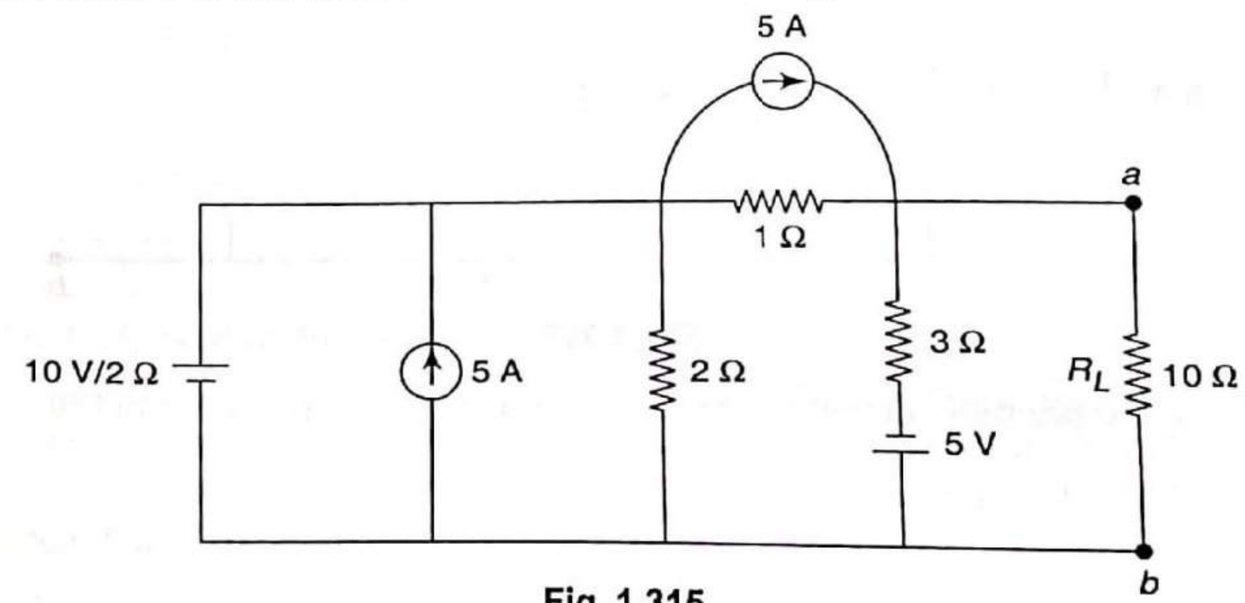

Fig. 1.315

Solution

Step1 : Calculation for V_{TH}

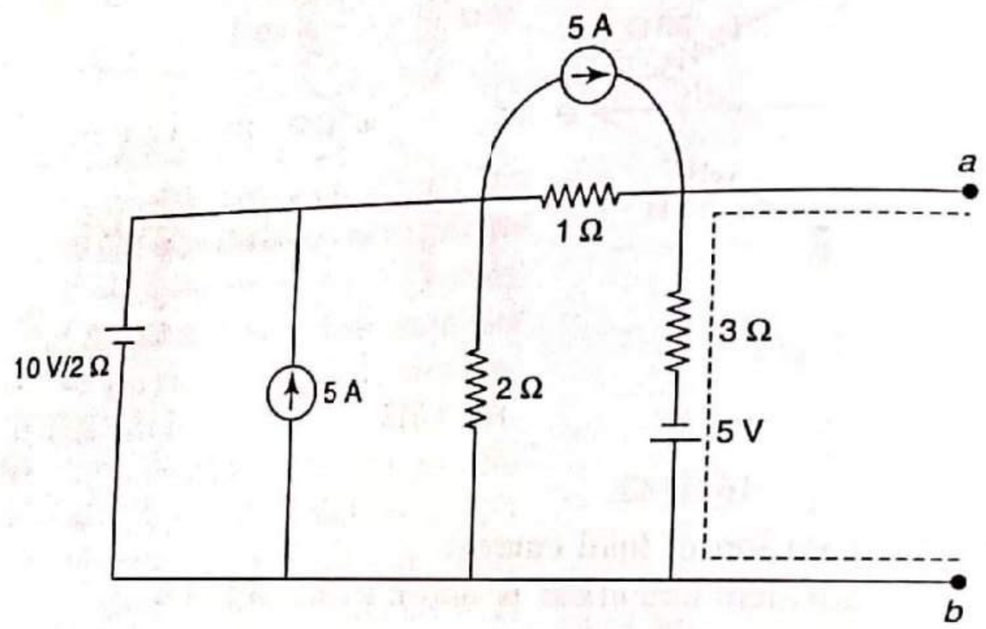

Fig. 1.316

In Fig. 1.316, voltage appears across the load terminal a and b, which is called Thevenin's voltage V_{TH}. For calculation of V_{TH}, i.e., V_{ab}, the selected path from a to b is marked by dotted line in Fig 1.316. As this path contains the resistor 3 Ω, current through this resistor is required. By using source transformation technique, this current can be calculated as follows.

By converting the 10V/2Ω source into equivalent parallel combinations (of current source and resistor), and by converting the parallel combinations (of 5 A current source and 1 Ω resistor) into equivalent series combination, we get the circuit as shown in Fig. 1.317.

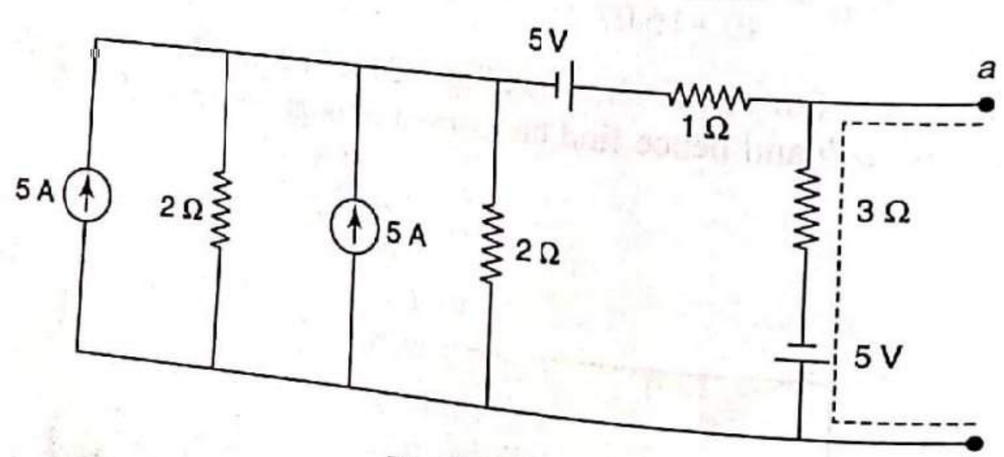

Fig. 1.317

By adding the parallel current sources, we get the circuit as shown in Fig. 1.318.

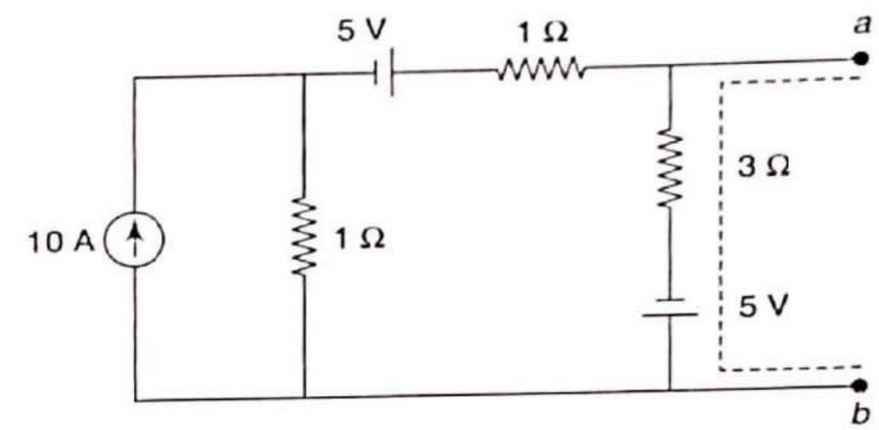

Fig. 1.318

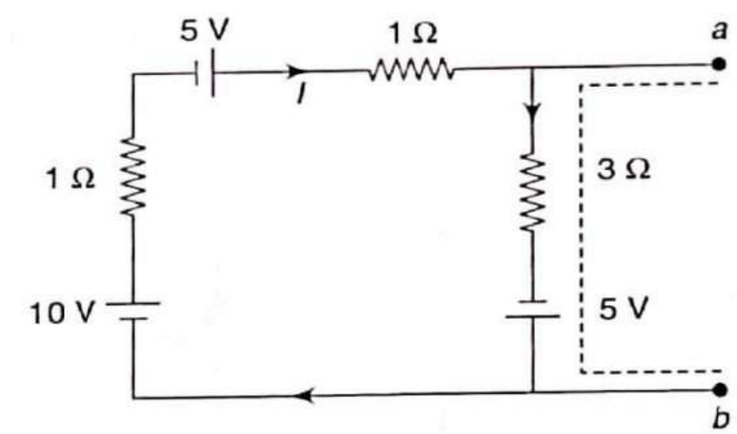

Fig. 1.319

By converting the parallel combinations into equivalent series combinations (of voltage source and resistor), we get the circuit as shown in Fig. 1.319. Let the loop current is I A, which can be calculated as follows:

Applying KVL the loop we get,

$$5 - I - 3I + 5 + 10 - I = 0$$

$$I = 4 \text{ A}$$

Hence,

$$V_{TH} = V_{ab}$$

$$= -5 + 3I$$

$$= -5 + 3(4)$$

$$= 7 \text{ V}$$

Step II: Calculation for R_{TH}

Removing the load resistance from the network and replacing the sources with their internal resistances, we get the circuit as shown in Fig. 1.320. In Fig. 1.320, equivalent resistance across the load terminal a to b is called Thevenin's resistance R_{TH}.

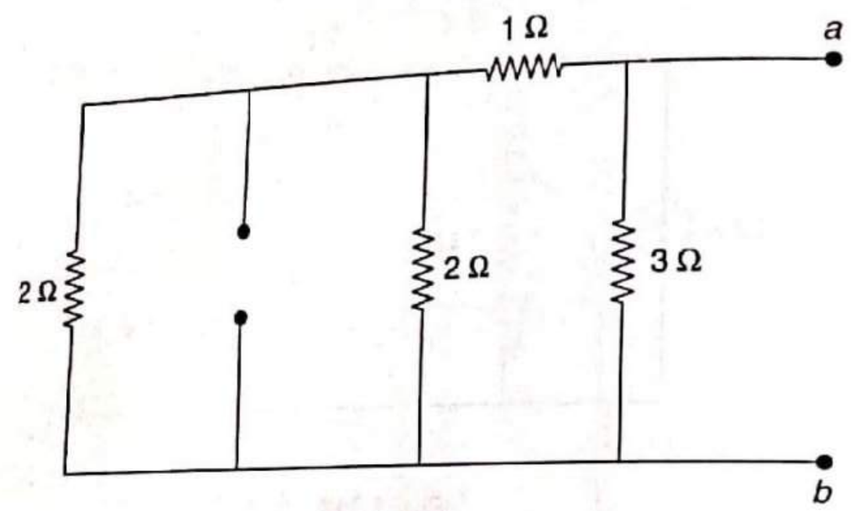

Fig. 1.320

By series–parallel circuit reduction technique, we get the following circuit:

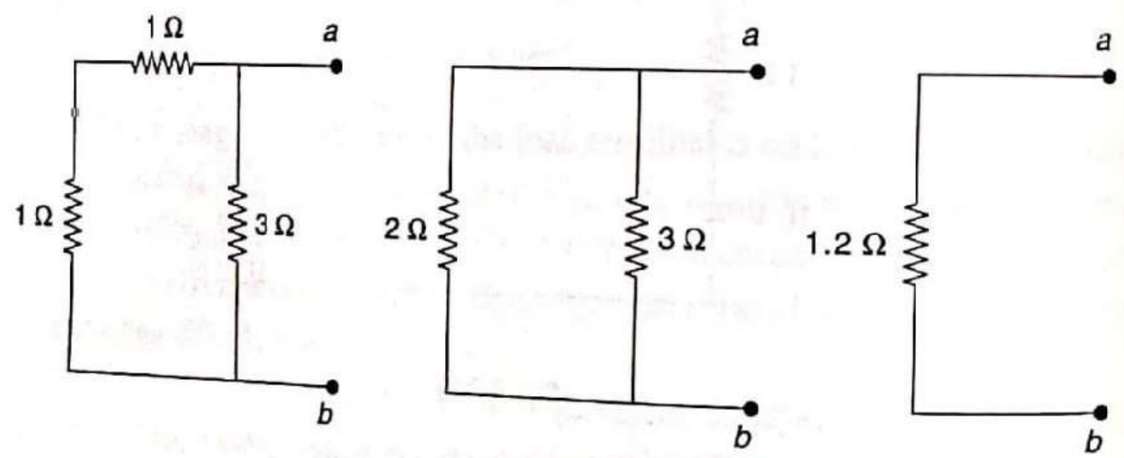

Fig. 1.321

Thus $R_{TH} = R_{ab} = 1.2\ \Omega$

Step III: Calculation for load current

Thevenin's equivalent circuit can be drawn as shown in Fig. 1.322.

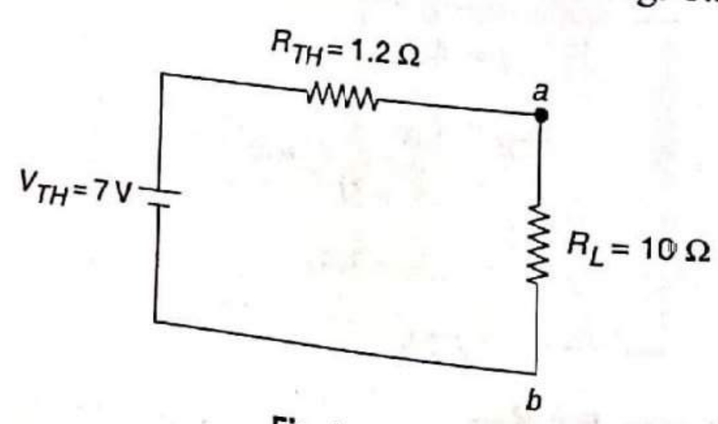

Fig. 1.322

By Ohm's law,

$$I_{10\Omega} = \frac{V_{TH}}{R_L + R_{TH}}$$

$$I_{10\Omega} = \frac{7}{10+1.2} = 0.625\ \text{A}\ (\downarrow)$$

Example 1.79 For the circuit shown in Fig. 1.323, find the Thevenin's equivalent circuit across *A-B*.

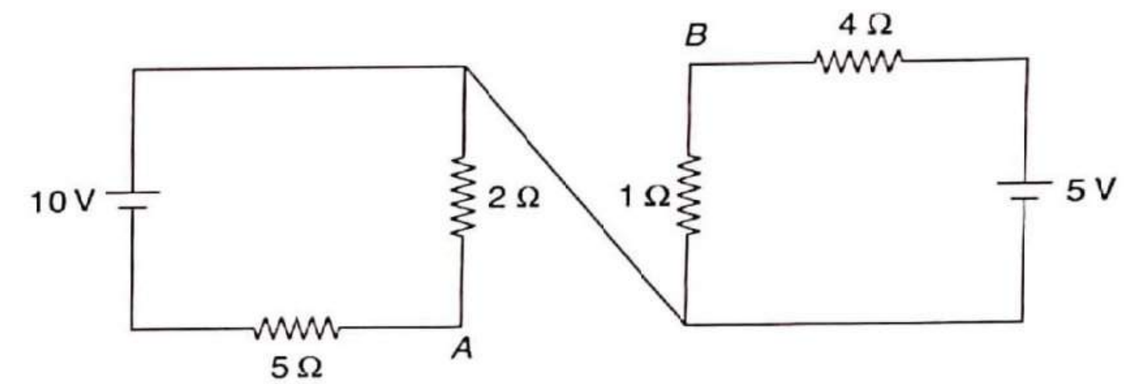

Fig. 1.323

Solution

For simplicity, the circuit shown in Fig. 1.323 can be redrawn as shown in Fig. 1.324.

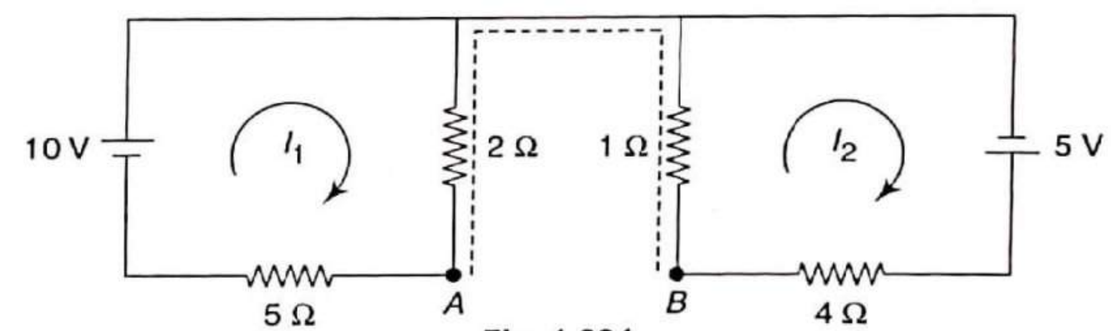

Fig. 1.324

Step I: Calculation for V_{TH}

In Fig. 1.324, voltage appears across the load terminal *A* and *B*, which is called Thevenin's voltage V_{TH}. For calculation of V_{TH}, i.e., V_{AB}, the selected path from *A* to *B* is marked by dotted line in Fig 1.324. As this path contains the resistors 1 Ω and 2 Ω, current through these resistors are required.

Let the loop currents are marked as I_1 and I_2.

From Fig. 1.324,

$$I_1 = \frac{10}{2+5} = 1.43\ \text{A}$$

$$I_2 = \frac{5}{4+1} = 1\ \text{A}$$

Hence, $V_{TH} = V_{AB}$

$$= -1I_2 - 2I_1$$
$$= -1 \times 1 - 2 \times 1.43$$
$$= -3.86\ \text{V}$$

Step II: Calculation for R_{TH}

In Fig. 1.324, replacing the sources with their internal resistances, we get the circuit as shown in Fig. 1.325. In Fig. 1.325, equivalent resistance across the load terminal A to B is called Thevenin's resistance R_{TH}.

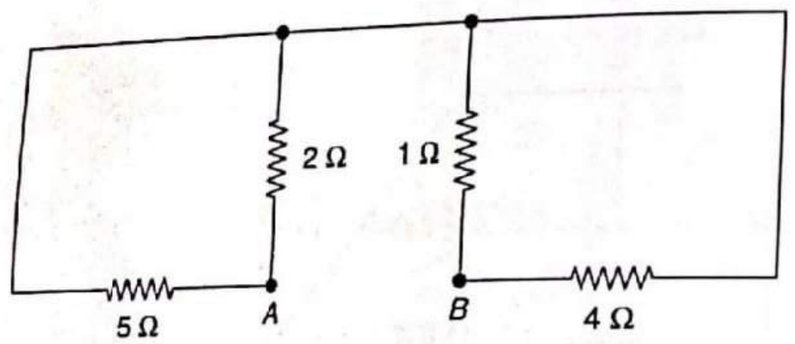

Fig. 1.325

In Fig. 1.325, resistors 5 Ω and 2 Ω are in parallel. Also, resistors 1 Ω and 4 Ω are in parallel.

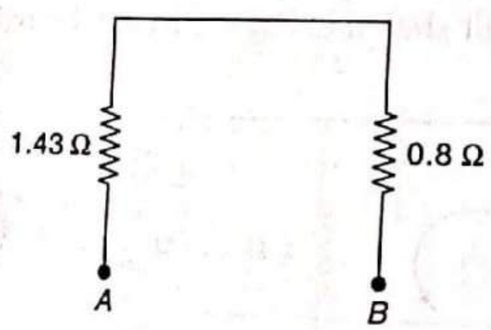

Fig. 1.326

From Fig. 1.326,

$R_{TH} = R_{AB} = 1.43 + 0.8 = 2.23\ \Omega$

Step III: Thevenin's equivalent circuit

Thevenin's equivalent circuit can be drawn as shown in Fig. 1.327.

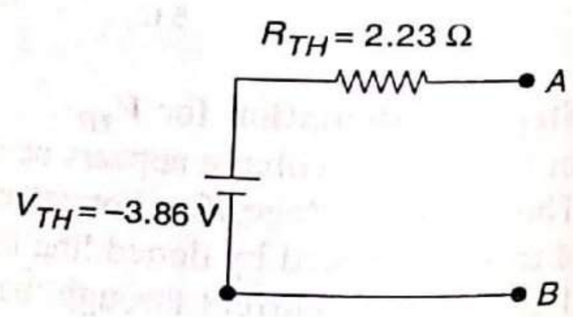

Fig. 1.327

1.18 Norton's Theorem

Norton's theorem is converse of Thevenin's theorem. Norton's equivalent circuit uses a current source instead of voltage source and a resistance R_N (which is same as R_{TH}) in parallel with the source instead of being in series with it.

E.L. Norton, an engineer employed by the Bell Laboratory, USA, first developed this theorem. According to this theorem, any two-terminal network can be replaced by a single current source of magnitude I_N (called Norton current) in parallel with a single resistance R_N (called Norton resistance). Figure 1.328(a) shows a complex network enclosed in a box with two terminals A and B brought out. The network in the box may contain any number of resistors and sources connected in any fashion. But according to Norton, the entire circuit behind

terminals AB can be replaced by a current source I_N in parallel with a resistance R_N as shown in Fig. 1.328(b). The current I_N is equal to the current that would flow when terminals A and B are short circuited, i.e., I_N is equal to the current flowing through short-circuited terminals AB. The resistance R_N is the same as Thevenin's resistance R_{TH}, i.e., R_N is the resistance measured at AB with load removed and replacing all sources by their internal resistances.

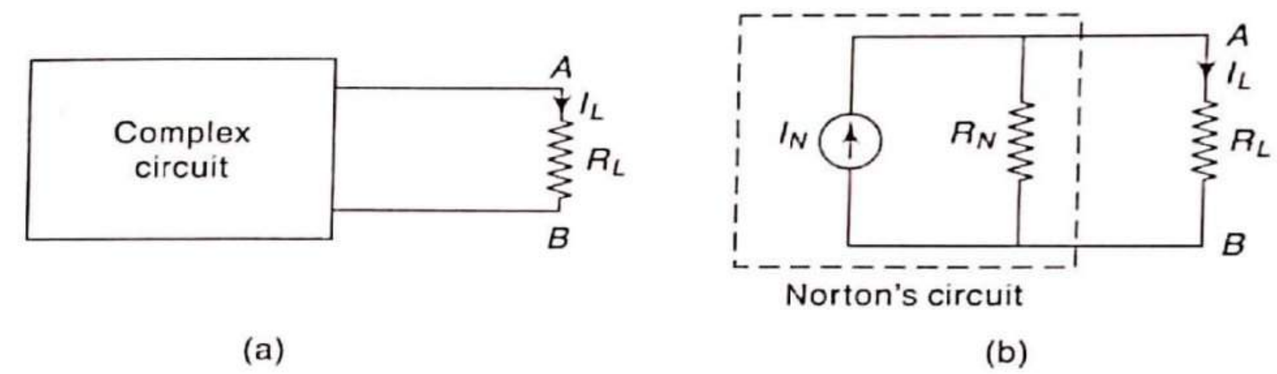

Fig. 1.328 Norton's equivalent circuit

Hence, Norton's theorem as applied to dc circuits may be stated as under:

Any complex network having two terminals A and B can be replaced by a current source of current output I_N in parallel with a resistance R_N.

(i) The output I_N of the current source is equal to the current that would flow through AB when A and B are short circuited.

(ii) The resistance R_N is the resistance of the network measured between A and B with load removed and replacing the source with their internal resistances.

Steps to apply Norton's theorem

Step 1: Short the branch resistance through which current is to be calculated.

Step 2: Obtain the current through this short-circuited branch, using any of the network-simplification techniques. This current is Norton's current I_N.

Step 3: Calculate R_N as viewed through the two terminals of the branch from which current is to be calculated by removing that branch resistance and replacing all sources by their internal resistances.

Step 4: Draw the Norton's equivalent circuit showing current source I_N, with the resistance R_N in parallel with it.

Step 5: Reconnect the branch resistance. Let it be R_L. The required current through the branch is given by

$$I_L = I_N \frac{R_N}{R_L + R_N}$$

Example 1.80 By Norton's theorem, find the current in 20 Ω in the network shown in Fig. 1.329.

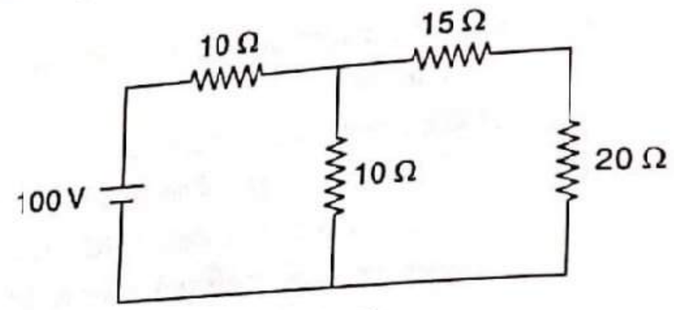

Fig. 1.329

Solution

Current through 20 Ω resistor is required. This resistance can be called load resistance R_L. Its terminals A and B are called load terminals.

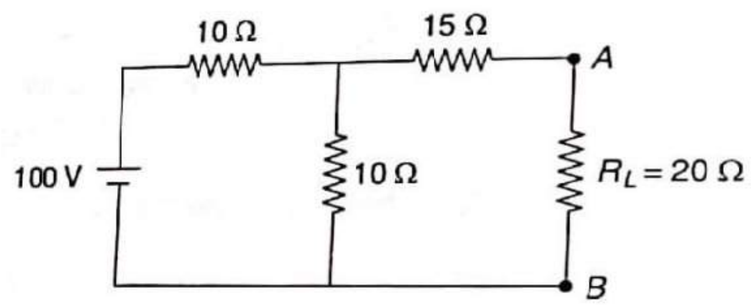

Fig. 1.330

Step I: Calculation of I_N

Removing the load resistance from the network and short circuiting the load terminals, we get the modified network as shown in Fig. 1.331.

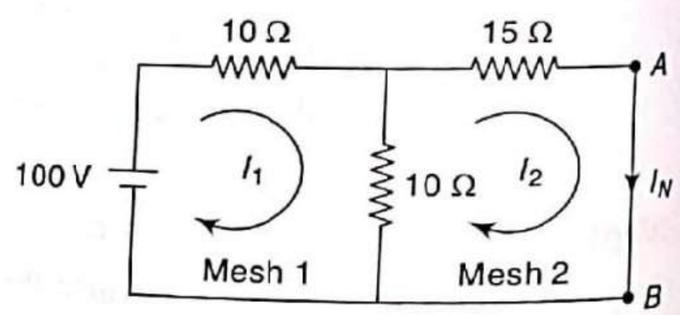

Fig. 1.331

In Fig. 1.331, current flowing through the short circuit placed across the load terminals A and B is called Norton current I_N. This current can be calculated by mesh analysis as shown below.

Applying the KVL to mesh 1,

$$-10I_1 - 10(I_1 - I_2) + 100 = 0$$

or $$-20I_1 + 10I_2 = -100 \quad \text{(i)}$$

Applying the KVL to mesh 2,

$$-15I_2 - 10(I_2 - I_1) = 0$$

or $$10I_1 - 25I_2 = 0 \quad \text{(ii)}$$

Solving Eqs (i) and (ii),

$$I_2 = 2.5\ \text{A}$$

Hence, $I_N = 2.5$ A, from A to B

Step II: Calculation of R_N

Removing the load resistance from the network and replacing the voltage source by short circuit, we get the network as shown in Fig. 1.332.

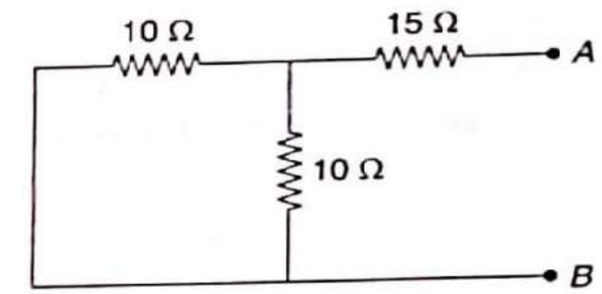

Fig. 1.332

In Fig. 1.332, equivalent resistance across the load terminals A and B is called Norton's resistance R_N.

Thus, $R_N = R_{AB} = (10 \parallel 10) + 15 = 20\ \Omega$

Step III: Calculation of load current

Norton's equivalent circuit can be drawn as shown in Fig. 1.333.

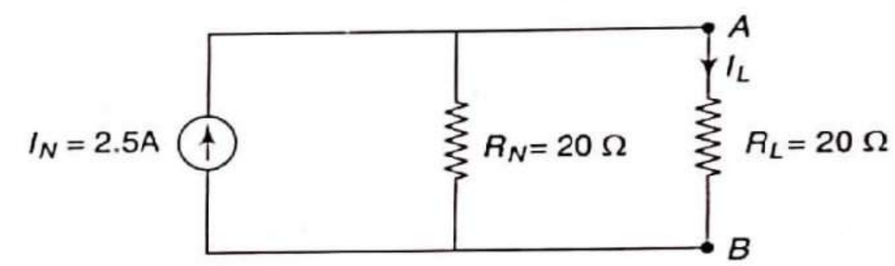

Fig. 1.333

By current division rule,

$$I_L = I_{20\Omega} = 2.5 \times \frac{20}{20 + 20} = 1.25\ \text{A}(\downarrow)$$

Example 1.81 By Norton's theorem, find the current in 4 Ω resistor in the network shown in Fig. 1.334.

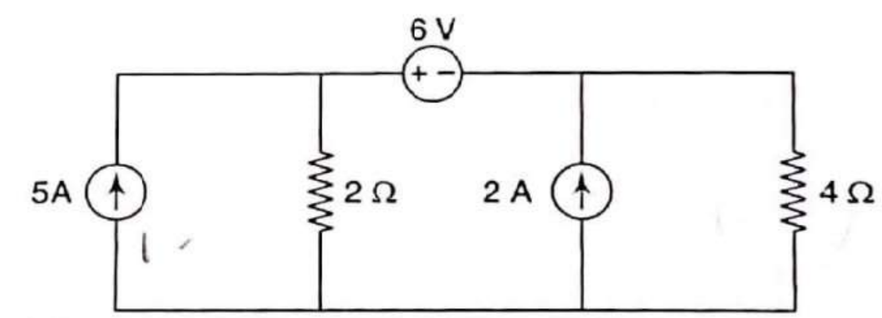

Fig. 1.334

Solution

Current through 4 Ω resistor is required. This resistance can be called load resistance R_L. Its terminals A and B are called load terminals.

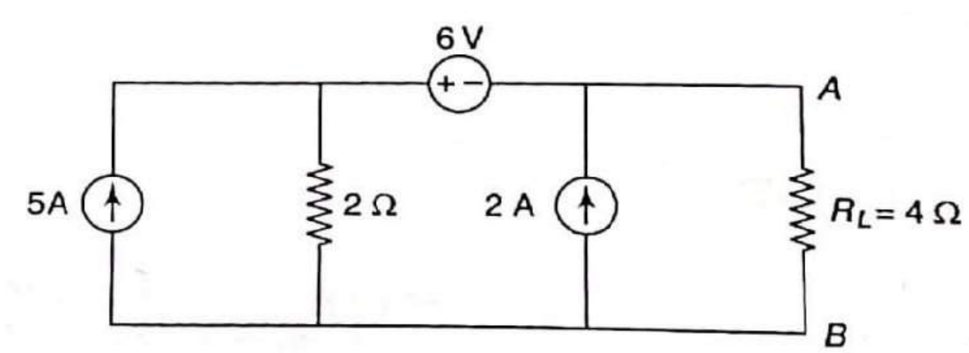

Fig. 1.335

Step I: Calculation of I_N

Removing the load resistance from the network and short circuiting the load terminals, we get the modified circuit as shown in Fig. 1.336.

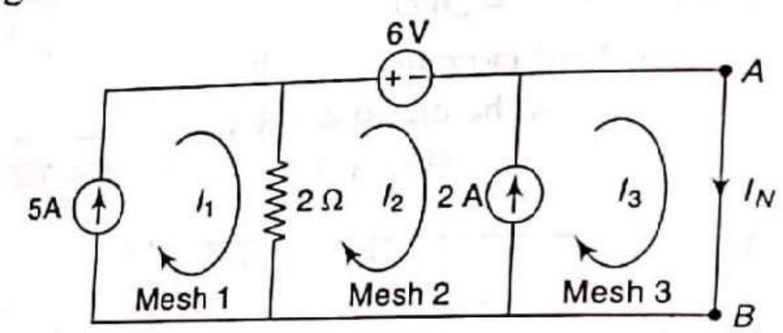

Fig. 1.336

In Fig. 1.336, current flowing through the short circuit placed across the load terminals A and B is called Norton's current I_N. This current can be calculated by mesh analysis as follows.

In mesh 1, current source of 5A is in the direction of mesh current I_1.

So, $I_1 = 5$ (i)

Mesh 2 and mesh 3 form a supermesh.

By expressing the current in the common branch, we get the current equation as

$$(I_3 - I_2) = 2 \quad \text{(ii)}$$

By applying the KVL to the supermesh, we get the voltage equation as

$$-6 - 2(I_2 - I_1) = 0$$

or $2I_1 - 2I_2 = 6$ (iii)

Solving Eqs (i), (ii) and (iii),

$$I_3 = 4 \text{ A}$$

Hence, $I_N = 4$ A; from A to B

Step II: Calculation of R_N

Removing the load resistance from the network and replacing the voltage source by short circuit and current sources by open circuits, we get the network as shown in Fig. 1.337.

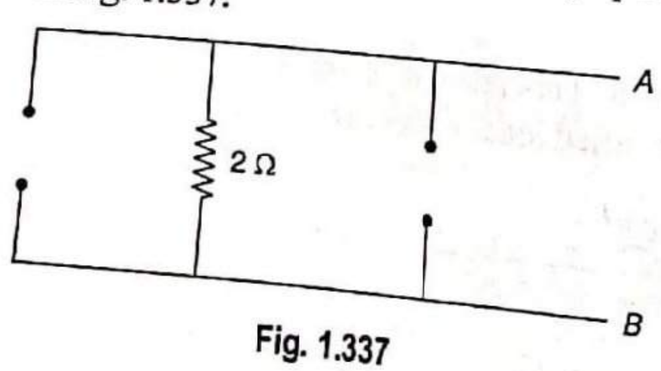

Fig. 1.337

Thus, $R_N = R_{AB} = 2\ \Omega$.

Step III: Calculation of load current

Norton's equivalent circuit can be drawn as shown in Fig. 1.338.

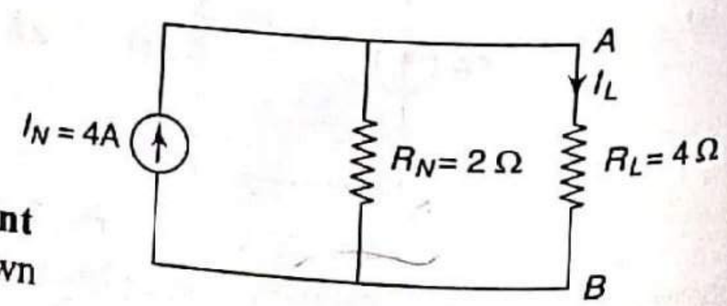

Fig. 1.338

By current division rule,

$$I_L = I_{4\Omega} = 4 \times \frac{2}{4+2} = 1.33 \text{ A}(\downarrow)$$

Example 1.82 By Norton's theorem, find the current in 4 Ω resistor in the network shown in Fig. 1.339.

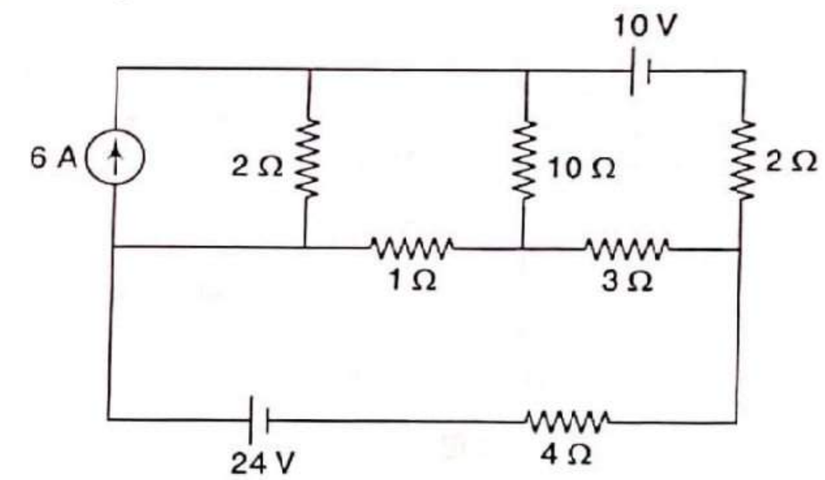

Fig. 1.339

Solution

Current through 4 Ω resistor is required. This resistance can be called load resistance R_L. Its terminals A and B are called load terminals (see Fig. 1.340).

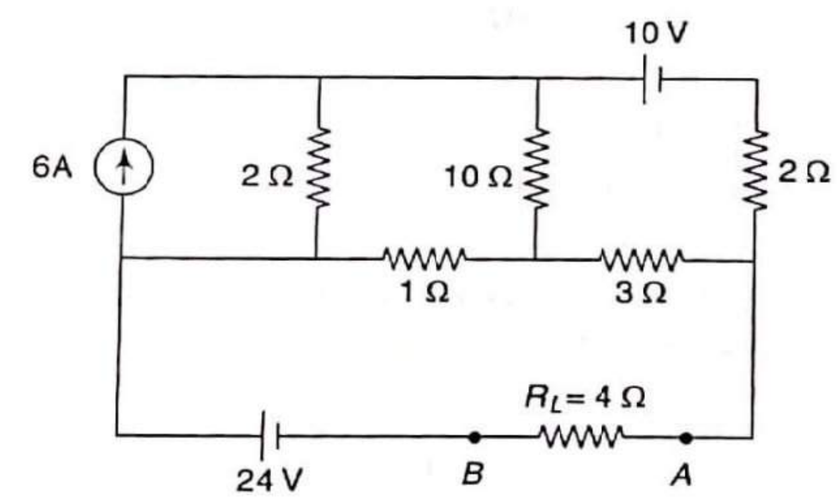

Fig. 1.340

Step I: Calculation of I_N

Removing the load resistance from the network and short circuiting the load terminals, we get the network as shown in Fig. 1.341.

In Fig. 1.341, current flowing through the short circuit placed across the load terminals A and B is called Norton's current I_N.

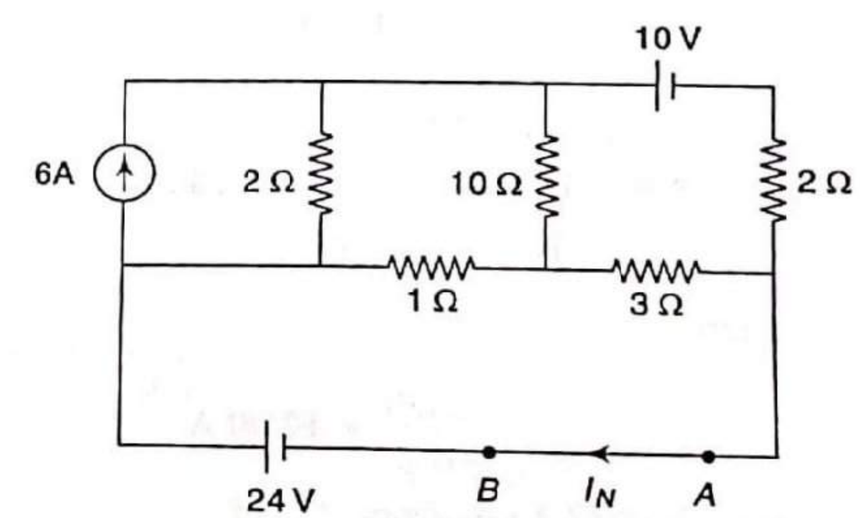

Fig. 1.341

By source transformation, i.e., converting parallel combination of current source of 6 A and resistor of 2 Ω into equivalent series combination of voltage source and resistor, we get the modified network as shown in Fig. 1.342.

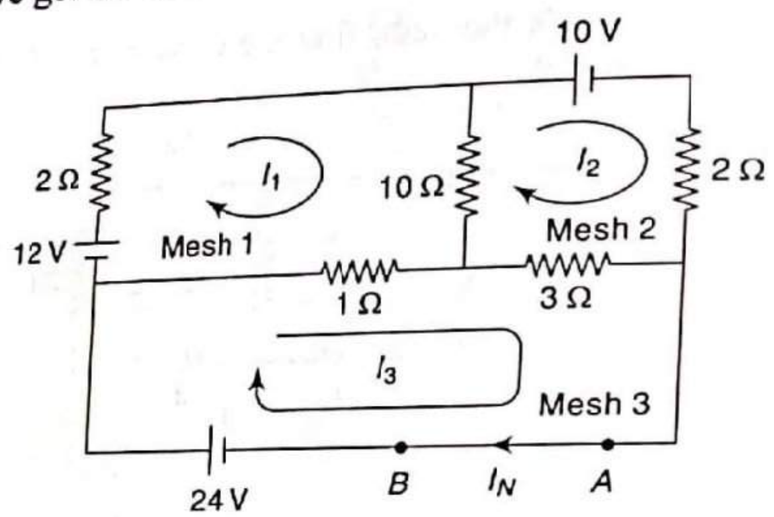

Fig. 1.342

Applying KVL to mesh 1,

$$-2I_1 - 10(I_1 - I_2) - (I_1 - I_3) + 12 = 0$$

or $$-13I_1 + 10I_2 + I_3 = -12 \quad \text{(i)}$$

Applying the KVL to mesh 2,

$$-10(I_2 - I_1) - 10 - 2I_2 - 3(I_2 - I_3) = 0$$

or $$10I_1 - 15I_2 + 3I_3 = 10 \quad \text{(ii)}$$

Applying the KVL to mesh 3,

$$-(I_3 - I_1) - 3(I_3 - I_2) + 24 = 0$$

or $$I_1 + 3I_2 - 4I_3 = -24 \quad \text{(iii)}$$

The value of I_3 may be found by solving the above three simultaneous equations or by the method of determinants as given below:

Putting the above three equations in matrix form, we have

$$\begin{bmatrix} -13 & 10 & 1 \\ 10 & -15 & 3 \\ 1 & 3 & -4 \end{bmatrix} \begin{bmatrix} I_1 \\ I_2 \\ I_3 \end{bmatrix} = \begin{bmatrix} -12 \\ 10 \\ -24 \end{bmatrix}$$

So, $$\Delta = \begin{vmatrix} -13 & 10 & 1 \\ 10 & -15 & 3 \\ 1 & 3 & -4 \end{vmatrix} = -188, \qquad \Delta_3 = \begin{vmatrix} -13 & 10 & -12 \\ 10 & -15 & 10 \\ 1 & 3 & -24 \end{vmatrix} = -2330$$

By Cramer's rule,

$$I_3 = \frac{\Delta_3}{\Delta} = \frac{-2330}{-188} = 12.39 \text{ A}$$

Hence, $I_N = 12.39$ A, from A to B

Step II: Calculation of R_N

Removing the load resistance from the network and replacing the voltage source by short circuits and current source by open circuit, we get the following circuit:

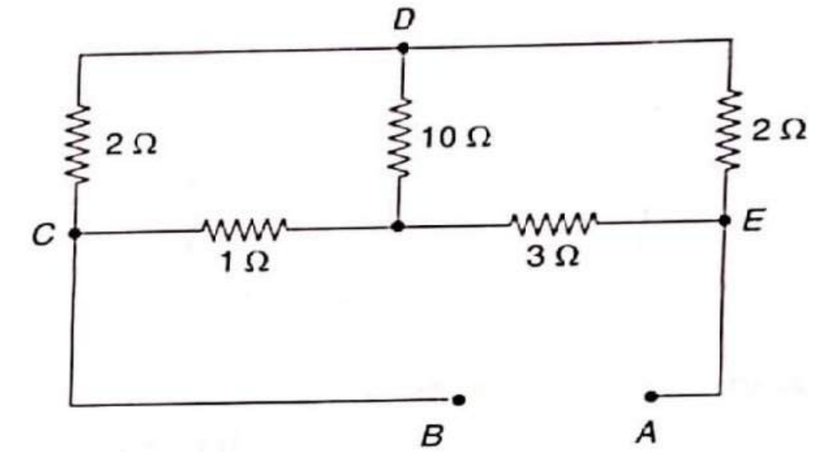

Fig. 1.343

Converting the star connection formed by 1 Ω, 10 Ω, and 3 Ω resistors ($Y\,CDE$) into equivalent delta connection, i.e., $Y\,CDE \Rightarrow \Delta\,CDE$, we get the circuit as shown in Fig. 1.344.

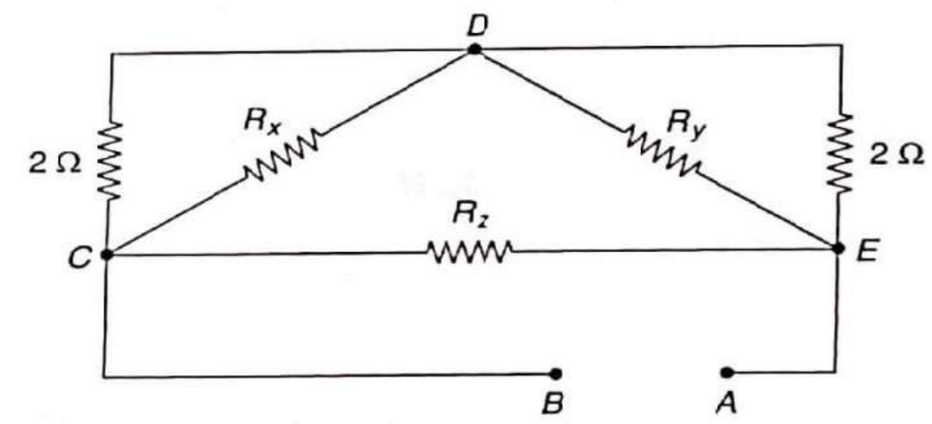

Fig. 1.344

We have $$R_x = 1 + 10 + \frac{1 \times 10}{3} = 14.33\ \Omega, \qquad R_y = 10 + 3 + \frac{10 \times 3}{1} = 43\ \Omega,$$

$$R_z = 1 + 3 + \frac{1 \times 3}{5} = 4.3\ \Omega$$

The simplified network is shown in Fig. 1.345.

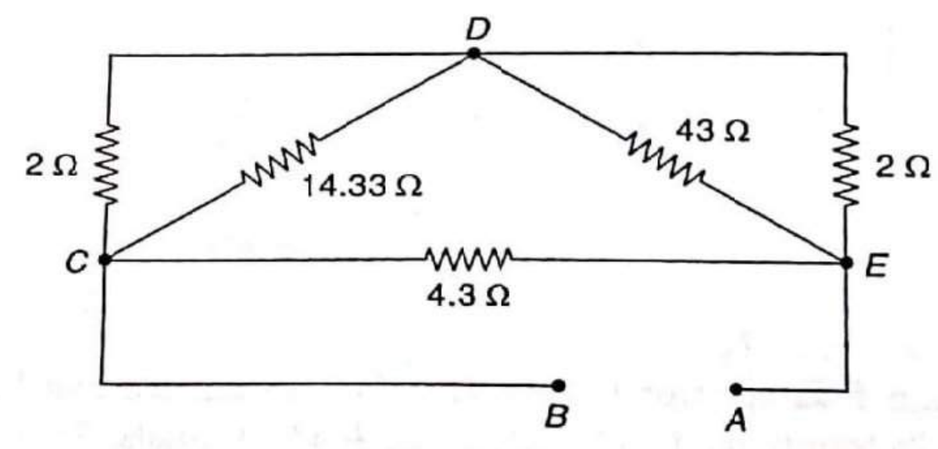

Fig. 1.345

By series-parallel circuit reduction techniques, we get the following network:
Thus, $R_N = R_{AB} = 1.98\ \Omega$.

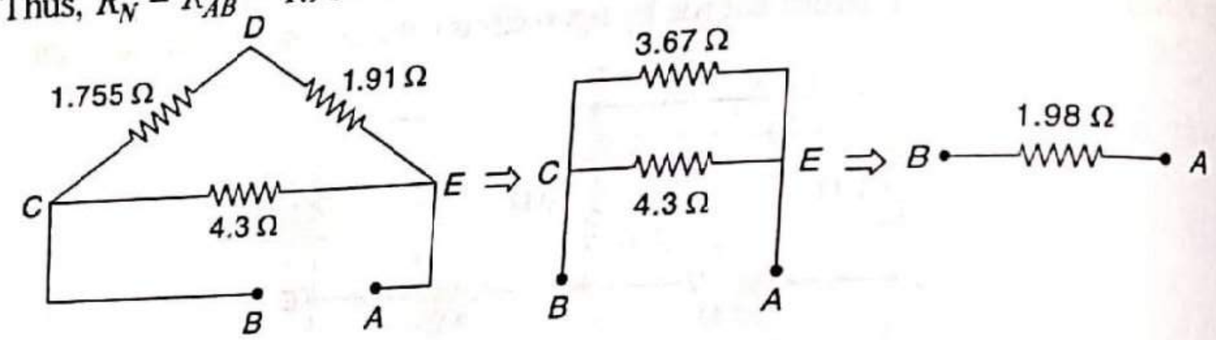

Fig. 1.346

Step III: Calculation of load current
Norton's equivalent circuit can be drawn as shown below:
By current division rule,

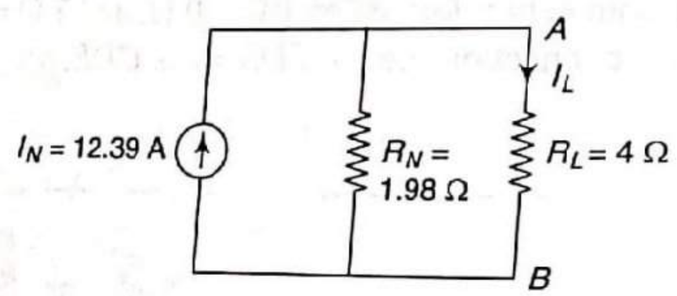

Fig. 1.347

$$I_L = I_{4\Omega} = 12.39 \times \frac{1.98}{1.98+4} = 4.1\ \text{A}(\leftarrow)$$

Example 1.83 By Norton's theorem, find the current in 5 Ω resistor in the network shown in Fig. 1.348.

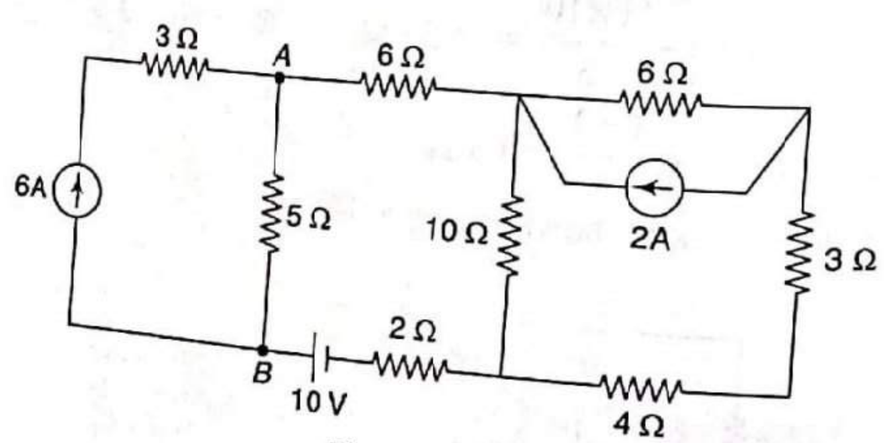

Fig. 1.348

Solution

Step I: Calculation of I_N
Current through 5 Ω resistor is required. This resistance can be called load resistance R_L. Its terminals A and B are called load terminals. Removing the load

resistance from the network and short circuiting the load terminals, we get the following network:

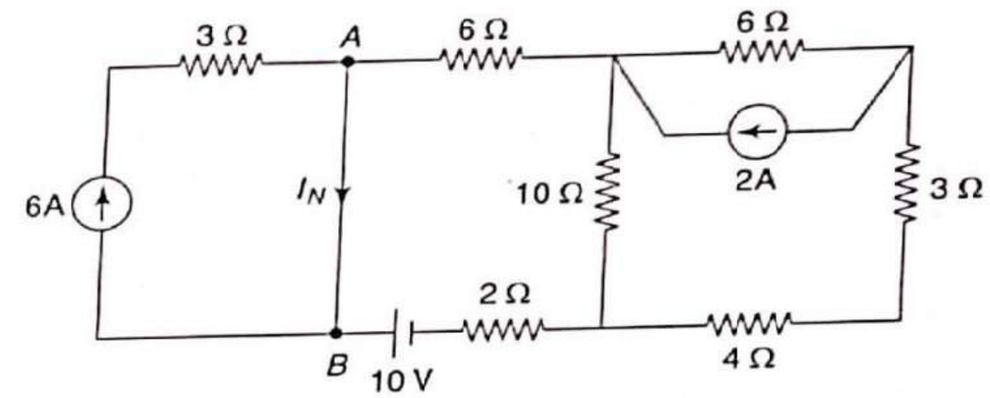

Fig. 1.349

In Fig. 1.349, current flowing through the short circuit placed across the load terminals A and B is called Norton's current I_N. By source transformation, i.e., converting parallel combination of current source of 2 A and resistor of 6 Ω into equivalent series combination of voltage source and resistor, we get the modified network as shown in Fig. 1.350.

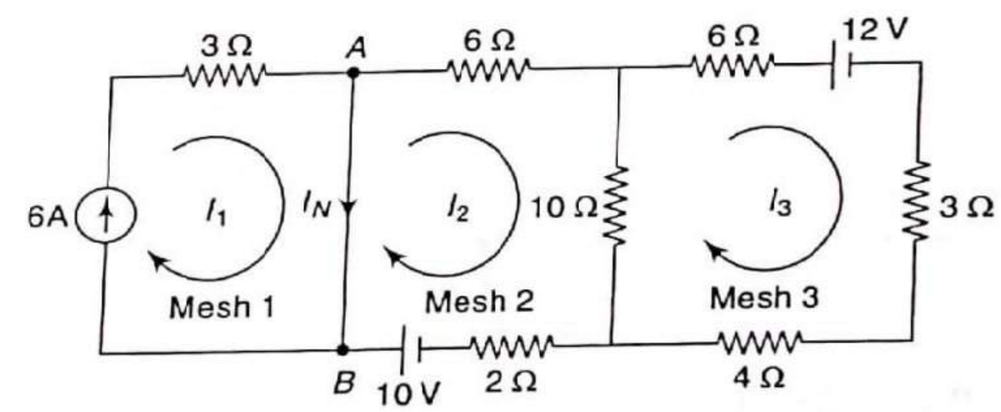

Fig. 1.350

The current I_N can be calculated by mesh analysis.
In mesh 1, current source of 6 A is in the direction of mesh current I_1.

So, $I_1 = 6$ (i)

Applying the KVL to mesh 2,

$$6I_2 - 10(I_2 - I_3) - 2I_2 + 10 = 0$$

or $-18I_2 + 10I_3 = -10$ (ii)

Applying the KVL to mesh 3,

$$-6I_3 - 12 - 3I_3 - 4I_3 - 10(I_3 - I_2) = 0$$

or $10I_2 - 23I_3 = 12$ (iii)

Solving Eqs (i), (ii) and (iii), we get

$$I_1 = 6\ \text{A},\ I_2 = 0.35\ \text{A}$$

or $I_N = I_1 - I_2 = 5.65$ A, from A to B

Step II: Calculation of R_N

Removing the load resistance from the network and replacing the voltage source by short circuit and current sources by open circuits, we get the following network:

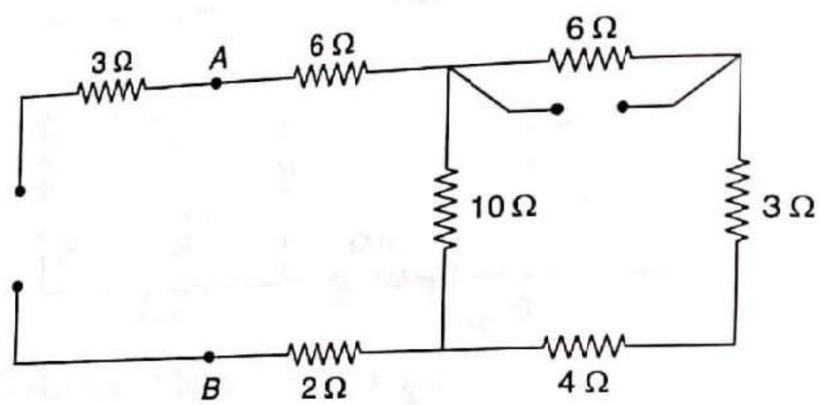

Fig. 1.351

By series-parallel circuit reduction techniques, we get the network as shown in Fig. 1.352.

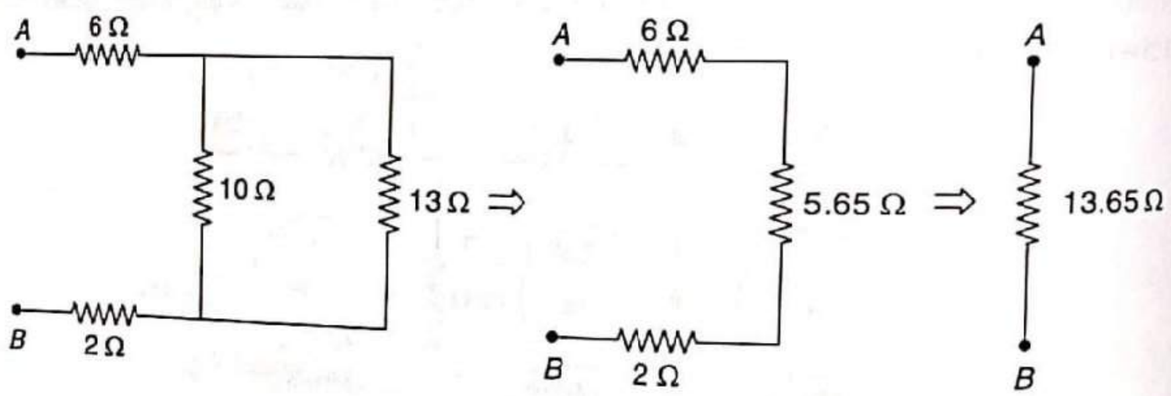

Fig. 1.352

Thus, $R_N = R_{AB} = 13.65\ \Omega$.

Step III: Calculation of load current

Norton's equivalent circuit can be drawn as shown in Fig. 1.353.

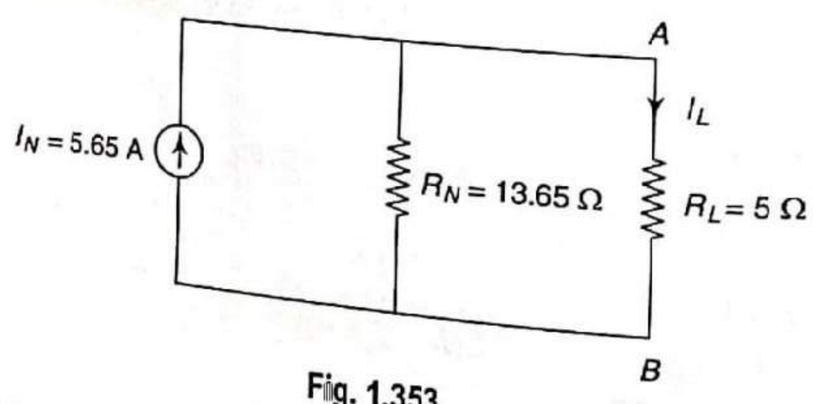

Fig. 1.353

By current division rule,

$$I_L = I_{5\Omega} = 5.65 \times \frac{13.65}{13.65+5} = 4.14\ \text{A}(\downarrow)$$

Example 1.84 Find the current I in the network of Fig. 1.354 by using Norton's theorem.

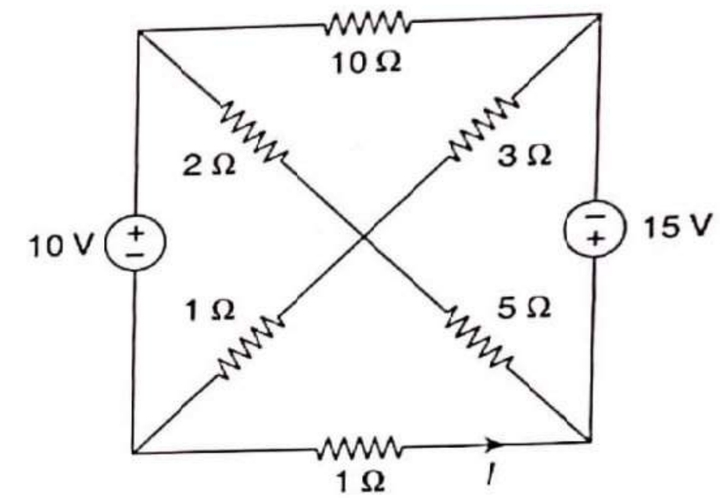

Fig. 1.354

Solution

Current through 1 Ω resistor is required. This resistance can be called as load resistance R_L. Its terminals A and B are called load terminals (see Fig. 1.355).

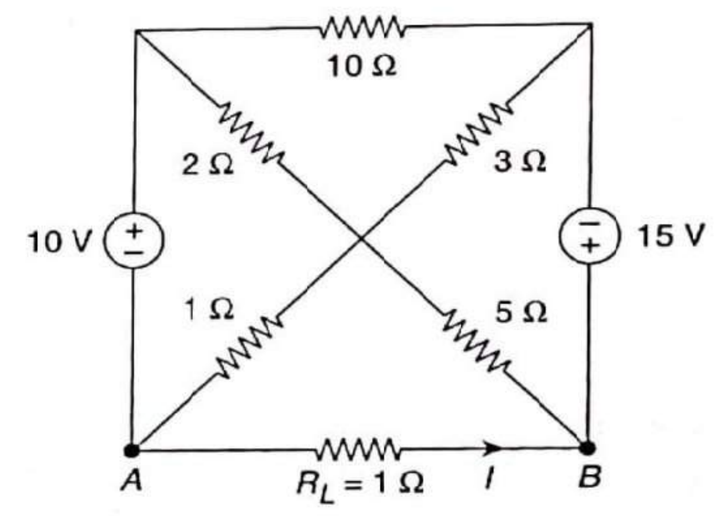

Fig. 1.355

Step I: Calculation of I_N

Removing the load resistance from the network and short circuiting the load terminals, we get the network as shown in Fig. 1.356.

In Fig. 1.356, current flowing through the short circuit placed across the load terminals A and B is called Norton's current I_N.

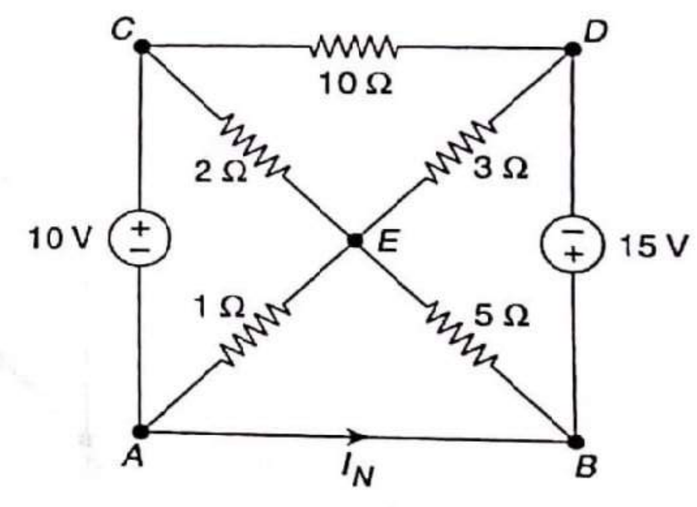

Fig. 1.356

Converting delta connection formed by three resistors, i.e., 2 Ω, 3 Ω, and 10 Ω into equivalent star network, i.e. ΔCDE ⇒ YCDE, we get the simplified network as shown in Fig. 1.357.

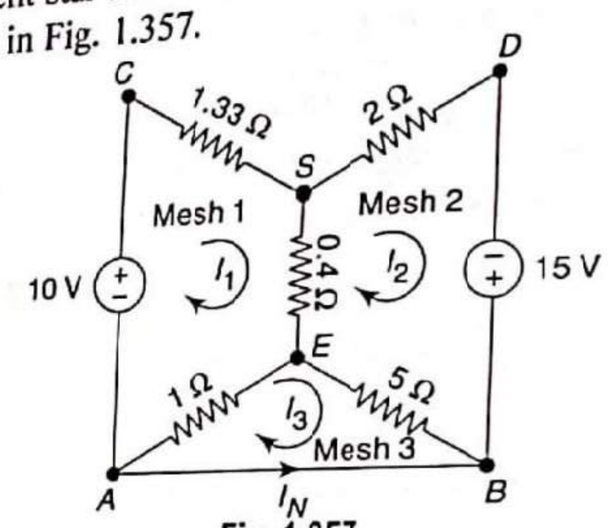

Fig. 1.357

The current I_N can be calculated by Mesh analysis.

Applying KVL to Mesh 1,

$$-1.33I_1 - 0.4(I_1 - I_2) - 1(I_1 - I_3) + 10 = 0$$

$$-2.73I_1 + 0.4I_2 + I_3 = -10 \quad \text{(i)}$$

Applying KVL to Mesh 2,

$$-2I_2 + 15 - 5(I_2 - I_3) - 0.4(I_2 - I_1) = 0$$

$$0.4I_1 - 7.4I_2 + 5I_3 = -15 \quad \text{(ii)}$$

Applying KVL to Mesh 3,

$$-5(I_3 - I_2) - 1(I_3 - I_1) = 0$$

$$I_1 + 5I_2 - 6I_3 = 0 \quad \text{(iii)}$$

Solving Eqs (i), (ii), and (iii), we get

i.e.

$$I_3 = 7.506 \text{ A}$$

$$I_N = -7.506 \text{ A}$$

Step II: Calculation or R_N

Removing the load resistance from the network and replacing the voltage sources by short circuit, we get the network as shown in Fig. 1.358. In Fig. 1.358, equivalent resistance across load terminals A and B is called Norton's resistance R_N.

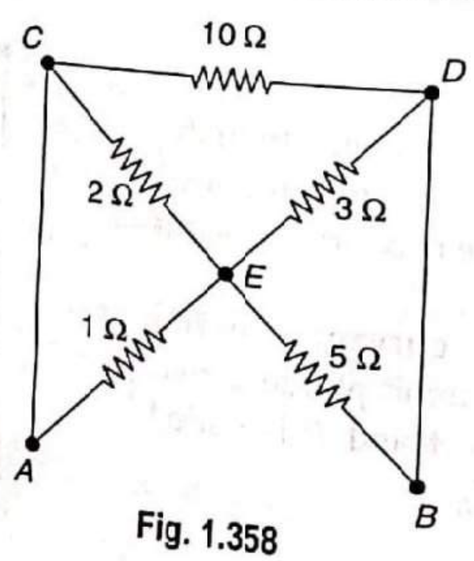

Fig. 1.358

In Fig.1.358, node C and node A are same, similarly node D and node B are same. By joining them, the circuit can be simplified as follows:

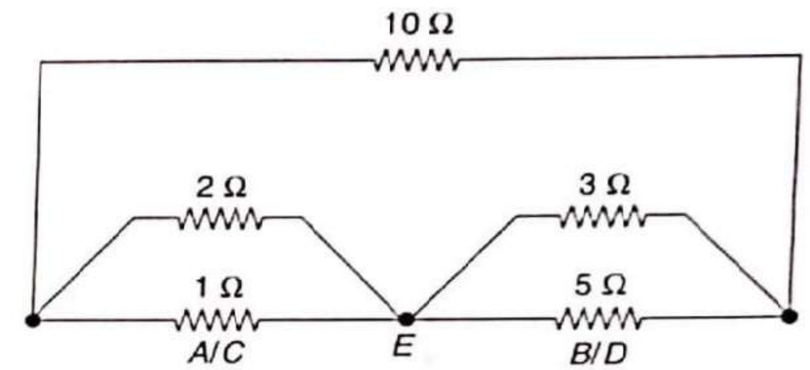

Fig. 1.359

By using series-parallel reduction technique, the circuit is reduced across A and B as follows:

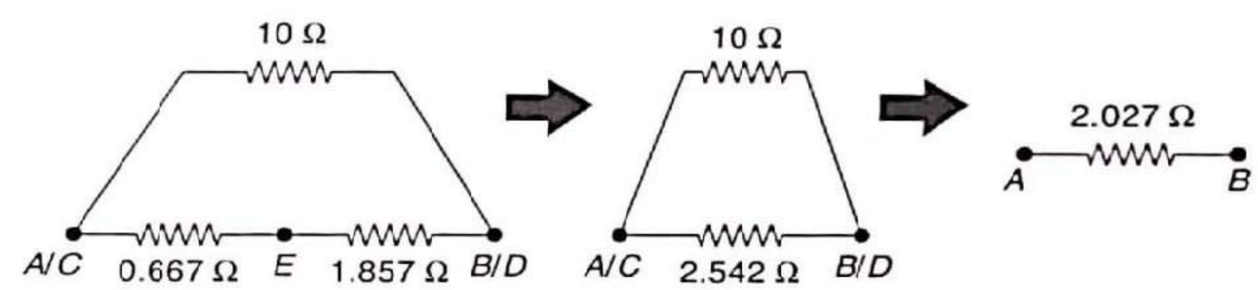

Fig. 1.360

Thus, $R_N = R_{AB} = 2.027\ \Omega$

Step III: Calculation of load current

Norton's equivalent circuit can be drawn as follows:

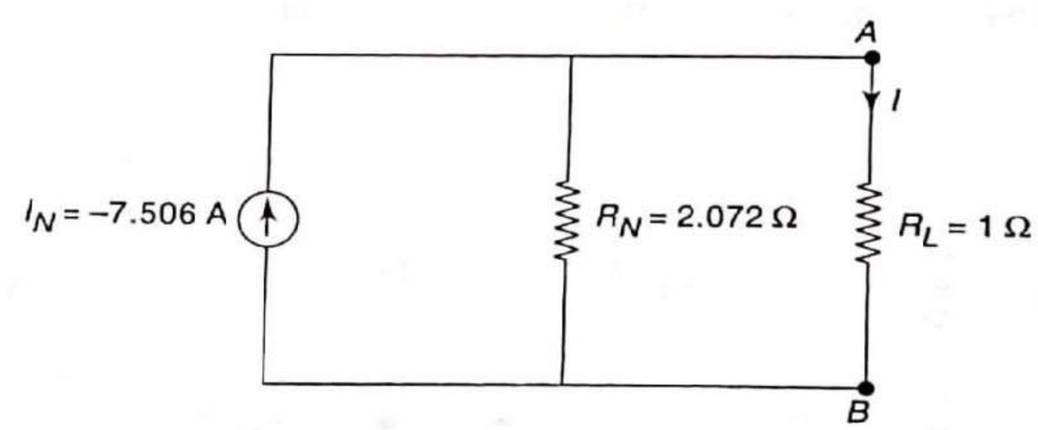

Fig. 1.361

By current division rule,

$$I = \frac{-7.506 \times 2.027}{2.027 + 1} = -5.026 \text{ A}$$

Example 1.85 Obtain Norton's equivalent circuit across A and B as shown in Fig. 1.362.

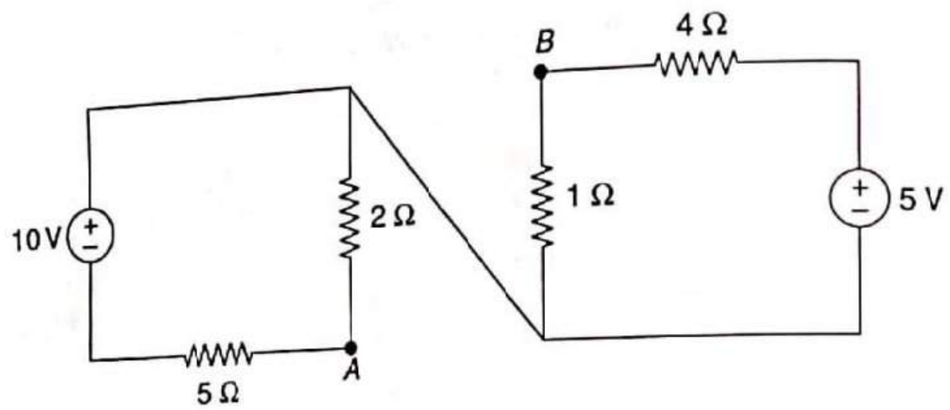

Fig. 1.362

Solution

For simplicity, the circuit shown in Fig. 1.362 can be redrawn as shown in Fig. 1.363.

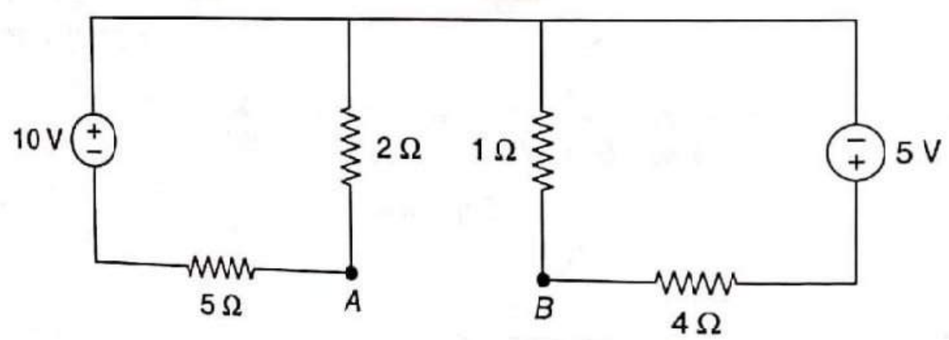

Fig. 1.363

Step I: Calculation of I_N

In Fig. 1.364, current flowing through the short circuit placed across the load terminals A and B is called Norton's current I_N.

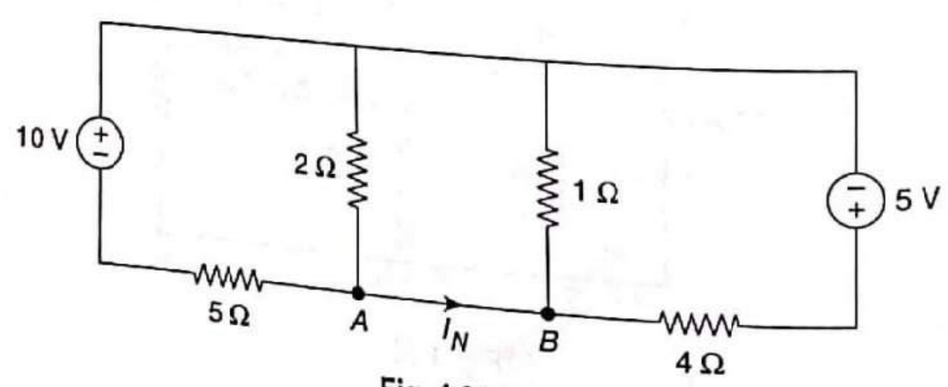

Fig. 1.364

In the circuit of Fig. 1.364, there are two combinations as follows:

(i) Series combination of voltage source of 10 V and resistor of 5 Ω

(ii) Series combination of voltage source of 5 V and resistor of 4 Ω

Converting the above combinations into equivalent combinations, we get the simplified circuit as follows:

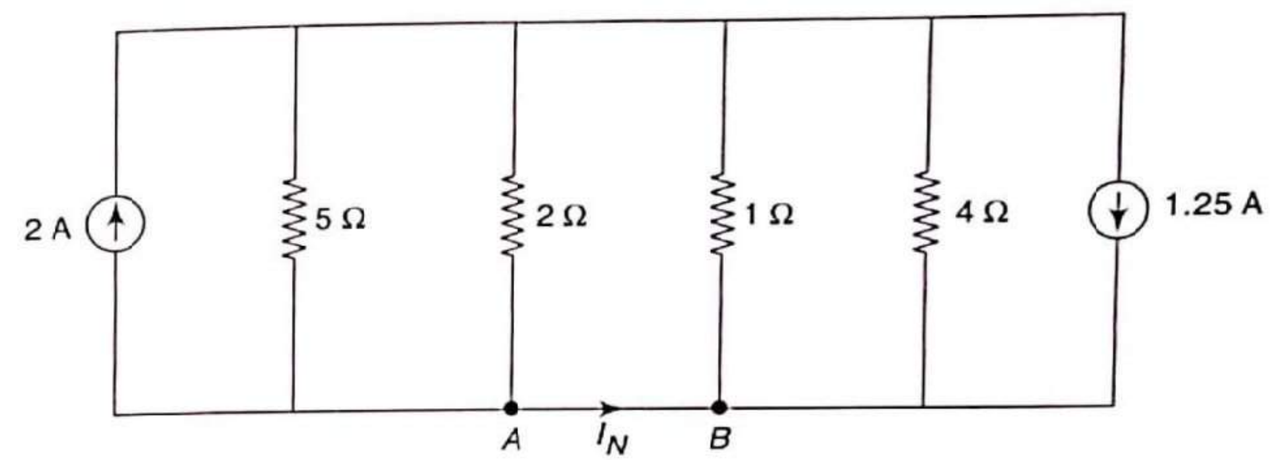

Fig. 1.365

In Fig. 1.365, all elements are in parallel. The resistors 5 Ω and 2 Ω are in parallel. Similarly resistors 1 Ω and 4 Ω are in parallel.

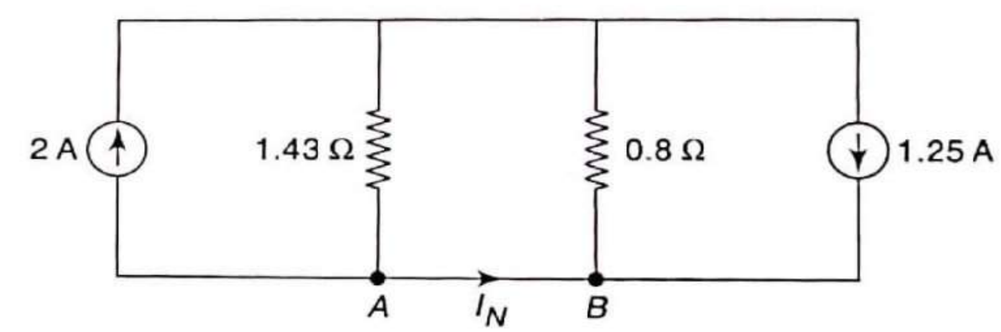

Fig. 1.366

In the circuit of Fig. 1.366, there are two combinations as follows:

(i) Parallel combination of current source of 2 A and resistor of 1.43 Ω

(ii) Parallel combination of current source of 1.25 A and resistor of 0.8 Ω

Converting the above combinations into equivalent combinations, we get the simplified circuit as follows:

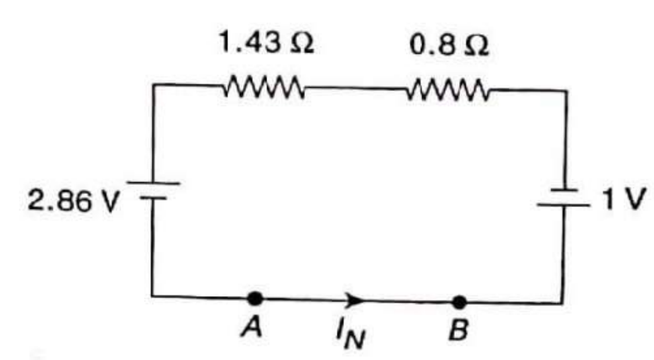

Fig. 1.367

By applying KVL to the loop, we get

$$2.86 + 1.43I_N + 0.8I_N + 1 = 0$$

$$\therefore \quad I_N = -1.73 \text{ A}$$

Step II: Calculation of R_N

Replacing the voltage sources by short circuit, we get the network as shown in Fig. 1.368. In Fig. 1.368, equivalent resistance across load terminals A and B is called Norton's resistance R_N.

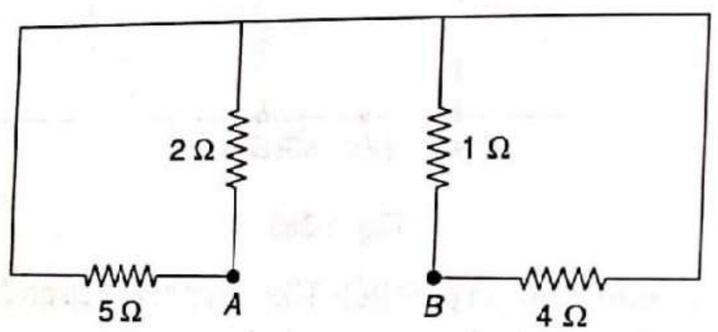

Fig. 1.368

In Fig. 1.368, resistors 5 Ω and 2 Ω are in parallel. Also resistors 1 Ω and 4 Ω are in parallel.

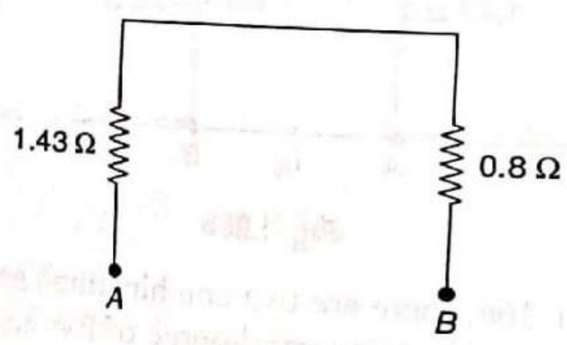

Fig. 1.369

Thus, $R_N = R_{AB} = 1.43 + 0.8 = 2.23\ \Omega$

Step III: Norton's equivalent circuit

Norton's equivalent circuit can be drawn as follows:

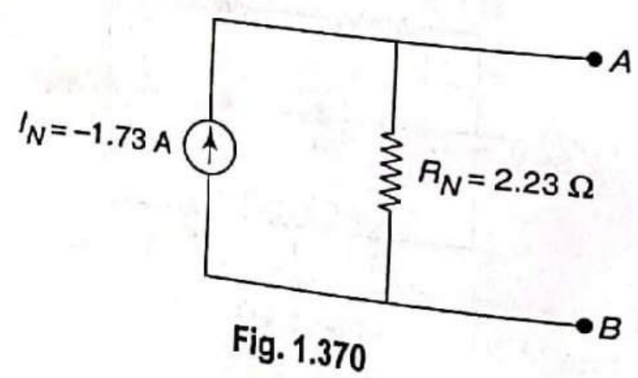

Fig. 1.370

1.19 Maximum Power Transfer Theorem

This theorem deals with transfer of maximum power from a source to load and may be stated as under:

In dc circuits, maximum power is transferred from a source to a load when the load resistance is made equal to the equivalent resistance of the network as viewed from the load terminals, with load removed and replacing all sources with their internal resistances.

Figure 1.371(a) shows a complex circuit supplying power to the load R_L. The circuit enclosed in a box can be replaced by Thevenin's equivalent circuit consisting of a single source of emf V_{TH} (called Thevenin voltage) in series with a single resistance R_{TH} (called Thevenin resistance), as shown in Fig. 1.371(b). Clearly, the resistance R_{TH} is the resistance measured between terminals A and B with R_L removed and replacing the sources with their internal resistances. According to maximum power transfer theorem, maximum power will be transferred from the circuit to the load when R_L is made equal to R_{TH}, the Thevenin's resistance at terminals A and B.

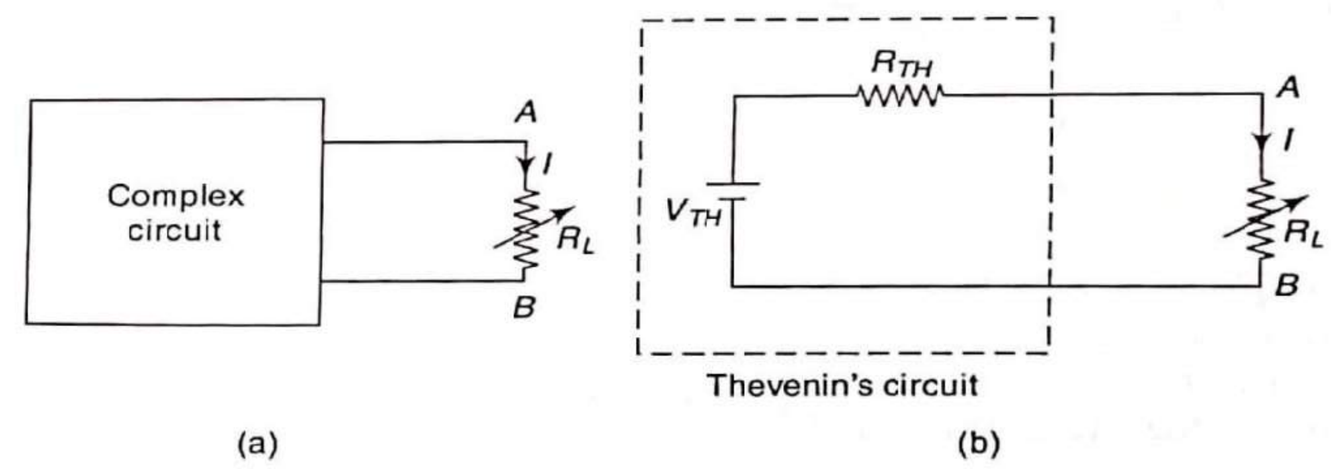

Fig. 1.371 Illustration of maximum power transfer theorem

Proof

Referring to Fig. 1.371(b), the current supplied to R_L is given by

$$I = \frac{V_{TH}}{R_L + R_{TH}}$$

Power delivered to R_L, $P = I^2 R_L = \left(\dfrac{V_{TH}}{R_L + R_{TH}}\right)^2 \times R_L = \dfrac{V_{TH}^2 R_L}{(R_L + R_{TH})^2}$ (i)

For a given circuit, V_{TH} and R_{TH} are constants. Therefore, power delivered to the load depends upon R_L. In order to find the value of R_L for which the value of P is maximum, it is necessary to differentiate Eq. (i) w.r.t. R_L and set the result equal to zero,

i.e., for P_{max}, $\dfrac{dP}{dR_L} = 0$.

So, differentiating Eq. (i) w.r.t. R_L, we get

$$\frac{dP}{dR_L} = \frac{(R_{TH} + R_L)^2 V_{TH}^2 - V_{TH}^2 R_L (2R_{TH} + 2R_L)}{(R_{TH} + R_L)^4} = 0$$

or $\quad (R_{TH} + R_L)^2 V_{TH}^2 - V_{TH}^2 R_L (2R_{TH} + 2R_L) = 0$

or $\quad (R_{TH} + R_L)\, V_{TH}^2\, [(R_{TH} + R_L) - 2R_L] = 0$

or $\quad R_{TH} - R_L = 0$

or $\quad R_L = R_{TH}$

This proves the maximum power transfer theorem.

Power delivered to R_L is given by

$$P = \frac{V_{TH}^2 R_L}{(R_L + R_{TH})^2}$$

When $R_L = R_{TH}$, $P = P_{max}$.

So, $$P_{max} = \frac{V_{TH}^2 R_{TH}}{(R_{TH} + R_{TH})^2}$$

or $$P_{max} = \frac{V_{TH}^2}{4R_{TH}} \text{ W}$$

Example 1.86 Calculate the value of R_L for it to absorb the maximum power and find out the maximum power in the circuit of Fig. 1.372.

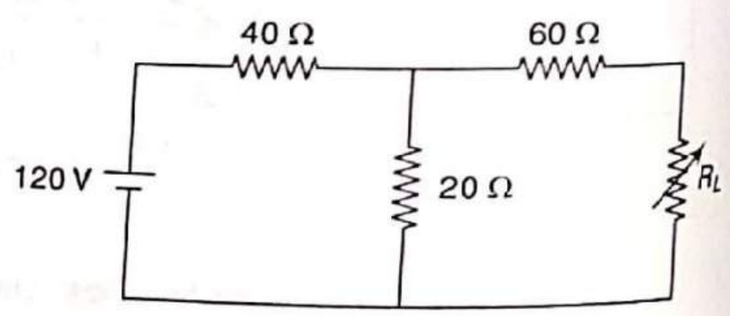

Fig. 1.372

Solution

According to maximum power transfer theorem, maximum power will be transferred from the circuit to the load when R_L is made equal to R_{TH}, the Thevenin's resistance at terminals A and B. Load terminals are marked as A and B.

Calculation of R_{TH}

Removing the load resistance from the network and replacing the voltage source by short circuit, we get the modified network as shown in Fig. 1.373.

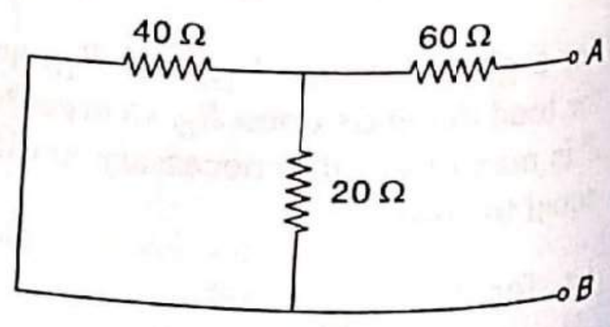

Fig. 1.373

In Fig. 1.373, equivalent resistance across the load terminals A and B is called Thevenin's resistance R_{TH}.

By series-parallel circuit reduction techniques, we have

$$R_{TH} = R_{AB} = (40 \parallel 20) + 60 = 13.33 + 60 = 73.33\ \Omega$$

Thus, when $R_L = 73.33\ \Omega$, it absorbs the maximum power.

The maximum power, P_{max} is given by

$$P_{max} = \frac{V_{TH}^2}{4R_{TH}} \text{ W}$$

Thus, for calculation of P_{max} (maximum power), V_{TH} is required.

Calculation of V_{TH}

Removing the load resistance from the network, we get the following network:

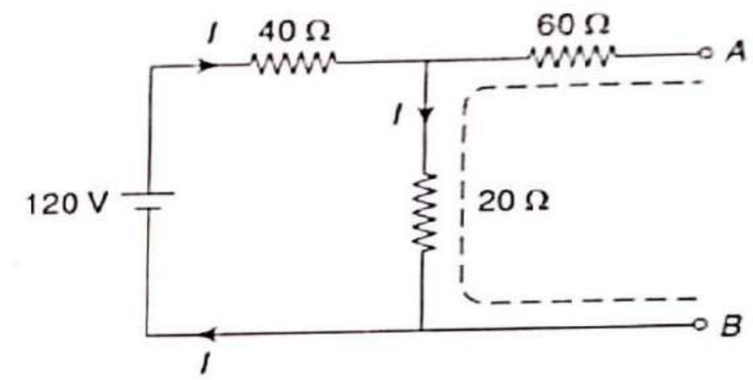

Fig. 1.374

In Fig. 1.374, voltage appears across the load terminals A and B, which is called Thevenin's voltage V_{TH}. For calculation of V_{TH}, i.e., V_{AB}, the selected path from A to B is marked by dotted line in Fig. 1.374. As this path contains the 20 Ω resistor, current through this resistance is required. The 120 V source produces the total current I A, which flows through 20 Ω resistor.

By Ohm's law,

circuit current, $I = \dfrac{120}{40 + 20} = 2$ A

Hence, $V_{TH} = V_{AB}$

$= (20 \times 2) + (60 \times 0)$

$= 40$ V

Now, P_{max} can be calculated as

$$P_{max} = \frac{V_{TH}^2}{4R_{TH}} = \frac{(40)^2}{4 \times 73.33} = 5.45 \text{ W}$$

Example 1.87 Find the magnitude of R_L for the maximum power transfer to the circuit shown in Fig. 1.375. Also find out the maximum power.

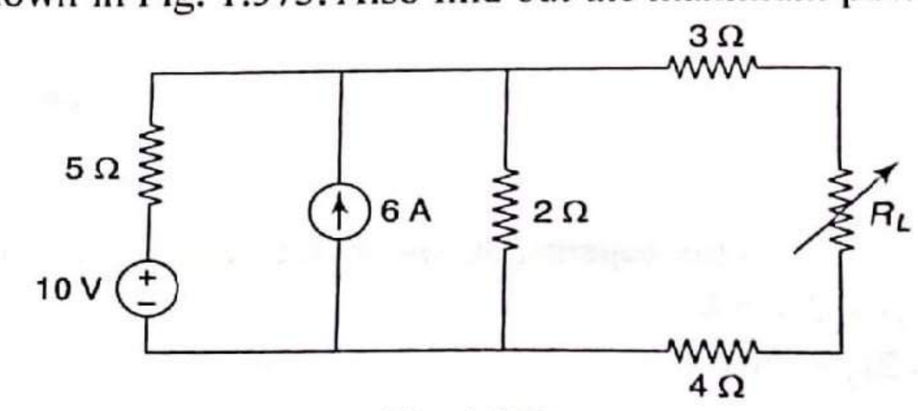

Fig. 1.375

Solution

According to maximum power transfer theorem, maximum power will be transferred from the circuit to the load when R_L is made equal to R_{TH}, the Thevenin's resistance at terminals A and B. Load terminals are marked as A and B.

Calculation of R_{TH}

Removing the load resistance from the network and replacing the voltage source by short circuit and current source by open circuit, we get the following network:

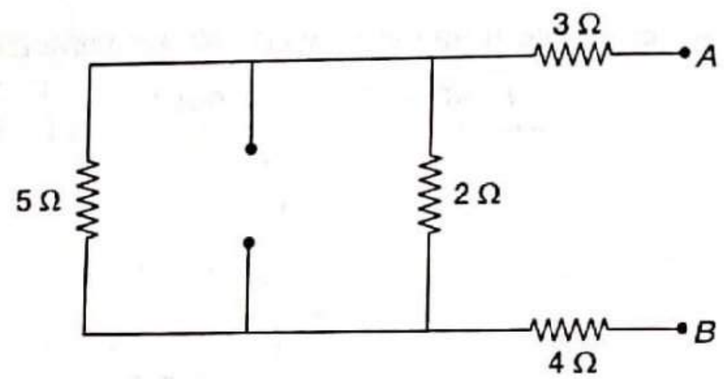

Fig. 1.376

In Fig. 1.376, equivalent resistance across the load terminals A and B is called Thevenin's resistance R_{TH}.

By series-parallel circuit reduction techniques, we have

$$R_{TH} = R_{AB} = (5 \parallel 2) + 3 + 4 = 1.43 + 3 + 4 = 8.43\ \Omega$$

Thus, when $R_L = 8.43\ \Omega$, maximum power is transferred to the circuit.

Calculation of V_{TH}

Removing the load resistance from the network, we get the modified network as shown in Fig. 1.377.

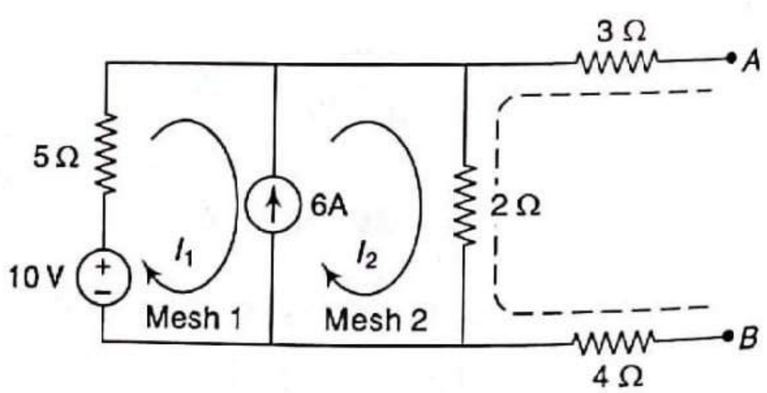

Fig. 1.377

In Fig. 1.377, voltage appears across the load terminals A and B, which is called Thevenin's voltage V_{TH}. For calculation of V_{TH}, i.e., V_{AB}, the selected path from A to B is marked by dotted line in Fig. 1.377. As this path contains the resistor 2 Ω, current through this resistance is required. The required current can be calculated by mesh analysis. Mesh 1 and mesh 2 form a supermesh.

By expressing the current in the common branch in terms of mesh currents, we get the current equation as

$$I_2 - I_1 = 6 \qquad \text{(i)}$$

By applying the KVL to the supermesh, we get the voltage equation as

$$10 - 5I_1 - 2I_2 = 0$$

or $$-5I_1 - 2I_2 = -10 \qquad \text{(ii)}$$

Solving Eqs (i) and (ii),

$$I_2 = 5.71\ \text{A}$$

$$V_{TH} = V_{AB}$$
$$= (4 \times 0) + (2 \times 5.71) + (3 \times 0)$$
$$= 11.42\ \text{V}$$

Now, P_{max} can be calculated as

$$P_{max} = \frac{V_{TH}^2}{4R_{TH}} = \frac{(11.42)^2}{4 \times 8.43} = 3.87\ \text{W}$$

Example 1.88 In the network of Fig. 1.378, determine the maximum power delivered to R_L.

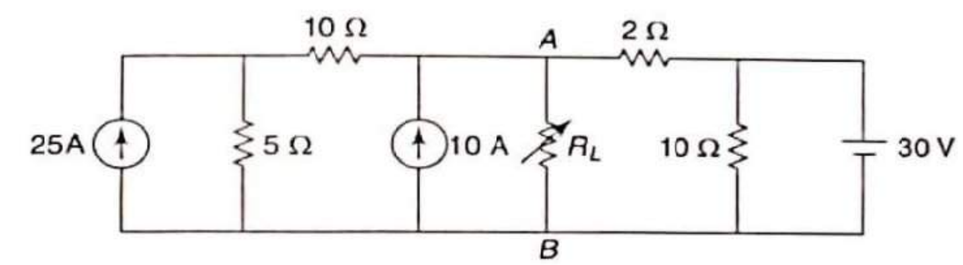

Fig. 1.378

Solution

According to maximum power transfer theorem, maximum power will be transferred from the circuit to the load when R_L is made equal to R_{TH}, the Thevenin's resistance at terminals A and B. Load terminals are marked as A and B.

Calculation of R_{TH}

Removing the load resistance from the network and replacing the voltage source by short circuit and current sources by open circuits, we get the following network:

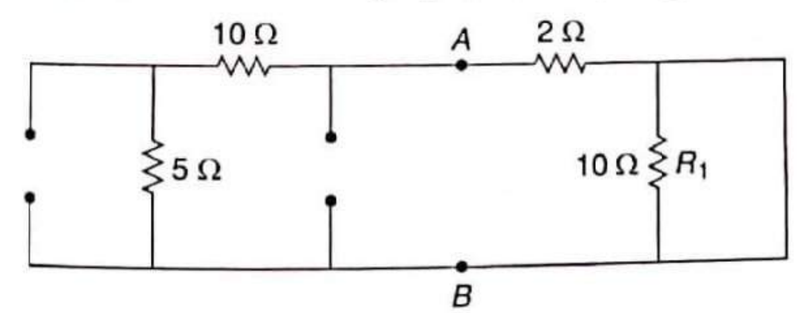

Fig. 1.379

In Fig. 1.379, equivalent resistance across the load terminals A and B is called Thevenin's resistance R_{TH}. Resistor R_1 gets short circuited, so removing it, we get the network as shown below:

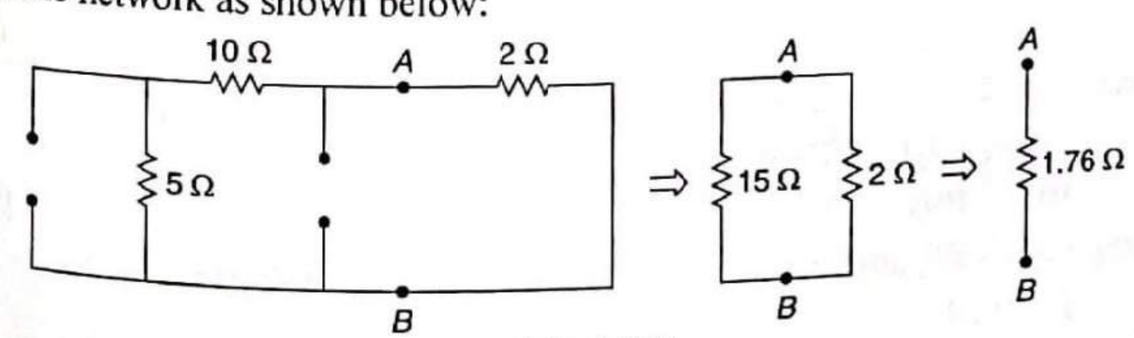

Fig. 1.380

We have $R_{TH} = R_{AB} = 1.76\ \Omega$

Thus, when $R_L = 1.76\ \Omega$, maximum power is transferred to the circuit.

Calculation of V_{TH}

Removing the load resistance from the network, we get the following network:

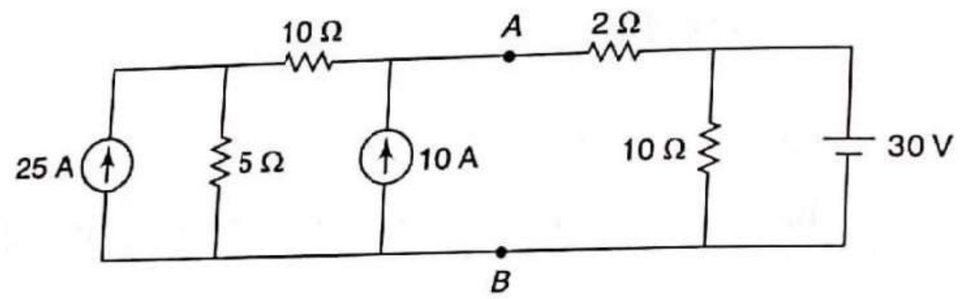

Fig. 1.381

By source transformation, i.e., converting parallel combination of current source of 25 A and resistor of 5 Ω into equivalent series combination of voltage source and resistor, we get the modified network as shown in Fig. 1.382.

In Fig. 1.382, voltage appears across the load terminals A and B, which is called Thevenin's voltage V_{TH}. For calculation of V_{TH}, i.e., V_{AB}, the selected path from A to B is marked by dotted line in Fig. 1.382. As this path contains the 2 Ω resistor, current through this resistance is required. The required current can be calculated by mesh analysis.

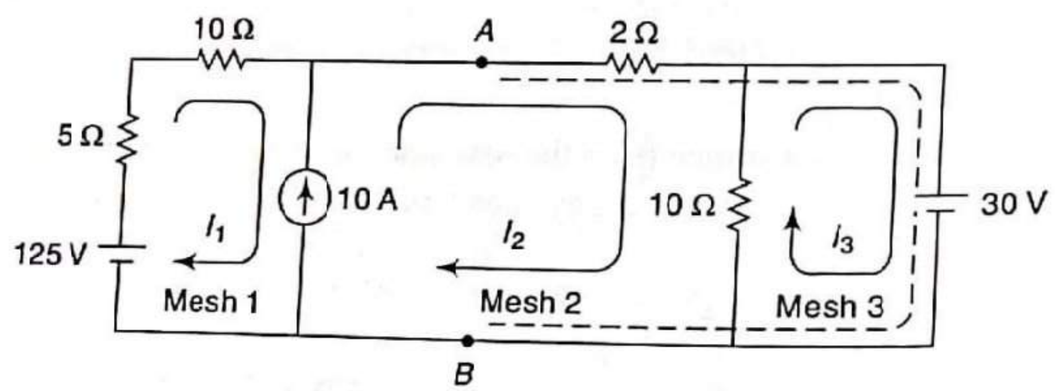

Fig. 1.382

Mesh 1 and mesh 2 form a supermesh.

Expressing the current in the common branch, we get the current equation as

$$I_2 - I_1 = 10 \qquad \text{(i)}$$

Applying the KVL to the supermesh, we get the voltage equation as

$$-10I_1 - 2I_2 - 10(I_2 - I_3) + 125 - 5I_1 = 0$$

or $$-15I_1 - 12I_2 + 10I_3 = -125 \qquad \text{(ii)}$$

Applying the KVL to mesh 3,

$$-10(I_3 - I_2) - 30 = 0$$

or $$10I_2 - 10I_3 = 30 \qquad \text{(iii)}$$

Solving Eqs (i), (ii) and (iii),

$$I_2 = 14.41\ \text{A}$$

Hence, $I_{2\,\Omega} = 14.41\ \text{A}(\rightarrow)$

Further, we get $V_{TH} = V_{AB}$

$$= 30 + (2 \times 14.41)$$
$$= 30 + 28.82$$
$$= 58.82\ \text{V}$$

Now, P_{max} can be calculated as

$$P_{max} = \frac{V_{TH}^2}{4R_{TH}} = \frac{(58.82)^2}{4 \times 1.76} = 491.45\ \text{W}$$

Example 1.89 Find the value of R_L for maximum power transfer and also calculate the maximum power transferred to R_L in the network of Fig. 1.383.

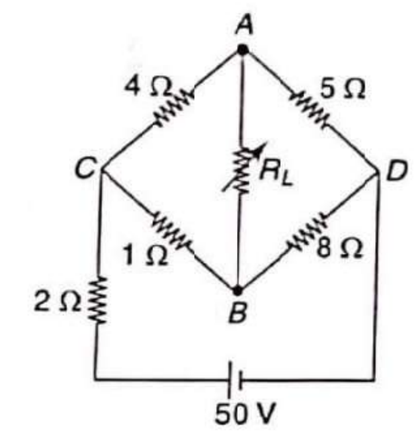

Fig. 1.383

Solution

According to maximum power transfer theorem, maximum power will be transferred from the circuit to the load when R_L is made equal to R_{TH}, the Thevenin's resistance at terminals A and B. Load terminals are marked as A and B.

Calculation of R_{TH}

Removing the load resistance from the network and replacing the voltage source by short circuit, we get the network as shown in Fig. 1.384.

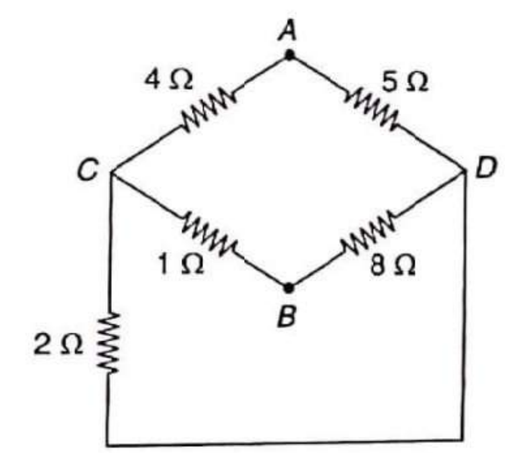

Fig. 1.384

In Fig. 1.384, equivalent resistance across the load terminals A and B is called Thevenin's resistance R_{TH}. For simplification, the circuit can be redrawn as shown in Fig. 1.385.

Converting the delta connections formed by 4 Ω, 5 Ω, and 2 Ω resistors ($\Delta\ CAD$) into equivalent star network, i.e., $\Delta\ CAD \Rightarrow Y\ CAD$, we obtain the modified network as shown in Fig. 1.386.

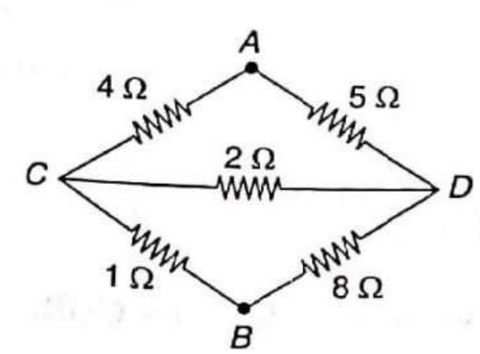

Fig. 1.385

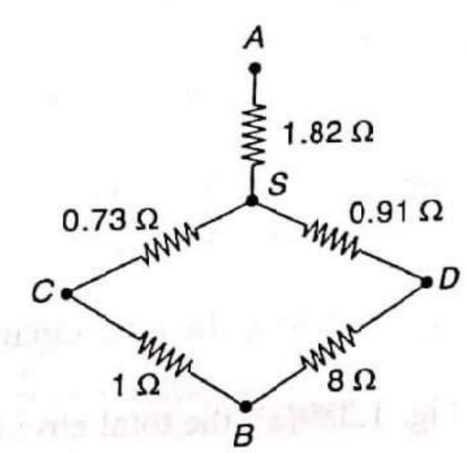

Fig. 1.386

By series-parallel circuit-reduction techniques, we get the following network:

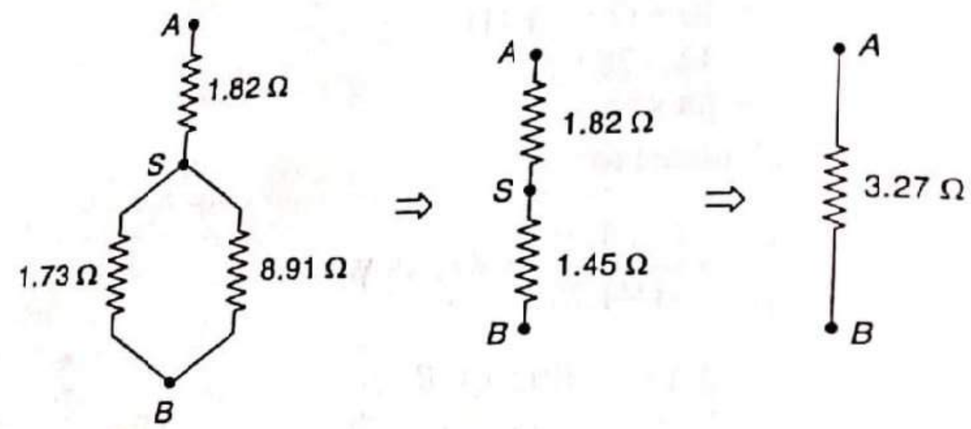

Fig. 1.387

Thus, $R_{TH} = R_{AB} = 3.27\ \Omega$. Hence, when $R_L = 3.27\ \Omega$, maximum power is transferred to the circuit.

Calculation of V_{TH}

Removing the load resistance from the network, we get the following circuit:

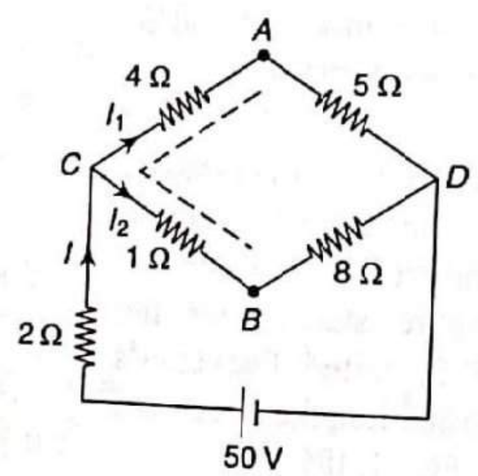

Fig. 1.388

In Fig. 1.388, voltage appears across the load terminals A and B, which is called Thevenin's voltage V_{TH}. For calculation of V_{TH}, i.e., V_{AB}, the selected path from A to B is marked by dotted line in Fig. 1.388. As this path contains the resistors 1 Ω and 4 Ω, currents through these resistances are required. In Fig. 1.388, the actual directions of currents are marked. The 50 V source produces the total current I A, which divides at node C. Let current through branch CAD is I_1 and current through branch CBD is I_2. By using series-parallel circuit-reduction techniques, we get the circuits as shown in Fig. 1.389.

From Fig. 1.389(b), the total circuit current, $I = \dfrac{50}{2+4.5} = 7.69$ A

From Fig. 1.389(a), the total circuit current divides at node C. By CDR,

$$I_1 = 7.69 \times \frac{9}{9+9} = 3.845 \text{ A}$$

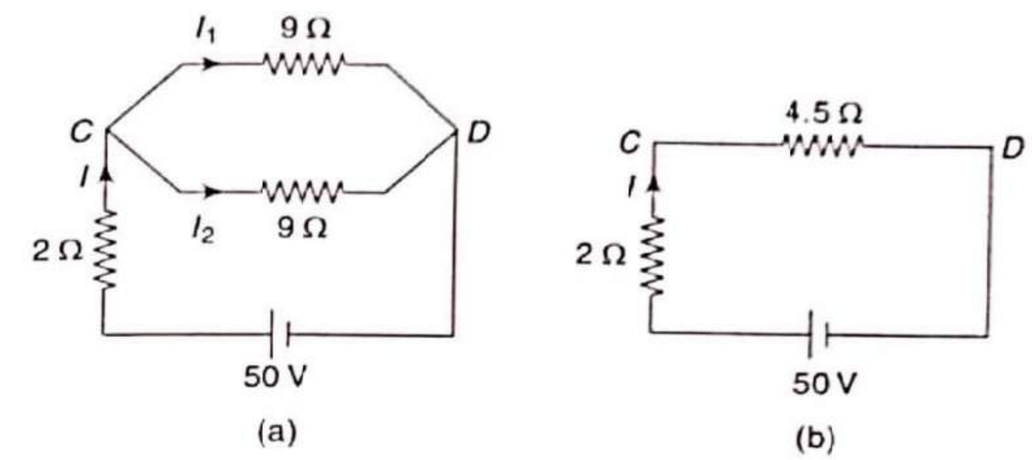

Fig. 1.389

$$I_2 = 7.69 \times \frac{9}{9+9} = 3.845 \text{ A}$$

We now have $V_{TH} = (1 \times I_2) - (4 \times I_1) = (1 \times 3.845) - (4 \times 3.845) = -11.54$ V

Hence, $P_{max} = \dfrac{V_{TH}^2}{4R_{TH}} = \dfrac{(11.54)^2}{4 \times 3.27} = 10.18$ W

EXERCISES

1. Explain the concept of source transformation with suitable example.
2. Derive the relation to express three star-connected resistances into equivalent delta.
3. State and explain superposition theorem.
4. State and explain Thevenin's theorem.
5. State and explain Norton's theorem.
6. State and prove the maximum power transfer theorem.
7. Three resistors R_1, R_2, R_3 are connected in star. If this network is equivalent to delta-connected resistors R_a, R_b, R_c, prove that (refer to Fig. 1.390)

$$R_a = R_2 + R_3 + \frac{R_2 R_3}{R_1}$$

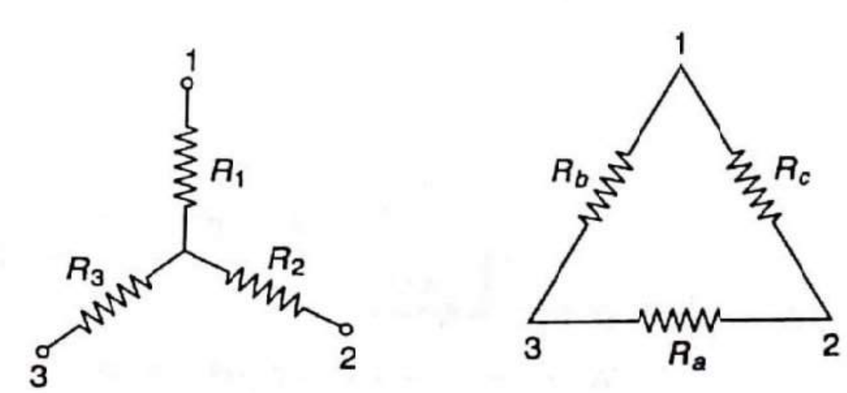

Fig. 1.390

8. Three resistors R_A, R_B, R_C are connected in delta. If this network is equivalent to star-connected resistors R_1, R_2 R_3, prove that (refer to Fig. 1.391)

$$R_1 = \frac{R_B R_C}{R_A + R_B + R_C}$$

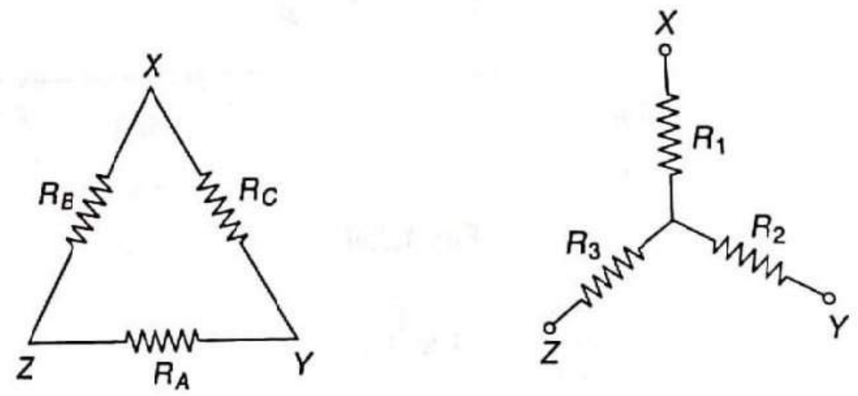

Fig. 1.391

9. A certain winding made of copper has resistance of 100 Ω at room temperature. The resistance temperature coefficient of copper at 0°C is 0.00428/°C. Calculate the winding resistance if temperature is increased to 50°C. Assume room temperature as 50°C. [*Ans.* 109.67 Ω]

10. A coil has 25 Ω resistance at 40°C and 45 Ω resistance at 100°C. Find its resistance and resistance temperature coefficient at 0°C.

[*Ans.* 11.68 Ω; 0.0285/°C]

11. Find the resistance between points X and Y in the network of Fig. 1.392.

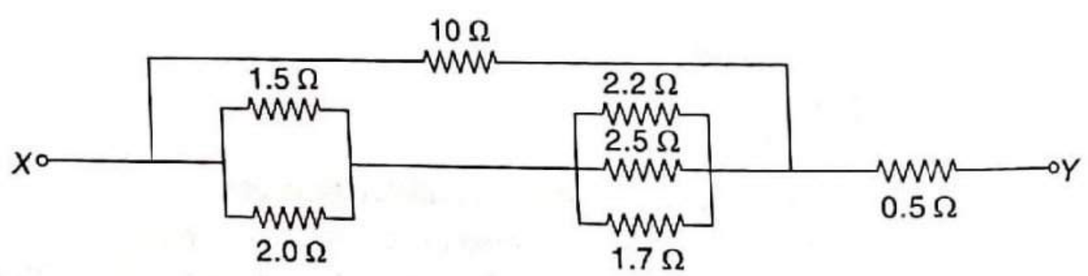

Fig. 1.392

[*Ans.* 1.84 Ω]

12. Calculate the total resistance of the network between points A and B in the network shown in Fig. 1.393.

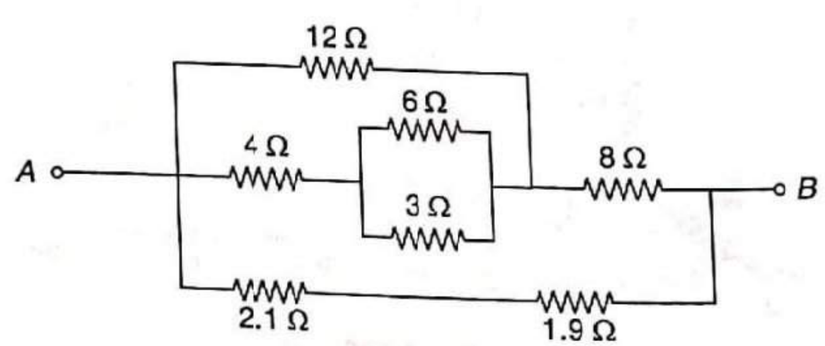

Fig. 1.393

[*Ans.* 3 Ω]

13. In the circuit of Fig. 1.394 shown below, find the value of R.

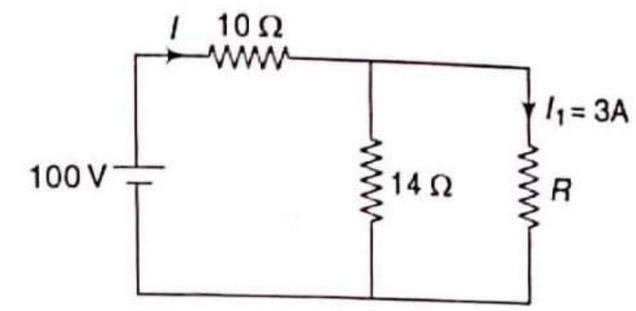

Fig. 1.394

[*Ans.* 13.61 Ω]

14. For the network shown in Fig. 1.395, find the equivalent resistance across the terminals A and B and (ii) the current and power supplied by the battery.

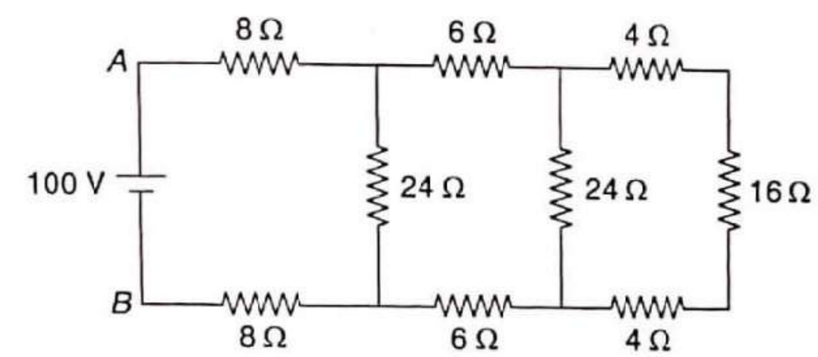

Fig. 1.395

[*Ans.* 28 Ω; 3.57 A; 357 W]

15. In the circuit of Fig. 1.396, calculate the currents in other resistors, the value of unknown resistance X, and the equivalent resistance across AB.

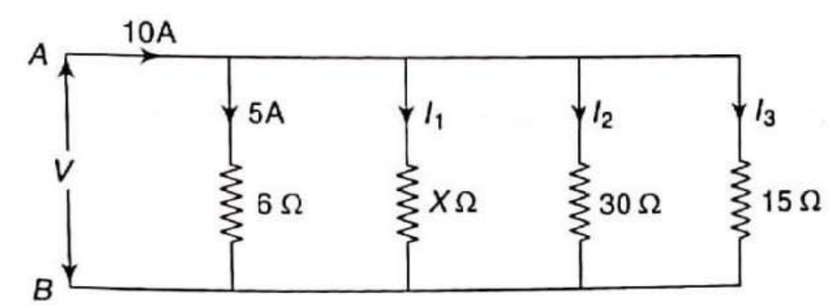

Fig. 1.396

[*Ans.* 2 A; 1 A; 2 A; 15 Ω; 3 Ω]

16. Find the voltage to be applied across AB in order to drive a current of 10 A in the circuit shown in Fig. 1.397. Use star-delta transformations.

[*Ans.* 119.94 V]

17. For the network shown in Fig. 1.398, find the equivalent resistance across the terminals A and B. [*Ans.* 10 Ω]

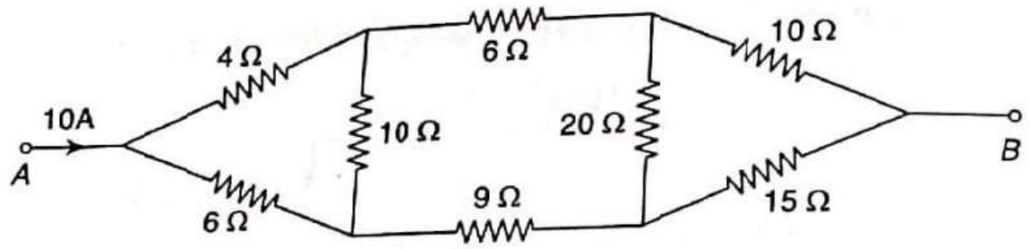

Fig. 1.397

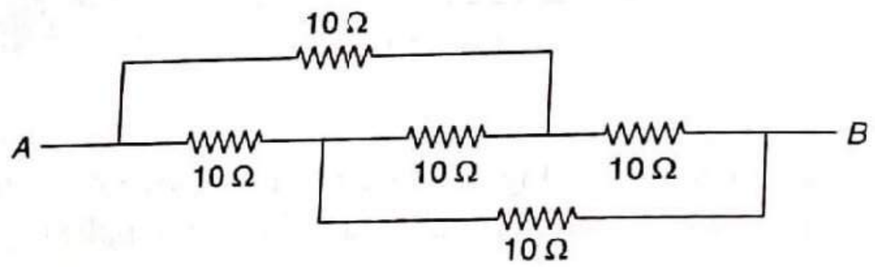

Fig. 1.398

18. For the network shown in Fig. 1.399, find the equivalent resistance across the terminals *B* and *C*.

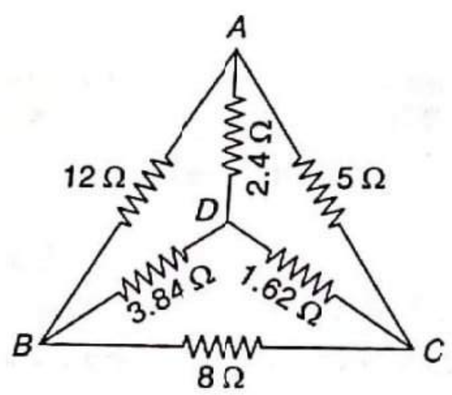

Fig. 1.399

[*Ans.* 2.72 Ω]

19. Determine the current drawn by the circuit from the battery in the circuit shown in Fig. 1.400.

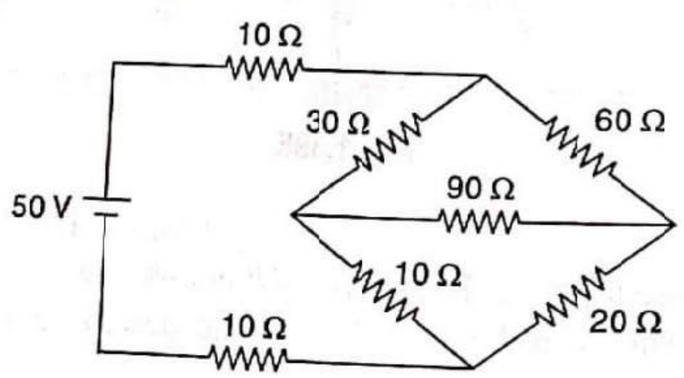

Fig. 1.400

[*Ans.* 1.07A]

20. For the circuit shown in Fig. 1.401, find V_{EC} and V_{AG}.

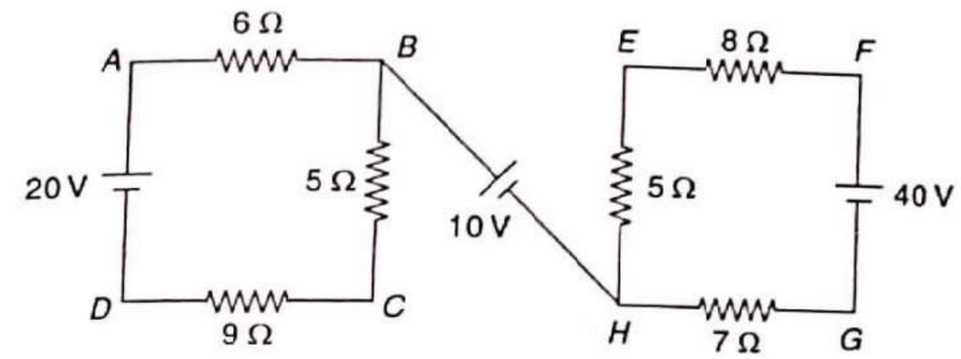

Fig. 1.401

[*Ans.* 5 V; 30 V]

21. Find the voltage V_{AB} in the circuit shown in Fig. 1.402.

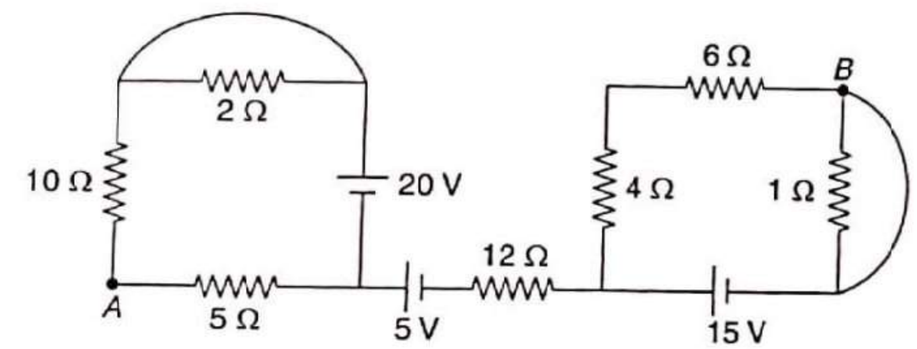

Fig. 1.402

[*Ans.* 26.67 V]

22. For the network shown in Fig. 1.403, find the equivalent resistance across the terminals *A* and *B*.

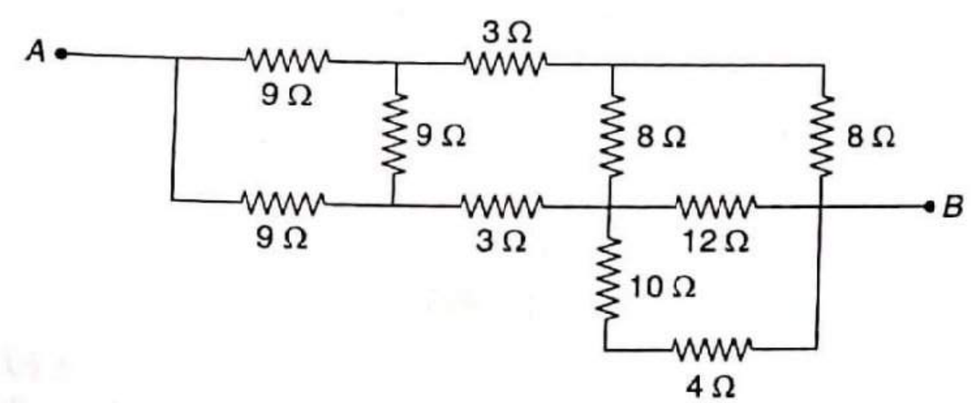

Fig. 1.403

[*Ans.* 9.58 Ω]

23. Find the value of *R* and current flowing through it in the network of Fig. 1.404 when current in branch *OA* is zero.

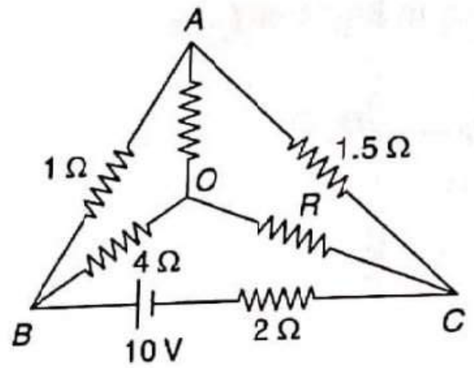

Fig. 1.404

[*Ans.* 6 Ω; 0.5 A]

24. Find the current through 30 Ω resistor by mesh analysis in the network shown in Fig. 1.405.

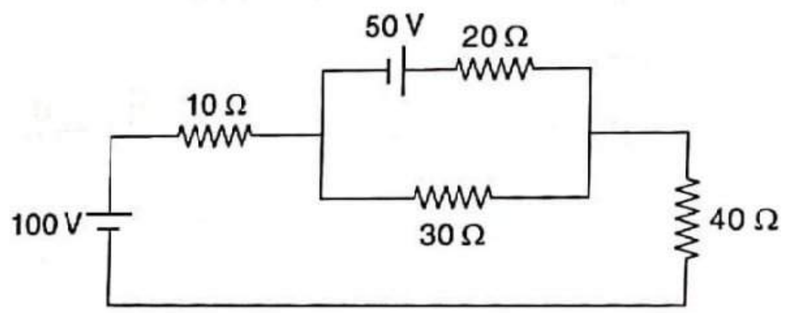

Fig. 1.405

[*Ans.* 0.161 A (←)]

25. Find the current through 10 Ω resistor by mesh analysis in the network shown in Fig. 1.406.

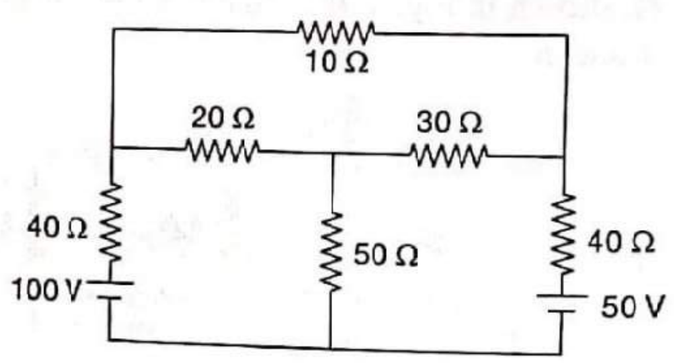

Fig. 1.406

[*Ans.* 0.4023 A (→)]

26. Find the current through 10 Ω resistor by mesh analysis in the network shown in Fig. 1.407.

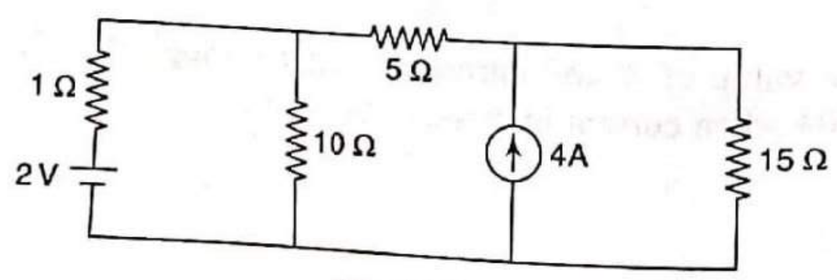

Fig. 1.407

[*Ans.* 0.435 A (↓)]

27. Using nodal analysis, find the current through 5 Ω resistor in the network shown in Fig. 1.408.

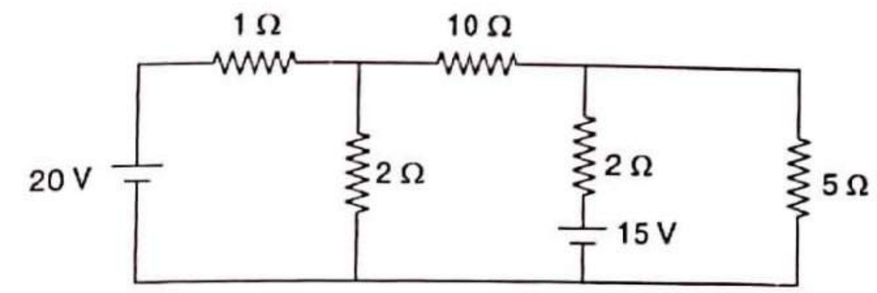

Fig. 1.408

[*Ans.* 2.205 A (↓)]

28. Using nodal analysis, find the current through 50 Ω resistor in the network shown in Fig. 1.409.

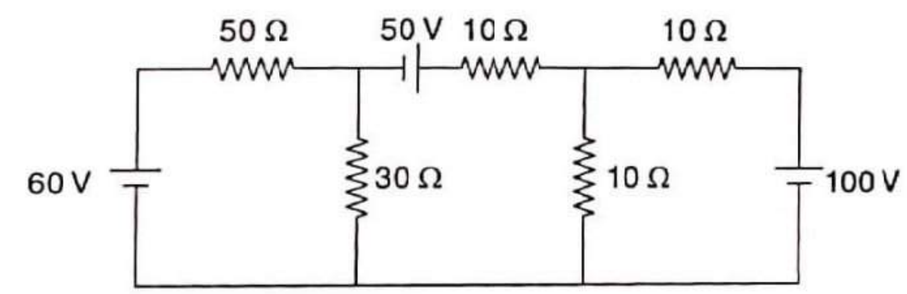

Fig. 1.409

[*Ans.* 1 A (→)]

29. Using node-pair voltage method, find the current through 100 Ω resistor in the network shown in Fig. 1.410.

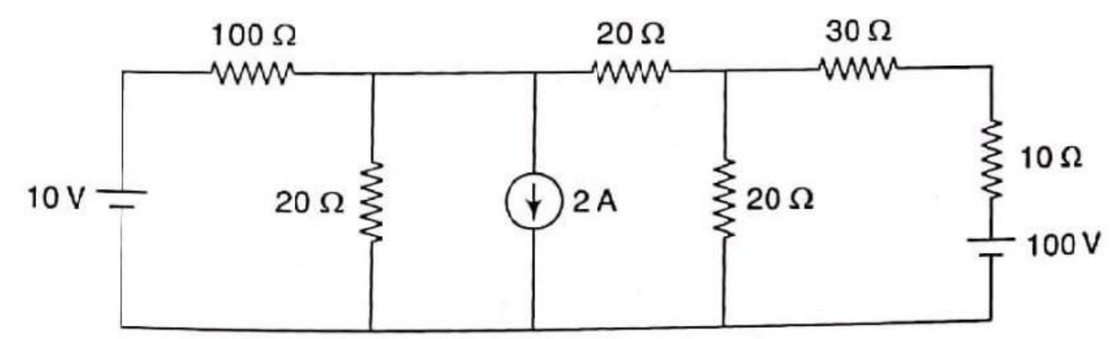

Fig. 1.410

[*Ans.* 0.2 A (→)]

30. By using superposition theorem, calculate the value of current in the 8 Ω resistor in the network shown in Fig. 1.411.

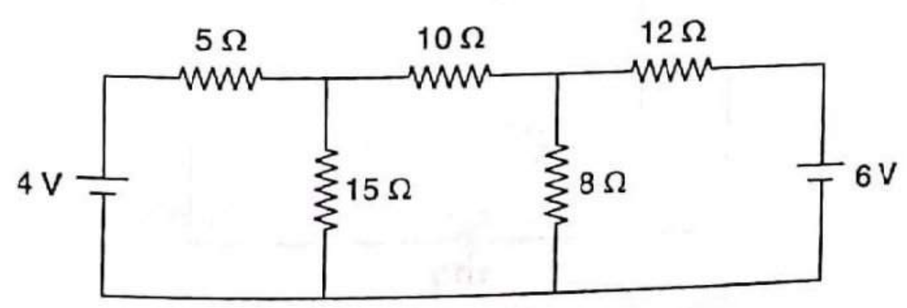

Fig. 1.411

[*Ans.* 0.3198 A (↓)]

31. By using superposition theorem, calculate the power dissipated in 9 Ω resistor in the network shown in Fig. 1.412.

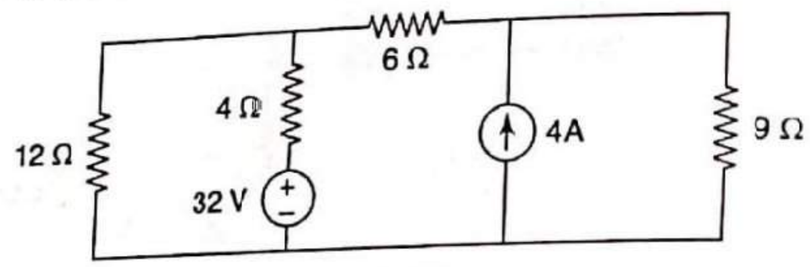

Fig. 1.412

[*Ans.* 100 W]

32. Using Thevenin's theorem, find the current through 5 Ω resistor in the network shown in Fig. 1.413.

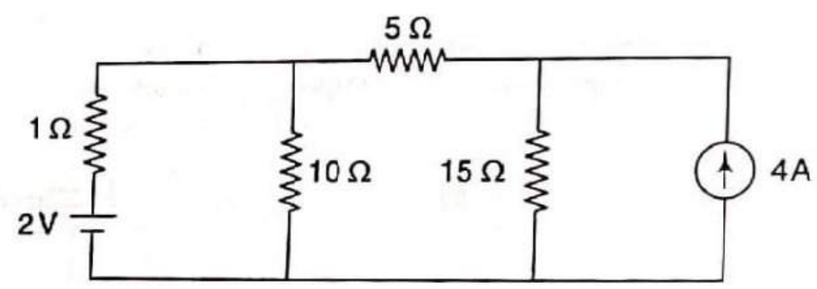

Fig. 1.413

[*Ans.* 2.783 A (←)]

33. Using Thevenin's theorem, find the current through 5 Ω resistor in the network shown in Fig. 1.414.

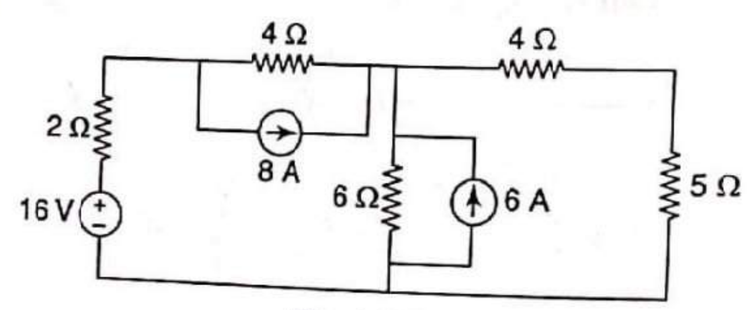

Fig. 1.414

[*Ans.* 3.5 A (↓)]

34. Find the current in branch *BD* in the circuit of Fig. 1.415 by using Thevenin's theorem.

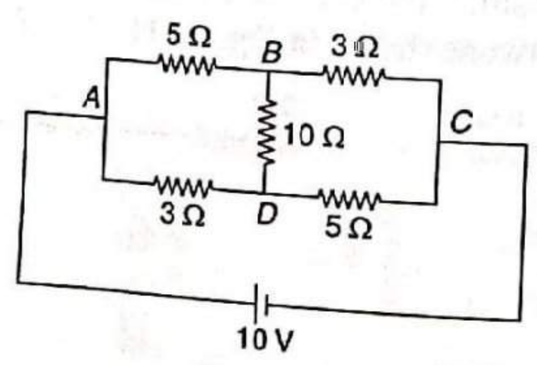

Fig. 1.415

[*Ans.* 0.182 A from *D* to *B*]

35. Find the current in 20 Ω resistor in the network of Fig. 1.416 by using Thevenin's theorem.

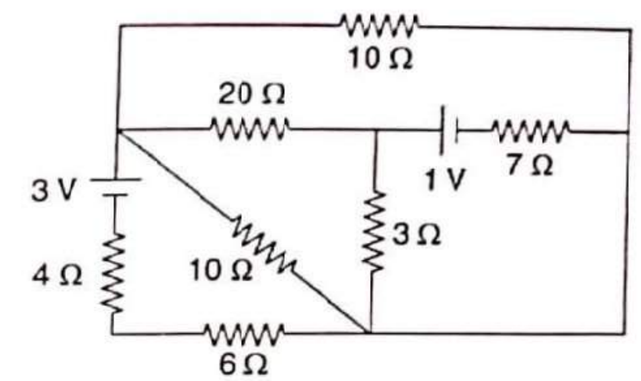

Fig. 1.416

[*Ans.* 0.028 A (→)]

36. Using Norton's theorem, find the current in 30 Ω resistor in the network of Fig. 1.417.

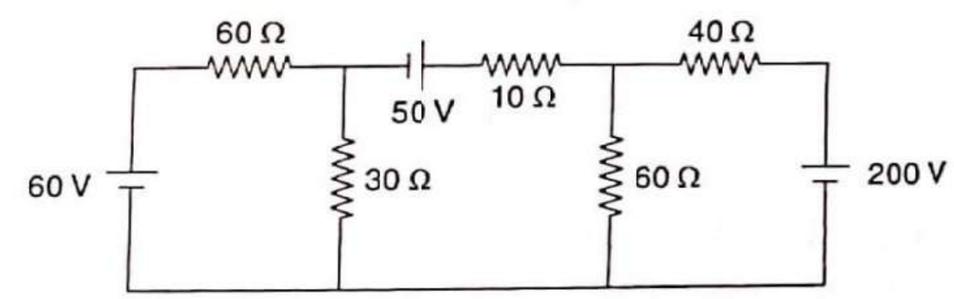

Fig. 1.417

[*Ans.* 1.28 A (↓)]

37. Find the current in 10 Ω resistor in the network of Fig. 1.418 by using Norton's theorem.

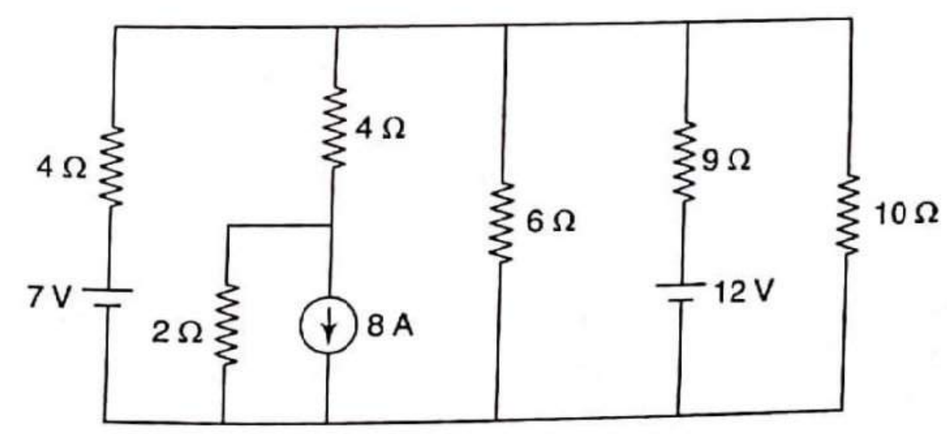

Fig. 1.418

[*Ans.* 0.053 A (↓)]

38. Find the current in 4 Ω resistor in the network of Fig. 1.419 by using Norton's theorem.

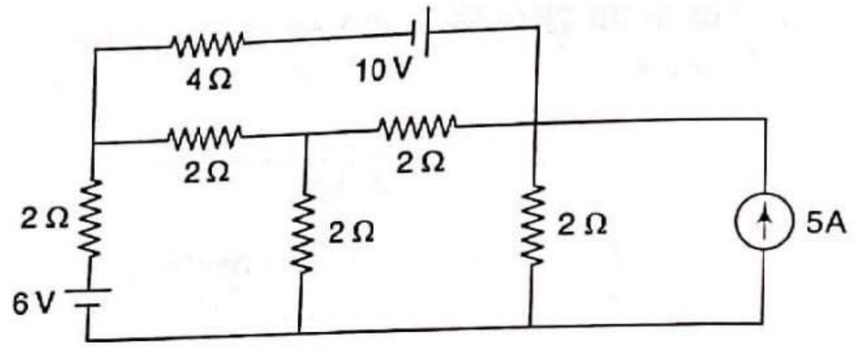

Fig. 1.419

[*Ans.* 1.33 A (→)]

39. Calculate the value of R that will absorb maximum power from the circuit of Fig. 1.420. Also compute the value of maximum power.

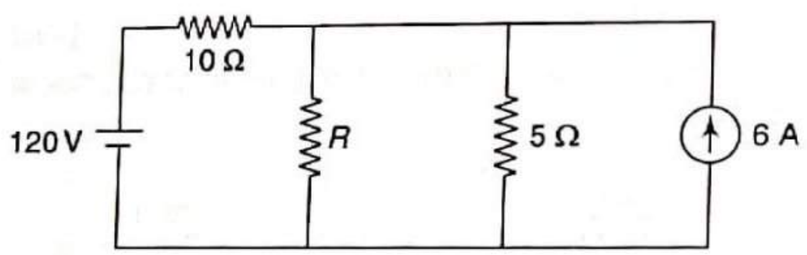

Fig. 1.420

[*Ans.* 3.33 Ω; 270 W]

40. In the Fig. 1.421, R_{AD} is variable resistance. If 110 V source is connected across XY with X terminal positive, find R_{AD} for maximum power transfer.

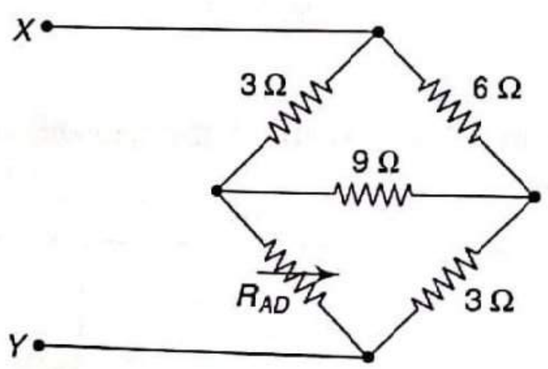

Fig. 1.421

[*Ans.* 2.357 Ω]

41. Calculate the value of R that will absorb maximum power from the circuit of Fig. 1.422. Also compute the value of maximum power.

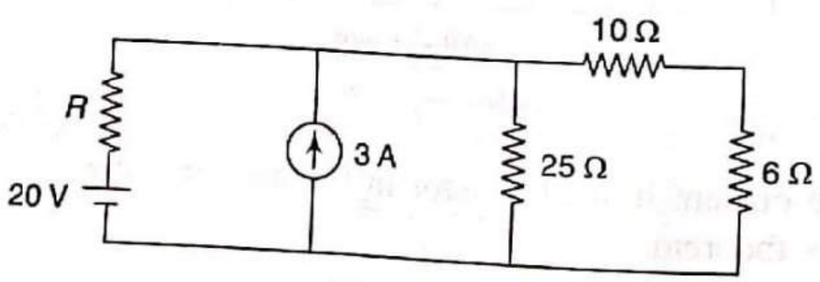

Fig. 1.422

[*Ans.* 9.756 Ω; 2.202 W]

42. For the circuit shown in Fig. 1.423, find the value of resistance R for maximum power and calculate maximum power.

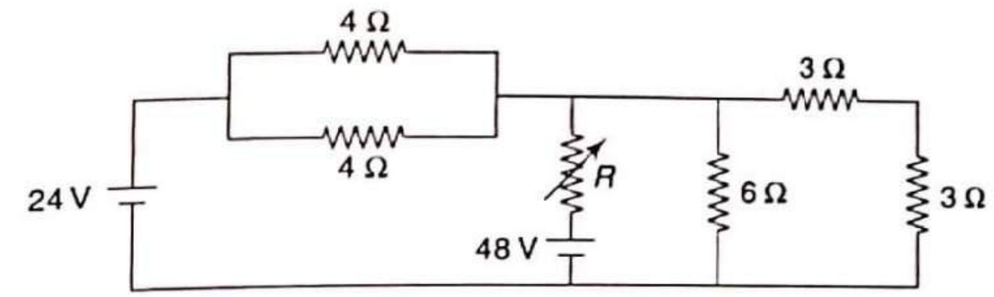

Fig. 1.423

[*Ans.* 1.2 Ω; 235.2 W]

43. In the circuit shown in Fig. 1.424, find the current through the lamp, when the switch is closed.

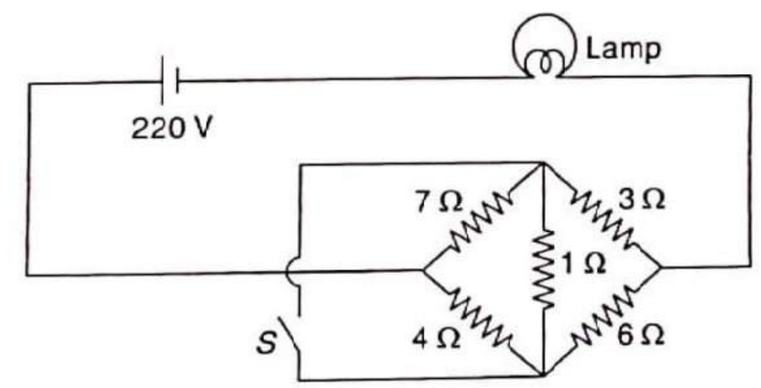

Fig. 1.424

[*Ans.* 48.4 A]

44. For the network shown in Fig. 1.425, Find V_1/V_0 and V_2/V_0.

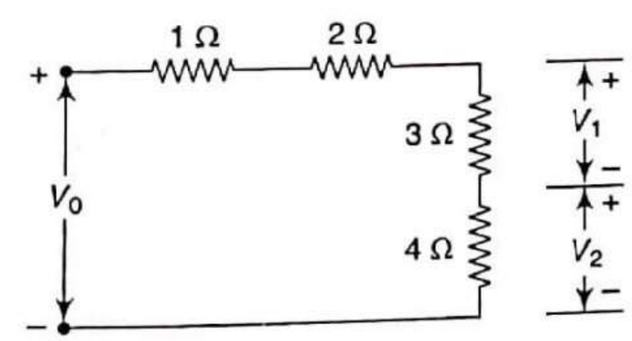

Fig. 1.425

[*Ans.* 3/10; 4/10]

45. In the circuit shown in Fig. 1.426, find the current in 4 Ω resistor using both Thevenin's theorem and superposition theorem.

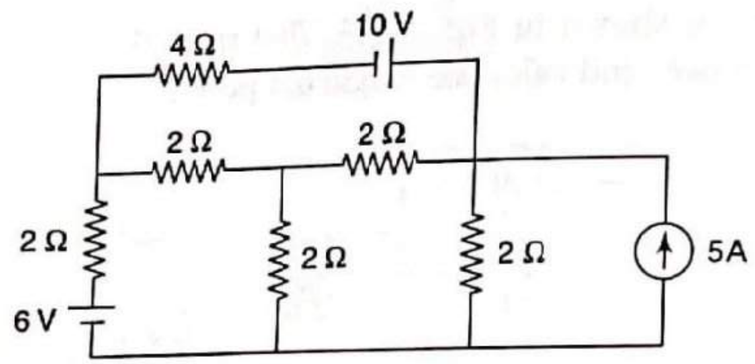

Fig. 1.426

[*Ans.* 1.33 A (→)]

46. Find the value of I_x in the circuit shown in Fig. 1.427, by the method of nodal analysis.

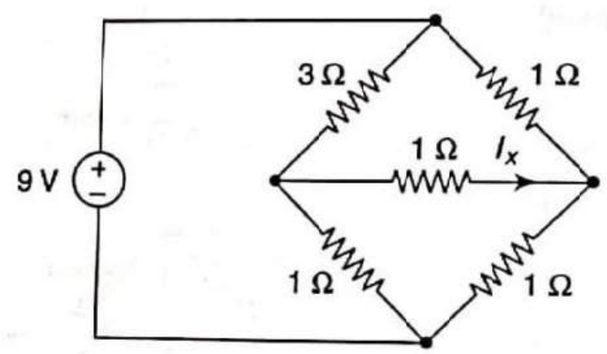

Fig. 1.427

[*Ans.* 1 A]

47. In the circuit shown in Fig. 1.428, determine V_{AB} and the voltage drop across 8 Ω resistor so that the voltage drop across the 15 Ω resistor is 45 V when the switch S is open.

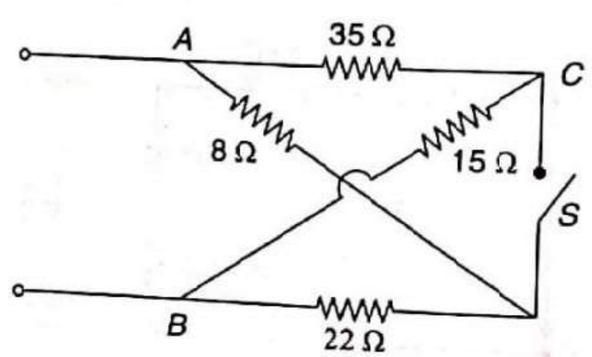

Fig. 1.428

[*Ans.* 150 V; 40 V]

48. By using superposition theorem, determine the current through the branch AB of the network shown in Fig. 1.429.

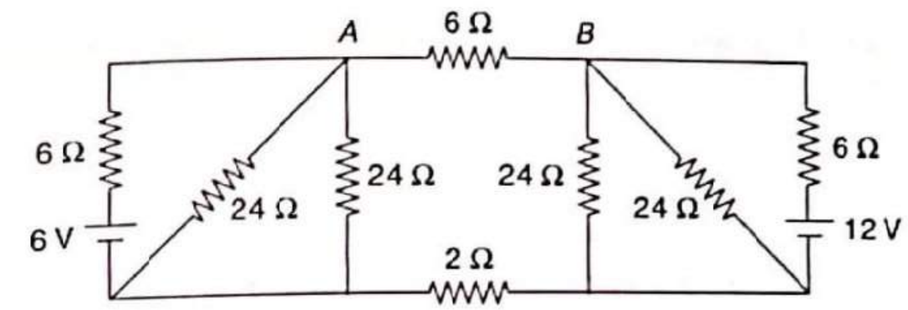

Fig. 1.429

[*Ans.* 0.25 A (←)]

49. In Fig. 1.430, find the magnitude of R_L for the maximum power transfer between the terminals A and B and also find the magnitude of the maximum power.

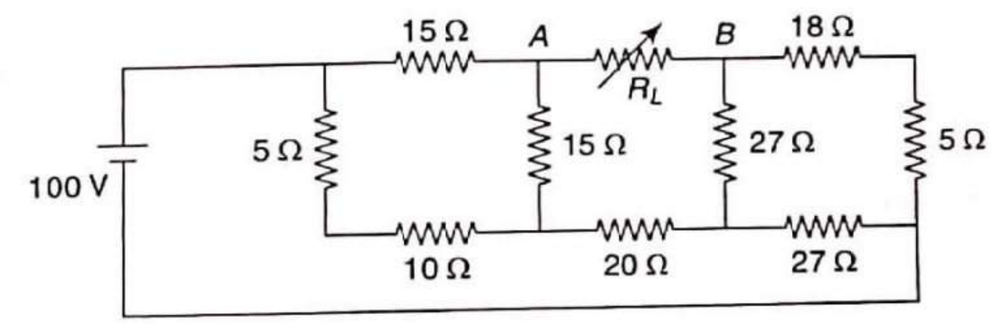

Fig. 1.430

[*Ans.* 23.91 Ω; 52.53 W]

50. In Fig. 1.431, find the maximum power in R.

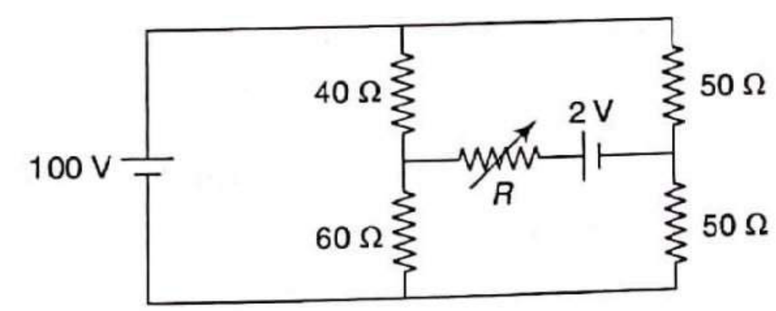

Fig. 1.431

[*Ans.* 0.327 W]

51. For the circuit shown in Fig. 1.432, determine the ammeter reading. (Assumption: internal resistance of ammeter is zero)

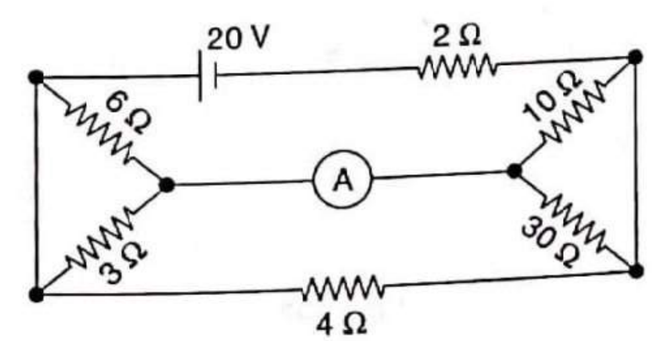

Fig. 1.432

[*Ans.* 1.23 A]

52. For the circuit shown in Fig. 1.433, calculate the effective resistance across the source.

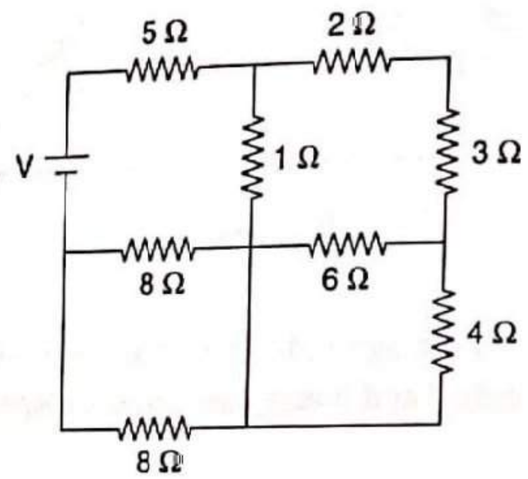

Fig. 1.433

[*Ans.* 9.88 Ω]

53. Find the value of current source and voltage across the current source. Also find the power dissipated in 2 Ω resistor.

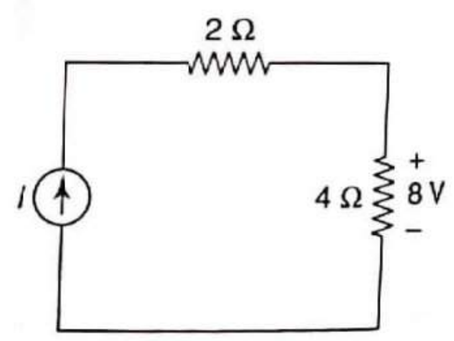

Fig. 1.434

[*Ans.* 2 A, 12 V, 8 W]

54. When the resistance of 60 Ω is connected to a battery, the terminal voltage across the battery is 98.4 V. When the resistance of 90 Ω is connected, the terminal voltage is 98.9 V. Find the emf and internal resistance of the battery. What resistance must be connected across its terminal to get a terminal voltage of 90 V ?

[*Ans.* 99.9 V, 0.92 Ω, 8.36 Ω]

55. Find V_{12}, V_{23}, V_{34} in Fig. 1.435.

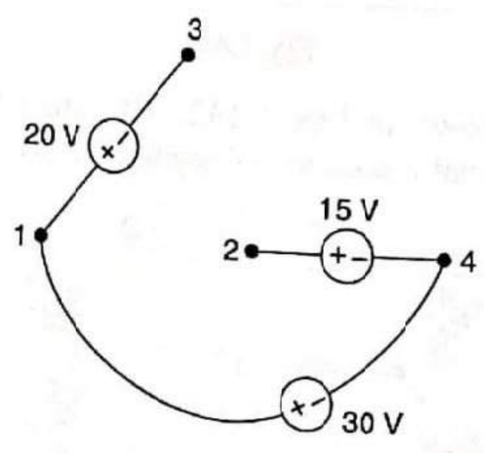

Fig. 1.435

[*Ans.* 15 V, 5 V, 10 V]

56. Find the current in all the branches of the circuit shown in Fig. 1.436.

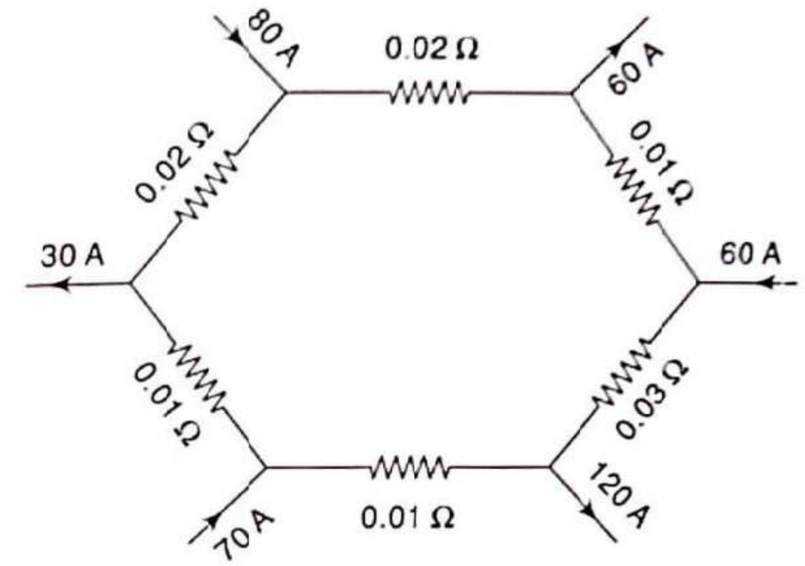

Fig. 1.436

[*Ans.* 39 A, 21 A, 39 A, 81 A, 11 A, 41 A]

57. By source transformation, find current I in the network given in Fig. 1.437.

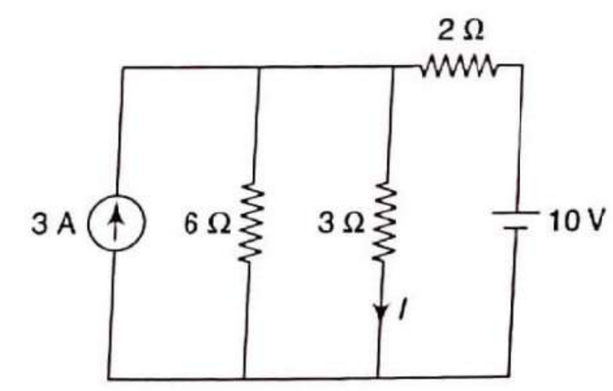

Fig. 1.437

[*Ans.* 2.67 A]

58. Using superposition principle, find current I in the circuit given in Fig. 1.438.

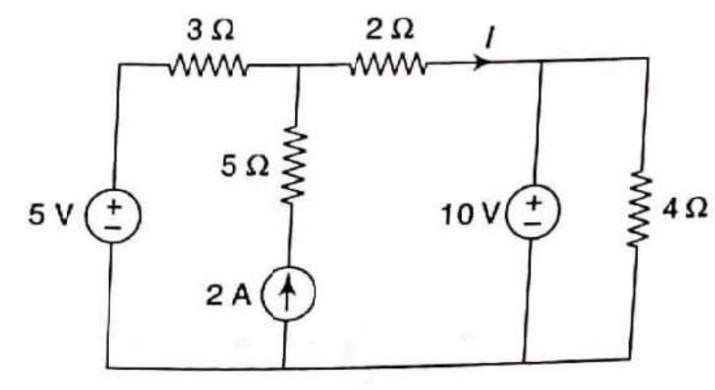

Fig. 1.438

[*Ans.* 0.2 A]

59. Using superposition theorem, find the potential difference across 3 Ω in the network given in Fig.1.439.

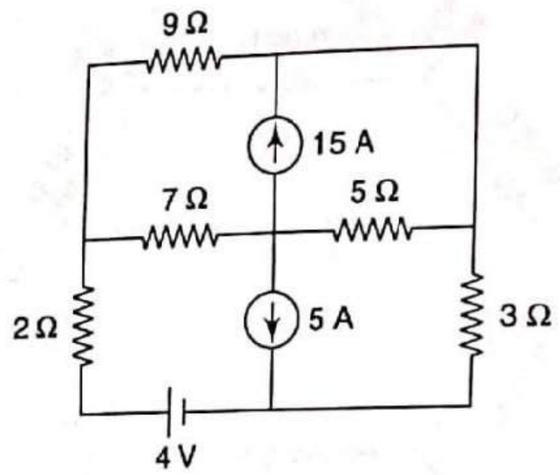

Fig. 1.439

[*Ans* 3.3 V]

60. For the given circuit in Fig. 1.440, find the current through 5 Ω resistance by using Thevenin's theorem.

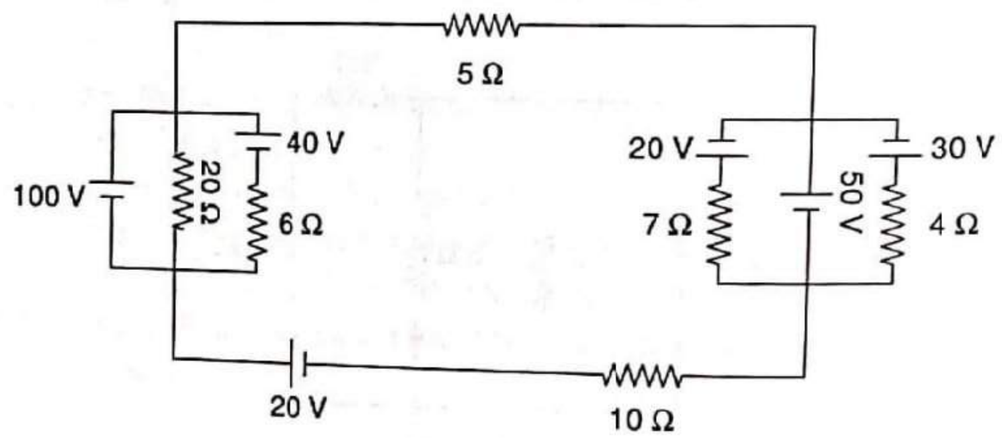

Fig. 1.440

[*Ans.* 4.67 A]

61. For the given circuit in Fig.1.441, determine voltage across 3 Ω resistance by using Thevenin's theorem and verify with superposition theorem.

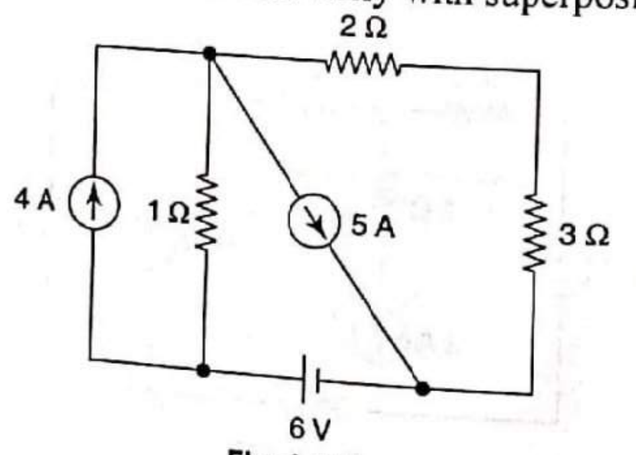

Fig. 1.441

[*Ans.* 2.5 V]

62. By direct application of Norton's theorem, find the Norton's equivalent circuit as seen by R_L in the circuit of Fig. 1.442.

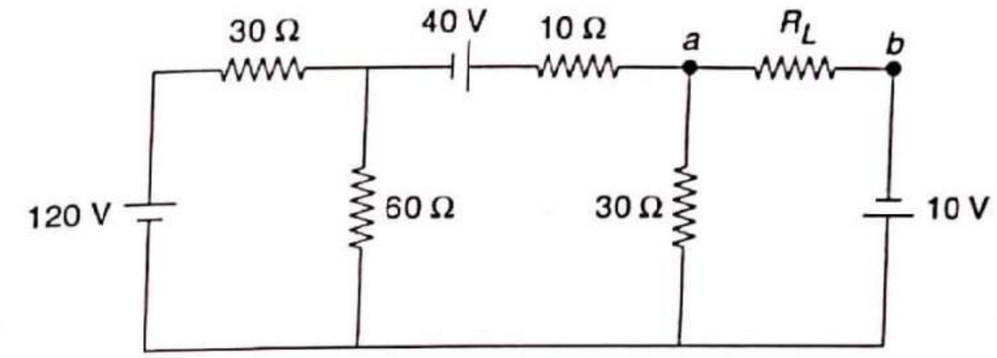

Fig. 1.442

[*Ans.* $I_N = 4.667$A, $R_N = 15$ Ω]

63. For the circuit shown in Fig. 1.443, find the Thevenin's equivalent circuit as seen by the 20 Ω resistor appearing between points *a* and *b*.

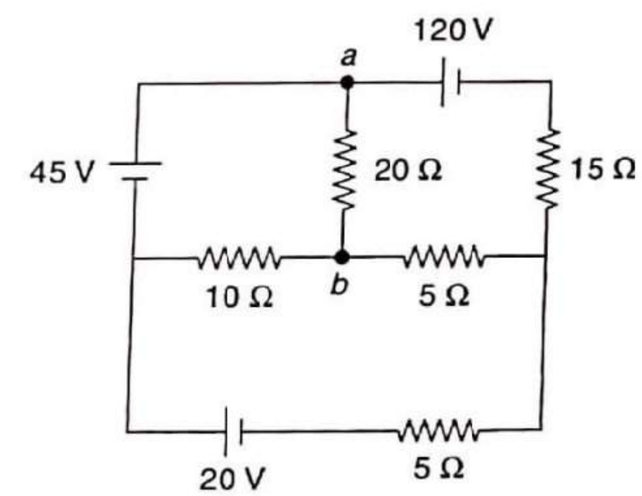

Fig. 1.443

[*Ans.* $V_{TH} = 63$ V $R_{TH} = 4.667$ Ω]

64. Find the voltage at point *A* relative to ground in the network shown in Fig. 1.444, if $R_1 = R_2 = R_3 = R_4 = R_5 = R_6 = 1$ Ω.

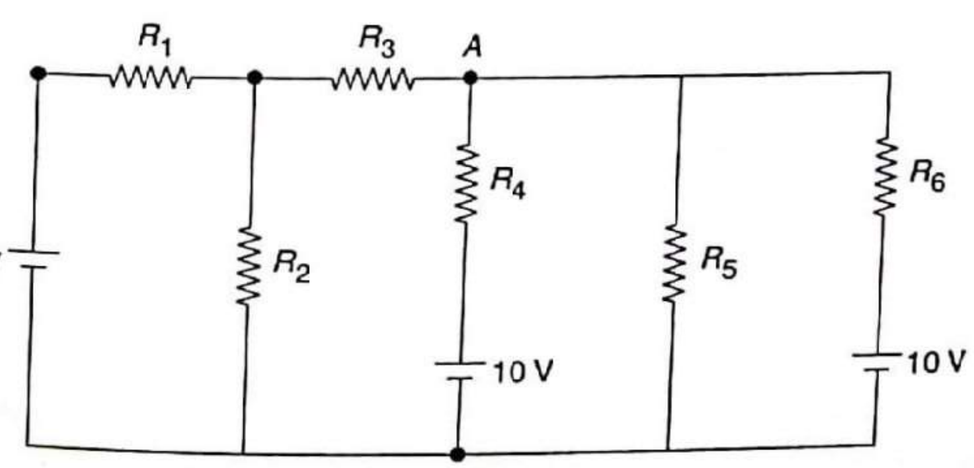

Fig. 1.444

[*Ans.* $V_A = 0.091$ V]

65. Find the current through R_L by Thevenin's theorem in the network shown in Fig. 1.445.

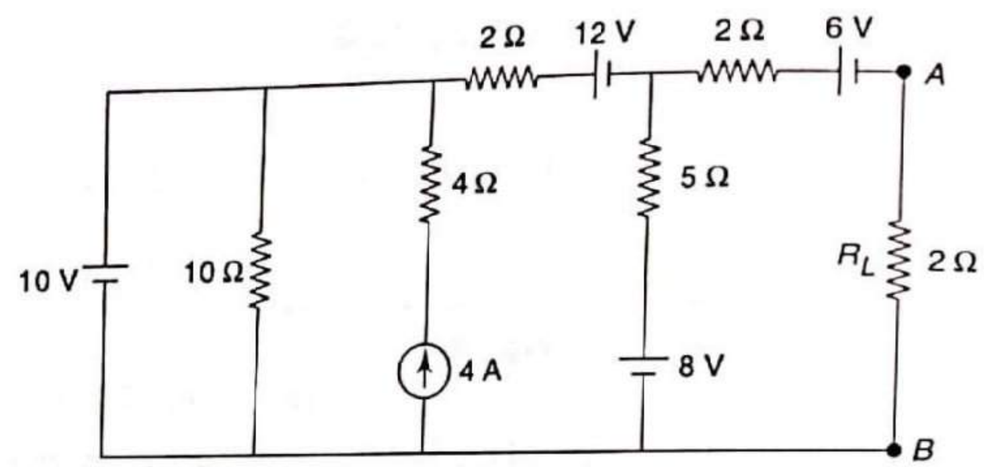

Fig. 1.445

[*Ans.* 0.1578 A]

2

AC Circuits

2.1 AC Fundamentals

In the earlier chapter, we have dealt with direct currents, which flow continuosly in one direction only. If the applied voltage and the circuit resistance are kept constant, the magnitude of the current flowing through this circuit remains constant over time. When the current flowing in the circuit varies in magnitude as well as direction periodically, it is called **alternating current**. Thus, an alternating current or voltage is one that periodically passes through a definite cycle, consisting of two half cycles—during one of which the current or voltage varies in one direction and during the other half cycle varies in the opposite direction. The circuits in which alternating currents flow are called **ac circuits.**

The graphical representations of both dc and ac are shown in Figs 2.1(a) and (b). In order to produce an ac through an electric circuit, a source capable of reversing the emf periodically is required, e.g., an ac generator. On the other hand, to produce a dc, a source capable of developing a constant emf is necessary, e.g., a battery and a dc generator.

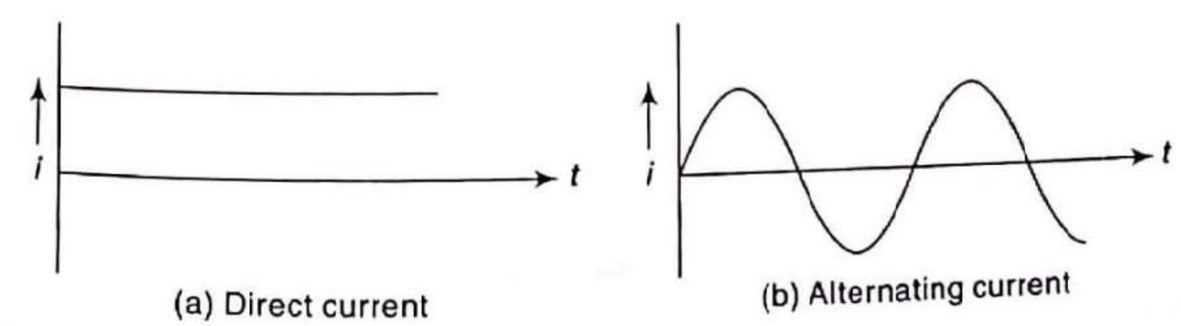

Fig. 2.1 Waveforms of dc and ac

Advantages of ac

1. The voltages in this system can be raised or lowered with the help of a transformer.
2. High-voltage ac transmission is possible and economical through the use of transformers.

3. AC motors are simple, cheap and require less attention from maintenance point of view.
4. An ac supply can be easily converted into a dc supply. This is required as dc is very much essential for the applications such as battery charging, printing process, cranes, and telephone systems.

Due to these advantages, ac is used extensively in practice.

2.1.1 Alternating Voltage and Current

A voltage that changes its polarity at regular intervals of time is called an **alternating voltage**. When an alternating voltage is applied, an alternating current is produced in the circuit. Figure 2.2 shows an alternating voltage source (ac generator) connected to a resistor R. In Fig. 2.2(a), the upper terminal of alternating voltage source is positive and the lower terminal is negative so that the current flows from positive to negative terminal. After some time (a fraction of second), the polarities of the voltage source are reversed [see Fig. 2.2(b)] so that the current now flows in the opposite direction. It is called an ac because the current changes its direction periodically in the circuit.

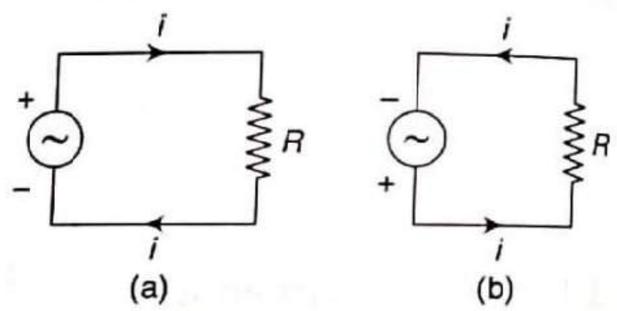

Fig. 2.2 AC circuit

The graph showing the manner in which an alternating voltage or current changes with time is known as its **waveform**. Generally, the instantaneous values of the alternating quantity are taken along y-axis and time along x-axis.

There can be several waveforms of alternating voltages and currents, e.g., triangular waveform and rectangular waveforms [Figs 2.3(a) and (b)]. But in electrical engineering, we use sinusoidal alternating voltages and currents.

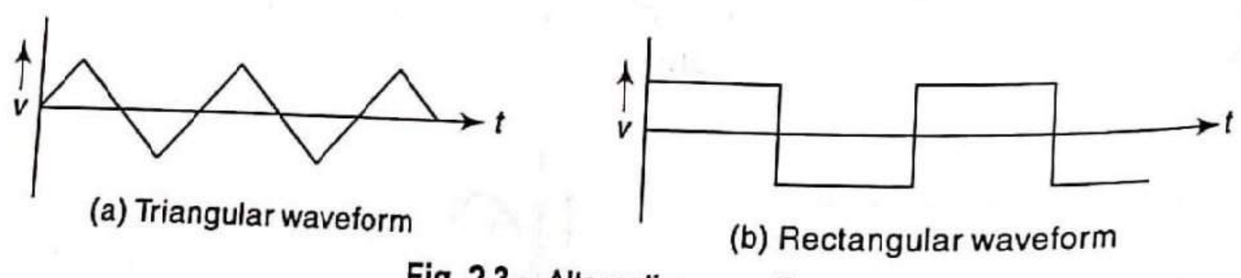

Fig. 2.3 Alternating quantity

2.1.2 Sinusoidal Alternating Voltage and Current

A sinusoidal alternating quantity is one whose instantaneous value varies according to the sine function of time, i.e., it produces a sine wave. A sinusoidal alternating voltage can be produced by rotating a coil (winding) with a constant angular velocity (say ω rad/sec) in a uniform magnetic field. Figures 2.4(a) and (b) show the waveforms of sinusoidal alternating voltage and current respectively.

The sinusoidal alternating voltage shown in Fig. 2.4(a) can be expressed mathematically as:

$$v = V_m \sin\omega t$$

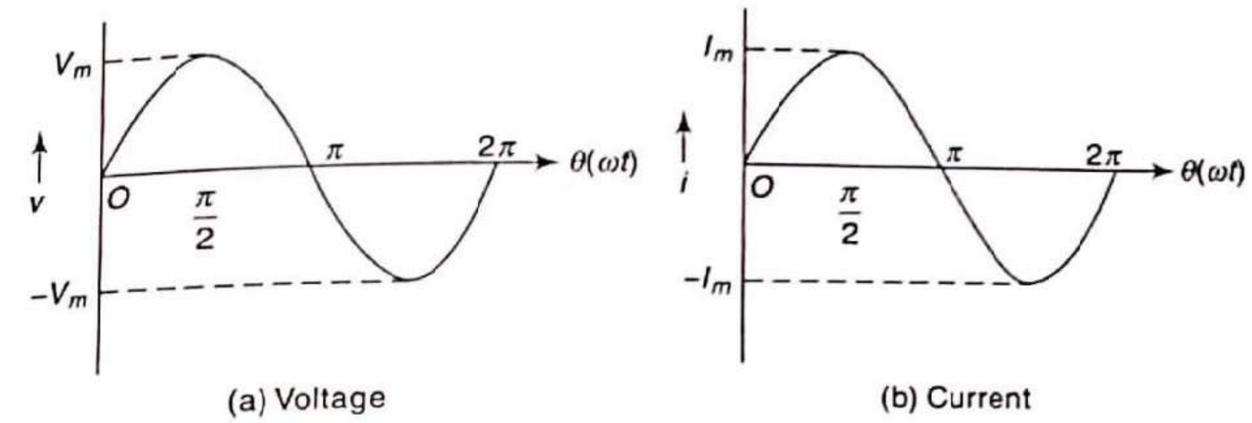

Fig. 2.4 Sinusoidal alternating quantity

where v = Instantaneous value of alternating voltage
V_m = Maximum value of alternating voltage
ω = Angular velocity of coil (winding)

It may be noted that in the above equation of sinusoidal alternating voltage, V_m and ω are constant. Therefore, the instantaneous value v (i.e., value at any instant) changes with time according to the sine function. Similarly, an alternating current varying sinusoidally can be expressed as

$$i = I_m \sin \omega t$$

Out of all these types of alternating waveforms, a sinusoidal alternating waveform is preferred for ac system.

2.1.3 Generation of Alternating Voltage

The sinusoidal alternating voltage can be generated by rotating a coil (winding) in a magnetic field or by rotating a magnetic field in a stationary coil (winding). The machine which is used to generate a sinusoidal alternating voltage is called an **ac generator**.

Figure 2.5 shows the elementary simple ac generator. It consists of a permanent magnet of two poles. A single rectangular coil which is placed in the vicinity of the permanent magnet. The coil has two conductors AB and CD connected at one end to form a coil. The coil is so placed that it can be rotated about its own axis in clockwise or anticlockwise direction. 'P' and 'Q' are the two ends of the coil.

When the coil is rotated in anticlockwise direction with constant angular velocity (by means of prime mover) in a uniform magnetic field, its conductors AB and CD cut the magnetic lines of flux and according to Faraday's laws of electromagnetic induction, an emf gets induced in them (see Section C.5.1, Appendix C).

Let

ω = Angular velocity of coil in rad/sec
l = Active length of each conductor
B = Flux density of the magnetic field
V = Linear velocity of coil conductors
θ = Angle between plane of the coil and x-axis

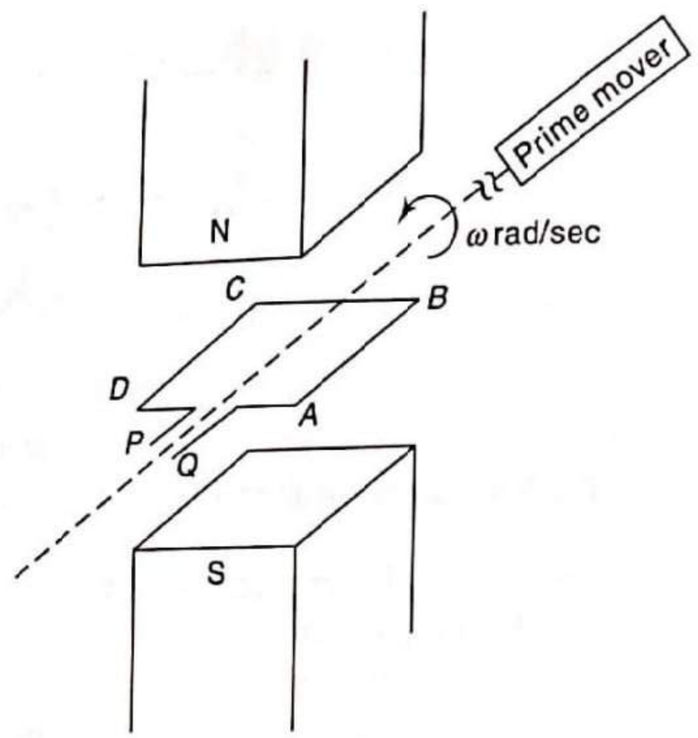

Fig. 2.5 Simple ac generator

According to Faraday's laws of electromagnetic induction,

The emf induced in one conductor = $BlV\sin\theta$

In a coil, two conductors are identical and emf's induced in them are additive. So, the induced emf in a coil,

$$v = 2\,BlV\sin\theta \tag{2.1}$$

When $\theta = 90°$, induced emf is maximum (maximum value of induced emf is expressed by V_m).

So, $V_m = 2\,BlV\sin 90°$

or $V_m = 2\,BlV$

Equation (2.1) now becomes

$$v = V_m\sin\theta \tag{2.2}$$

Thus, Eq. (2.2) gives the instantaneous value of the voltage induced in a coil.

Note: In the above equation, θ is the angle between motion of the conductor and direction of the magnetic field. As motion of the conductor is always perpendicular to the plane of the coil and the direction of the magnetic field is perpendicular to x-axis (see Fig. 2.5), at any instant the angle θ is same between plane of the coil and the x-axis.

From Eq. (2.2), it is clear that the instantaneous value of the induced voltage in a coil depends on 'θ'. As the coil continuously rotates with constant angular velocity (i.e., θ continuously varies from 0° to 360°), the magnitude of induced emf in a coil (v) continuously varies.

Let us consider different positions of the coil. When the initial position of the coil is as shown in Fig. 2.5, i.e., the plane of the coil coincides with the x-axis, $\theta = 0°$. Hence, from Eq. (2.2), no emf is generated in the coil. Thus, when $\theta = 0$, $v = 0$.

When the coil is rotated in anticlockwise direction, the angle θ increases. As coil completes its one rotation, θ varies from 0° to 360°. Taking different instants, i.e., positions of the coil, the induced emf in the coil can be calculated as follows:

When $\theta = 0°$, $v = 0$ volt

$\theta = 45°$, $v = 0.707\,V_m$ volt

$\theta = 90°$, $v = V_m$ volt

$\theta = 180°$, $v = 0$ volt

$\theta = 270°$, $v = -V_m$ volt

$\theta = 360°$, $v = 0$ volt

By plotting the above different instantaneous values of voltages against the positions of the coil (i.e., angle θ), we get Fig. 2.6.

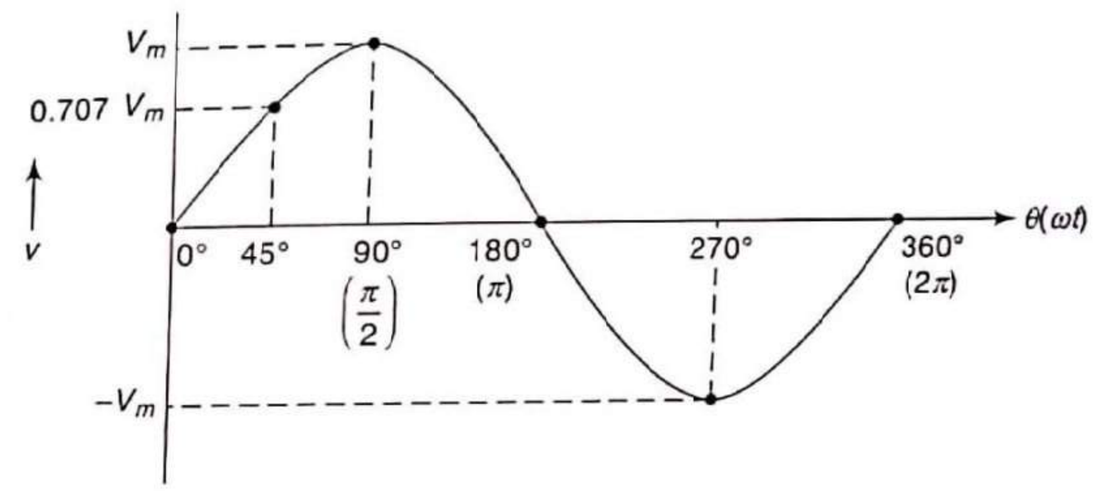

Fig. 2.6 Sinusoidal alternating voltage

From Fig. 2.6, it is clear that the waveform generated by the instantaneous values of the induced emf in a coil is purely sinusoidal in nature. Thus, sinusoidal alternating voltage can be generated by rotating a coil with constant angular velocity in a uniform magnetic field. As coil completes its one rotation, one cycle of alternating voltage is generated.

2.1.4 AC Terminology

Before further analysis of alternating quantity, it is necessary to be familiar with the different terms which are very frequently used related to the alternating quantities.

Instantaneous value (v) The value of the alternating quantity at a particular instant of time is known as its instantaneous value, e.g., v_1 and v_2 are the instantaneous values of alternating voltages at the instants t_1 and t_2 respectively shown in Fig. 2.7.

Cycle One complete set of positive and negative values of an alternating quantity is known as cycle. A cycle can be defined as each repetition of a set of positive and negative instantaneous values of an alternating quantity. One such cycle of an alternating quantity is shown in Fig. 2.7.

Time period (T) The time taken by an alternating quantity to complete its one cycle is known as its time period. It is denoted by T.

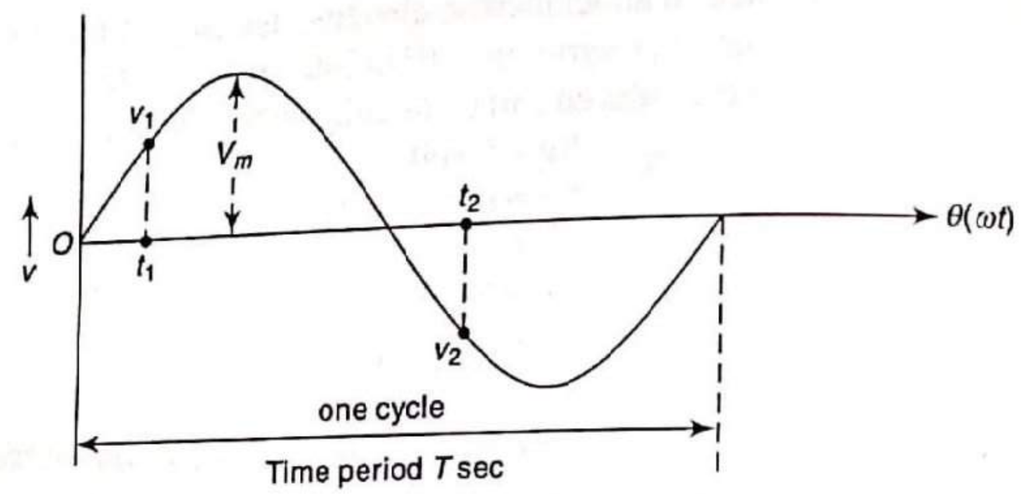

Fig. 2.7 One cycle of sinusoidal alternating voltage

Frequency (f) The number of cycles completed by an alternating quantity per second is known as its frequency. It is denoted by f and it is measured in cycles/second, also known as hertz (Hz).

As time period T is the time for one cycle, i.e., seconds/cycle and frequency is cycles/second, we can say that the frequency is reciprocal of the time period.

$$f = \frac{1}{T} \text{Hz}$$

Amplitude (V_m) The maximum value attained by an alternating quantity during positive or negative half cycle is called its amplitude. It is denoted by V_m.

2.1.5 Standard Forms of Alternating Quantity

In an ac generator, if the coil is rotated with constant angular velocity ω rad/sec, the angle turned by the coil is given by

Angle turned, $\theta = \omega t$ rad

In one revolution of coil, the angle turned is 2π radian and the voltage wave completes one cycle. The time taken to complete one cycle is the time period T of the alternating voltage.

So, $$\text{Angular velocity } \omega = \frac{\text{Angle turned}}{\text{Time taken}} = \frac{2\pi}{T}$$

or $$\omega = 2\pi f \qquad \left(\because f = \frac{1}{T}\right)$$

The standard forms of a sinusoidal alternating voltage are given by

$$v = V_m \sin\theta$$
$$v = V_m \sin\omega t \qquad (\because \theta = \omega t)$$
$$v = V_m \sin 2\pi f t \qquad (\because \omega = 2\pi f)$$
$$v = V_m \sin \frac{2\pi}{T} t \qquad \left(\because f = \frac{1}{T}\right)$$

Similarly, the standard forms of a sinusoidal alternating current are given by

$$i = I_m \sin\theta$$
$$i = I_m \sin\omega t \qquad (\because \theta = \omega t)$$
$$i = I_m \sin 2\pi f t \qquad (\because \omega = 2\pi f)$$
$$i = I_m \sin \frac{2\pi}{T} t \qquad \left(\because f = \frac{1}{T}\right)$$

Example 2.1 An alternating current i is given by $i = 141.4 \sin 314t$. Find (i) the maximum value, (ii) the frequency, (iii) the time period, and (iv) the instantaneous value when time is 3 msec.

Solution

Comparing the given equation of alternating current with the standard form $i = I_m \sin \omega t$, we have

(i) Maximum value, $I_m = 141.4$ A

(ii) Frequency, $f = \frac{\omega}{2\pi} = \frac{314}{2\pi} = 50$ Hz

(iii) Time period, $T = \frac{1}{f} = \frac{1}{50} = 0.02$ sec

(iv) Given $i = 141.4 \sin 314t$

When $t = 3$ msec $= 3 \times 10^{-3}$ sec, we get

$$i = 141.4 \sin(314 \times 3 \times 10^{-3}) = 141.4 \sin\left[(314 \times 3 \times 10^{-3}) \times \frac{180}{\pi}\right]^\circ$$

So, $i = 114.36$ A

Example 2.2 An alternating current of frequency 60 Hz has a maximum value of 12A. (i) Write down the equation of the instantaneous value, (ii) find the value of current after $\frac{1}{360}$ sec, and (iii) find the time taken to reach 9.6 A for the first time.

Solution

(i) $i = I_m \sin \omega t = 12 \sin 2\pi \times 60t = 12 \sin 377t$

(ii) Value of current after $\frac{1}{360}$ sec,

$$i = 12 \sin 377t$$

or $$i = 12 \sin 377 \left(\frac{1}{360}\right)$$

or $$i = 12 \sin 1.047$$

or $$i = 12 \sin\left(1.047 \times \frac{180}{\pi}\right)^\circ$$

or $i = 12 \sin 60°$

Hence, $i = 10.39$ A

(iii) Time taken to reach 9.6 A for the first time is given by

$$i = I_m \sin 377t$$

or $9.6 = 12 \sin 377t$

or $\sin 377t = 0.8$

or $\sin\left(377t \times \frac{180}{\pi}\right)^{\circ} = 0.8$

or $377t \times \frac{180}{\pi} = \sin^{-1} 0.8$

or $377t \times \frac{180}{\pi} = 53.13$

Hence, $t = 2.46 \times 10^{-3}$ sec

Example 2.3 An alternating voltage is given by $v = 10 \sin 942t$. Determine the time taken from $t = 0$ for the voltage to reach a value of +6V for first and second time.

Solution

Figure 2.8 shows the waveform of the given alternating voltage. Let the voltage become +6V for the first time after t sec. Then

as $v = V_m \sin \omega t$,

$v = 10 \sin 942t$

So, $6 = 10 \sin 942t$

or $\sin 942t = 0.6$

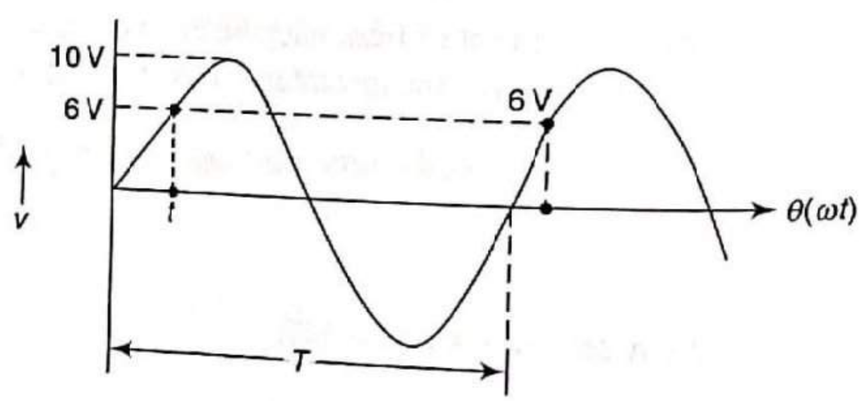

Fig. 2.8

In the above expression, the angle '942t' is in radians.

So, $\sin\left(942t \times \frac{180}{\pi}\right)^{\circ} = 0.6$

or $942t \times \frac{180}{\pi} = \sin^{-1} 0.6$

or $942t \times \frac{180}{\pi} = 36.87$

or $t = 0.68 \times 10^{-3}$ sec

The frequency of the voltage is $f = \frac{942}{2\pi} = 150$ Hz and the time period of the wave is $T = \frac{1}{150} = 6.66 \times 10^{-3}$ sec.

So, the time taken to reach 6V for the second time $= 0.68 \times 10^{-3}$ + time period

$= 0.68 \times 10^{-3} + 6.66 \times 10^{-3}$

$= 7.34$ msec

2.1.6 Values of Alternating Voltage and Current

In a dc system, the voltage and current are constant so that there is no problem of specifying their magnitudes. However, an alternating voltage or current varies from instant to instant. The magnitude of an alternating voltage or current is expressed by three ways, namely

1. peak value
2. average value
3. rms value or effective value

1. Peak value

It is the maximum value attained by an alternating quantity. The peak or maximum value of alternating voltage or current is represented by V_m or I_m.

2. Average value

The arithmetical average of all the values of an alternating quantity over one cycle is called its average value, i.e.,

$$\text{Average value} = \frac{\text{Area under the curve}}{\text{Base}}$$

The waveforms can be classified into two types: symmetrical waveform and unsymmetrical waveform. A symmetrical waveform has positive half cycle exactly equal to the negative half cycle. If positive half cycle is not equal to the negative half cycle, then the waveform is said to be unsymmetrical.

In case of symmetrical waveforms (e.g., sinusoidal voltage or current), the average value over one cycle is zero. It is because the positive half is exactly equal to the negative half so that the net area is zero. However, the average value of positive or negative half is not zero. Hence, in case of symmetrical waveforms, average value means the average value of half cycle or one alternation. In case of unsymmetrical waveform, average value is taken over full cycle.

Thus, for symmetrical waveforms (+ve half = –ve half),

$$\text{Average value} = \frac{\text{Area of half cycle}}{\text{Base length of half cycle}}$$

Similarly, for unsymmetrical waveforms (+ve half ≠ –ve half),

$$\text{Average value} = \frac{\text{Area of full cycle}}{\text{Base length of full cycle}}$$

Average value of sinusoidal ac

The equation of sinusoidal ac is given by

$$i = I_m \sin\theta$$

Figure 2.9 shows the waveform of sinusoidal ac.

As the given waveform is symmetrical,

$$\text{Average value} = \frac{\text{Area of half cycle}}{\text{Base length of half cycle}}$$

So,
$$I_{\text{average}} = \frac{\int_0^{\pi} i\,d\theta}{\pi}$$
$$= \frac{1}{\pi}\int_0^{\pi} I_m \sin\theta\, d\theta$$
$$= \frac{I_m}{\pi}[-\cos\theta]_0^{\pi}$$
$$= \frac{I_m}{\pi}[-\cos\pi - (-\cos 0)]$$
$$= \frac{I_m}{\pi}[-(-1)-(-1)]$$
$$= \frac{2I_m}{\pi}$$

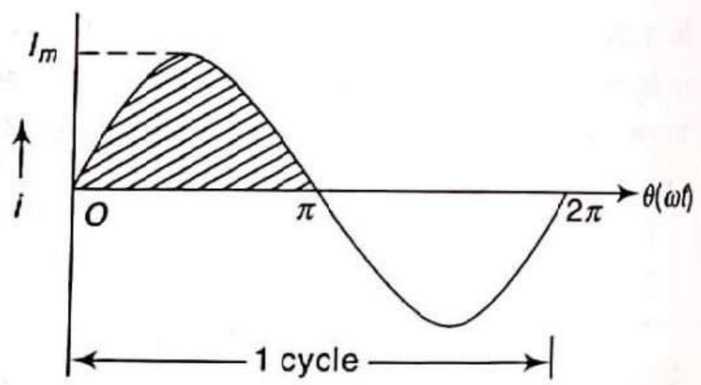

Fig. 2.9

or $I_{\text{average}} = 0.637\, I_m$

Similarly, it can be proved that for sinusoidal alternating voltage,

$$V_{\text{average}} = 0.637\, V_m$$

Example 2.4 Find the average value of the waveform shown in Fig. 2.10.

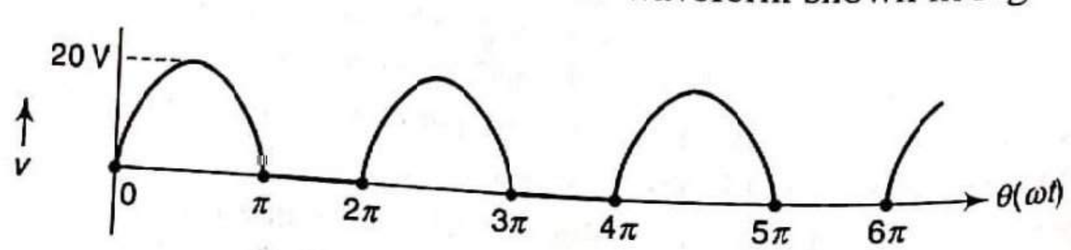

Fig. 2.10

Solution

Consider a full cycle of the given waveform. (Each repetition of a set of positive and negative values of a quantity is known as cycle.)

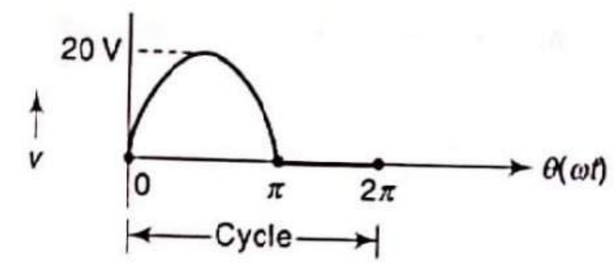

In a cycle, as positive half is not equal to the negative half, the waveform is unsymmetrical. So, we have to consider a full cycle for average value.

Now, mathematical equation of a cycle is required. It is not possible to write the single equation of a waveform. The given voltage waveform can be divided into two intervals.

First interval is $0 < \theta < \pi$, where the voltage is sinusoidal. Therefore, equation of the voltage is $v = 20 \sin\theta$.

Second interval is $\pi < \theta < 2\pi$, where the voltage remains zero. Therefore, equation of the voltage is $v = 0$.

Thus,

Interval	Equation
$0 < \theta < \pi$	$v = 20 \sin\theta$
$\pi < \theta < 2\pi$	$v = 0$

So,
$$V_{\text{average}} = \frac{\text{Area of full cycle}}{\text{Base length of full cycle}}$$

or
$$V_{\text{average}} = \frac{\int_0^{2\pi} v\,d\theta}{2\pi}$$

or
$$V_{\text{average}} = \frac{1}{2\pi}\left\{\int_0^{\pi} v\,d\theta + \int_{\pi}^{2\pi} v\,d\theta\right\}$$
$$= \frac{1}{2\pi}\int_0^{\pi} 20\sin\theta\, d\theta$$
$$= \frac{20}{2\pi}\int_0^{\pi} \sin\theta\, d\theta$$
$$= \frac{20}{2\pi}[-\cos\theta]_0^{\pi}$$
$$= \frac{20}{2\pi}[-\cos\pi - (-\cos 0)]$$
$$= \frac{20}{2\pi}[2]$$
$$= 6.366 \text{ V}$$

Example 2.5 Find the average value of the waveform shown in Fig. 2.11.

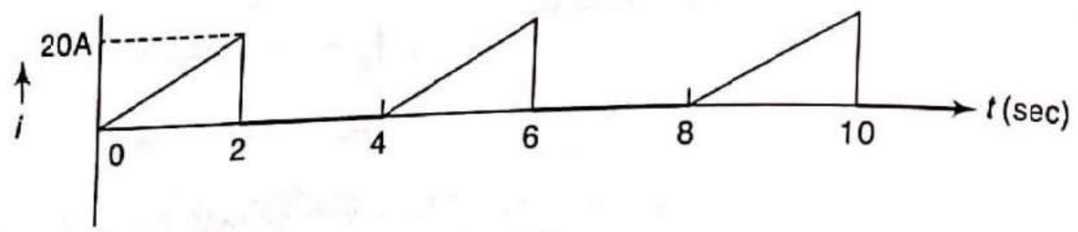

Fig. 2.11

Solution

Consider one cycle of a given waveform.

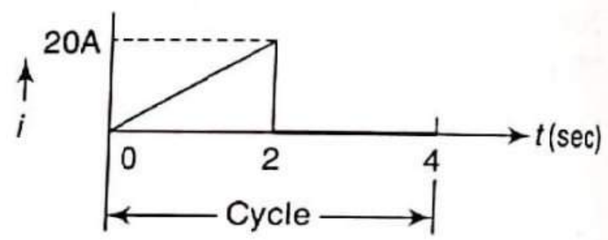

As positive half is not equal to negative half, given waveform is unsymmetrical. Therefore, for average value, we have to consider a full cycle.

In interval $0 < t < 2$, current increases with constant slope of 10 A/sec. Therefore, the equation of current is $i = 10t$.

In interval $2 < t < 4$, current remains zero. Therefore, the equation of current is $i = 0$.

Thus,

Interval	Equation
$0 < t < 2$	$i = 10t$
$2 < t < 4$	$i = 0$

So, $$I_{average} = \frac{\int_0^4 i\,dt}{4}$$

$$= \frac{1}{4}\left\{\int_0^2 i\,dt + \int_2^4 i\,dt\right\}$$

$$= \frac{1}{4}\int_0^2 10t\,dt + 0$$

$$= \frac{10}{4}\left[\frac{t^2}{2}\right]_0^2$$

$$= \frac{10}{4}\left[\frac{(2)^2}{2} - \frac{(0)^2}{2}\right]$$

$$= 5\text{ A}$$

Example 2.6 Find the average value of the waveform shown in Fig. 2.12.

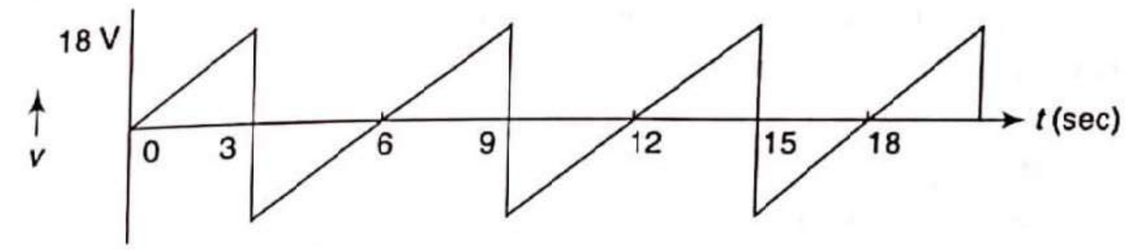

Fig. 2.12

Solution

Consider one cycle of the given waveform. As positive half is exactly equal to negative half, the given waveform is symmetrical. Therefore, for average value, we have to consider a half cycle, i.e., duration of 3 sec ($0 < t < 3$).

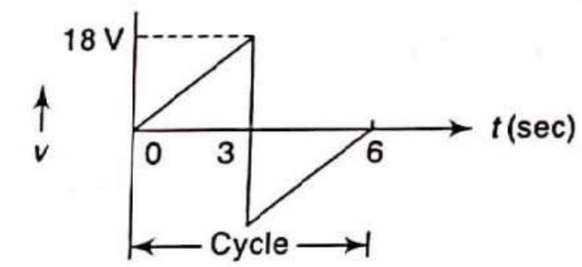

In interval $0 < t < 3$, voltage increases with constant slope of 6 V/sec. Therefore, the equation of voltage is $v = 6t$.

So, $$V_{average} = \frac{\int_0^3 v\,dt}{3}$$

$$= \frac{1}{3}\int_0^3 6t\,dt$$

$$= \frac{6}{3}\left[\frac{t^2}{2}\right]_0^3$$

$$= \frac{6}{3}\left[\frac{(3)^2}{2} - \frac{(0)^2}{2}\right]$$

$$= 9\text{ V}$$

Example 2.7 Find the average value of the waveform shown in Fig. 2.13.

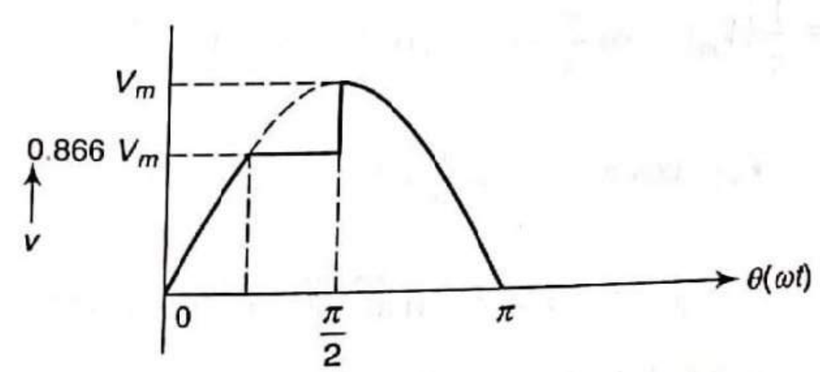

Fig. 2.13

Solution

The angle 'θ' at which the instantaneous value of the voltage becomes equal to $0.866\ V_m$ is required. The angle 'θ' can be calculated as given below.

The equation of the waveform is given by

$$v = V_m \sin\theta$$

When $v = 0.866\ V_m$, $\theta = ?$

So, $0.866\ V_m = V_m \sin\theta$

Hence, $\theta = \frac{\pi}{3}$ rad

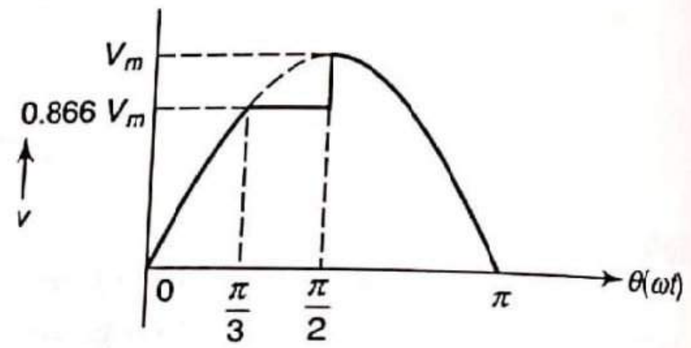

Now, the voltage waveform is given as follows:

Interval	Equation
$0 < \theta < \frac{\pi}{3}$	$v = V_m \sin\theta$
$\frac{\pi}{3} < \theta < \frac{\pi}{2}$	$v = 0.866\ V_m$
$\frac{\pi}{2} < \theta < \pi$	$v = V_m \sin\theta$

So, $$V_{\text{average}} = \frac{\int_0^{\pi} v\, d\theta}{\pi}$$

$$= \frac{1}{\pi}\left\{\int_0^{\pi/3} v\, d\theta + \int_{\pi/3}^{\pi/2} v\, d\theta + \int_{\pi/2}^{\pi} v\, d\theta\right\}$$

$$= \frac{1}{\pi}\left\{\int_0^{\pi/3} V_m \sin\theta\, d\theta + \int_{\pi/3}^{\pi/2} 0.866\, V_m\, d\theta + \int_{\pi/2}^{\pi} V_m \sin\theta\, d\theta\right\}$$

$$= \frac{1}{\pi}\left\{V_m[-\cos\theta]_0^{\pi/3} + 0.866\, V_m[\theta]_{\pi/3}^{\pi/2} + V_m[-\cos\theta]_{\pi/2}^{\pi}\right\}$$

$$= \frac{1}{\pi}\left\{V_m\left[-\cos\frac{\pi}{3} - (-\cos 0)\right] + 0.866\, V_m\left[\frac{\pi}{2} - \frac{\pi}{3}\right] + V_m\left[-\cos\pi - \left(-\cos\frac{\pi}{2}\right)\right]\right\}$$

$$= \frac{1}{\pi}\{V_m[-0.5 - (-1)] + 0.866\ V_m[1.57 - 1.047] + V_m[-(-1) - (-0)]\}$$

$$= \frac{1}{\pi}\{0.5\ V_m + 0.45\ V_m + V_m\}$$

$$= 0.621\ V_m$$

Example 2.8 Find the average value of the waveform shown in Fig. 2.14.

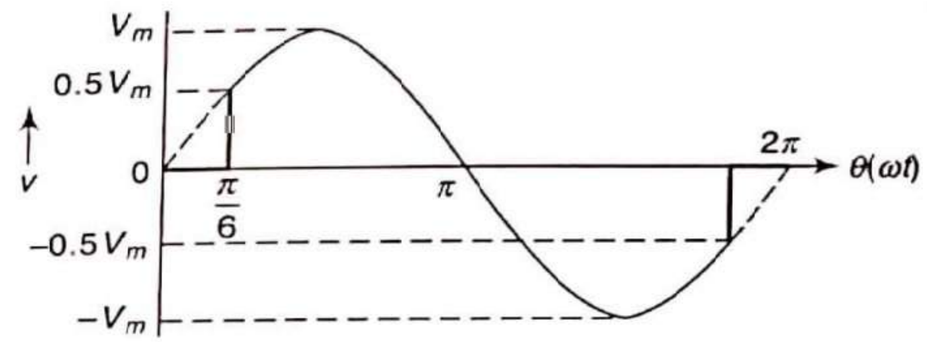

Fig. 2.14

Solution

As the given waveform is symmetrical, for average value we have to consider a half cycle.

So, $$V_{\text{average}} = \frac{\int_0^{\pi} v\, d\theta}{\pi}$$

$$= \frac{1}{\pi}\left\{\int_0^{\pi/6} v\, d\theta + \int_{\pi/6}^{\pi} v\, d\theta\right\}$$

$$= \frac{1}{\pi}\left\{\int_0^{\pi/6} 0\, d\theta + \int_{\pi/6}^{\pi} V_m \sin\theta\, d\theta\right\}$$

$$= \frac{V_m}{\pi}\int_{\pi/6}^{\pi} \sin\theta\, d\theta$$

$$= \frac{V_m}{\pi}[-\cos\theta]_{\pi/6}^{\pi}$$

$$= \frac{V_m}{\pi}\left[-\cos\pi - \left(-\cos\frac{\pi}{6}\right)\right]$$

$$= \frac{V_m}{\pi}[-(-1) - (-0.866)]$$

$$= 0.594\ V_m$$

Example 2.9 Find the average value of the waveform shown in Fig. 2.15.

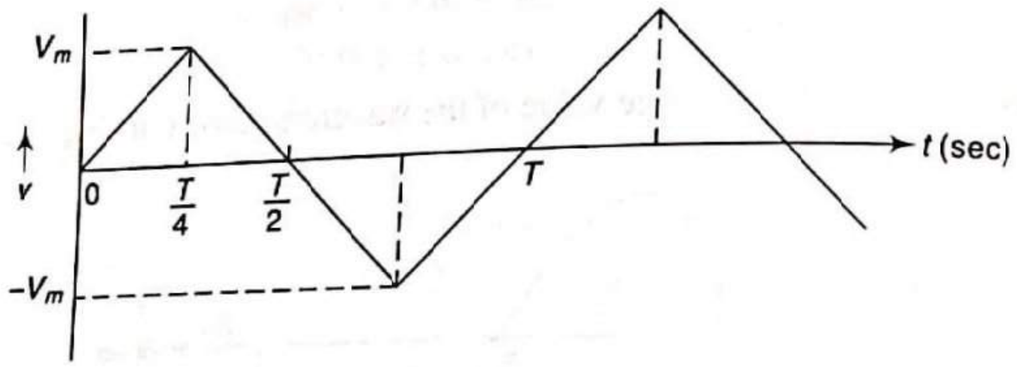

Fig. 2.15

Solution

Time period of the given waveform is T sec. As positive half cycle is equal to negative half cycle, waveform is symmetrical. Therefore, for average value, we have to consider half cycle.

For interval $0 < t < \frac{T}{4}$, the equation of voltage is $v = \frac{4V_m}{T}t$.

As shown in the above figure, the area under the curve can be divided into two parts (Part I and Part II).

Area of Part I = Area of Part II

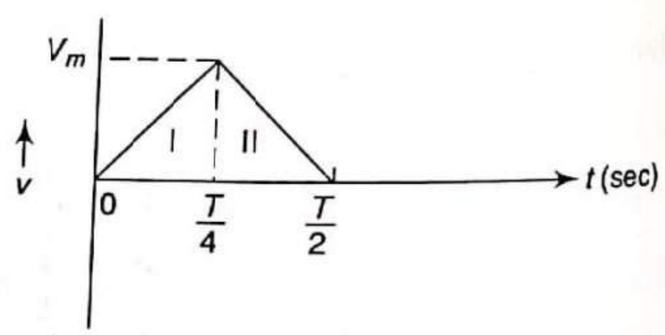

So, $$V_{average} = \frac{2\int_0^{T/4} v\,dt}{\frac{T}{2}}$$

$$= \frac{2}{T}\left[2\int_0^{T/4} \frac{4V_m}{T}t\,dt\right]$$

$$= \frac{2}{T}\times 2\times\frac{4V_m}{T}\left[\frac{t^2}{2}\right]_0^{T/4}$$

$$= \frac{2}{T}\times 2\times\frac{4V_m}{T}\left[\frac{(T)^2}{16}\cdot\frac{1}{2}-\frac{0}{2}\right]$$

$$= \frac{V_m}{2}$$

$$= 0.5\,V_m$$

3. RMS or effective value

The value of alternating current changes continuously with time, whereas the direct current remains constant with respect to time. The rms value is the criterion

to measure the effectiveness of an alternating current (or voltage). The evident choice would be to measure it in terms of direct current that would do work (or produce heat) at the same average rate under similar conditions.

In Fig. 2.16(a), direct current of I A is passed through the resistance R for some time. In Fig. 2.16(b), an alternating current is passed through the same resistance for the same time. If the same amount of heat is produced in both cases, then the rms value of alternating current is said to be equal to direct current, i.e., I A. Thus, from the above example, the rms or effective value can be stated as follows:

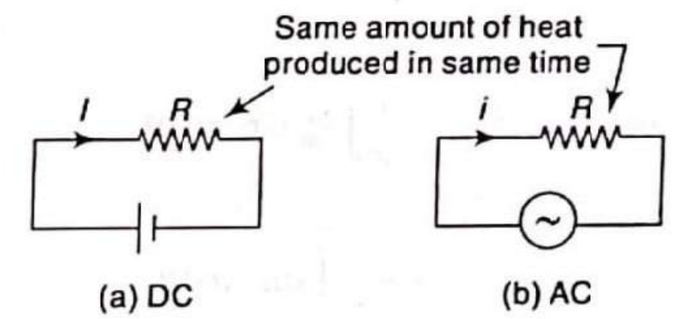

Fig. 2.16 Illustration of rms value

The effective or rms value of an alternating current is equal to that direct current which when flowing through a given resistance for a given time produces the same amount of heat as produced by the ac when flowing through the same resistance for the same time.

For symmetrical waveform, the rms or effective value can be found by considering half cycle or full cycle. However, for unsymmetrical waves, full cycle should be considered.

For symmetrical waveform (+ve half = –ve half),

$$\text{RMS value} = \sqrt{\frac{\text{Area of half/full cycle of squared wave}}{\text{Base length of half/full cycle}}}$$

For unsymmetrical waveform (+ve half ≠ –ve half),

$$\text{RMS value} = \sqrt{\frac{\text{Area of full cycle of squared wave}}{\text{Base length of full cycle}}}$$

RMS value of sinusoidal alternating current The equation of an alternating current varying sinusoidally is given by

$$i = I_m \sin\theta$$

Figure 2.17 shows the waveform of sinusoidal alternating current. The waveform of squared wave is shown by dotted line.

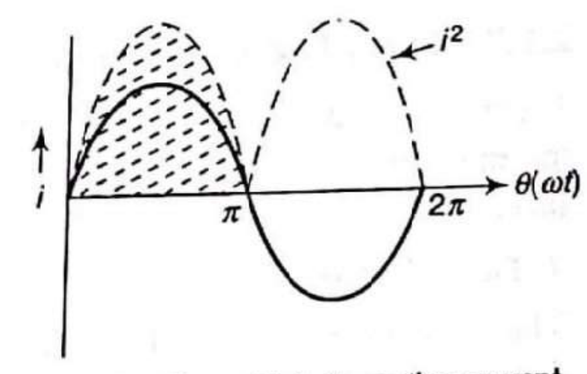

Fig. 2.17 Sinusoidal alternating current

As the given waveform is symmetrical, for rms value, we can consider half or full cycle.

So, $$\text{rms value} = \sqrt{\frac{\text{Area of half cycle of squared wave}}{\text{Base length of half cycle}}}$$

or $$I_{rms} = \sqrt{\frac{\int_0^{\pi} i^2\, d\theta}{\pi}}$$

or $$I^2_{rms} = \frac{1}{\pi}\int_0^{\pi} I_m^2 \sin^2\theta\, d\theta$$

$$= \frac{I_m^2}{\pi}\int_0^{\pi} \sin^2\theta\, d\theta$$

$$= \frac{I_m^2}{\pi}\int_0^{\pi}\left(\frac{1-\cos 2\theta}{2}\right) d\theta$$

$$= \frac{I_m^2}{2\pi}\left[\theta - \frac{\sin 2\theta}{2}\right]_0^{\pi}$$

$$= \frac{I_m^2}{2\pi}\left[\pi - \frac{\sin 2\pi}{2} - \left(0 - \frac{\sin(2\times 0)}{2}\right)\right]$$

$$= \frac{I_m^2}{2\pi}[\pi]$$

Hence, $I_{rms} = \dfrac{I_m}{\sqrt{2}} = 0.707\, I_m$

Similarly, it can be proved that for sinusoidal alternating voltage,

$$V_{rms} = \frac{V_m}{\sqrt{2}} = 0.707\, V_m$$

2.1.7 Form Factor and Peak Factor

There exists a definite relationship among the peak value, the average value, and the rms value of an alternating quantity. The relationship is expressed by two factors, namely form factor and peak factor.

1. Form factor

The ratio of rms value to the average value of an alternating quantity is known as **form factor**.

Thus, $$\text{Form factor} = \frac{\text{rms value}}{\text{Average value}}$$

The value of form factor depends upon the waveform of the alternating quantity. The form factor for an alternating voltage or current varying sinusoidally is 1.11, i.e., for a sinusoidal voltage or current,

$$\text{Form factor} = \frac{\text{rms value}}{\text{Average value}} = \frac{0.707 \times \text{Maximum value}}{0.637 \times \text{Maximum value}} = 1.11$$

The form factor gives a measure of the 'peakiness' of the waveform. The peakier the wave, the greater is its form factor and vice versa. The form factor is useful in rectifier service.

2. Peak factor

The ratio of maximum value to the rms value of an alternating quantity is known as peak factor, i.e.,

$$\text{Peak factor} = \frac{\text{Maximum value}}{\text{rms value}}$$

The value of peak factor also depends upon the waveform of the alternating quantity. The peak factor for an alternating voltage or current varying sinusoidally is 1.414, i.e., for a sinusoidal voltage or current,

$$\text{Peak factor} = \frac{\text{Maximum value}}{\text{rms value}} = \frac{\text{Maximum value}}{0.707 \times \text{Maximum value}} = 1.414$$

Knowledge of this factor is important in dieletric insulation testing because the dielectric stress to which the insulation is subjected, is proportional to the maximum or peak value of the applied voltage.

Example 2.10 Find the rms value of the waveform shown in Fig. 2.18.

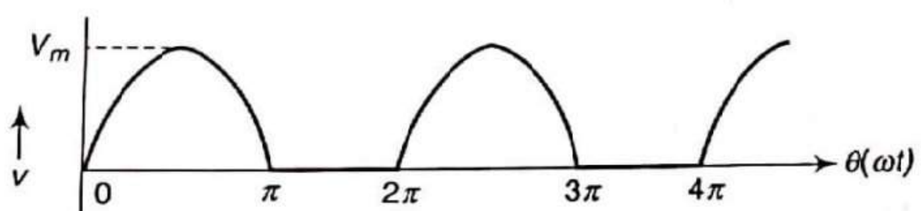

Fig. 2.18

Solution

As given waveform is unsymmetrical, for rms value, we have to consider full cycle. The equations of the voltage waveform are given by

$v = V_m \sin\theta, \quad 0 < \theta < \pi$

$v = 0, \quad \pi < \theta < 2\pi$

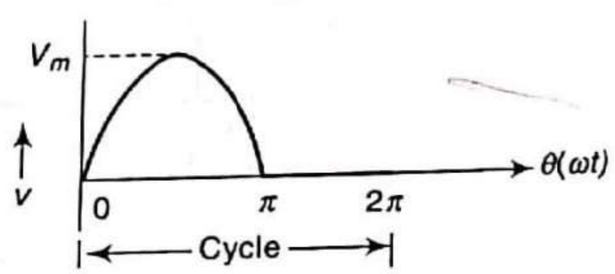

So, $$V_{rms} = \sqrt{\frac{\text{Area of full cycle of squared wave}}{\text{Base length of full cycle}}}$$

or $$V_{rms} = \sqrt{\frac{\int_0^{2\pi} v^2\, d\theta}{2\pi}}$$

or $$V_{rms}^2 = \frac{1}{2\pi}\int_0^{2\pi} v^2\, d\theta$$

$$= \frac{1}{2\pi}\left\{\int_0^{\pi} v^2\, d\theta + \int_{\pi}^{2\pi} v^2\, d\theta\right\}$$

$$= \frac{1}{2\pi}\left\{\int_0^{\pi} (V_m \sin\theta)^2\, d\theta + \int_{\pi}^{2\pi} (0)^2\, d\theta\right\}$$

$$= \frac{1}{2\pi}\int_0^{\pi} V_m^2 \sin^2\theta\, d\theta$$

$$= \frac{V_m^2}{2\pi}\int_0^{\pi}\left(\frac{1-\cos 2\theta}{2}\right) d\theta$$

$$= \frac{V_m^2}{2\pi\times 2}\left[\theta - \frac{\sin 2\theta}{2}\right]_0^{\pi}$$

$$= \frac{V_m^2}{2\pi\times 2}\left\{\pi - \frac{\sin 2\pi}{2} - \left[0 - \frac{\sin(2\times 0)}{2}\right]\right\}$$

$$= \frac{V_m^2}{2\pi\times 2}\{\pi\}$$

Hence, $V_{rms} = \frac{V_m}{2} = 0.5\, V_m$

Example 2.11 Find the rms value of the waveform shown in Fig. 2.19.

Solution

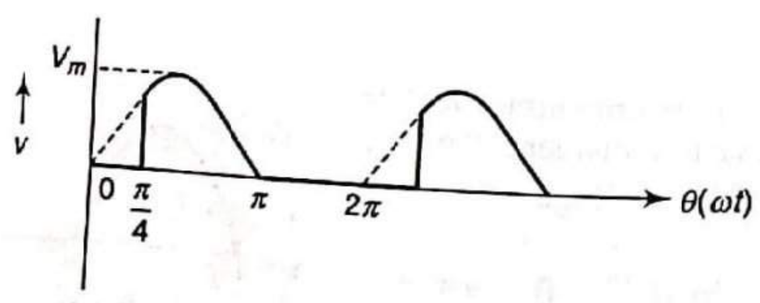

Fig. 2.19

As given waveform is unsymmetrical, for rms value we have to consider full cycle.

The equations of the voltage waveform are given as

$v = 0,\quad 0 < \theta < \frac{\pi}{4}$

$v = V_m \sin\theta,\quad \frac{\pi}{4} < \theta < \pi$

$v = 0,\quad \pi < \theta < 2\pi$

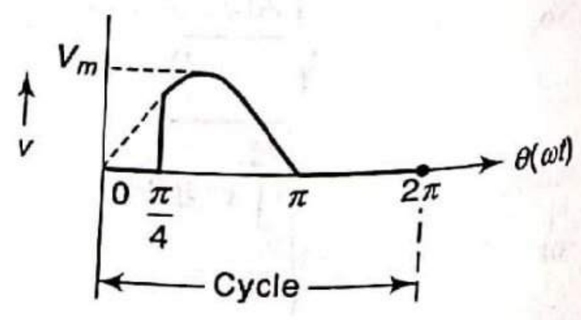

So, $$V_{rms} = \sqrt{\frac{1}{2\pi}\int_0^{2\pi} v^2\, d\theta}$$

or $$V_{rms}^2 = \frac{1}{2\pi}\left\{\int_0^{\pi/4} v^2\, d\theta + \int_{\pi/4}^{\pi} v^2\, d\theta + \int_{\pi}^{2\pi} v^2\, d\theta\right\}$$

$$= \frac{1}{2\pi}\int_{\pi/4}^{\pi} (V_m \sin\theta)^2\, d\theta$$

$$= \frac{1}{2\pi}\int_{\pi/4}^{\pi} V_m^2 \sin^2\theta\, d\theta$$

$$= \frac{V_m^2}{2\pi}\int_{\pi/4}^{\pi}\left(\frac{1-\cos 2\theta}{2}\right) d\theta$$

$$= \frac{V_m^2}{2\pi\times 2}\left\{\theta - \frac{\sin 2\theta}{2}\right\}_{\pi/4}^{\pi}$$

$$= \frac{V_m^2}{2\pi\times 2}\left\{\pi - \frac{\sin 2\pi}{2} - \left[\frac{\pi}{4} - \frac{\sin\left(2\times\frac{\pi}{4}\right)}{2}\right]\right\}$$

$$= \frac{V_m^2}{2\pi\times 2}\left\{3.14 - \frac{0}{2} - \left[0.785 - \frac{1}{2}\right]\right\}$$

$$= 0.227\, V_m^2$$

Hence, $V_{rms} = 0.476\, V_m$

Example 2.12 Find the rms value of the waveform shown in Fig. 2.20.

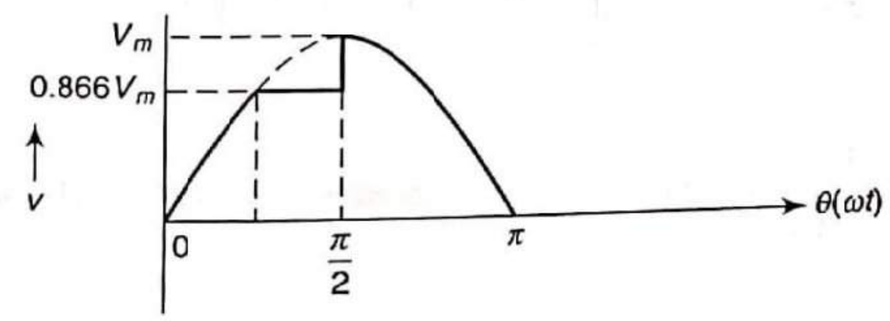

Fig. 2.20

Solution

The angle 'θ', at which the instantaneous value of the voltage becomes equal to $0.866\, V_m$, is required. This angle 'θ' can be calculated as given below.

The equation of the waveform is given by

$$v = V_m \sin\theta$$

When $v = 0.866\ V_m,\ \theta = ?$
we have $0.866\ V_m = V_m \sin\theta$
or $\theta = \sin^{-1} 0.866$
or $\theta = 60°$

Hence, $\theta = \dfrac{\pi}{3}$ rad

Now, the voltage waveform is shown in Fig. 2.21.

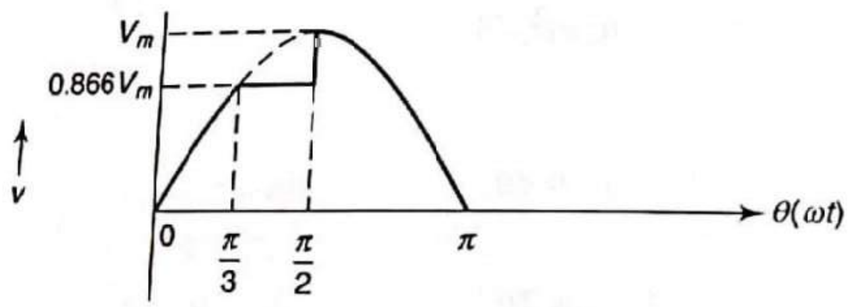

Fig. 2.21

The equations are as follows:

$$v = V_m \sin\theta, \qquad 0 < \theta < \frac{\pi}{3}$$

$$v = 0.866\ V_m, \qquad \frac{\pi}{3} < \theta < \frac{\pi}{2}$$

$$v = V_m \sin\theta, \qquad \frac{\pi}{2} < \theta < \pi$$

So, $$V_{rms} = \sqrt{\frac{1}{\pi}\int_0^{\pi} v^2\, d\theta}$$

or $$V_{rms}^2 = \frac{1}{\pi}\int_0^{\pi} v^2\, d\theta = \frac{1}{\pi}\left\{\int_0^{\pi/3} v^2\, d\theta + \int_{\pi/3}^{\pi/2} v^2\, d\theta + \int_{\pi/2}^{\pi} v^2\, d\theta\right\}$$

$$= \frac{1}{\pi}\left\{\int_0^{\pi/3} (V_m \sin\theta)^2\, d\theta + \int_{\pi/3}^{\pi/2} (0.866 V_m)^2\, d\theta + \int_{\pi/2}^{\pi} (V_m \sin\theta)^2\, d\theta\right\}$$

$$= \frac{1}{\pi}\left\{\int_0^{\pi/3} V_m^2 \sin^2\theta\, d\theta + \int_{\pi/3}^{\pi/2} (0.866 V_m)^2\, d\theta + \int_{\pi/2}^{\pi} V_m^2 \sin^2\theta\, d\theta\right\}$$

$$= \frac{V_m^2}{\pi}\left\{\int_0^{\pi/3} \left(\frac{1-\cos 2\theta}{2}\right) d\theta + \int_{\pi/3}^{\pi/2} (0.866)^2\, d\theta + \int_{\pi/2}^{\pi} \left(\frac{1-\cos 2\theta}{2}\right) d\theta\right\}$$

$$= \frac{V_m^2}{\pi}\left\{\frac{1}{2}\left[\theta - \frac{\sin 2\theta}{2}\right]_0^{\pi/3} + (0.866)^2 [\theta]_{\pi/3}^{\pi/2} + \frac{1}{2}\left[\theta - \frac{\sin 2\theta}{2}\right]_{\pi/2}^{\pi}\right\}$$

$$= \frac{V_m^2}{\pi}\left\{\frac{1}{2}\left[\frac{\pi}{3} - \frac{\sin 2\left(\frac{\pi}{3}\right)}{2} - \left(0 - \frac{\sin 2\times 0}{2}\right)\right] + (0.866)^2\left[\frac{\pi}{2} - \frac{\pi}{3}\right]\right.$$

$$\left. + \frac{1}{2}\left[\pi - \frac{\sin 2\pi}{2} - \left(\frac{\pi}{2} - \frac{\sin 2\left(\frac{\pi}{2}\right)}{2}\right)\right]\right\}$$

$$= \frac{V_m^2}{\pi}\left\{\frac{1}{2}[1.047 - 0.433] + (0.866)^2[1.57 - 1.047]\right.$$

$$\left. + \frac{1}{2}[3.14 - 0 - (1.57 - 0)]\right\}$$

$$= \frac{V_m^2}{3.14}(0.307 + 0.392 + 0.785)$$

or $V_{rms}^2 = 0.4726\ V_m^2$

Hence, $V_{rms} = 0.687\ V_m$

Example 2.13 Find the rms value of the waveform shown in Fig. 2.22.

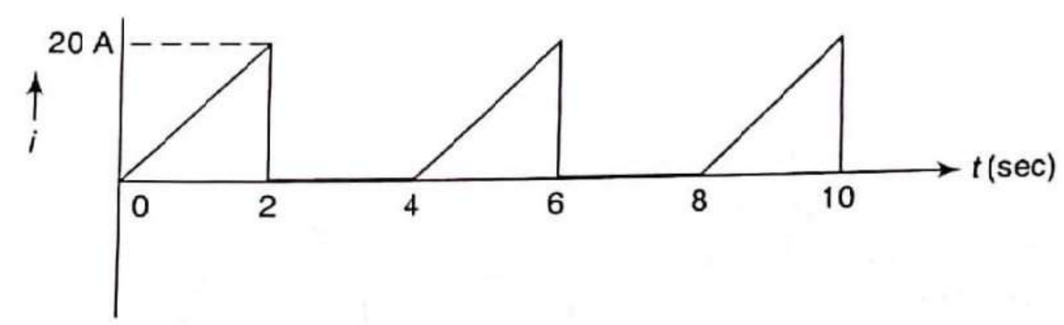

Fig. 2.22

Solution

As the given waveform is unsymmetrical, for rms value, we have to consider full cycle.

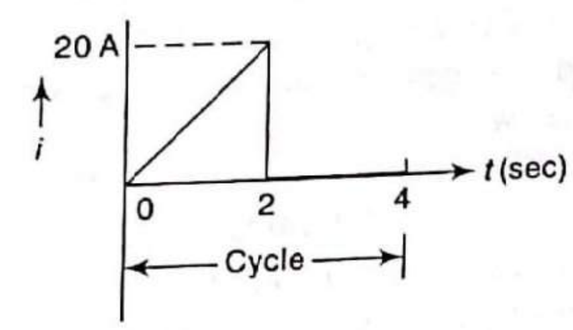

The equations of the current waveforms are:

$$i = 10t \qquad 0 < t < 2$$
$$i = 0 \qquad 2 < t < 4$$

So, $$I_{rms} = \sqrt{\frac{1}{4}\int_0^4 i^2\, dt}$$

or $$I_{rms}^2 = \frac{1}{4}\int_0^4 i^2\, dt$$

$$= \frac{1}{4}\left\{\int_0^2 i^2\,dt + \int_2^4 i^2\,dt\right\}$$

$$= \frac{1}{4}\int_0^2 (10t)^2\,dt$$

$$= \frac{(10)^2}{4}\left[\frac{t^3}{3}\right]_0^2$$

$$= \frac{(10)^2}{4}\left[\frac{(2)^3}{3} - \frac{(0)^3}{3}\right]$$

or $\quad I_{rms}^2 = 66.66$

Hence, $I_{rms} = 8.16$ A

Example 2.14 Find the rms value of the waveform in Fig. 2.23.

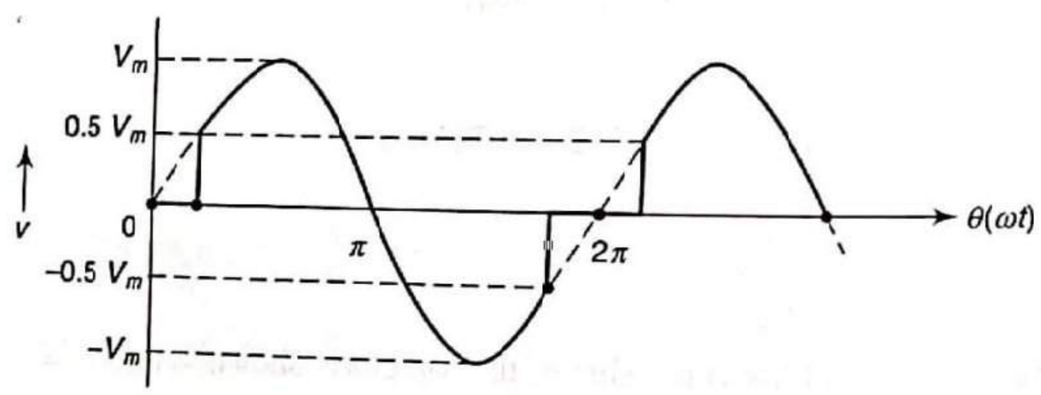

Fig. 2.23

Solution

As given waveform is symmetrical, for calculation of rms value, we can consider half or full cycle. Let us consider half cycle.

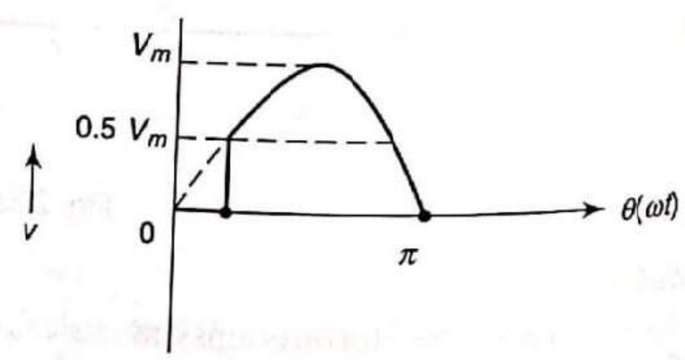

The angle 'θ' at which the instantaneous value of the voltage becomes equal to 0.5 V_m is required. This angle 'θ' can be calculated as given below.

The equation of the waveform is given as,

$$v = V_m \sin\theta$$

When $\quad v = 0.5\,V_m,\ \theta = ?$

We have $\quad 0.5\,V_m = V_m \sin\theta$

or $\quad \theta = \sin^{-1} 0.5$

or $\quad \theta = 30°$

or $\quad \theta = \frac{\pi}{6}$ rad

The equations are:

$$v = 0, \qquad 0 < \theta < \frac{\pi}{6}$$

$$v = V_m \sin\theta, \qquad \frac{\pi}{6} < \theta < \pi$$

We have $\quad V_{rms} = \sqrt{\frac{1}{\pi}\int_0^{\pi} v^2\,d\theta}$

or $\quad V_{rms}^2 = \frac{1}{\pi}\left\{\int_0^{\pi/6} v^2\,d\theta + \int_{\pi/6}^{\pi} v^2\,d\theta\right\}$

$$= \frac{1}{\pi}\int_{\pi/6}^{\pi} (V_m \sin\theta)^2\,d\theta$$

$$= \frac{V_m^2}{\pi}\int_{\pi/6}^{\pi} \sin^2\theta\,d\theta$$

$$= \frac{V_m^2}{\pi}\int_{\pi/6}^{\pi} \left(\frac{1-\cos 2\theta}{2}\right)d\theta$$

$$= \frac{V_m^2}{\pi \times 2}\left\{\theta - \frac{\sin 2\theta}{2}\right\}_{\pi/6}^{\pi}$$

$$= \frac{V_m^2}{\pi \times 2}\left\{\pi - \frac{\sin 2\pi}{2} - \left[\frac{\pi}{6} - \frac{\sin 2\left(\frac{\pi}{6}\right)}{2}\right]\right\}$$

$$= \frac{V_m^2}{3.14 \times 2}\{3.14 - 0 - (0.523 - 0.433)\}$$

$$= 0.4856\ V_m^2$$

Hence, $\quad V_{rms} = 0.697\ V_m$

Example 2.15 Find the rms value of the waveform shown in Fig. 2.24.

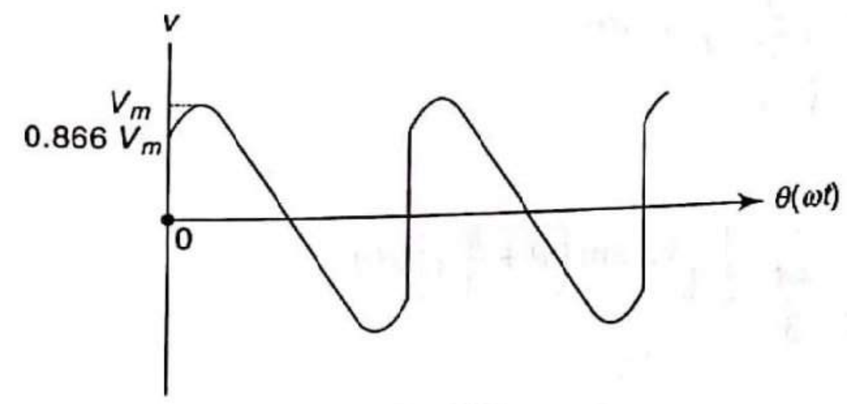

Fig. 2.24

Solution

As the given waveform is symmetrical, for calculation of rms value, we can consider half or full cycle. Let us consider half cycle.

The given waveform is varying sinusoidally, but it does not start at $\theta = 0$ (i.e.,

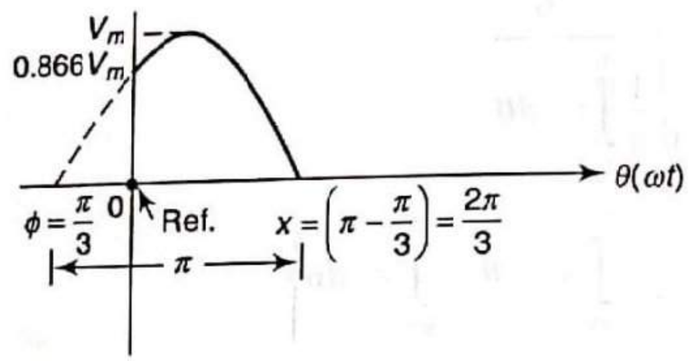

reference point).

If we extend the waveform towards left of Y-axis, it would have been started at angle ϕ. The base length of half cycle is π rad. Therefore, the angle θ at point x can be calculated as

$$x = (\pi - \phi) \text{ rad}$$

Now, equation of the given waveform is given by

$$v = V_m \sin(\theta + \phi), \text{ where } \phi \text{ is the phase angle.}$$

The phase angle ϕ can be calculated as given below.

The standard equation of the given waveform is

$$v = V_m \sin(\theta + \phi)$$

When $v = 0.866\ V_m$, $\theta = 0$.

So, $\quad 0.866\ V_m = V_m \sin(0 + \phi)$

or $\quad \phi = \sin^{-1} 0.866$

or $\quad \phi = \frac{\pi}{3}$ rad

Thus, the equation of the given waveform is

$$v = V_m \sin\left(\theta + \frac{\pi}{3}\right)$$

Now,

$$V_{rms} = \sqrt{\frac{1}{\frac{2\pi}{3}} \int_0^{2\pi/3} v^2\, d\theta}$$

So, $$V_{rms}^2 = \frac{1}{\frac{2\pi}{3}} \int_0^{2\pi/3} \left[V_m \sin\left(\theta + \frac{\pi}{3}\right)\right]^2 d\theta$$

$$= \frac{3}{2\pi} \cdot V_m^2 \int_0^{2\pi/3} \sin^2\left(\theta + \frac{\pi}{3}\right) d\theta$$

$$= \frac{3V_m^2}{2\pi} \int_0^{2\pi/3} \left[\frac{1 - \cos 2\left(\theta + \frac{\pi}{3}\right)}{2}\right] d\theta$$

$$= \frac{3V_m^2}{2\pi \times 2} \left\{\theta - \frac{\sin 2\left(\theta + \frac{\pi}{3}\right)}{2}\right\}_0^{2\pi/3}$$

$$= \frac{3V_m^2}{2\pi \times 2} \left\{\frac{2\pi}{3} - \frac{\sin 2\left(\frac{2\pi}{3} + \frac{\pi}{3}\right)}{2} - \left[0 - \frac{\sin 2\left(0 + \frac{\pi}{3}\right)}{2}\right]\right\}$$

$$= \frac{3V_m^2}{2\pi \times 2} \left\{\frac{2 \times 3.14}{3} - \frac{\sin 2\pi}{2} - \left[0 - \frac{\sin \frac{2\pi}{3}}{2}\right]\right\}$$

$$= \frac{3V_m^2}{2\pi \times 2} \left\{2.093 - \frac{0}{2} - \left[0 - \frac{0.866}{2}\right]\right\}$$

or $\quad V_{rms}^2 = 0.603\ V_m^2$

Hence, $V_{rms} = 0.7767\ V_m$

Example 2.16 Find the effective value of the resultant current that carries simultaneously a direct current of 10A and a sinusoidal ac of peak value 10A.

Solution

The equation of the resultant current will be

$$i = (10 + 10 \sin \theta)$$

So, $$I_{rms} = \sqrt{\frac{1}{2\pi} \int_0^{2\pi} i^2\, d\theta}$$

or $$I_{rms}^2 = \frac{1}{2\pi} \int_0^{2\pi} (10 + 10 \sin \theta)^2\, d\theta$$

$$= \frac{1}{2\pi} \int_0^{2\pi} (100 + 200 \sin \theta + 100 \sin^2 \theta)\, d\theta$$

$$= \frac{100}{2\pi} \int_0^{2\pi} (1 + 2 \sin \theta + \sin^2 \theta)\, d\theta$$

$$= \frac{100}{2\pi} \int_0^{2\pi} \left[1 + 2 \sin \theta + \left(\frac{1 - \cos 2\theta}{2}\right)\right] d\theta$$

$$= \frac{100}{2\pi}\left[\theta - 2\cos\theta + \frac{\theta}{2} - \frac{\sin 2\theta}{4}\right]_0^{2\pi}$$

$$= \frac{100}{2\pi}\left[2\pi - 2\cos 2\pi + \frac{2\pi}{2} - \frac{\sin 4\pi}{4} - \left(0 - 2\cos 0 + \frac{0}{2} - \frac{\sin 0}{4}\right)\right]$$

$$= \frac{100}{2\pi}\left[2\pi - 2 + \frac{2\pi}{2} + 2\right]$$

$$= \frac{100}{2\pi} \times 3\pi$$

or $\quad I_{rms}^2 = 150$

Hence, $I_{rms} = 12.25$ A

Example 2.17 The equation of an alternating current is $i = 62.35 \sin 323t$ A. Determine (i) maximum value, (ii) frequency, (iii) rms value, (iv) average value, and (v) form factor.

Solution

(i) $I_m = 62.35$ A

(ii) Frequency, $f = \frac{323}{2\pi} = 51.41$ Hz

(iii) rms value, $I_{rms} = \frac{I_m}{\sqrt{2}} = \frac{62.35}{\sqrt{2}} = 44.1$ A

(iv) Average value, $I_{average} = 0.637\, I_m = 39.7$ A

(v) Form factor $= \frac{I_{rms}}{I_{average}}$

$$= \frac{44.1}{39.7}$$

$$= 1.11$$

2.1.8 Phase Angle and Phasor

To understand the concept of phase angle and phasor, consider the following cases.

Case (i) The sinusoidal alternating current represented by the waveform shown in Fig. 2.25.

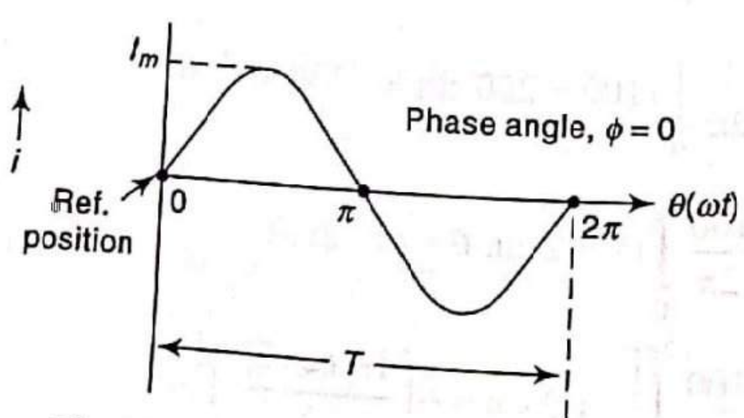

Fig. 2.25 Concept of phase angle ($\phi = 0$)

The X-axis is marked as 'ωt'. As 'ω' is constant, X-axis is the time axis. The instant from which time is measured (counted) is called reference position or zero (origin) position. In Fig. 2.25, the current attains its zero value exactly at reference position (or we can say that time is counted when the instant current is zero). Therefore, the phase angle of the current is said to be zero (i.e., $\phi = 0$). The given sinusoidal alternating current can be expressed by the equation

$$i = I_m \sin(\omega t \pm 0)$$

This equation is known as standard sinusoidal form. The alternating current can be represented by the phasor. Length of the phasor represents magnitude, i.e., rms value, and inclination w.r.t. reference axis such as X-axis is equal to the phase angle of that quantity. Thus, the given alternating current can be represented by phasor as shown in Fig. 2.26.

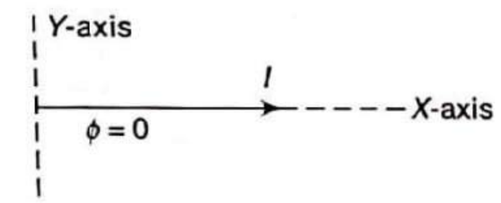

Fig. 2.26 Phasor

An alternating quantity is generally referred by its rms value. As a result, length of the phasor is drawn equal to the rms value (i.e., $I = \frac{I_m}{\sqrt{2}}$) instead of the maximum value. In practice, the rms values are denoted by capital letter such as 'I' or 'V', instead of I_{rms} or V_{rms}.

Case (ii) The sinusoidal alternating voltage represented by the waveform shown in Fig. 2.27.

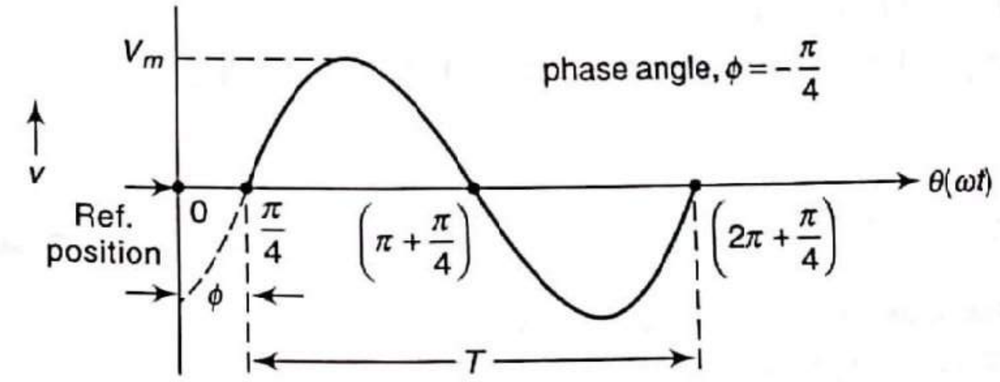

Fig. 2.27 Concept of phase angle ($\phi = -\pi/4$)

The voltage attains its zero value (first time) after a reference position by an angle $\pi/4$ rad or 45° (i.e., it lags behind reference). Therefore, phase angle of the voltage is $-\pi/4$ rad or $-45°$. Here the standard sinusoidal form of the given quantity is

$$v = V_m \sin\left(\omega t - \frac{\pi}{4}\right)$$

or $\quad v = V_m \sin(\omega t - 45°)$

The corresponding voltage phasor is shown in Fig. 2.28.

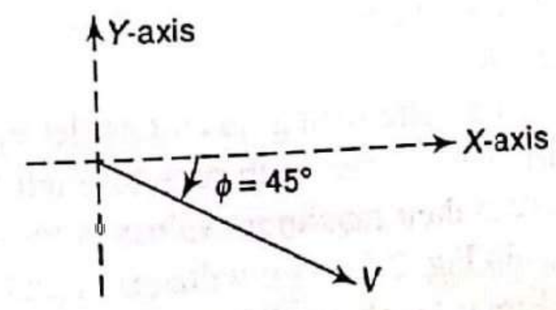

Fig. 2.28 Phasor

Length of phasor, $V = \dfrac{V_m}{\sqrt{2}}$

The negative phase angle is plotted in clockwise direction from positive X-axis.

Case (iii) The sinusoidal alternating current represented by the waveform shown in Fig. 2.29.

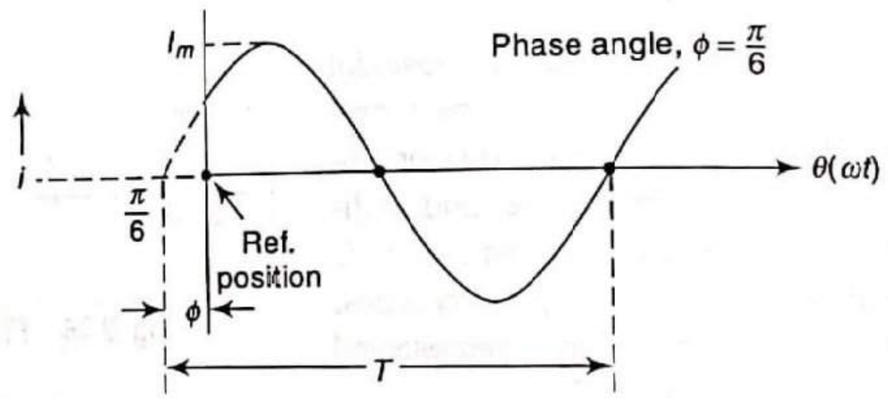

Fig. 2.29 Concept of phase angle ($\phi = \pi/6$)

The current attains its zero value (first time) before a reference position by an angle $\pi/6$ rad or 30° (i.e., it leads reference). Therefore, phase angle of the voltage is positive ($+\pi/6$ rad or 30°). The standard sinusoidal form of the given quantity is

$$i = I_m \sin\left(\omega t + \frac{\pi}{6}\right)$$

or $\quad i = I_m \sin(\omega t + 30)$

The corresponding current phasor is shown in Fig. 2.30.

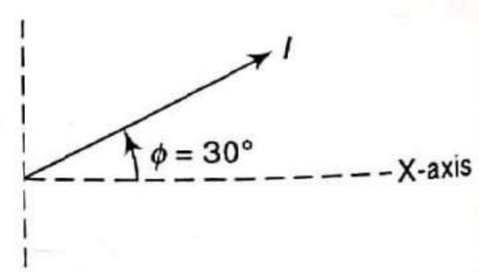

Fig. 2.30 Phasor

Length of phasor, $I = \dfrac{I_m}{\sqrt{2}}$

The positive phase angle is plotted in anticlockwise direction from positive X-axis.

2.1.9 In Phase, Out of Phase, and Phase Difference

When an alternating voltage is applied to the circuit, an alternating current of the same frequency flows through the circuit. In some circuits, the applied voltage and circuit current remains in phase. In most of the circuits, for reasons we will discuss later, voltage or current are out of phase (i.e., have different phase angles).

Two alternating quantities (let v_1 and v_2) of the same frequency are said to be in phase, when each pass through their zero value at the same instant and also attain their maximum values at the same instant in a given cycle (see Fig. 2.31).

In Fig. 2.31, two voltages v_1 and v_2 are in phase to each other. In other words, there is no phase difference between the two. The phase difference is zero ($\phi = 0$).

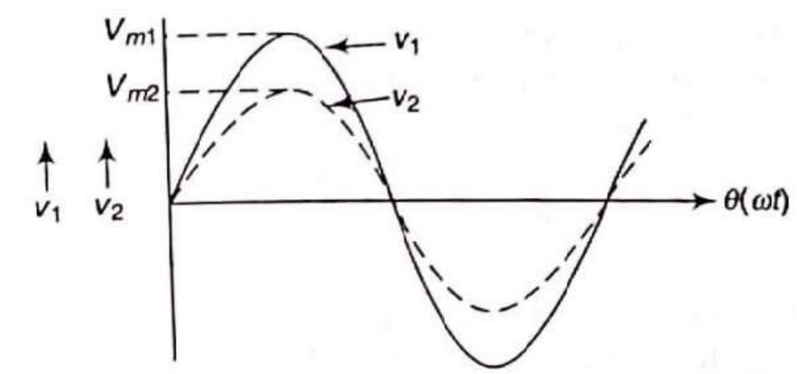

Fig. 2.31 Voltages in phase

The standard sinusoidal forms of the above two quantities are:

$$v_1 = V_{m1} \sin \omega t$$

$$v_2 = V_{m2} \sin \omega t$$

The above two voltages can be shown in the same phasor diagram (see Fig. 2.32).

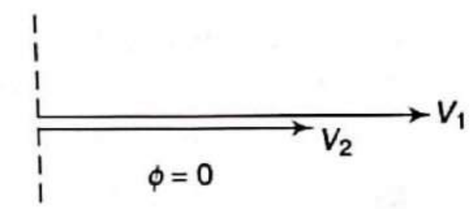

Fig. 2.32 Phasor diagram

When two alternating quantities (let v and i) of the same frequency (same time period) reach their maximum or zero value at the different instants, then the alternating quantities are said to have a phase difference or out of phase (see Fig. 2.33).

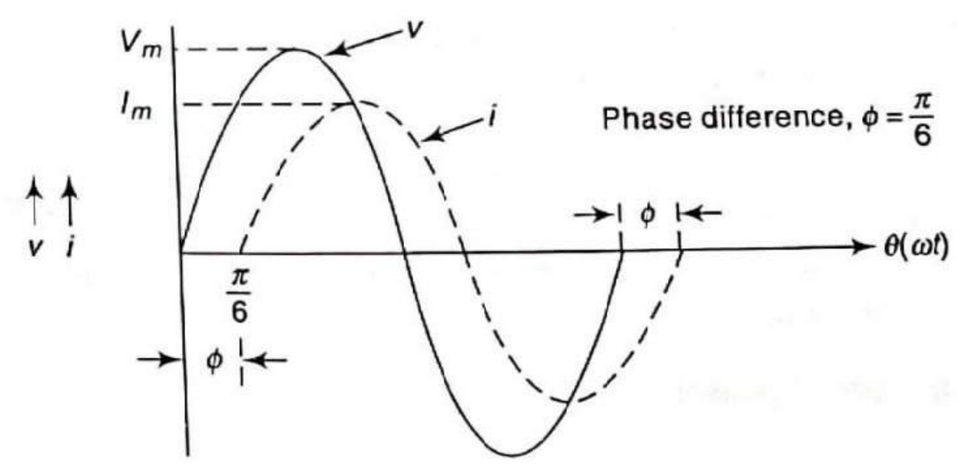

Fig. 2.33 Concept of phase difference

In Fig. 2.33, voltage passes through its zero value earlier than current by an angle ϕ (= $\pi/6$). Therefore, the voltage is said to be leading while the current is said to be lagging. It should be noted that those zero values of alternating quantities are to be considered where they pass in the same direction. Thus, if the voltage has passed through its zero value and is rising in the positive direction, then zero value considered for the current should have similar situation.

The equations (standard sinusoidal forms) of voltage and current are:

$$v = V_m \sin \omega t$$

$$i = I_m \sin\left(\omega t - \frac{\pi}{6}\right)$$

In the current equation, minus sign is used because the current lags behind the voltage.

Figure 2.34 shows the phasor diagram.

In this case, the current lags behind the voltage by an angle $\phi(= \pi/6$ rad or $30°)$.

As phase angle of the voltage is zero, it acts as a reference quantity. Remember that the lagging and leading words are relative to the reference. In this case, if we take the current as reference, we have to say that the voltage leads current by angle ϕ.

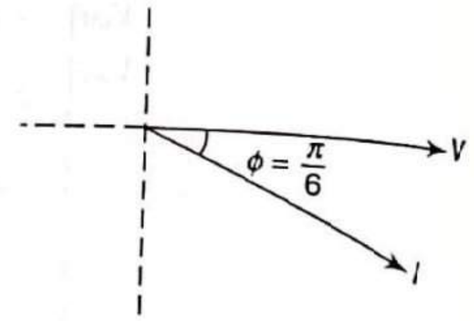

Fig. 2.34 Phasor diagram

2.1.10 Phasor Algebra

Mathematical representation of any phasor (current, voltage, or impedance) is known as **phasor algebra**.

The phasor can be represented mathematically in two ways: (a) rectangular form and (b) polar form.

(a) Rectangular form

It is a complex form in which operator 'j' is used. Operator 'j' is same as operator 'i' in complex form. Consider a current phasor (I) as shown in Fig. 2.35.

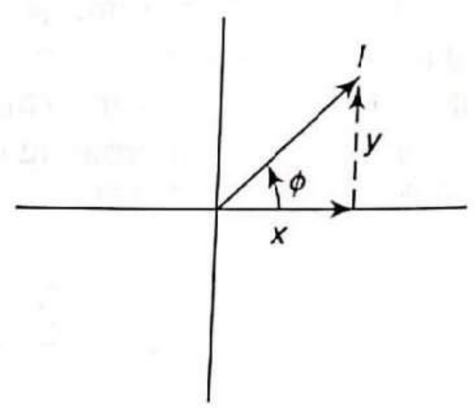

Fig. 2.35 Current phasor

In rectangular form, the phasor is resolved into horizontal (x) and vertical (y) components and expressed in complex form, i.e., $\bar{I} = (x + jy)$ A

where x = Real part, horizontal component, or x-component

y = Imaginary part, vertical component, or y-component

From rectangular form,

$$\text{Magnitude of phasor, } I = \sqrt{x^2 + y^2}$$

Its angle w.r.t. X-axis, $\phi = \tan^{-1} \frac{y}{x}$.

This form is used for addition and subtraction of alternating quantities.

(b) Polar form

In this form, current phasor is represented by $(I \angle \pm\phi)$ or voltage phasor is represented as $(V \angle \pm\phi)$.

Consider a voltage phasor as shown in Fig. 2.36.

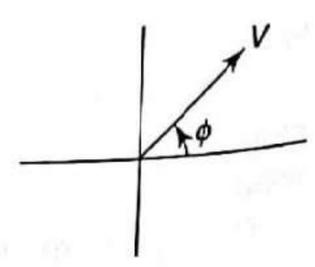

Fig. 2.36 Voltage phasor

The polar form of the voltage phasor, $\bar{V} = (V\angle\phi)$ V where V is the magnitude (rms value) and ϕ is the phase angle (i.e., angle made with +ve X-axis), which is taken as positive if measured anticlockwise direction while negative if measured clockwise direction w.r.t. positive X-axis. This form is used for multiplication and division of alternating quantities. This form is also used for drawing a phasor diagram of ac circuit.

Remember that the phase angle (ϕ), i.e., angle made by the phasor with +ve X-axis can be measured in two ways. For example, consider a current phasor of magnitude 10 A as shown in Fig. 2.37. The phase angle of current phasor is 190° if measured in clockwise direction, or 170° if measured in anticlockwise direction.

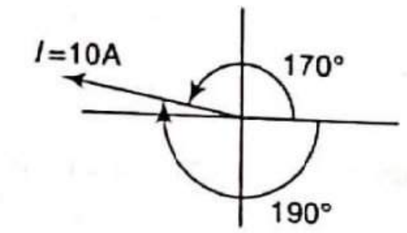

Fig. 2.37 Concept of +ve and −ve phase angles

The polar form of the current phasor is

$$\bar{I} = (10 \angle 170°) \text{ A}$$

or

$$\bar{I} = (10 \angle -190°) \text{ A}$$

2.1.11 Addition and Subtraction of Alternating Quantities

It is often required in ac analysis to add or subtract the two or more alternating quantities with same frequency but with different amplitudes and phases. The addition or subtraction using waveforms is much tedious and cumbersome. So, it is always preferred to add or subtract these quantities by using respective phasors.

Addtion and subtraction of alternating currents and voltages can be accomplished by one of the following methods:

(i) By phasor diagram (graphical method)

(ii) By phasor algebra

Graphical method (by phasor diagram)

Let us take an illustrative example of adding currents:

$$i_1 = 7.07 \sin(\omega t - 45) \quad \text{and} \quad i_2 = 4.24 \sin(\omega t + 30)$$

The rms values are: $I_1 = \frac{7.07}{\sqrt{2}} = 5$ A

$$I_2 = \frac{4.24}{\sqrt{2}} = 3 \text{ A}$$

In this method, the phasor diagram is required to be plotted to the scale. Now, the polar forms of the two currents are:

$$\bar{I}_1 = (5 \angle -45) \text{ A}$$

$$\bar{I}_2 = (3 \angle 30) \text{ A}$$

Take scale 1 cm = 1 A. Draw I_1 = 5 cm at −45° and I_2 = 3 cm at 30°, with respect to positive X-axis (reference) as shown in Fig. 2.38. Complete the parallelogram. Then the diagonal (=6.4cm by measurement) represents the resultant current. Angle made with positive X-axis by the resultant is the phase angle, $\phi = -19°$ (by measurement).

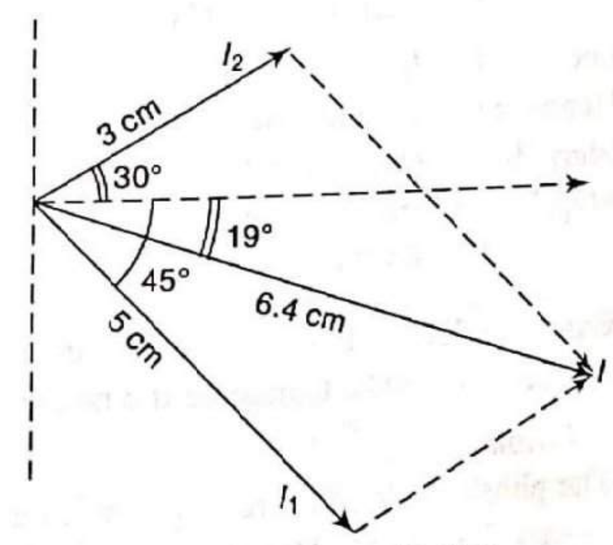

Fig. 2.38 Phasor diagram

From phasor diagram,

Resultant, I = 6.4 A

Phase angle, $\phi = -19°$

i.e., $\bar{I} = (6.4 \angle -19)$ A

So, $I_m = 6.4 \times \sqrt{2} = 9.05$ A

Hence, equation of the resultant current is given by

$$i = 9.05 \sin(\omega t - 19°)$$

By phasor algebra

Steps to be followed in phasor algebra method are as follows:

Step I Write all the given quantities in standard sinusoidal forms, i.e., for voltage, standard sinusoidal form is $v = V_m \sin(\omega t \pm \phi)$ and for current, it is $i = I_m \sin(\omega t \pm \phi)$.

The RHS of the equation must be positive and sin function only. Any non-standard sinusoidal form can be converted into standard sinusoidal form by using the following trigonometric formulae:

$$\cos\alpha = \sin(\alpha + 90°)$$
$$-\sin\alpha = \sin(\alpha + 180°)$$

Step II Convert the standard sinusoidal forms into polar forms.

Step III Convert the polar forms into rectangular forms. Add or subtract as required. The result will be in rectangular form.

Step IV Convert the rectangular form of result into polar form.

Step V Convert the result from polar form into standard sinusoidal form.

Let us take an illustrative example of adding the currents:

$$i_1 = -565.69 \sin(\omega t + 20) \quad \text{and} \quad i_2 = 10 \cos(\omega t + 10)$$

Step I Standard sinusoidal forms of the given quantities are:

$$i_1 = 565.69 \sin(\omega t + 200) \text{ A}$$
$$i_2 = 10 \sin(\omega t + 100) \text{ A}$$

Step II Converting the standard sinusoidal forms into polar forms,

$$\bar{I}_1 = (400 \angle 200) \text{ A}$$
$$\bar{I}_2 = (7.07 \angle 100) \text{ A}$$

Step III Converting the polar forms into rectangular forms,

$$\bar{I}_1 = (-375.88 - j136.81)$$
$$\bar{I}_2 = (-1.23 + j6.96)$$

Let $\bar{I} = \bar{I}_1 + \bar{I}_2$

Hence, resultant current, $\bar{I} = (-377.11 - j129.85)$ A

Step IV Taking polar form of resultant current, $\bar{I} = (398.84 \angle -161°)$ A

Step V Writing the equation of resultant current,

$$i = 564.04 \sin(\omega t - 161°)$$

Example 2.18 Two sinusoidal currents are given by $i_1 = 10\sin(\omega t + \pi/3)$ and $i_2 = 15\sin(\omega t - \pi/4)$. Calculate the phase difference between them in degrees.

Solution

The phase angle of current i_1 is $\pi/3$, i.e., 60°, while the phase angle of current $i_2 = -\pi/4$, i.e., −45°. This is shown in Fig. 2.39.

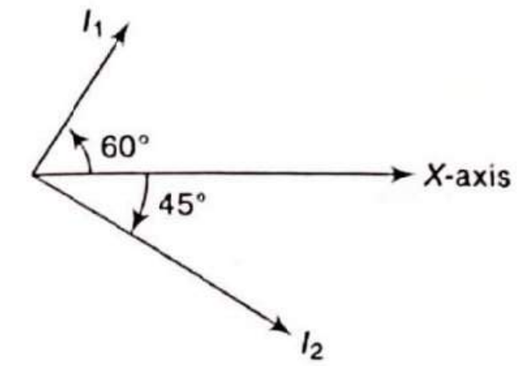

Fig. 2.39

Hence, the phase difference between the two currents is

$$\phi = \phi_1 - \phi_2 = 60 - (-45) = 105°$$

and I_2 lags behind I_1 by ϕ.

Example 2.19 The instantaneous values of two alternating voltages are represented respectively by $v_1 = 60 \sin\theta$ and $v_2 = 40 \sin(\theta + \pi/3)$. Derive the expression for the instantaneous values of (i) the sum and (ii) the difference of these voltages.

Draw neat phasor diagram with each and every value of the quantity marked.

Solution

The given voltages are, $v_1 = 60 \sin\theta$ and $v_2 = 40 \sin\left(\theta + \frac{\pi}{3}\right)$

The rms values of the two voltages are:

$$V_1 = \frac{60}{\sqrt{2}} = 42.43 \text{ V and } V_2 = \frac{40}{\sqrt{2}} = 28.28 \text{ V}$$

Writing the polar forms of the voltages,

$$\bar{V}_1 = (42.43 \angle 0°) \text{ V and } \bar{V}_2 = (28.28 \angle 60°) \text{ V}$$

Converting the polar forms into rectangular forms,

$$\bar{V}_1 = (42.43 + j0) \text{ V and } \bar{V}_2 = (14.14 + j24.49) \text{ V}$$

Case (i) Sum of the two voltages

Let the sum of the two voltages, i.e., resultant is V_A.

So, $\bar{V}_A = \bar{V}_1 + \bar{V}_2$

or $\bar{V}_A = (42.43 + j0) + (14.14 + j24.49)$

or $\bar{V}_A = (56.57 + j24.49)$ volt

Converting into polar form,

$$\bar{V}_A = (61.64 \angle 23.41) \text{ volt}$$

Maximum value of the resultant voltage, $V_m = 61.64 \times \sqrt{2} = 87.17$ V

Expression for the instantaneous value of sum is

$$v_A = 87.17 \sin(\omega t + 23.41°)$$

Phasor diagram:

$$\bar{V}_A = \bar{V}_1 + \bar{V}_2; \qquad \bar{V}_1 = (42.43 \angle 0°) \text{ V}$$

$$\bar{V}_2 = (28.28 \angle 60°) \text{ V}$$

Scale: 1 cm = 10 V

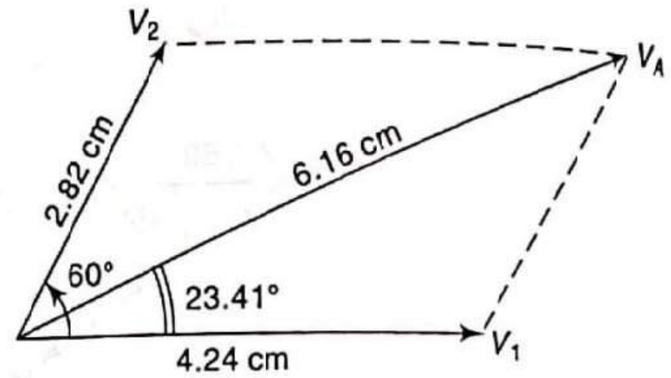

Fig. 2.40

Case (ii) Difference of the two voltages

Let the difference of the two voltages is V_B.

So, $\bar{V}_B = \bar{V}_1 - \bar{V}_2$

or $\bar{V}_B = (42.43 + j0) - (14.14 + j24.49)$

or $\bar{V}_B = (28.29 - j24.49)$ V

Converting into polar form,

$\bar{V}_B = (37.42 \angle -40.88)$ V

Maximum value of the resultant voltage, $V_m = \sqrt{2} \times 37.42 = 52.92$ V.

Expression for the instantaneous value of difference is

$v_B = 52.92 \sin(\omega t - 40.88)$

Phasor diagram:

$\bar{V}_B = \bar{V}_1 - \bar{V}_2$; $\bar{V}_1 = (42.42 \angle 0)$

$\bar{V}_2 = (28.28 \angle 60)$

Scale: 1 cm = 10 V

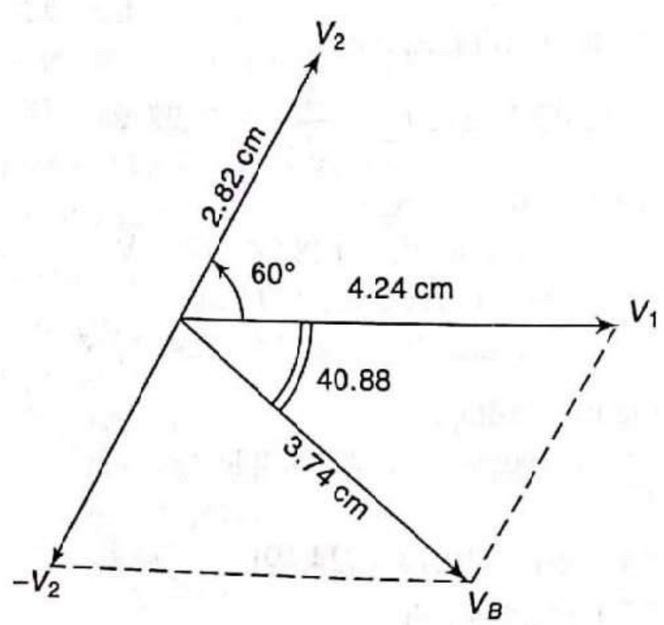

Fig. 2.41

Example 2.20 A voltage is defined as $-V_m \cos \omega t$. Express it in polar form.

Solution

To express a voltage in polar form, first we have to write the standard sinusoidal form as follows:

$$v = -V_m \cos \omega t$$

or $$v = -V_m \sin\left(\omega t + \frac{\pi}{2}\right) \qquad \because \cos\alpha = \sin\left(\alpha + \frac{\pi}{2}\right)$$

or $$v = V_m \sin\left(\omega t + \frac{\pi}{2} + \pi\right) \qquad \because -\sin\alpha = \sin(\alpha + \pi)$$

or $$v = V_m \sin\left(\omega t + \frac{3}{2}\pi\right)$$

or $$v = V_m \sin(\omega t + 270)$$

Now, it can be expressed in polar form as

$$\bar{V} = \left(\frac{V_m}{\sqrt{2}} \angle 270°\right) \text{ V}$$

or $$\bar{V} = \left(\frac{V_m}{\sqrt{2}} \angle -90°\right) \text{ V} \qquad \text{(since +270° phase is nothing but –90°)}$$

Example 2.21 Find the resultant of the following voltages:

$$v_1 = 25 \sin \omega t$$

$$v_2 = 10 \sin\left(\omega t + \frac{\pi}{6}\right)$$

$$v_3 = 30 \cos \omega t$$

$$v_4 = 20 \sin\left(\omega t - \frac{\pi}{4}\right)$$

Solution

Writing the standard sinusoidal forms of the given quantities,

$$v_1 = 25 \sin \omega t$$

$$v_2 = 10 \sin\left(\omega t + \frac{\pi}{6}\right)$$

$$v_3 = 30 \sin\left(\omega t + \frac{\pi}{2}\right)$$

$$v_4 = 20 \sin\left(\omega t - \frac{\pi}{4}\right)$$

Converting the standard sinusoidal forms into polar forms,

$\bar{V}_1 = (17.68 \angle 0)$ V

$\bar{V}_2 = (7.07 \angle 30)$ V

$\bar{V}_3 = (21.21 \angle 90)$ V

$\bar{V}_4 = (14.14 \angle -45)$ V

Converting the polar forms into rectangular forms,

$\bar{V}_1 = (17.68 + j0)$ V

$\bar{V}_2 = (6.12 + j3.54)$ V

$\bar{V}_3 = (0 + j21.21)$ V

$\bar{V}_4 = (10 - j10)$ V

Let the resultant voltage is $\bar{V}$.

So, $\bar{V} = \bar{V}_1 + \bar{V}_2 + \bar{V}_3 + \bar{V}_4$

or $\bar{V} = (17.68 + j0) + (6.12 + j3.54) + (0 + j21.21) + (10 - j10)$

or $\bar{V} = (33.8 + j14.75)$ V

Converting into polar form,

$$\bar{V} = (36.88 \angle 23.58) \text{ V}$$

Converting into standard sinusoidal form,

$$v = 52.16 \sin(\omega t + 23.58)$$

Example 2.22 The voltage drops across the four series-connected impedances are:

$$v_1 = 60 \sin\left(\omega t + \frac{\pi}{6}\right)$$

$$v_2 = 75 \sin\left(\omega t - \frac{5}{6}\pi\right)$$

$$v_3 = 100 \cos\left(\omega t + \frac{\pi}{4}\right)$$

$$v_4 = V_{m4} \sin(\omega t + \phi_4)$$

Calculate the values of V_{m4} and ϕ_4 if the applied voltage across the series circuit is $140 \sin\left(\omega t + \frac{3\pi}{5}\right)$.

Solution

Let the four series-connected impedances are Z_1, Z_2, Z_3 and Z_4. The applied voltage is $v = 140 \sin\left(\omega t + \frac{3\pi}{5}\right)$. The voltage drops across the impedances are v_1, v_2, v_3, and v_4 (see Fig. 2.42).

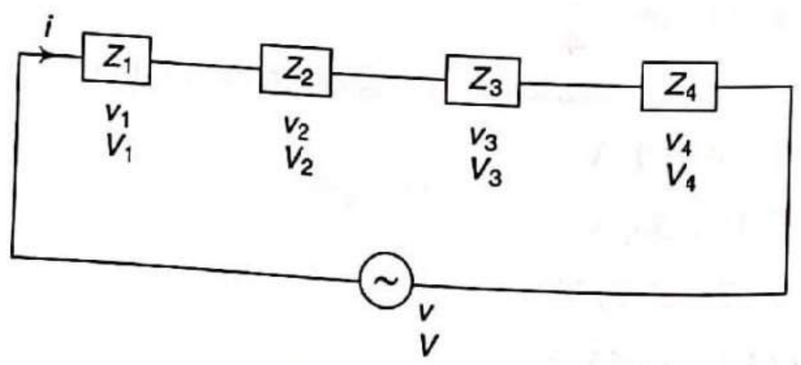

Fig. 2.42

The symbols v_1, v_2, v_3, v_4 represent the instantaneous values of the voltage drops and V_1, V_2, V_3, V_4 represent the rms values of the voltage drops.

Writing the standard sinusoidal forms of the given quantities, we get

$$v_1 = 60 \sin\left(\omega t + \frac{\pi}{6}\right)$$

$$v_2 = 75 \sin\left(\omega t - \frac{5}{6}\pi\right)$$

$$v_3 = 100 \sin\left(\omega t + \frac{3}{4}\pi\right)$$

applied voltage, $v = 140 \sin\left(\omega t + \frac{3\pi}{5}\right)$

Converting the standard sinusoidal forms into polar forms,

$$\bar{V}_1 = (42.43 \angle 30) \text{ V}$$

$$\bar{V}_2 = (53.03 \angle -150) \text{ V}$$

$$\bar{V}_3 = (70.71 \angle 135) \text{ V}$$

$$\bar{V} = (99 \angle 108) \text{ V}$$

Converting the polar forms into rectangular forms,

$$\bar{V}_1 = (36.75 + j21.22) \text{ V}$$

$$\bar{V}_2 = (-45.93 - j26.52) \text{ V}$$

$$\bar{V}_3 = (-50 + j50) \text{ V}$$

$$\bar{V} = (-30.59 + j94.15) \text{ V}$$

From the circuit diagram shown in Fig. 2.42,

$$\bar{V} = \bar{V}_1 + \bar{V}_2 + \bar{V}_3 + \bar{V}_4$$

or $\bar{V}_4 = \bar{V} - (\bar{V}_1 + \bar{V}_2 + \bar{V}_3)$

or $\bar{V}_4 = (-30.59 + j94.15) - [(36.75 + j21.22) + (-45.93 - j26.52) + (-50 + j50)]$

or $\bar{V}_4 = (-30.59 + j94.15) - (-59.18 + j44.7)$

or $\bar{V}_4 = (28.59 + j49.45)$ V

Converting into polar form,

$$\bar{V}_4 = (57.12 \angle 59.97) \text{ V}$$

Converting into standard sinusoidal form,

$$v_4 = 80.78 \sin(\omega t + 59.97)$$

Hence, $V_{m4} = 80.78$ V and $\phi_4 = 59.97°$

Example 2.23 Four wires p, q, r, and s are connected to a common point. The currents in lines p, q, and r are $6 \sin\left(\omega t + \frac{\pi}{3}\right)$, $5 \cos\left(\omega t + \frac{\pi}{3}\right)$, and $3 \cos\left(\omega t + \frac{\pi}{3}\right)$. Find the current in wire s.

Solution

Let the instantaneous values of the currents in lines p, q, r, and s are i_1, i_2, i_3, and i_4 respectively (see Fig. 2.43).

According to Kirchhoff's current law, sum of these currents must be zero. This means that current in the fourth wire (i.e., wire s) is the phasor sum of all the first three currents, i.e.,

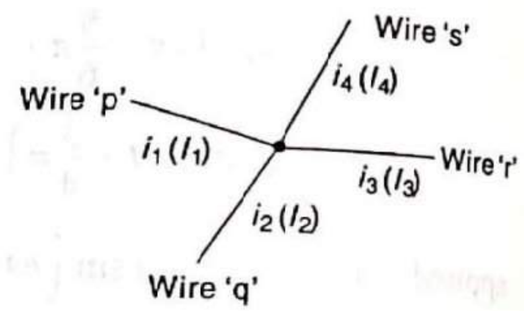

Fig. 2.43

$$\bar{I}_1 + \bar{I}_2 + \bar{I}_3 + \bar{I}_4 = 0$$

So, $\bar{I}_4 = -(\bar{I}_1 + \bar{I}_2 + \bar{I}_3)$

Thus,

$$i_1 = 6 \sin\left(\omega t + \frac{\pi}{3}\right)$$

$$i_2 = 5 \cos\left(\omega t + \frac{\pi}{3}\right)$$

$$i_3 = 3 \cos\left(\omega t + \frac{\pi}{3}\right)$$

The standard sinusoidal forms of the given currents are:

$$i_1 = 6 \sin\left(\omega t + \frac{\pi}{3}\right)$$

$$i_2 = 5 \sin\left(\omega t + \frac{5\pi}{6}\right)$$

$$i_3 = 3 \sin\left(\omega t + \frac{5\pi}{6}\right)$$

Converting the standard sinusoidal forms into polar forms,

$$\bar{I}_1 = (4.24 \angle 60) \text{ A}$$

$$\bar{I}_2 = (3.54 \angle 150) \text{ A}$$

$$\bar{I}_3 = (2.12 \angle 150) \text{ A}$$

Converting the polar forms into rectangular forms,

$$\bar{I}_1 = (2.12 + j3.67) \text{ A}$$

$$\bar{I}_2 = (-3.07 + j1.77) \text{ A}$$

$$\bar{I}_3 = (-1.84 + j1.06) \text{ A}$$

Current in wire s can be calculated as

$$\bar{I}_4 = -(\bar{I}_1 + \bar{I}_2 + \bar{I}_3)$$

or $\bar{I}_4 = -[(2.12 + j3.67) + (-3.07 + j1.77) + (-1.84 + j1.06)]$

or $\bar{I}_4 = -(-2.79 + j6.5) \text{ A}$

or $\bar{I}_4 = (2.79 - j6.5) \text{ A}$

Converting into polar form,

$$\bar{I}_4 = (7.07 \angle -66.77) \text{ A}$$

Converting into the standard sinusoidal form,

$$i_4 = 10 \sin(\omega t - 66.77)$$

Example 2.24 Three coils are connected in series. Each of them generates an emf of 230 V. The emf of the second coil leads that of the first coil by 120°, and the emf of the third coil lags behind that of the first by the same angle. What is the resultant emf across the series combination of the coils?

Solution

Let the emf generated in the first coil is E_1.

By taking this emf as reference, we can express in polar form as

$$\bar{E}_1 = (230 \angle 0) \text{ V}$$

Let the emf generated in the second coil is E_2. As E_2 leads E_1 by 120°, we get the polar form as

$$\bar{E}_2 = (230 \angle 120) \text{ V}$$

Let the emf generated in the third coil is E_3. As E_3 lags behind E_1 by 120°, we get the polar form as

$$\bar{E}_3 = (230 \angle -120°) \text{ V}$$

Now, the resultant emf E_R across the series combination of the coils is

$$\bar{E}_R = \bar{E}_1 + \bar{E}_2 + \bar{E}_3$$
$$= (230 \angle 0) + (230 \angle 120) + (230 \angle -120)$$
$$= (230 + j0) + (-115 + j200) + (-115 - j200)$$

So, $\bar{E}_R = 0 \text{ V}$

Example 2.25 The instantaneous voltages across each of four series-connected coils are given by

$$v_1 = 100 \sin \omega t$$

$$v_2 = 250 \cos \omega t$$

$$v_3 = 150 \sin\left(\omega t + \frac{\pi}{6}\right)$$

$$v_4 = 200 \sin\left(\omega t - \frac{\pi}{4}\right)$$

Find the total potential difference (pd) and express the answer in similar form. What will be the resultant pd if the polarity of v_2 is reversed.

Solution

Writing the standard sinusoidal forms of the given instantaneous voltages,

$$v_1 = 100 \sin \omega t$$

$$v_2 = 250 \sin\left(\omega t + \frac{\pi}{2}\right)$$

$$v_3 = 150 \sin\left(\omega t + \frac{\pi}{6}\right)$$

$$v_4 = 200 \sin\left(\omega t - \frac{\pi}{4}\right)$$

Converting the standard sinusoidal forms into polar forms,

$$\bar{V}_1 = (70.71 \angle 0)\ \text{V}$$

$$\bar{V}_2 = (176.78 \angle 90)\ \text{V}$$

$$\bar{V}_3 = (106.07 \angle 30)\ \text{V}$$

$$\bar{V}_4 = (141.42 \angle -45)\ \text{V}$$

Let the total potential difference (pd) is V volt.

So, $\bar{V} = \bar{V}_1 + \bar{V}_2 + \bar{V}_3 + \bar{V}_4$

or $\bar{V} = (70.71 \angle 0) + (176.78 \angle 90) + (106.07 \angle 30) + (141.42 \angle -45)$

or $\bar{V} = (70.71 + j0) + (0 + j176.78) + (91.86 + j53.04) + (100 - j100)$

or $\bar{V} = (262.57 + j129.82)\ \text{V}$

or $\bar{V} = (292.91 \angle 26.31)\ \text{V}$

Converting into standard sinusoidal form,

$$v = 414.24 \sin(\omega t + 26.31)$$

It polarity of v_2 is reversed, the total pd (V) can be calculated as

$$\bar{V} = \bar{V}_1 - \bar{V}_2 + \bar{V}_3 + \bar{V}_4$$

or $\bar{V} = (70.71 \angle 0) - (176.78 \angle 90) + (106.07 \angle 30) + (141.42 \angle -45)$

or $\bar{V} = (70.71 + j0) - (0 + j176.78) + (91.86 + j53.04) + (100 - j100)$

or $\bar{V} = (262.57 - j223.74)\ \text{V}$

or $\bar{V} = (344.97 \angle -40.43)\ \text{V}$

Converting into standard sinusoidal form,

$$v = 487.86 \sin(\omega t - 40.43)$$

2.1.12 Fundamental AC Circuits

The closed path followed by an alternating current is known as **ac circuit**. When a sinusoidal alternating voltage is applied in a circuit, the resultant alternating current is also sinusoidal and has same frequency as that of the applied voltage. However, there is generally a phase difference between the applied voltage and the resulting current. In other words, when the applied voltage is maximum in the positive direction, the resultant current may not be maximum. As we shall see, the phase difference is introduced due to the presence of inductance (L) and capacitance (C) in the circuit. The resistance, inductance, and capacitance are the three basic elements of any electrical network. In order to analyse any ac electric circuit, it is necessary to understand the following three cases:

1. AC through pure resistance
2. AC through pure inductance
3. AC through pure capacitance

In each case, it is assumed that a purely sinusoidal alternating voltage given by the equation $v = V_m \sin \omega t$ is applied to the circuit. The equations of the current, power, and phase shift are developed in each case. The voltage applied having zero phase angle is assumed reference while plotting phasor diagram in each case.

AC Circuit Containing Resistance Only (Resistive Circuit)

Consider a circuit containing a pure resistance of $R\ \Omega$ connected across the alternating voltage source (see Fig. 2.44).

Let the alternating voltage be given by the equation

$$\boxed{v = V_m \sin \omega t} \qquad (2.3)$$

As a result of this voltage, an alternating current i will flow in the circuit. According to Ohm's law, we can find the equation of current i as

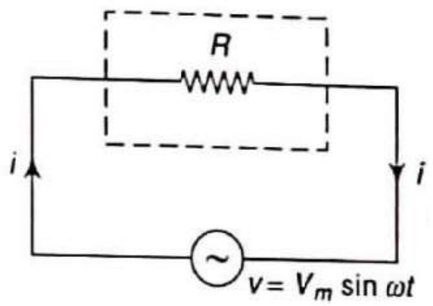

Fig. 2.44 Resistive AC circuit

$$i = \frac{v}{R}$$

Substituting the value of v, we get

$$i = \frac{V_m}{R} \sin \omega t \qquad (2.4)$$

The value of i will be maximum (i.e., I_m) when $\sin \omega t = 1$.

So, $I_m = \dfrac{V_m}{R}$

Thus, Eq. (2.4) becomes $\boxed{i = I_m \sin \omega t}$ (2.5)

Phase angle From Eqs (2.3) and (2.5), it is clear that the applied voltage and the circuit current are in phase with each other. Therefore, nature of the circuit is resistive. The waveforms of voltage and current and the corresponding phasor diagram are shown in Figs 2.45(a) and (b).

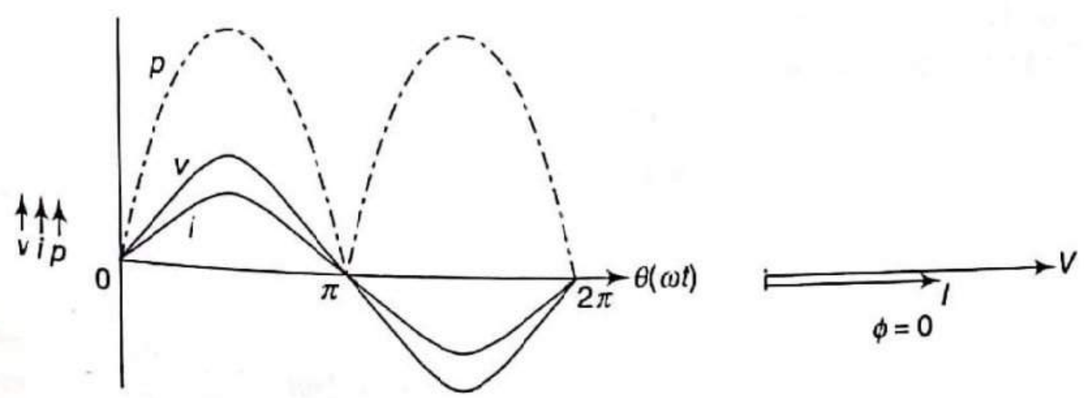

(a) Waveforms (b) Phasor diagram

Fig. 2.45 Voltage and current in phase with each other

In the phasor diagram, the phasors are drawn in phase and there is no phase difference. The angle between voltage across the circuit and current through the circuit is known as phase angle of the circuit. So, in this case

Phase angle of the circuit, $\phi = 0$

Hence, power factor of the circuit, pf = cos ϕ = 1 (unity)

Opposition to current (Z) In general, opposition offered by circuit elements to the current flow is called impedance (Z). The impedance of the circuit can be calculated as

$$\frac{V}{I} = Z \qquad \text{(by Ohm's law)}$$

We have seen that in resistive circuit,

$$I_m = \frac{V_m}{R}$$

or $$\frac{V_m}{I_m} = R$$

Dividing both numerator and denominator by $\sqrt{2}$, we get

$$\frac{\frac{V_m}{\sqrt{2}}}{\frac{I_m}{\sqrt{2}}} = R$$

or $$\frac{V}{I} = R$$

Thus, $Z = R\,\Omega$

Power (P) In any circuit, electric power consumed at any instant is the product of voltage and current at that instant, i.e.,

$$p = v \times i$$

In the above equation, voltage and current are varying sinusoidally. Therefore, power is also varying w.r.t. time.

Instantaneous power, $p = v \times i$

$$= (V_m \sin \omega t)\,(I_m \sin \omega t)$$

$$= V_m I_m \sin^2 \omega t$$

$$= V_m I_m \left(\frac{1 - \cos 2\omega t}{2}\right)$$

$$= \frac{V_m I_m}{2} - \frac{V_m I_m}{2} \cos 2\omega t$$

Since power is a scalar quantity, average power over a complete cycle is to be considered. So, we have

$$\text{Power consumed, } P = \frac{1}{2\pi}\int_0^{2\pi} p\, d\omega t$$

$$= \frac{1}{2\pi}\int_0^{2\pi}\left[\frac{V_m I_m}{2} - \frac{V_m I_m}{2}\cos 2\omega t\right] d\omega t$$

$$= \frac{1}{2\pi}\int_0^{2\pi}\frac{V_m I_m}{2}\, d\omega t - \frac{1}{2\pi}\int_0^{2\pi}\frac{V_m I_m}{2}\cos 2\omega t\, d\omega t$$

$$= \frac{V_m I_m}{2\pi \times 2}[\omega t]_0^{2\pi} - \frac{V_m I_m}{2\pi \times 2}[\sin 2\omega t]_0^{2\pi}$$

$$= \frac{V_m I_m}{2\pi \times 2}[2\pi - 0] - \frac{V_m I_m}{2\pi \times 2}[0 - 0]$$

$$= \frac{V_m I_m}{2} - 0$$

$$= \frac{V_m}{\sqrt{2}} \times \frac{I_m}{\sqrt{2}}$$

So, $P = VI$

where V = rms value of the applied voltage

I = rms value of the circuit current

AC Circuit Containing Pure Inductance Only (Pure Inductive Circuit)

Consider a circuit containing a pure inductance of L henry as shown in Fig. 2.46.

An alternating voltage is applied to a pure inductance. Let the equation of the applied voltage be

$$\boxed{v = V_m \sin \omega t} \qquad (2.6)$$

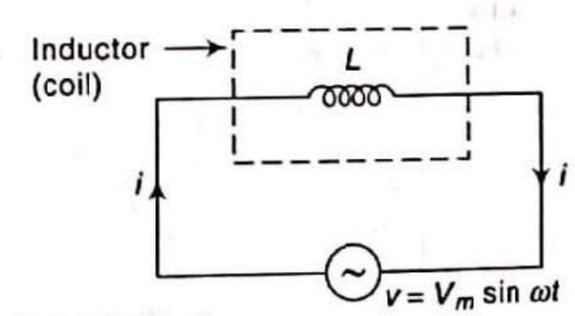

Fig. 2.46 Pure inductive circuit

As a result of this voltage, an alternating current 'i' flows through the inductance L. The alternating current sets up an alternating magnetic field around the inductance. This changing flux links the coil and an emf is induced in it, called self- induced emf (=Ldi/dt). This emf opposes the applied voltage. At any instant, self-induced emf is equal and opposite to the applied voltage.

So, $$v = L\frac{di}{dt}$$

or $$Ldi = vdt$$

or $$Ldi = V_m \sin \omega t\, dt \qquad (\because v = V_m \sin \omega t)$$

or $$di = \frac{V_m}{L}\sin \omega t\, dt$$

Integrating both sides, we get

$$i = \frac{V_m}{L}\int \sin \omega t\, dt$$

$$i = \frac{V_m}{\omega L}(-\cos \omega t)$$

$$i = \frac{V_m}{\omega L}\sin\left(\omega t - \frac{\pi}{2}\right) \tag{2.7}$$

The value of i will be maximum (i.e., I_m) when $\sin\left(\omega t - \frac{\pi}{2}\right) = 1$.

So, $I_m = \frac{V_m}{\omega L}$

Substituting the value of $\frac{V_m}{\omega L} = I_m$ in Eq. (2.7), we get

$$\boxed{i = I_m \sin\left(\omega t - \frac{\pi}{2}\right)} \tag{2.8}$$

Phase angle and power factor From Eqs (2.6) and (2.8), it is clear that the current lags behind the voltage by $\pi/2$ rad or 90°. Hence, the nature of the circuit is pure inductive. The waveforms of voltage and current and the corresponding phasor diagram are shown in Figs 2.47(a) and (b).

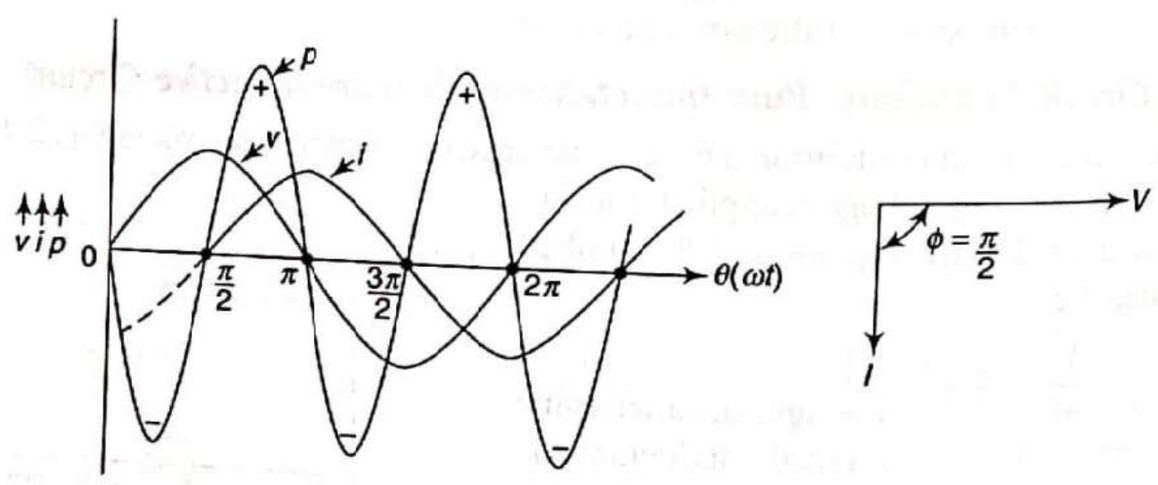

(a) Waveforms (b) Phasor diagram

Fig. 2.47 Current lagging behind voltage by 90°

Thus,

Phase angle of the circuit, $\phi = 90°$

Hence, power factor of the circuit, pf = cos ϕ = cos 90° = 0 lagging

Note: Power factor has magnitude and nature. Magnitude of the power factor equals to cos ϕ. The nature of the power factor is same as nature of current. In this case, circuit current lags to the applied voltage, therefore nature of the power factor is lagging.

Opposition to current (Z) We have seen that

$$I_m = \frac{V_m}{\omega L}$$

or $\frac{V_m}{I_m} = \omega L$

Dividing both numerator and denominator by $\sqrt{2}$,

$$\frac{\frac{V_m}{\sqrt{2}}}{\frac{I_m}{\sqrt{2}}} = \omega L$$

So, $\frac{V}{I} = \omega L$

or $Z = \omega L\ \Omega$

Thus, opposition offered by inductance to current flow is ωL. This quantity ωL is called inductive reactance X_L of the coil.

So, $X_L = \omega L\ \Omega$

or $X_L = 2\pi f L\ \Omega$

Note: There are two reactive elements: inductor and capacitor. The opposition offered by the reactive element to current flow is called reactance (denoted by X). Thus, the opposition offered by inductor to current flow is called inductive reactance (denoted by X_L), and the opposition offered by capacitor to current flow is called capacitive reactance (denoted by X_C).

Power Instantaneous power,

$$p = vi$$

$$= V_m \sin \omega t \times I_m \sin\left(\omega t - \frac{\pi}{2}\right)$$

$$= -V_m I_m \sin \omega t \cos \omega t$$

$$= -\frac{V_m I_m}{2}\sin 2\omega t$$

Since power is a scalar quantity, average power over a complete cycle is to be considered.

So, Average power, P = Average of p over one cycle

or $$P = \frac{1}{2\pi}\int_0^{2\pi} p\, d\omega t$$

or $$P = \frac{1}{2\pi}\int_0^{2\pi} -\frac{V_m I_m}{2}\sin 2\omega t\, d\omega t$$

or $P = 0$

Hence, power absorbed in pure inductance is zero.

Figure 2.47(a) shows the power curve. During the first 90° of the cycle, the voltage is +ve and the current is –ve. Therefore, the power supplied is negative. It

means power is flowing from the inductor to the source. During the next 90° of the cycle, both voltage and current are positive and the power supplied is positive. Therefore, power flows from the source to the inductor. Similarly, for the next 90° of the cycle, power flows from the inductor to the source and during the last 90° of the cycle, power flows from the source to the inductor. An examination of the power curve over one cycle shows that positive power is equal to the negative power. Hence the resultant power over one cycle is zero, i.e., pure inductance consumes no power. When current rises in an inductor, energy is required to build up magnetic field around the inductor. This energy is supplied from the source and is stored in the magnetic field of the inductor. As the current falls, the collapsing magnetic field returns the stored energy to the source. In Fig. 2.47(a), when power is positive; energy is being put into the circuit to build up the magnetic field around the inductor. And when the power is negative, the magnetic energy is being returned to the source. Since power supplied is equal to power returned (positive areas being equal to the negative areas) over one cycle, the net power absorbed by the inductor is zero. In this case power circulates in the circuit. The circulating power is called as reactive power. The power actually consumed in the circuit is called as active power.

AC Circuit Containing Pure Capacitance Only (Pure Capacitive Circuit)

Consider an alternating voltage applied to a capacitor of capacitance C F as shown in Fig. 2.48. Let the equation of the applied alternating voltage be

$$\boxed{v = V_m \sin \omega t} \tag{2.9}$$

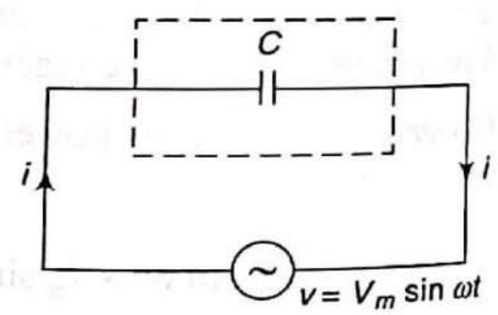

Fig. 2.48 Pure capacitive circuit

As a result of this alternating voltage, alternating current will flow through the circuit. Let at any instant, i is the current and q is the charge on the plates.

Charge on capacitor, $q = Cv$

So, Circuit current, $i = \dfrac{dq}{dt}$

$$= \frac{dCv}{dt}$$

$$= \frac{d}{dt}(C\,V_m \sin \omega t)$$

$$= \omega C\,V_m \cos \omega t$$

or $$i = \omega C V_m \sin\left(\omega t + \frac{\pi}{2}\right) \tag{2.10}$$

The value of i will be maximum (i.e., I_m) when $\sin\left(\omega t + \dfrac{\pi}{2}\right)$ is unity.

So, $I_m = \omega C V_m$

Substituting the value $\omega C V_m = I_m$ in Eq. (2.10), we get

$$\boxed{i = I_m \sin\left(\omega t + \frac{\pi}{2}\right)} \tag{2.11}$$

Phase angle and power factor From Eqs (2.9) and (2.11), it is clear that the current leads the voltage by $\pi/2$ rad or 90°. Hence, in a pure capacitance, the current leads the voltage by 90°. The nature of the circuit is said to be pure capacitive. The waveforms of voltage and current and the corresponding phasor diagram are shown in Figs 2.49(a) and (b).

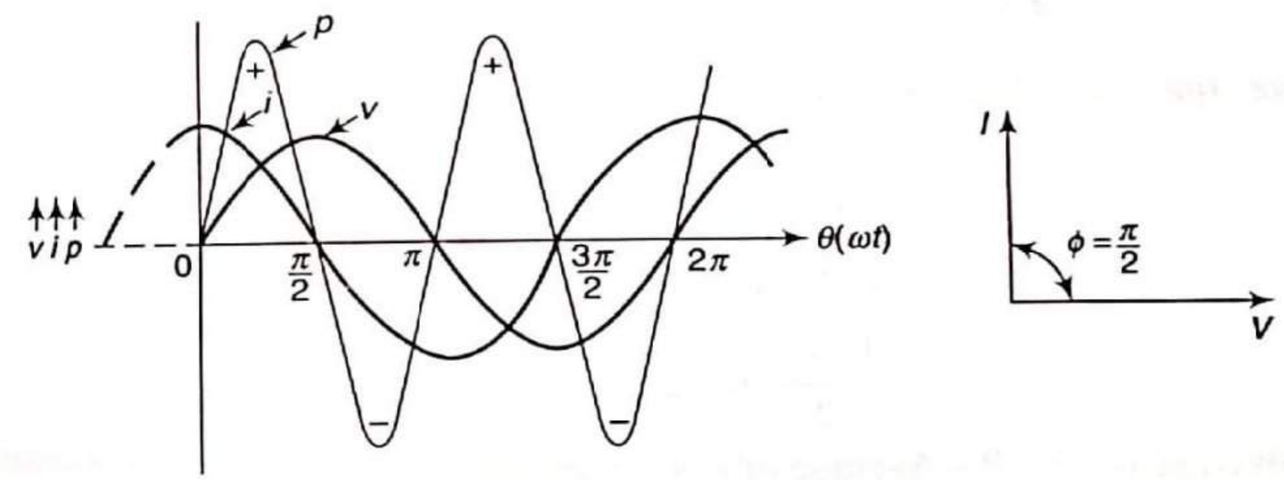

(a) Waveforms (b) Phasor diagram

Fig. 2.49 Current leads voltage by 90°

Thus, Phase angle of the circuit, $\phi = 90°$

So, power factor of the circuit, pf = $\cos\phi = \cos 90° = 0$ leading

Opposition to current (Z) We have seen that

$$I_m = \omega C V_m$$

or $$\frac{V_m}{I_m} = \frac{1}{\omega C}$$

Dividing both numerator and denominator by $\sqrt{2}$,

$$\frac{\dfrac{V_m}{\sqrt{2}}}{\dfrac{I_m}{\sqrt{2}}} = \frac{1}{\omega C}$$

So, $$\frac{V}{I} = \frac{1}{\omega C}$$

or $$Z = \frac{1}{\omega C}\ \Omega$$

Thus, opposition offered by capacitance to current flow is $\frac{1}{\omega C}$. This quantity $\frac{1}{\omega C}$ is called capacitive reactance X_C of the capacitor.

So, $X_C = \frac{1}{\omega C}\,\Omega$

So, $X_C = \frac{1}{2\pi fC}\,\Omega$

Power (p) Instantaneous power, $p = vi$

$$= V_m \sin \omega t \times I_m \sin\left(\omega t + \frac{\pi}{2}\right)$$

$$= V_m I_m \sin \omega t \cos \omega t$$

$$= \frac{V_m I_m}{2} \sin 2\omega t$$

So, Average power, P = Average of p over one cycle

or $$P = \frac{1}{2\pi}\int_0^{2\pi} p\, d\omega t$$

or $$P = \frac{1}{2\pi}\int_0^{2\pi}\left[\frac{V_m I_m}{2}\sin 2\omega t\right] d\omega t$$

or $P = 0$

Hence, power absorbed in a pure capacitance is zero.

Figure 2.49(a) shows the power curve. The power curve is similar to that for a pure inductor because now the current leads the voltage by 90°. It is clear that positive power is equal to the negative power over one cycle. Hence, the net power absorbed in a capacitor is zero. When voltage rises across the plates of a capacitor, energy is required to build up electrostatic field between the plates of the capacitor. This energy is supplied from the source and is stored in the capacitor in the form of electrostatic field energy. As the voltage falls, the collapsing electrostatic field returns the stored energy to the source. Since the power supplied is equal to the power returned (positive areas being equal to the negative areas) over one cycle, the net power absorbed in a capacitor is zero.

Example 2.26 A 318 μF capacitor is connected across a 230 V, 50 Hz system. Determine (i) capacitive reactance, (ii) rms value of current, and (iii) equations for voltage and current.

Solution

(i) Capacitive reactance, $X_C = \frac{1}{2\pi fC} = \frac{1}{2\pi \times 50 \times 318 \times 10^{-6}} = 10\ \Omega$

(ii) The rms value of current, $I = \frac{V}{Z} = \frac{V}{X_C} = \frac{230}{10} = 23$ A

(iii) $V_m = \sqrt{2} \times V$

$= \sqrt{2} \times 230$

$= 325.27$ V

and $I_m = \sqrt{2} \times I$

$= \sqrt{2} \times 23$

$= 32.53$ A

Hence, equations for voltage and current are:

$v = 325.27 \sin (2\pi \times 50)t$

$v = 325.27 \sin 314t$

$i = 32.53 \sin\left(314t + \frac{\pi}{2}\right)$

Example 2.27 A 10 mH inductor has a current of $i = 5 \cos (2000t)$ A. Obtain the voltage V_L across it.

Solution

Given $L = 10 \times 10^{-3}$ H

and $i = 5 \cos (2000t)$

Converting the current equation into standard sinusoidal form,

$$i = 5 \sin\left(2000t + \frac{\pi}{2}\right) \quad \text{(i)}$$

From Eq. (i), $\omega = 2000$ rad/sec and $\phi = \frac{\pi}{2}$ rad = 90°

The rms value of current, $I = \frac{5}{\sqrt{2}} = 3.54$ A

Now, $X_L = \omega L = 2000 \times 10 \times 10^{-3} = 20\ \Omega$

So, $V_L = IX_L = 3.54 \times 20 = 70.8$ V

Alternative method:

The equation of the voltage across the inductor (v_L) can be calculated as

$$v_L = L\frac{di}{dt}$$

$$= 10 \times 10^{-3}\frac{d}{dt}[5 \cos (2000t)]$$

$$= -10 \times 10^{-3} \times 5 \times 2000 \sin 2000t$$

or $\quad v_L = 100 \sin (2000t + 180°)$

Comparing with standard sinusoidal form,

$$V_m = 100 \text{ V}$$

So, $\quad V_L = \dfrac{100}{\sqrt{2}} = 70.71 \text{ V}$

Example 2.28 A voltage of 150 V, 50 Hz is applied to a coil of negligible resistance and inductance 0.2 H. Write the time equation for voltage and current.

Solution

Given: $V = 150$ V

So, $\quad V_{max} = \sqrt{2}\ \text{V} = \sqrt{2} \times 150 = 212.13$ V

Supply frequency, $f = 50$ Hz

Inductance, $L = 0.2$ H

Inductive reactance, $X_L = 2\pi fL = 2\pi \times 50 \times 0.2 = 62.83\ \Omega$

In a pure inductive coil,

if applied voltage, $v = V_m \sin \omega t$,

then $\quad i = I_m \sin\left(\omega t - \dfrac{\pi}{2}\right)$

The rms value of current, $I = \dfrac{V}{X_L} = \dfrac{150}{62.83} = 2.39$ A

So, $\quad I_m = \sqrt{2}\, I = \sqrt{2} \times 2.39 = 3.38$ A

Now, $\quad v = 212.13 \sin \omega t$

or $\quad v = 212.13 \sin 2\pi ft$

Hence, $\quad v = 212.13 \sin 314t$

and $\quad i = 3.38 \sin\left(314t - \dfrac{\pi}{2}\right)$

EXERCISES 2.1

1. What is the difference between a dc waveform and an alternating waveform?
2. Why is sinusoidal waveform preferred over other alternating waveforms?
3. Explain the generation of sinusoidal alternating voltage.
4. Define the following terms related with alternating quantity:
   (i) Instantaneous value
   (ii) Cycle
   (iii) Time period
   (iv) Frequency
   (v) Waveform
   (vi) Amplitude
5. Define rms value of an ac quantity.
6. Define 'form factor'. What is the form factor for full-wave rectified and half-wave rectified sine wave?
7. What is the concept of phasor in ac circuits?
8. Explain the behaviour of alternating current through pure inductor. Show that the average power consumed in pure inductive circuit is zero.
9. Explain the behaviour of alternating current through pure capacitor. Show that the average power consumed in pure capacitive circuit is zero.
10. An alternating voltage is represented by $v = 141.4 \sin 377t$. Find (i) maximum value, (ii) frequency, (iii) time period, and (iv) instantaneous value of voltage when t is 3 msec.
    [*Ans.* (i) 141.4 V, (ii) 60 Hz, (iii) 16.67 ms, (iv) 127.8 V]
11. An alternating current takes 3.375 msec to reach 15 A for the first time after becoming instantaneously zero. The frequency of current is 40 Hz. Find the maximum value of alternating current. [*Ans.* 20 A]
12. An alternating voltage of time period 0.02 sec has maximum value of 12 V. Write the equation for its instantaneous value. Calculate the instantaneous value of the voltage after time 0.002 sec, where reference is taken from the instant of zero voltage and is becoming positive. Also calculate the time required for the voltage to reach 4 V for the first time.
    [*Ans.* 12 sin (100 πt); 7.053 V; 1.0817 msec]
13. An alternating current varying sinusoidally at 50 Hz has its rms value of 10 A. Write down an equation for instantaneous value of current. Find the value of current at:
    (i) 2.5 ms after passing through positive maximum value.
    (ii) 7.5 ms after passing through zero value and increasing negatively.
    [*Ans.* $i = 14.14 \sin(100\pi t)$; 10 A; –10 A]
14. A sinusoidal alternating current of 25 Hz frequency has its maximum value of 100 A. How long will it take for the current to attain values of 20 A and 50 A, starting from zero value?
    [*Ans.* 1.28 ms; 3.33ms]
15. Find (i) rms value and (ii) form factor for a symmetrical triangular wave form shown in Fig. 2.50. [*Ans.* 5.77 V; 1.154]

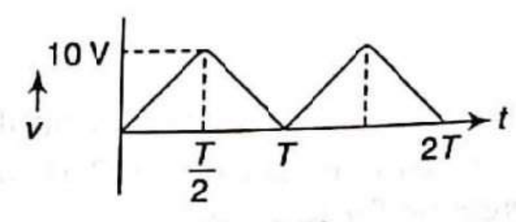

Fig. 2.50

16. A full rectified wave is clipped at 70.7% of its maximum value as shown in Fig. 2.51. Find its average and rms value.
    [*Ans.* 0.54 V_m; 0.584 V_m]

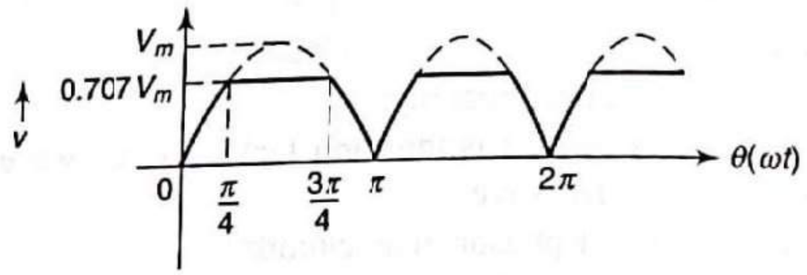

Fig. 2.51

17. Find the average and rms values of the current given by $i(t) = 10 + 10 \sin \theta$.
[*Ans.* 10 A; 12.247 A]

18. Find the average and effective values of the voltage wave shown in Fig. 2.52.

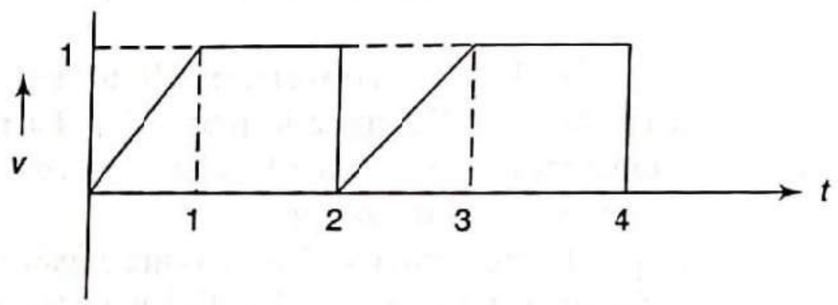

Fig. 2.52

[*Ans.* 0.75 V; 0.816 V]

19. Two currents are represented by $i_1 = 15 \sin\left(\omega t + \frac{\pi}{3}\right)$ and $i_2 = 25 \sin\left(\omega t + \frac{\pi}{4}\right)$. These currents are fed into a common conductor. Find the total current in the form $i = I_m \sin(\omega t + \phi)$. If the conductor has a resistance of 10 Ω, what will be the energy loss in 24 h.
[*Ans.* $i = 39.68 \sin(\omega t + 50.63)$; 6.8×10^8 J]

20. Three sinusoidal voltages acting in series are given by: $v_1 = 10 \sin 440t$, $v_2 = 10\sqrt{2} \sin(440t - 45)$, $v_3 = 20 \cos 440t$. Derive an expression for the resultant voltage and determine frequency and rms value of the resultant voltage. [*Ans.* $v = 22.36 \sin(440t + 26.57)$; 70.03 Hz; 15.81 V]

21. Two voltage sources have equal emf's and a phase difference α. When they are connected in series, the voltage is 200 V. When one source is reversed, the voltage is 15 V. Find their emf's and phase angle α.
[*Ans.* 100.28 V; 8.58°]

22. A 50 Hz, alternating voltage of 150 V is applied independently to (i) resistance of 10 Ω, (ii) inductance of 0.2 H, and (iii) capacitance of 50 μF. Find the expression for the instantaneous current in each case.

$$\left[\textit{Ans.}\ 21.213 \sin(100\pi t);\ 3.38 \sin\left(100\pi t - \frac{\pi}{2}\right);\ 3.33 \sin\left(100\pi t + \frac{\pi}{2}\right)\right]$$

23. Find the current flowing through a purely inductive circuit containing a voltage source $v = 325 \sin(100\pi t)$ and an inductance, $L = 2$ H.
[*Ans.* $I = 0.366$ A]

24. Find the current flowing through a purely capacitive circuit containing a voltage source $v = 230$ V, 50 Hz, and a capacitor of 1000 μF.

25. A capacitor of 280 μF is connected to a single phase ac circuit acros 230 V, having frequency 50 Hz. Find (a) capacitive reactance, (b) current, and (c) equations of current and voltage.

$$\left[\textit{Ans.}\ 11.368\ \Omega,\ 20.232\ \text{A},\ i = 28.612 \sin\left(100\pi t + \frac{\pi}{2}\right);\ v = 325.27 \sin(100\pi t)\right]$$

2.2 AC Series Circuits

An ac circuit differs from a dc circuit in many respects. Firstly, in a dc circuit, we consider resistance only, whereas in an ac circuit, in addition to resistance, inductance (L) and capacitance (C) are also considered. The elements L and C offer opposition (i.e., X_L and X_C) to the current flow in an ac circuit. Secondly, the magnitude of the current in an ac circuit is affected by the supply frequency because X_L ($=2\pi fL$) and X_C [$= 1/(2\pi fC)$] are frequency dependent. Thirdly, in a dc circuit, voltages or currents can be added or subtracted arithmatically. But in an ac circuit, there is a phase difference of 90° between the voltage across and the current through L or C. This implies that for the addition or subtraction of alternating voltages or currents, phase difference has to be taken into account. All these features make the analysis of an ac circuit quite different from that of dc circuit.

A circuit in which the same alternating current flows through all the elements (i.e., R, L, C) is called series ac circuit. Here, we will discuss the following series circuits:

1. R-L series circuit
2. R-C series circuit
3. R-L-C series circuit

In the study of the above circuits, our points of interest will be (i) phase angle ϕ between the applied voltage and the circuit current, (ii) nature of the circuit (i.e., whether resistive, inductive, or capacitive), (iii) circuit impedance, and (iv) power consumed. In drawing the phasor diagram, either voltage or current can be taken as the reference phasor to show the phase difference. However, it is always convenient to take that quantity as the reference phasor, which is common in the circuit. Since current is common in a series circuit, it shall be taken as the reference phasor in drawing the phasor diagrams.

2.2.1 *R-L* Series Circuit

Consider a resistor of $R\ \Omega$, and an inductance of L H connected in series across an ac supply (see Fig. 2.53).

Let V = rms value of the applied voltage
I = rms value of the circuit current
Z = impedance of the circuit

By Ohm's law, $V_R = IR$ where V_R is in phase with I
$V_L = IX_L$ where V_L leads I by 90°
$V = IZ$

Circuit diagram

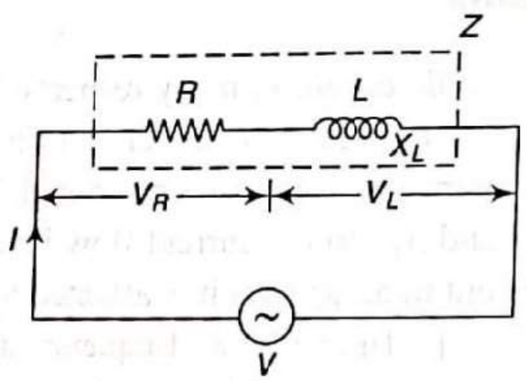

Fig. 2.53 *R-L* series circuit

Phasor diagram

Taking current as the reference phasor, the phasor diagram of the circuit can be drawn as shown in Fig. 2.54(a). The voltage V_R is in phase with current I, whereas the voltage V_L leads current I by 90°.

From the circuit diagram, we get the voltage equation as

$$\bar{V} = \bar{V}_R + \bar{V}_L$$

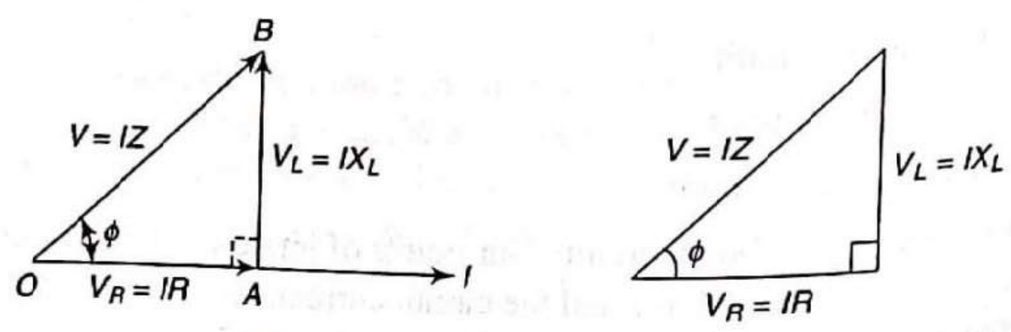

(a) Phasor diagram (b) Voltage triangle

Fig. 2.54

Note: Phasor diagram can be drawn by using the following steps:

Step I: Write the voltage equation, i.e., $\bar{V} = \bar{V}_R + \bar{V}_L$ from the circuit diagram. According to the voltage equation, to get the supply voltage phasor 'V', we have to take the phasor sum of V_R and V_L.

Step II: Draw the reference phasor, i.e., 'I' from the starting point 'O'.

Step III: Draw 'V_R' from the starting point 'O', which is in phase with 'I'.

Step IV: After phasor 'V_R' place the phasor V_L. Phasor 'V_L' leads 90° to I. Let the finishing terminal be 'B'.

Step V: To get the resultant phasor 'V', join the starting terminal, i.e., 'O' and finishing terminal, i.e., 'B', and put the arrow at finishing terminal.

Step VI: Mark the angle between circuit current 'I' and supply voltage 'V' as $\phi°$ (ϕ is called phase angle of the circuit).

It is clear from the phasor diagram that circuit current I lags behind the applied voltage V by $\phi°$ ($\phi < 90°$). Therefore, nature of the circuit is inductive. The value of phase angle ϕ can be determined from the phasor diagram.

$$\text{Phase angle of the circuit, } \phi = \tan^{-1}\frac{V_L}{V_R} = \tan^{-1}\frac{X_L}{R}$$

$$\text{Hence, power factor of the circuit, pf} = \cos\phi = \frac{V_R}{V} = \frac{IR}{IZ} = \frac{R}{Z} \text{ lagging}$$

(As the circuit current I lags behind the applied voltage V, the nature of the power factor is lagging.)

Impedance (Z)

The total opposition offered to the flow of alternating current is called impedance Z. The voltage triangle of the circuit is shown in Fig. 2.54(b). The impedance has two components, resistance (R) and reactance (X_L). The impedance along with its components can be represented by a right-angled triangle known as impedance triangle. Dividing each of the voltage phasor by I in a voltage triangle, we get the impedance triangle as shown in Fig. 2.55.

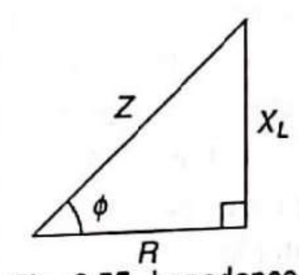

Fig. 2.55 Impedance triangle

From impedance triangle, impedance $Z = \sqrt{R^2 + X_L^2}\ \Omega$

The impedance Z can be expressed in rectangular and polar forms as

$$\bar{Z} = (R + jX_L)\ \Omega$$

and $$\bar{Z} = (Z\angle\phi)\ \Omega$$

Power (P)

The purpose of passing the current through any circuit is to transfer the power from one place to another. The power that is actually consumed in the circuit is called active or true power (in case of resistance R). The circulating power is called reactive power (in case of inductance L or capacitance C). In case of resistance, current is in phase with voltage, while in case of inductance and capacitance, current is 90° out of phase with voltage. Thus, the current in phase

with voltage produces the active power, while current 90° out of phase with voltage produces the reactive power, i.e.,

Active power, P = Voltage × Current in phase with voltage
Reactive power, Q = Voltage × Current 90° out of phase with voltage

For R-L series circuit,
Taking V as reference phasor, the phasor diagram can be drawn as shown in Fig. 2.56 (only voltage phasor and current phasor are drawn).

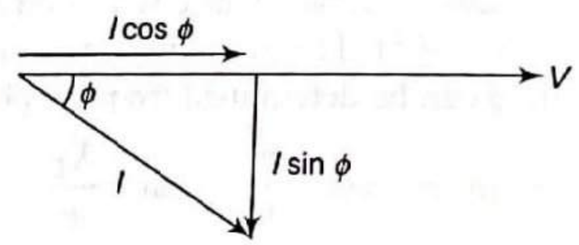

Fig. 2.56 Phasor diagram (taking V-reference)

The circuit current I can be resolved into two components:
(i) $I\cos\phi$, in phase with voltage
(ii) $I\sin\phi$, 90° out of phase with voltage

Thus, Active power, $P = VI\cos\phi$ W or kW
Reactive power, $Q = VI\sin\phi$ VAR or kVAR
and Apparent power, $S = VI$ VA or kVA

In Fig. 2.56, if we multiply each of current phasor by V, we get the power triangle as shown in Fig. 2.57.

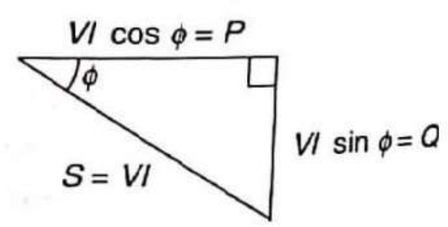

Fig. 2.57 Power triangle

From power triangle,
(Active power)^2 + (Reactive power)^2
= (Apparent power)^2
i.e., $P^2 + Q^2 = S^2$

2.2.2 *R-C* Series Circuit

Consider a resistor of $R\ \Omega$ and a capacitor of capacitance C F are connected in series across an ac supply (see Fig. 2.58).

Let V = rms value of the applied voltage
I = rms value of the circuit current
Z = impedance of the circuit

By Ohm's law,

$V_R = IR$ where V_R is in phase with I
$V_C = IX_C$ where V_C lags behind I by 90°
$V = IZ$

Circuit diagram

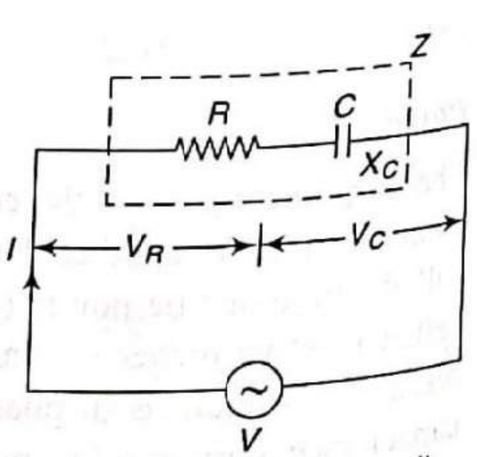

Fig. 2.58 *R-C* series circuit

Phasor diagram

Taking current as the reference phasor, the phasor diagram of the circuit can be drawn as shown in Fig. 2.59(a). Voltage V_R is in phase with current I, whereas voltage V_C lags behind current I by 90°.

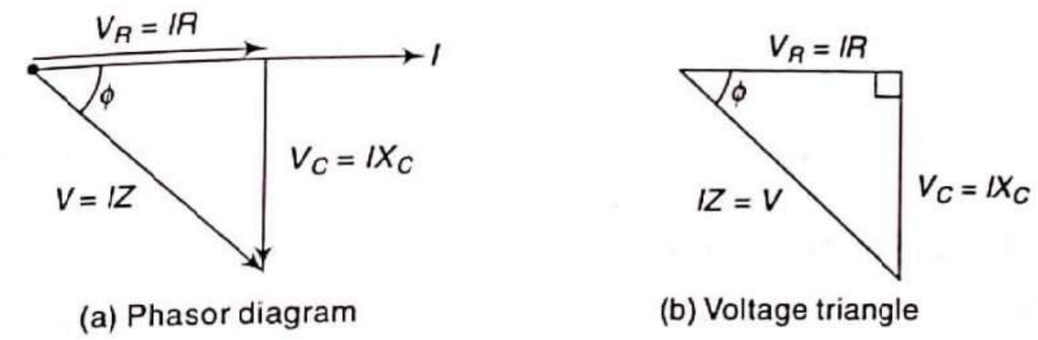

(a) Phasor diagram (b) Voltage triangle

Fig. 2.59

From the circuit diagram, we get the voltage equation as $\bar{V} = \bar{V}_R + \bar{V}_C$
It is clear from the phasor diagram that current I leads the applied voltage V by $\phi°$ ($\phi < 90$). Therefore, nature of the circuit is capacitive. The value of the phase angle ϕ can be determined from the phasor diagram.

Phase angle of the circuit, $\phi = \tan^{-1}\dfrac{V_C}{V_R} = \tan^{-1}\dfrac{X_C}{R}$

Hence, power factor of the circuit, pf $= \cos\phi = \dfrac{V_R}{V} = \dfrac{IR}{IZ} = \dfrac{R}{Z}$ leading

(As the circuit current 'I' leads the applied voltage 'V', the nature of the power factor is leading.)

Impedance (Z)

The voltage triangle of the circuit is shown in Fig. 2.59(b). Dividing each of voltage phasor by 'I' in a voltage triangle, we get the impedance triangle as shown in Fig. 2.60.

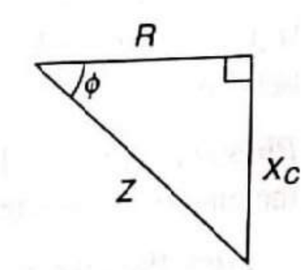

Fig. 2.60 Impedance triangle

From impedance triangle,
Circuit impedance, $Z = \sqrt{R^2 + X_C^2}\ \Omega$
The impedance can be expressed in rectangular and polar forms as

$\bar{Z} = (R - jX_C)\ \Omega$
and $\bar{Z} = (Z\angle -\phi)\ \Omega$

Power (P)

For R-C series circuit, taking V as reference, the phasor diagram can be drawn as shown in Fig. 2.61 (only voltage phasor and current phasor are drawn).

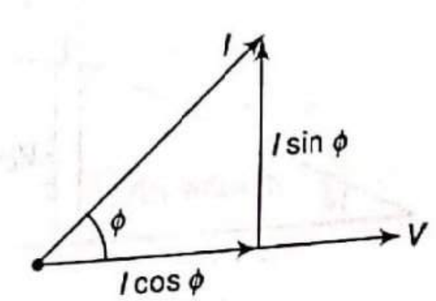

Fig. 2.61 Phasor diagram (taking V-reference)

The circuit current can be resolved into two components:
(i) $I\cos\phi$, is in phase with voltage
(ii) $I\sin\phi$, 90° out of phase with voltage

In Fig. 2.61, if we multiply each of current phasor by V, we get the power triangle as shown in Fig. 2.62.

From power triangle,

(Apparent power)^2 = (Active power)^2 + (Reactive power)^2

i.e., $P^2 + Q^2 = S^2$

So, $\text{pf} = \cos\phi = \dfrac{P}{S}$

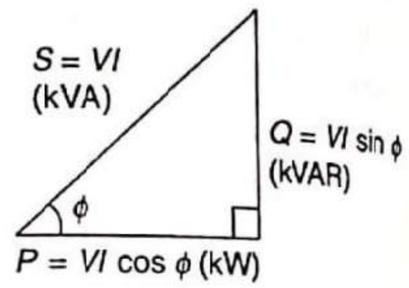

Fig. 2.62 Power triangle

2.2.3 *R-L-C* Series Circuit

Consider an ac circuit containing a resistor of resistance R ohm, inductor of inductance L henry, and a capacitor of capacitance C farad, all connected in series across an ac supply (see Fig. 2.63).

Let V = rms value of the applied voltage

I = rms value of the circuit current

Z = impedance of the circuit

By Ohm's law,

$V_R = IR$, where V_R is in phase with I

$V_L = IX_L$, where V_L leads I by 90°

$V_C = IX_C$, where V_C lags behind I by 90°

$V = IZ$

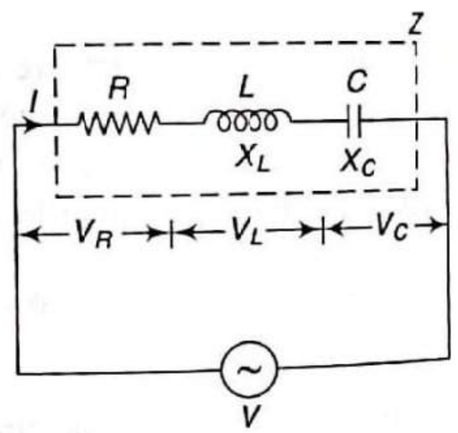

Fig. 2.63 *R-L-C* series circuit

Figure 2.63 shows the *R-L-C* series circuit. The *R-L-C* series circuit can be effectively inductive, capacitive, or resistive depending upon the values of X_L and X_C.

Case (i) $X_L > X_C$

If $X_L > X_C$, then $V_L > V_C$. The capacitive effect gets neutralized and the circuit behaves like a *R-L* circuit.

Phasor diagram Taking current as the reference phasor, the phasor diagram of the circuit can be drawn as shown in Fig. 2.64(a).

From the circuit diagram, $\bar{V} = \bar{V}_R + \bar{V}_L + \bar{V}_C$

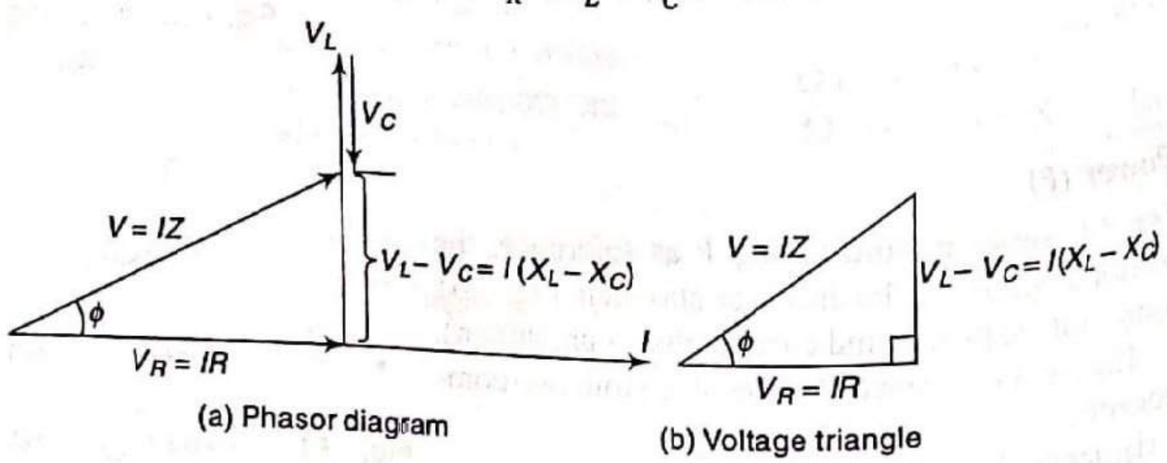

(a) Phasor diagram (b) Voltage triangle

Fig. 2.64

It is clear from the phasor diagram that the current I lags behind the applied voltage V by $\phi°$ ($\phi° < 90$). Therefore, nature of the circuit is inductive.

Phase angle of the circuit, $\phi = \tan^{-1}\dfrac{V_L - V_C}{V_R} = \tan^{-1}\dfrac{I(X_L - X_C)}{IR}$

$$= \tan^{-1}\left(\frac{X_L - X_C}{R}\right)$$

So, power factor of the circuit, $\text{pf} = \cos\phi = \dfrac{V_R}{V} = \dfrac{IR}{IZ} = \dfrac{R}{Z}$ lagging

Impedance (Z) The voltage triangle of the circuit is shown in Fig. 2.64(b). Dividing each of voltage phasor by 'I' in a voltage triangle, we get the impedance triangle as shown in Fig. 2.65.

From the impedance triangle,

Circuit impedance, $Z = \sqrt{R^2 + (X_L - X_C)^2}\ \Omega$

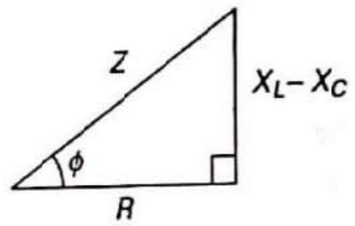

Fig. 2.65 Impedance triangle (when $X_L > X_C$)

The impedance can be expressed in rectangular and polar forms as

$$\bar{Z} = [R + j(X_L - X_C)]\ \Omega$$

and $\bar{Z} = (Z \angle \phi)\ \Omega$

Case (ii) $X_C > X_L$

If $X_C > X_L$, then $V_C > V_L$. The inductive effect gets neutralized and the circuit behaves like a *R-C* circuit.

Phasor diagram Taking current as reference phasor, the phasor diagram of the circuit can be drawn as shown in Fig. 2.66(a).

From circuit diagram, $\bar{V} = \bar{V}_R + \bar{V}_L + \bar{V}_C$

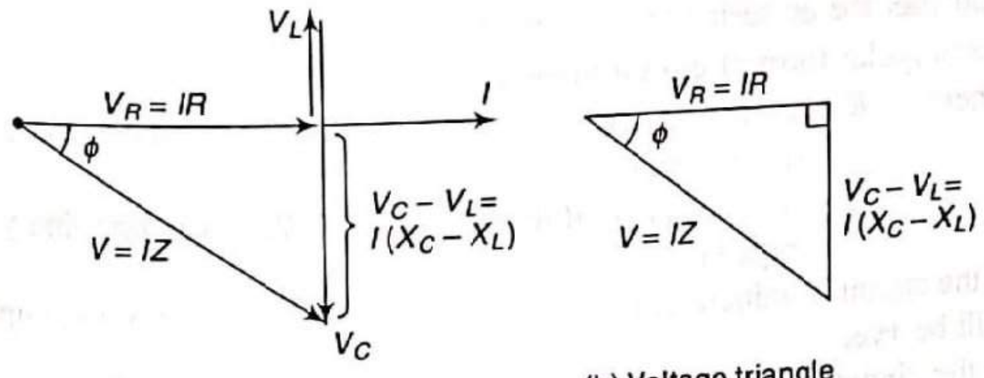

(a) Phasor diagram (b) Voltage triangle

Fig. 2.66

It is clear from the phasor diagram that the current I leads the applied voltage V by $\phi°$ ($\phi° < 90°$). Therefore, nature of the circuit is capacitive.

Phase angle of the circuit, $\phi = \tan^{-1}\dfrac{V_C - V_L}{V_R} = \tan^{-1}\dfrac{I(X_C - X_L)}{IR}$

$$= \tan^{-1}\left(\frac{X_C - X_L}{R}\right)$$

So, power factor of the circuit, $\text{pf} = \cos\phi = \frac{V_R}{V} = \frac{IR}{IZ} = \frac{R}{Z}$ leading

Impedance (Z)

The voltage triangle of the circuit is shown in Fig. 2.66(b). Dividing each of voltage phasor by I, we get the impedance triangle as shown in Fig. 2.67.

From the impedance triangle, circuit impedance,

$Z = \sqrt{R^2 + (X_C - X_L)^2}\ \Omega$

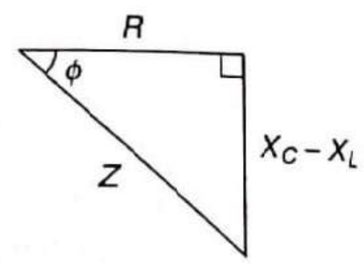

Fig. 2.67 Impendance triangle (when $X_c > X_L$)

The impedance can be expressed in rectangular and polar forms as

$$\bar{Z} = [R - j(X_C - X_L)]\ \Omega$$

and $\bar{Z} = (Z\angle -\phi)\ \Omega$

2.2.4 Analysis of AC Series Circuit

The following concepts are useful for analysis of an ac series circuit:

1. While analysing the ac series circuits, we need to express the circuit impedance into its rectangular and polar forms.

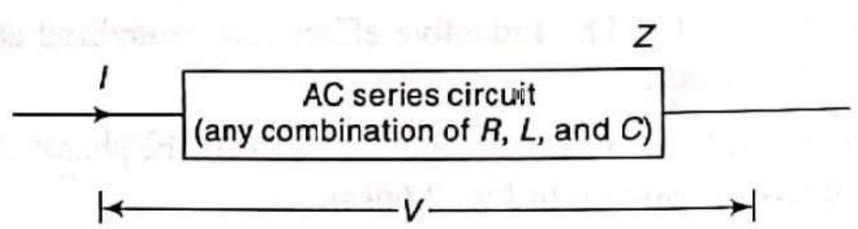

Fig. 2.68(a)

Consider the ac series circuit shown in Fig. 2.68(a).

Rectangular form of circuit impedance, $\bar{Z} = (R \pm jX)\ \Omega$

where R = Real part of impedance, which is the total or equivalent resistance of the circuit

X = Net reactance of the circuit, i.e., $|X_L - X_C|$, imaginary part of impedance

If the circuit is inductive, i.e., $X_L > X_C$, the imaginary part of the impedance will be +ve.

If the circuit is capacitive, i.e., $X_C > X_L$, the imaginary part of impedance will be –ve.

For example, consider an ac series circuit as shown in Fig. 2.68(b).

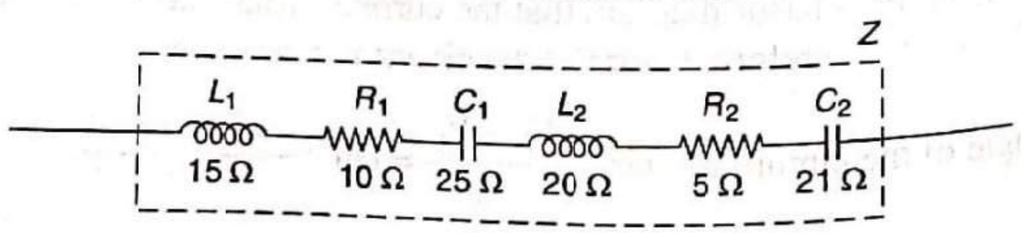

Fig. 2.68(b)

Total resistance of the circuit, $R = R_1 + R_2 = 10 + 5 = 15\ \Omega$

Total inductive reactance, $X_L = X_{L1} + X_{L2} = 15 + 20 = 35\ \Omega$

Total capacitive reactance, $X_C = X_{C1} + X_{C2} = 25 + 21 = 46\ \Omega$

Hence, net reactance, $X = X_C - X_L = 46 - 35 = 11\ \Omega$

Now, rectangular form of circuit impedance can be written as

$$\bar{Z} = (15 - j11)\ \Omega$$

(As $X_C > X_L$, imaginary part of $\bar{Z}$ is negative.)

2. For any unknown circuit, if rectangular form of impedance is given, then we get the following information:
   1. The effective components of the circuit, i.e., real part of $\bar{Z}$ is the total or equivalent resistance of the circuit and imaginary part of $\bar{Z}$ is the net reactance of the circuit.
   2. Nature of the circuit, i.e., if imaginary part is +ve, then circuit is inductive and if imaginary part is –ve, then circuit is capacitive.
   3. Phase angle of the circuit can be calculated as

$$\phi = \tan^{-1}\frac{\text{imaginary part of } \bar{Z}}{\text{real part of } \bar{Z}}$$

For example, consider the ac series circuit shown in Fig. 2.68(c).

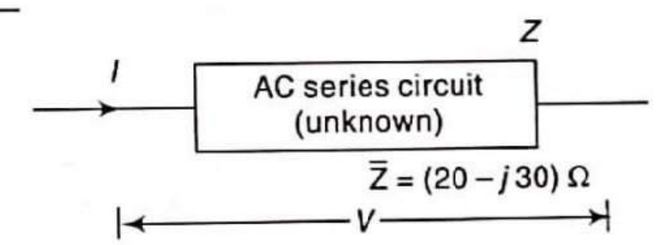

Fig. 2.68(c)

From rectangular form of impedance, we get

1. $R_{\text{effective}} = 20\ \Omega$, $X_{\text{effective}} = 30\ \Omega$
2. Nature of the circuit is capacitive.
3. Phase angle, i.e., $\phi = \tan^{-1}\frac{30}{20} = 56.31°$

3. For any unknown circuit, if polar form of circuit impedance is given, then we get the following information:
   1. The magnitude of impedance (Z).
   2. Phase angle of the circuit, i.e., angle between voltage across the circuit (V) and current through the circuit (I).
   3. Nature of the circuit, i.e., if angle is +ve, then circuit is inductive and if angle is –ve, then it is capacitive.

For example, consider the ac series circuit shown in Fig. 2.68(d).

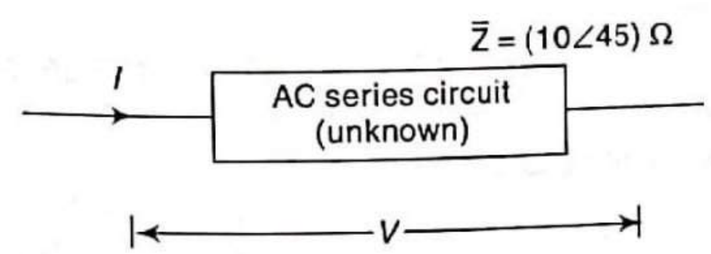

Fig. 2.68(d)

From polar form of impedance, we get the following information:

1. Magnitude of impedance, Z = 10 Ω.
2. Phase angle, $\phi = 45°$.
3. Nature of the circuit is inductive (as angle is +ve).

4. By using Ohm's law, we can calculate the unknown quantities, i.e.,

Circuit impedance, $Z = \frac{V}{I}$ ohm or $\bar{Z} = \frac{\bar{V}}{\bar{I}}$ ohm

Circuit current, $I = \frac{V}{Z}$ ampere or $\bar{I} = \frac{\bar{V}}{\bar{Z}}$ ampere

Voltage across the circuit, $V = IZ$ volt or $\bar{V} = \bar{I}\bar{Z}$ volt

Example 2.29 A coil having a resistance of 7 Ω and an inductance of 31.8 mH is connected to a 230 V, 50 Hz supply. Calculate (i) circuit current, (ii) phase angle, (iii) power factor, and (iv) power consumed.

Solution

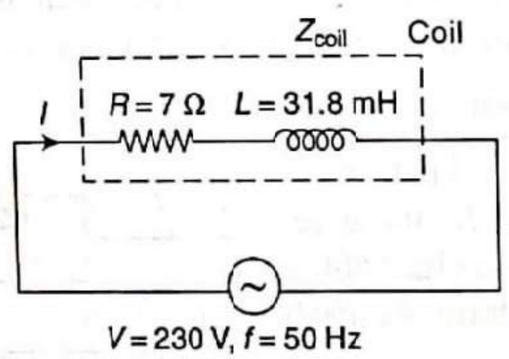

Fig. 2.69

We have Inductive reactance, $X_L = 2\pi fL = 2\pi \times 50 \times 31.8 \times 10^{-3} = 10\ \Omega$

Impedance of coil, $Z_{coil} = \sqrt{R^2 + X_L^2} = \sqrt{(7)^2 + (10)^2} = 12.21\ \Omega$

(i) By Ohm's law,

Circuit current, $I = \frac{V}{Z_{coil}} = \frac{230}{12.21} = 18.84$ A

(ii) Phase angle, $\phi = \tan^{-1}\frac{X_L}{R} = \tan^{-1}\frac{10}{7} = 55°$

(iii) Power factor, PF = cos ϕ = cos 55° = 0.574 lagging
(As circuit is inductive, pf is lagging.)

(iv) Power consumed, $P = VI\cos\phi$
$= 230 \times 18.84 \times 0.574 = 2487.26$ W

Alternative method (by using phasor algebra)

Taking applied voltage as reference,

$\bar{V} = (230 \angle 0)$ V

$\bar{Z} = (7 + j10)\ \Omega$

So, $\bar{Z} = (12.21 \angle 55)\ \Omega$

(i) By Ohm's law,

$$\bar{I} = \frac{\bar{V}}{\bar{Z}} = \frac{(230\angle 0)}{(12.21\angle 55)} = (18.84 \angle -55)\text{ A}$$

(ii) From polar form of impedance,
phase angle, $\phi = 55°$

(iii) Power factor, pf = cos ϕ = cos 55° = 0.574 lagging

(iv) Power consumed, $P = VI\cos\phi = 230 \times 18.84 \times 0.574 = 2487.26$ W

Example 2.30 For a circuit in Fig. 2.70, determine the (i) circuit impedance (ii) circuit current (iii) power factor (iv) active power (v) reactive power (vi) apparent power.

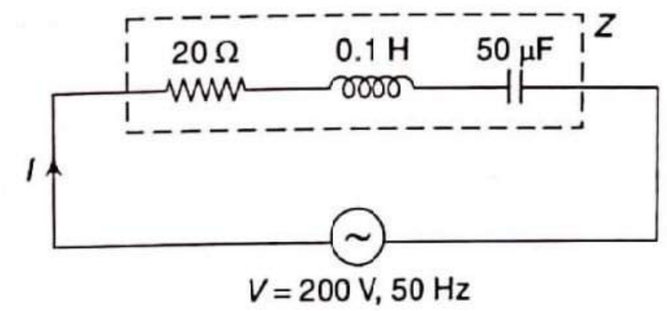

Fig. 2.70

Solution

Given: $V = 200$ V, $f = 50$ Hz, $R = 20\ \Omega$

$L = 0.1$ H $\Rightarrow X_L = 2\pi fL = 31.42\ \Omega$

$C = 50 \times 10^{-6}$ F $\Rightarrow X_C = \frac{1}{2\pi fC} = 63.66\ \Omega$

Net reactance, $X = X_C - X_L = 32.24\ \Omega$

As $X_C > X_L$, circuit is capacitive.

Taking applied voltage as reference,

$\bar{V} = (200 \angle 0)$ V

$\bar{Z} = (20 - j32.24)\ \Omega$

or $\bar{Z} = (37.94 \angle -58.19)\ \Omega$

(i) From polar form of impedance, $Z = 37.94\ \Omega$

(ii) By Ohm's law,

$$\text{Circuit current, } \bar{I} = \frac{\bar{V}}{\bar{Z}} = \frac{(200\angle 0)}{(37.94\angle -58.19)} = (5.27 \angle 58.19)\text{ A}$$

(iii) Power factor, pf = cos ϕ
= cos (–58.19°)
= 0.527 leading
[As circuit is capacitive ($X_C > X_L$), pf is leading]

(iv) Active power, $P = VI\cos\phi$
$= 200 \times 5.27 \times \cos(-58.19°)$
$= 555.46$ W

(v) Reactive power, $Q = VI\sin\phi$
$= 200 \times 5.27 \times \sin(-58.19°)$
$= -895.69$ VAR

(vi) Apparent power, $S = VI$

$$= 200 \times 5.27$$
$$= 1054 \text{ VA}$$

Example 2.31 For a circuit shown in Fig. 2.71, determine (i) circuit current, (ii) voltage drop V_1, and (iii) voltage drop V_2.

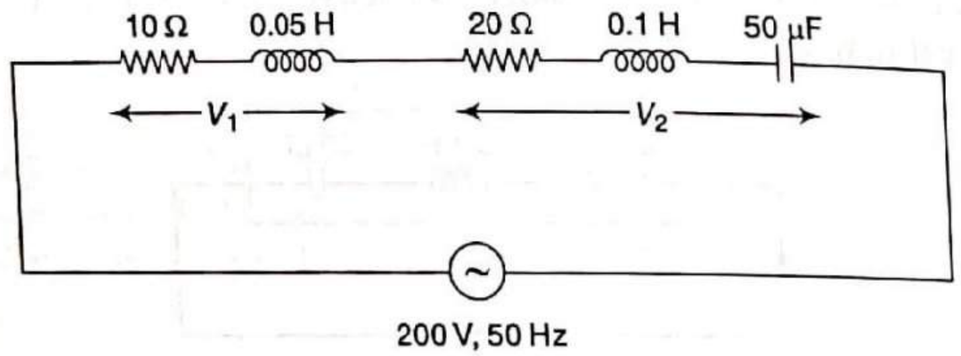

Fig. 2.71

Solution

Let us redraw then the given circuit and assume the different unknown quantities. We then get the circuit as shown in Fig. 2.72.

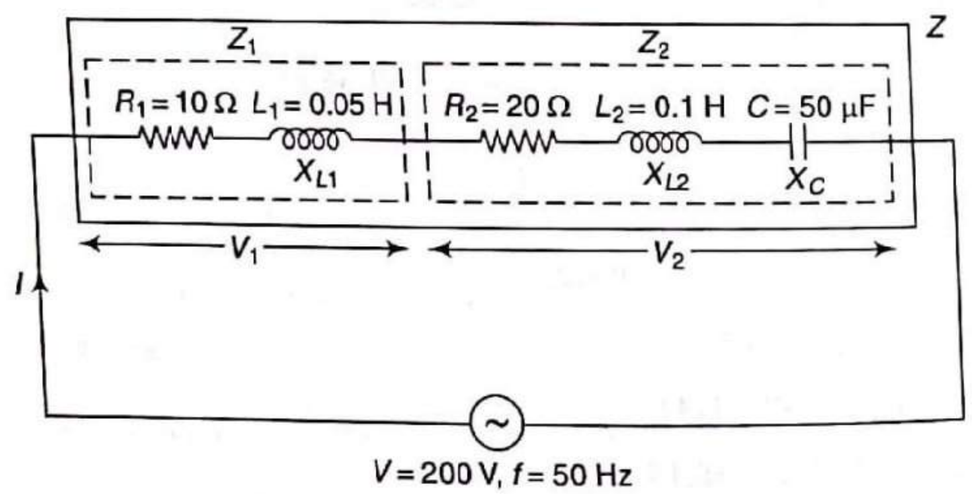

Fig. 2.72

Taking applied voltage as reference,

$$\bar{V} = (200 \angle 0) \text{ V}, \qquad R = R_1 + R_2 = 10 + 20 = 30\ \Omega$$
$$L_1 = 0.05 \text{ H} \Rightarrow X_{L_1} = 2\pi f L_1 = 15.71\ \Omega$$
$$L_2 = 0.1 \text{ H} \Rightarrow X_{L_2} = 2\pi f L_2 = 31.42\ \Omega$$

So, $$X_L = X_{L_1} + X_{L_2} = 47.13\ \Omega$$

$$C = 50 \times 10^{-6} \text{ F} \Rightarrow X_C = \frac{1}{2\pi f C} = 63.66\ \Omega$$

Net reactance, $X = X_C - X_L = 16.53\ \Omega$

As $X_C > X_L$, circuit is capacitive.

Total impedance of the circuit,

$$\bar{Z} = (30 - j16.53)\ \Omega$$
$$\bar{Z} = (34.25 \angle -28.85)\ \Omega$$

By Ohm's law,

Circuit current, $$\bar{I} = \frac{\bar{V}}{\bar{Z}} = \frac{200 \angle 0}{(34.25 \angle -28.85)} = (5.84 \angle 28.85) \text{ A}$$

From circuit diagram,

Impedance, $$\bar{Z}_1 = (R_1 + j X_{L_1})\ \Omega$$
$$= (10 + j15.71)\ \Omega$$
$$= (18.62 \angle 57.52)\ \Omega$$

Impedance, $$\bar{Z}_2 = [R_2 - j(X_C - X_{L_2})]\ \Omega$$
$$= [20 - j(63.66 - 31.42)]\ \Omega$$
$$= (20 - j32.24)\ \Omega$$
$$= (37.94 \angle -58.19)\ \Omega$$

By Ohm's law,

$$\bar{V}_1 = \bar{I}\bar{Z}_1 = (5.84 \angle 28.85)(18.62 \angle 57.52) = (108.74 \angle 86.37) \text{ V}$$

and $$\bar{V}_2 = \bar{I}\bar{Z}_2 = (5.84 \angle 28.85)(37.94 \angle -58.19) = (221.57 \angle -29.34) \text{ V}$$

Example 2.32 An rms voltage of $(100 \angle 0)$ V is applied to series combination of Z_1 and Z_2, where $\bar{Z}_1 = (20 \angle 30°)\Omega$. The effective voltage drop across Z_1 is known to be $(40 \angle -30°)$ V. Find the reactive component of Z_2.

Solution

The conditions of the example are shown in Fig. 2.73.

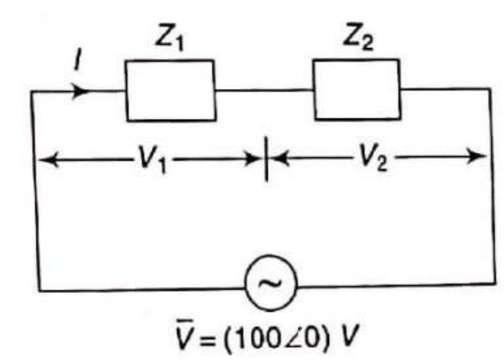

Fig. 2.73

Given:

$$\bar{V} = (100 \angle 0) \text{ V}$$
$$\bar{Z}_1 = (20 \angle 30)\ \Omega$$
$$\bar{V}_1 = (40 \angle -30)\ \Omega$$

Required: Reactive component of Z_2

For reactive component (imaginary part) of Z_2, the rectangular form of Z_2 is required. By using Ohm's law, $\bar{Z}_2$ can be calculated as

$$\bar{Z}_2 = \frac{\bar{V}_2}{\bar{I}}$$

Thus, for calculation of $\bar{Z}_2$, $\bar{V}_2$ and $\bar{I}$ are required.

$$\bar{V}_2 = \bar{V} - \bar{V}_1 = (100 \angle 0) - (40 \angle -30)$$
$$= (100 + j0) - (34.64 - j20)$$
$$= (65.36 + j20) \text{ V}$$
$$= (68.35 \angle 17.01) \text{ V}$$

By Ohm's law,

Circuit current, $$\bar{I} = \frac{\bar{V}_1}{\bar{Z}_1} = \frac{(40 \angle -30)}{(20 \angle 30)} = (2 \angle -60) \text{ A}$$

By Ohm's law,

$$\bar{Z}_2 = \frac{\bar{V}_2}{\bar{I}} = \frac{(68.35\angle 17.01)}{(2\angle -60)}$$
$$= (34.175\angle 77.01)\ \Omega$$
$$= (7.68 + j33.3)\ \Omega$$

Hence, reactive component of $Z_2 = 33.3\ \Omega$

Example 2.33 A voltage $\bar{V} = (150 + j180)$V is applied across an impedance and the current is found to be $\bar{I} = (5 - j4)$A. Determine (i) scalar impedance, (ii) reactance, and (iii) power consumed.

Solution

Given: $\bar{V} = (150 + j180)$ V
$= (234.31\angle 50.19)$ V
$\bar{I} = (5 - j4)$ A
$= (6.4\angle -38.66)$ A

Circuit impedance,

$$\bar{Z} = \frac{\bar{V}}{\bar{I}} = \frac{(234.31\angle 50.19)}{(6.4\angle -38.66)}$$
$$= (36.61\angle 88.85)\ \Omega$$
$$= (0.73 + j36.6)\ \Omega$$

(i) From polar form of impedance, scalar impedance, $Z = 36.61\ \Omega$
(ii) From rectangular form of impedance, reactance = 36.6 Ω
(iii) Power consumed,

$$P = VI\cos\phi$$
$$= 234.31 \times 6.4 \times \cos 88.85°$$
$$= 30.096\ \text{W}$$

Example 2.34 The voltage applied to a series circuit consisting of two pure elements is given by $v = 180 \sin \omega t$ and the resulting current is given by $i = 2.5 \sin (\omega t - 45)$. Find the average power taken by the circuit and values of the elements.

Solution

The conditions of the example are shown in Fig. 2.74.

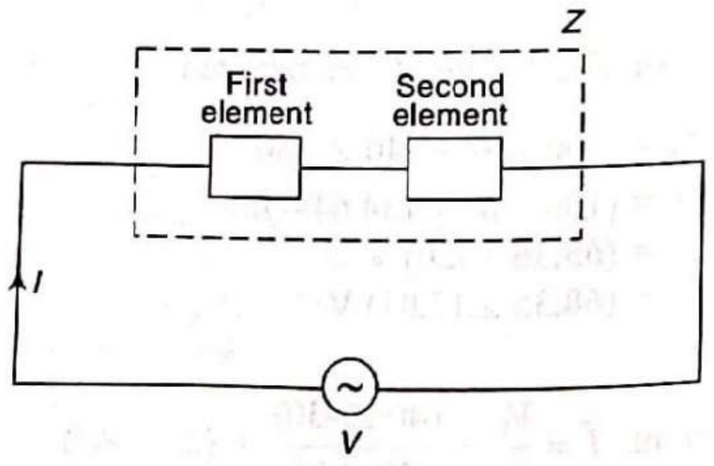

Fig. 2.74

Given:
$v = 180 \sin \omega t$

So, $\bar{V} = (127.28\angle 0)$ V
$i = 2.5 \sin (\omega t - 45)$

Also given:

So, $\bar{I} = (1.77\angle -45)$ A

By Ohm's law, circuit impedance can be calculated as

$$\bar{Z} = \frac{\bar{V}}{\bar{I}} = \frac{(127.28\angle 0)}{(1.77\angle -45)}$$
$$= (71.91\angle 45)\ \Omega$$
$$= (50.85 + j50.85)\ \Omega$$

Power, $P = VI\cos\phi$
$= 127.28 \times 1.77 \times \cos 45°$
$= 159.3$ W

From rectangular form of impedance, values of the circuit elements are:
$R = 50.85\ \Omega$, $X_L = 50.85\ \Omega$

Example 2.35 An emf of 50 V, 50 Hz is applied to an impedance $\bar{Z}_1 = (12.5 + j21)\ \Omega$. An impedance Z_2 is added in series with Z_1, the current becomes half of the original, and leads it by 14.2°. Determine Z_2.

Solution

Case (i) When an emf of 50 V, 50 Hz is applied to an impedance $\bar{Z}_1 = (12.5 + j21)\ \Omega$

Let the circuit current is I_1A (see Fig. 2.75).

Taking applied voltage as reference,

$\bar{V} = (50\angle 0)$ V

$$\text{Circuit current, } I_1 = \frac{\bar{V}}{\bar{Z}_1} = \frac{(50\angle 0)}{(12.5 + j21)}$$
$$= \frac{(50\angle 0)}{(24.44\angle 59.24)}$$
$$= (2.046\angle -59.24)\ \text{A}$$

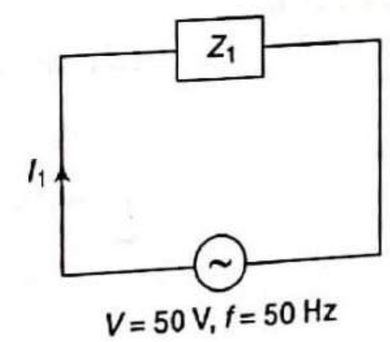

Fig. 2.75

Case (ii) When an impedance Z_2 is added in series with Z_1, the current becomes half of the original, and leads it by 14.2°.

Let the circuit current is I_2A (see Fig. 2.76).

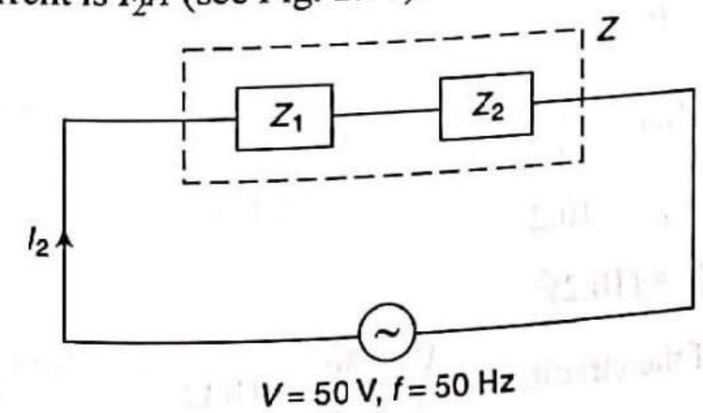

Fig. 2.76

As I_2 is half of I_1 and leads it by 14.2°,

$$\bar{I}_2 = (1.023 \angle -45.04)\ \text{A}$$

Now, total circuit impedance can be calculated as

$$\bar{Z} = \frac{\bar{V}}{\bar{I}_2} = \frac{(50 \angle 0)}{(1.023 \angle -45.04)} = (48.88 \angle 45.04)\ \Omega$$

From the circuit diagram,

$$\bar{Z} = \bar{Z}_1 + \bar{Z}_2$$

So, $\bar{Z}_2 = \bar{Z} - \bar{Z}_1$

$$= (48.88 \angle 45.04) - (12.5 + j21)$$
$$= (34.54 + j34.59) - (12.5 + j21)$$
$$= (22.04 + j13.59)\ \Omega$$
$$= (25.89 \angle 31.66)\ \Omega$$

Example 2.36 Find r and L in the circuit shown in Fig. 2.77.

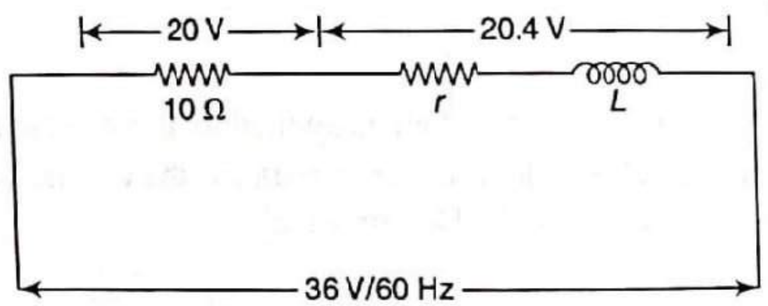

Fig. 2.77

Solution

Assuming the circuit current, various voltages and impedances, we get Fig. 2.78.

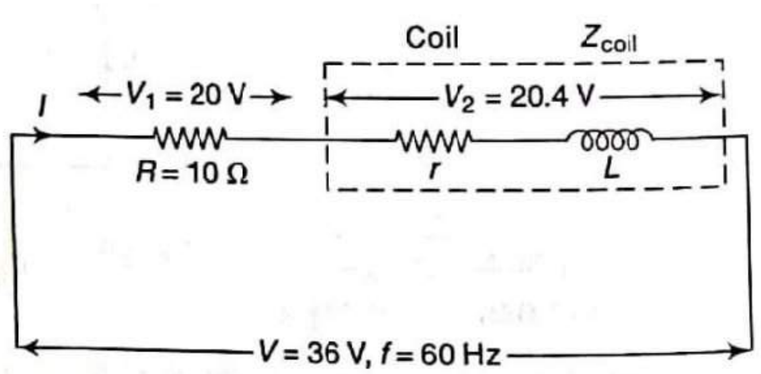

Fig. 2.78

Circuit current, $I = \dfrac{V_1}{R} = \dfrac{20}{10} = 2\ \text{A}$

Impedance of coil, $Z_{coil} = \dfrac{V_2}{I} = \dfrac{20.4}{2} = 10.2\ \Omega$

We have $\sqrt{r^2 + X_L^2} = 10.2$

or $r^2 + X_L^2 = (10.2)^2$ (i)

Total impedance of the circuit, $Z = \dfrac{V}{I} = \dfrac{36}{2} = 18\ \Omega$

So, $\sqrt{(R+r)^2 + X_L^2} = 18$

or $\sqrt{(10+r)^2 + X_L^2} = 18$

or $(10+r)^2 + X_L^2 = (18)^2$ (ii)

From Eqs (i) and (ii),

$$r = 6\ \Omega$$

and $X_L = 8.25\ \Omega$

So, $2\pi f L = 8.25\ \Omega$

or $2\pi \times 60 \times L = 8.25$

or $L = 0.0219\ \text{H}$

Example 2.37 A current of 5 A flows through a non-inductive resistance in series with a choking coil supplied at 250 V, 50 c/sec. If the voltage across the resistance is 125 V and across the coil 200 V, calculate

(i) Impedance, reactance, and resistance of the coil
(ii) Power absorbed by the coil
(iii) Power factor of the coil

Also draw phasor diagram.

Solution

The conditions of the example are shown in Fig. 2.79.

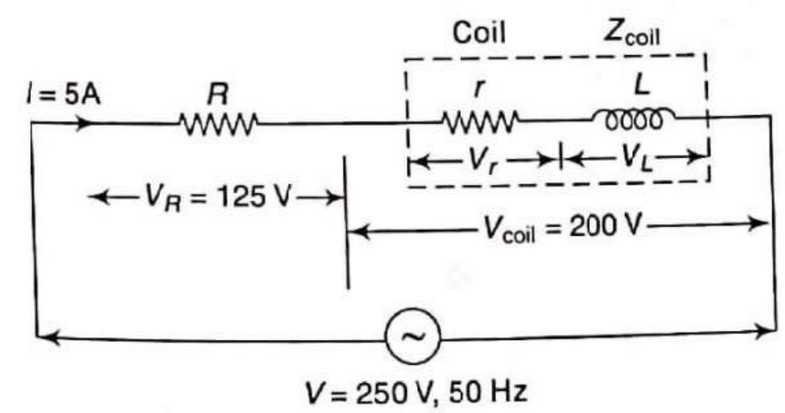

Fig. 2.79

(i) Resistance, $R = \dfrac{V_R}{I} = \dfrac{125}{5} = 25\ \Omega$

Impedance of the coil, $Z_{coil} = \dfrac{V_{coil}}{I} = \dfrac{200}{5} = 40\ \Omega$

Total impedance of the circuit, $Z = \dfrac{V}{I} = \dfrac{250}{5} = 50\ \Omega$

We have $Z_{coil} = \sqrt{r^2 + X_L^2}$

or $Z_{coil}^2 = r^2 + X_L^2$

or $(40)^2 = r^2 + X_L^2$ (i)

Also $\quad Z = \sqrt{(R+r)^2 + X_L^2}$

or $\quad Z^2 = (R+r)^2 + X_L^2$

or $\quad (50)^2 = (25+r)^2 + X_L^2 \qquad$ (ii)

From Eqs (i) and (ii),

$r = 5.5\ \Omega$

$X_L = 39.62\ \Omega$

(ii) Power absorbed by the coil, $P_{coil} = I^2 r = (5)^2 \times 5.5 = 137.5$ W

(iii) $(pf)_{coil} = \dfrac{r}{Z_{coil}}$

$= \dfrac{5.5}{40}$

$= 0.137$ lagging

Phasor diagram

- Take 'I' as reference phasor.
- Equation of the circuit, $\bar{V} = \bar{V}_R + \bar{V}_{coil}$

So, $\quad \bar{V} = \bar{V}_R + \bar{V}_r + \bar{V}_L$

where $\quad V_R = 125$ V

$V_r = Ir = 27.5$ V

$V_L = IX_L = 198.1$ V

- Scale: 1 cm = 25 V (Fig. 2.80)

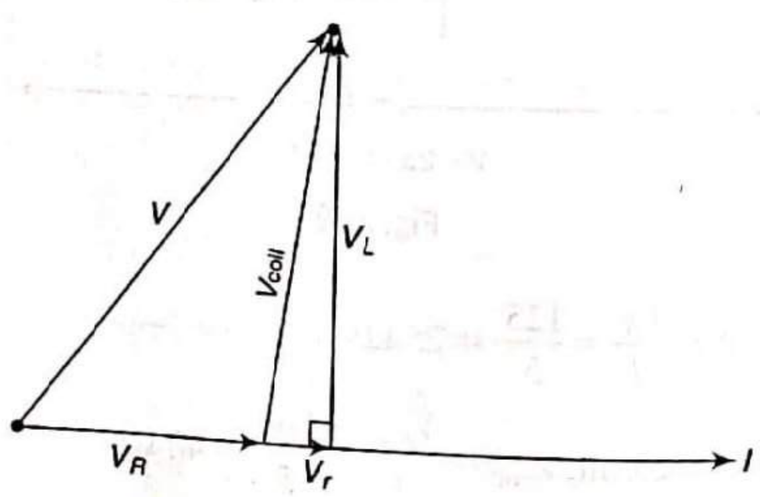

Fig. 2.80

Example 2.38 A 100 Ω resistor is connected in series with a choke coil. When a 400 V, 50 Hz supply is applied to this combination, the voltages across the resistance and the choke coil are 200 V and 300 V respectively. Find the power consumed by the choke coil. Also calculate the power factor of choke coil and power factor of the circuit.

Solution

The conditions in the example are shown in Fig. 2.81.

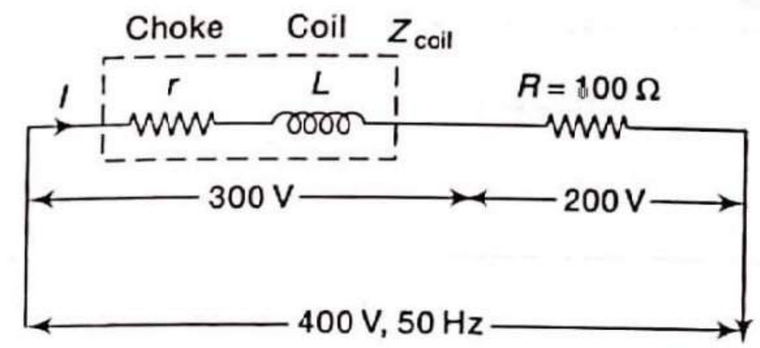

Fig. 2.81

Circuit current, $I = \dfrac{200}{100} = 2$ A

Impedance of choke coil, $Z_{coil} = \dfrac{300}{2} = 150\ \Omega$

So, $\quad \sqrt{r^2 + X_L^2} = 150$

or $\quad r^2 + X_L^2 = (150)^2 \qquad$ (i)

Total impedance, $Z = \dfrac{400}{2} = 200\ \Omega$

So, $\quad \sqrt{(R+r)^2 + X_L^2} = 200$

or $\quad (100+r)^2 + X_L^2 = (200)^2 \qquad$ (ii)

From Eqs (i) and (ii),

$r = 37.5\ \Omega$

$X_L = 145.24\ \Omega$

Power consumed by choke coil, $P_{coil} = I^2 r = (2)^2 \times 37.5 = 150$ W

Power factor of choke coil, $(pf)_{coil} = \dfrac{r}{Z_{coil}} = \dfrac{37.5}{150} = 0.25$ lagging

Power factor of the circuit, $pf = \dfrac{R+r}{Z} = \dfrac{100+37.5}{200} = 0.687$ lagging

Example 2.39 When a resistance and coil in series are connected to a 240 V supply, current of 3 A flows lagging 37° behind the supply voltage, while the voltage across the coil is 171 V. Find the resistance of resistor, resistance, and reactance of the coil.

Solution

The given conditions are shown in Fig. 2.82.

As current of 3 A flows lagging 37° behind the supply voltage, circuit is inductive, and the phase angle, $\phi = 37°$.

Impedance of the coil, $Z_{coil} = \dfrac{V_{coil}}{I} = \dfrac{171}{3} = 57\ \Omega$

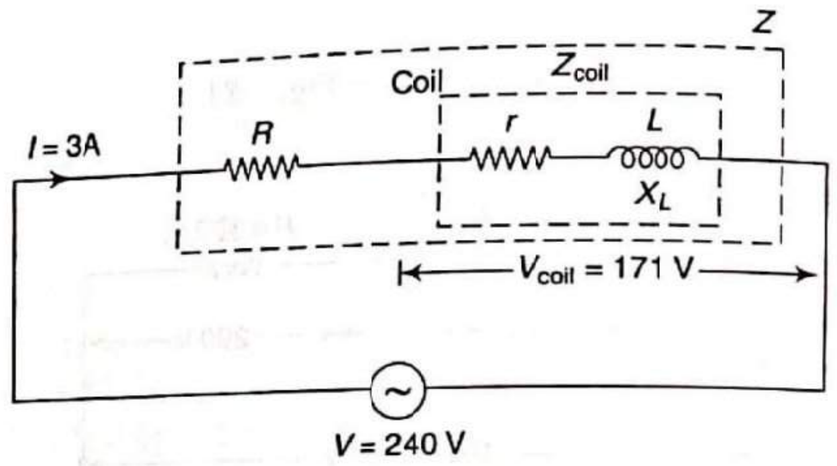

Fig. 2.82

Total impedance of the circuit, $Z = \frac{V}{I} = \frac{240}{3} = 80\ \Omega$

As pf of the circuit can be expressed as

$$(\text{pf})_{ckt} = \frac{R+r}{Z}$$

or $\cos\phi = \frac{R+r}{Z}$

or $R + r = \cos\phi \times Z$

$= \cos 37 \times 80$

$= 63.89\ \Omega$

We have $Z = \sqrt{(R+r)^2 + X_L^2}$

or $Z^2 = (R+r)^2 + X_L^2$

or $80^2 = (63.89)^2 + X_L^2$

or $X_L = 48.15\ \Omega$

We have $Z_{coil} = \sqrt{r^2 + X_L^2}$

or $Z_{coil}^2 = r^2 + X_L^2$

or $(57)^2 = r^2 + (48.15)^2$

So, $r = 30.51\ \Omega$

As $R + r = 63.89$,

$R + 30.51 = 63.89$

or $R = 33.38\ \Omega$

Example 2.40 Voltage and current in an ac circuit are given as

$$v = 200 \sin(377t) \text{ and } i = 8 \sin\left(377t - \frac{\pi}{6}\right)$$

Determine the active, reactive and apparent power drawn by the circuit.

Solution

The standard sinusoidal forms are given as

$$v = 200 \sin 377t$$

$$i = 8 \sin\left(377t - \frac{\pi}{6}\right)$$

The rms values are

$$V = \frac{200}{\sqrt{2}} = 141.42 \text{ V}, \quad I = \frac{8}{\sqrt{2}} = 5.66 \text{ A}$$

From the above equations, the current lags behind the voltage by $\frac{\pi}{6}$ rad or 30°, i.e., phase angle, $\phi = 30°$.

Active power, $P = VI\cos\phi$

$= 141.42 \times 5.66 \times \cos 30$

$= 693.19$ W

Reactive power, $Q = VI\sin\phi$

$= 141.42 \times 5.66 \times \sin 30$

$= 400.22$ VAR

Apparent power, $S = VI$

$= 141.42 \times 5.66$

$= 800.44$ VA

Example 2.41 A coil of 0.6 pf is in series with a 100 μF capacitor and is connected to a 50 Hz supply. The potential difference across the coil is equal to the potential difference across the capacitor. Find inductance and resistance of the coil.

Solution

The given conditions are shown in Fig. 2.83.

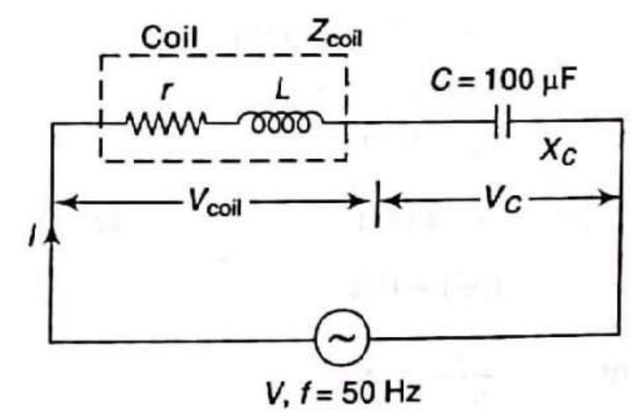

Fig. 2.83

$$C = 100 \times 10^{-6} \text{ F}$$

So, $X_C = \frac{1}{2\pi fC} = 31.83\ \Omega$

Potential difference across the coil = Potential difference across the capacitor

or $V_{coil} = V_C$

or $IZ_{coil} = IX_C$

or $Z_{coil} = X_C$

or $Z_{coil} = 31.83\ \Omega$

Now, $(\text{pf})_{coil} = 0.6$

or $\frac{r}{Z_{coil}} = 0.6$

or $r = 0.6 \times Z_{coil} = 0.6 \times 31.83 = 19.098\ \Omega$

Thus, $Z_{coil} = \sqrt{r^2 + X_L^2}$

or $31.83 = \sqrt{(19.098)^2 + X_L^2}$

or $X_L = 25.46\ \Omega$

or $2\pi fL = 25.46$

or $2\pi \times 50 \times L = 25.46$

or $L = 0.081$ H

Example 2.42 A coil A takes 2 A at power factor 0.8 lagging with an applied voltage of 10 V. A second coil B takes 2 A with power factor of 0.7 lagging with an applied voltage of 5 V. What voltage will be required to produce a total current of 2 A with coils A and B in series? Find power factor in this case.

Solution

The given conditions are shown in Fig. 2.84.

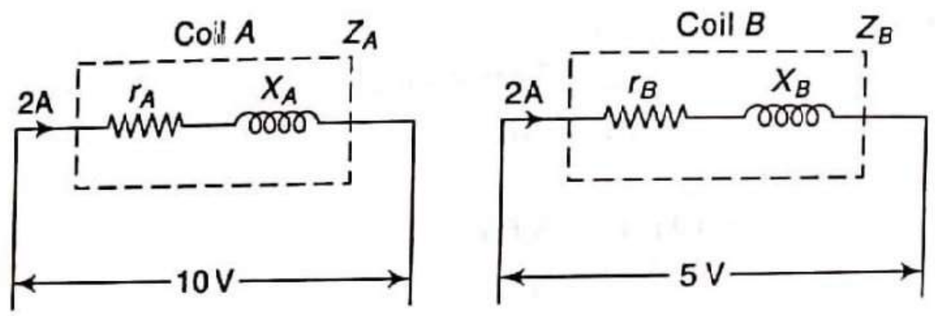

Fig. 2.84

Let phase angle of coil A is ϕ_A and phase angle of coil B is ϕ_B.

For coil A:

(pf) = 0.8 lagging

or $\cos\phi_A = 0.8$

or $\phi_A = 36.87°$

Impedance of coil, $Z_A = \dfrac{10}{2} = 5\ \Omega$

(pf) = 0.8

or $\dfrac{r_A}{Z_A} = 0.8$

or $r_A = 0.8 \times Z_A = 0.8 \times 5 = 4\ \Omega$

Now, $Z_A = \sqrt{r_A^2 + X_A^2}$

or $5 = \sqrt{(4)^2 + (X_A)^2}$

So, $X_A = 3\ \Omega$

For coil B:

pf = 0.7

or $\cos\phi_B = 0.7$

or $\phi_B = 45.57°$

Impedance of coil, $Z_B = \dfrac{5}{2} = 2.5\ \Omega$

pf = 0.7

or $\dfrac{r_B}{Z_B} = 0.7$

So, $r_B = 0.7 \times Z_B = 0.7 \times 2.5 = 1.75\ \Omega$

Now, $Z_B = \sqrt{r_B^2 + X_B^2}$

or $2.5 = \sqrt{(1.75)^2 + (X_B)^2}$

So, $X_B = 1.79\ \Omega$

When coils A and B are connected in series (Fig. 2.85):

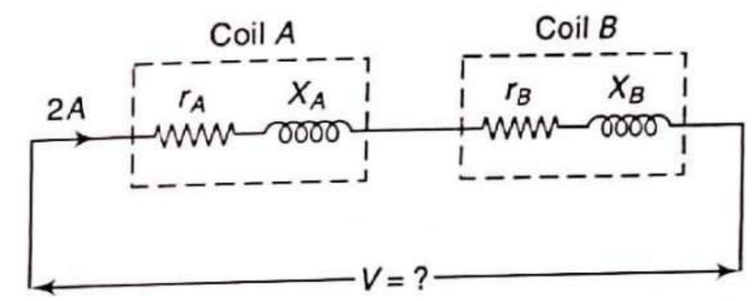

Fig. 2.85

Total impedance of the circuit,

$$Z = \sqrt{(r_A + r_B)^2 + (X_A + X_B)^2}$$

or $Z = \sqrt{(4+1.75)^2 + (3+1.79)^2}$

or $Z = 7.48\ \Omega$

Voltage, $V = IZ = 2 \times 7.48 = 14.96$ V

$$(\text{pf})_{\text{ckt}} = \frac{r_A + r_B}{Z}$$

$$= \frac{4+1.75}{7.48}$$

$$= 0.77 \text{ lagging}$$

Example 2.43 In a series circuit containing resistance and inductance, the current and voltage are expressed as $i(t) = 5 \sin\left(314t + \dfrac{2\pi}{3}\right)$ and $v(t) = 20 \sin\left(314t + \dfrac{5\pi}{6}\right)$. (i) What is the impedance of the circuit? (ii) What are the values of resistance, inductance, and power factor? (iii) What is the average power drawn by the circuit?

Solution

Given:

$$i(t) = 5 \sin\left(314t + \frac{2\pi}{3}\right)$$

$$v(t) = 20 \sin\left(314t + \frac{5\pi}{6}\right)$$

Converting the above standard sinusoidal forms into polar forms:

$$\bar{I} = (3.54 \angle 120°)\ \text{A}$$
$$\bar{V} = (14.14 \angle 150°)\ \text{A}$$

By Ohm's law,

$$\text{Circuit impedance, } \bar{Z} = \frac{\bar{V}}{\bar{I}} = \frac{(14.14 \angle 150)}{(3.54 \angle 120)}$$
$$= (4 \angle 30)\ \Omega$$
$$= (3.64 + j2)\ \Omega$$

(a) From polar form of impedance, $Z = 4\ \Omega$

(b) From rectangular form of impedance,

$R = 3.64\ \Omega, X_L = 2\ \Omega, L = 6.37 \times 10^{-3}$ H

From polar form of impedance, $\phi = 30°$

So, $\text{pf} = \cos\phi$
$= \cos 30°$
$= 0.866$ lagging

(c) Average power, $P = VI\cos\phi$
$= 14.14 \times 3.54 \times \cos 30°$
$= 43.35$ W

Example 2.44 A capacitor of 35 μF is connected in series with a variable resistor. The circuit is connected across 50 Hz mains. Find the value of resistor for a condition when the voltage across the capacitor is half the supply voltage.

Solution

The given conditions are shown in Fig. 2.86.

We have $C = 35 \times 10^{-6}$ F

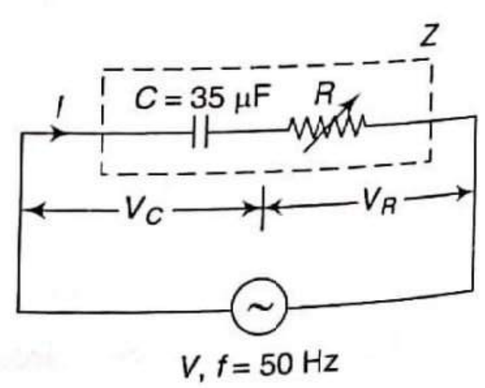

Fig. 2.86

So, $X_C = \dfrac{1}{2\pi fC} = 90.946\ \Omega$

Also $V_C = \dfrac{1}{2}\text{V}$

So, $IX_C = \dfrac{1}{2}IZ$

or $Z = 2X_C$

or $Z = 2 \times 90.946$

or $Z = 181.89\ \Omega$

Now, $Z = \sqrt{R^2 + X_C^2}$

or $(181.89) = \sqrt{R^2 + (90.946)^2}$

So, $R = 157.5\ \Omega$

Example 2.45 A resistance and a capacitance in series, connected across 250 V supply draws 5 A current at a frequency of 50 Hz. When frequency is increased to 60 Hz, it draws a current of 5.8 A. Find the values of R and C and also power drawn in the second case.

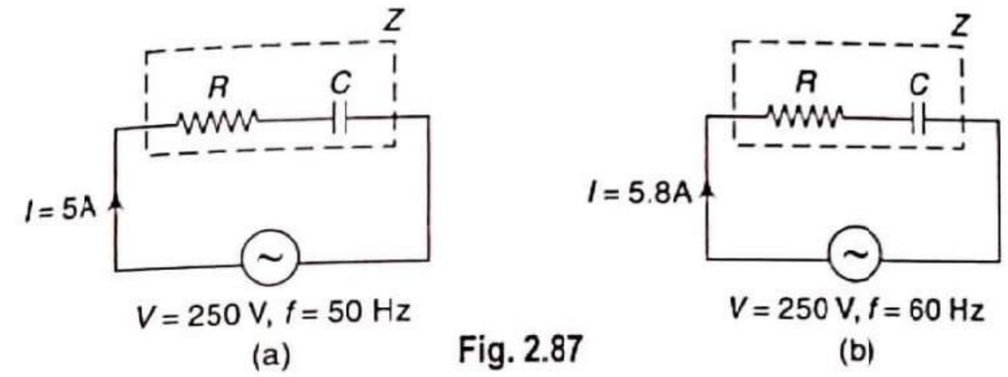

Fig. 2.87

Solution

Case (i) When frequency, $f = 50$ Hz, $I = 5$ A [see Fig. 2.87(a)]

$$\text{Circuit impedance, } Z = \frac{V}{I} = \frac{250}{5} = 50\ \Omega$$

So, $Z = \sqrt{R^2 + X_C^2}$

or $Z^2 = R^2 + \left(\dfrac{1}{2\pi fC}\right)^2$

or $(50)^2 = R^2 + \left(\dfrac{1}{2\pi \times 50 \times C}\right)^2$ (i)

Case (ii) When frequency, $f = 60$ Hz, $I = 5.8$ A [see Fig. 2.87(b)]

$$\text{Circuit impedance, } Z = \frac{V}{I} = \frac{250}{5.8} = 43.1\ \Omega$$

So, $Z = \sqrt{R^2 + X_C^2}$

or $Z^2 = R^2 + \left(\dfrac{1}{2\pi fC}\right)^2$

or $(43.1)^2 = R^2 + \left(\dfrac{1}{2\pi \times 60 \times C}\right)^2$ (ii)

From Eqs (i) and (ii),

$C = 69.42 \times 10^{-6}$ F

or $C = 69.42\ \mu\text{F}$

$R = 19.94\ \Omega$

Power absorbed in the second case,

$P = I^2R$

or $P = (5.8)^2 \times 19.94$

or $P = 670.78$ W

Example 2.46 An *R-L-C* series circuit has a current that lags behind the applied voltage by 45°. The voltage across the inductance has a maximum value equal to twice the maximum value of voltage across the capacitor. Voltage across the inductance is 300 sin(1000*t*) and $R = 20\ \Omega$. Find the values of inductance and capacitance.

Solution

The given conditions are shown in Fig. 2.88.

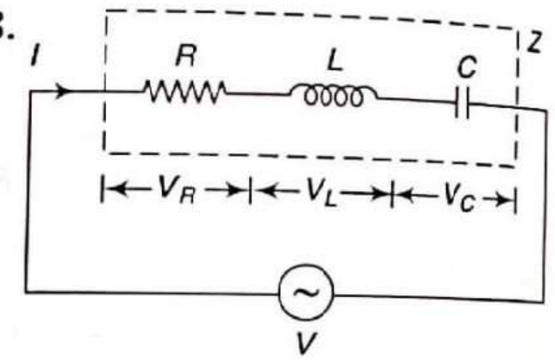

Fig. 2.88

Given:

The circuit current lags behind the applied voltage by 45°, i.e., the circuit is inductive ($X_L > X_C$) and phase angle, $\phi = 45°$.

$$v_L = 300 \sin (1000t)$$

So, $\omega = 1000$ rad/sec

$R = 20\ \Omega$

$V_{L\,max} = 2\ V_{C\,max}$

Required: *L* and *C*

We have $V_{L\,max} = 2\ V_{C\,max}$

or $\sqrt{2}\,V_L = 2(\sqrt{2}V_C)$

So, $V_L = 2V_C$

or $IX_L = 2IX_C$

Hence, $X_L = 2X_C$

Now, $\text{pf} = \cos\phi = \dfrac{R}{Z}$

So, $\cos 45° = \dfrac{20}{Z}$

or $Z = \dfrac{20}{\cos 45°} = 28.28\ \Omega$

Circuit impedance, $Z = \sqrt{R^2 + (X_L - X_C)^2}$

or $28.28 = \sqrt{(20)^2 + (2X_C - X_C)^2}$ $\quad (\because X_L = 2X_C)$

So, $X_C = 20\ \Omega$

As $X_L = 2\,X_C$,

$X_L = 40\ \Omega$

So, $\omega L = 40$

or $1000 \times L = 40$

or $L = 0.04$ H

As $X_C = 20\ \Omega$,

$$\frac{1}{\omega C} = 20$$

or $$\frac{1}{1000 \times C} = 20$$

or $C = 50 \times 10^{-6}$ F

$= 50\ \mu$F

Example 2.47 In an *R-L-C* series circuit, the voltage across the resistor, inductor, and capacitor are 10 V, 15 V, and 10 V respectively. What is the supply voltage?

Solution

The conditions given in the example are shown in Fig. 2.89.

Given: $V_R = 10$ V

$V_L = 15$ V

$V_C = 10$ V

$V = ?$

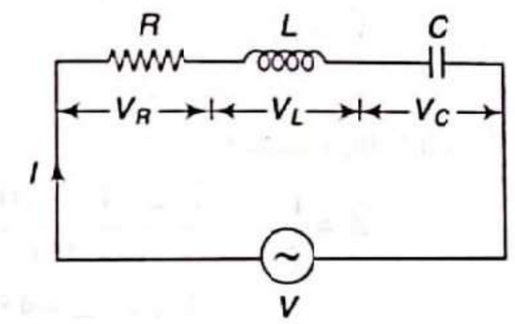

Fig. 2.89

Method (i) From phasor diagram (not to scale):

Take circuit current as reference.

Equation of the circuit, $\bar{V} = \bar{V}_R + \bar{V}_L + \bar{V}_C$

From phasor diagram,

$$V = \sqrt{V_R^2 + (V_L - V_C)^2}$$

or $V = \sqrt{(10)^2 + (15-10)^2}$

So, $V = 11.18$ V

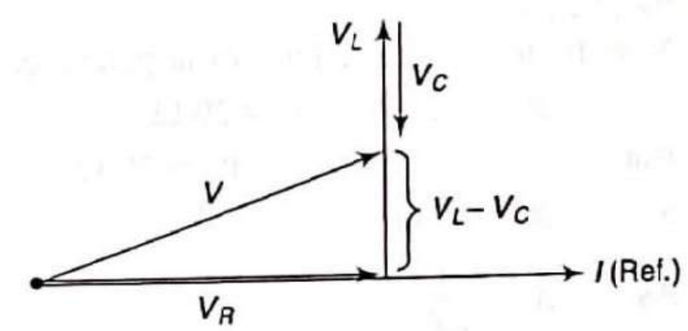

Fig. 2.90

Method (ii) By phasor algebra:

$\bar{V}_R = (10 \angle 0)$

$\bar{V}_L = (15 \angle 90)$

$\bar{V}_C = (10 \angle -90)$

So, $\bar{V} = \bar{V}_R + \bar{V}_L + \bar{V}_C$

$= (10 \angle 0) + (15 \angle 90) + (10 \angle -90)$

or $\bar{V} = (10 + j0) + (0 + j15) + (0 - j10)$

or $\bar{V} = (10 + j5)$ V

or $\bar{V} = (11.18 \angle 26.565)$ V

Example 2.48 A resistance *R* and inductance $L = 0.01$ H and a capacitance *C* are connected in series. When a voltage $v = 400 \sin (3000t - 10°)$ V is applied to the series combination, the current flowing is $10\sqrt{2} \cos (3000t - 55°)$ A. Find *R* and *C*.

Solution

The conditions given in the example are shown in Fig. 2.91.

Given:

$$v = 400 \sin (3000t - 10)$$

$$i = 10\sqrt{2} \cos (3000t - 55)$$

Converting the given quantities into standard sinusoidal forms, we get

$$v = 400 \sin (3000t - 10)$$

$$i = 10\sqrt{2} \sin (3000t + 35)$$

Converting the standard sinusoidal forms into polar forms, we get

$$\bar{V} = (282.84 \angle -10) \text{ V}$$

$$\bar{I} = (10 \angle 35) \text{ A}$$

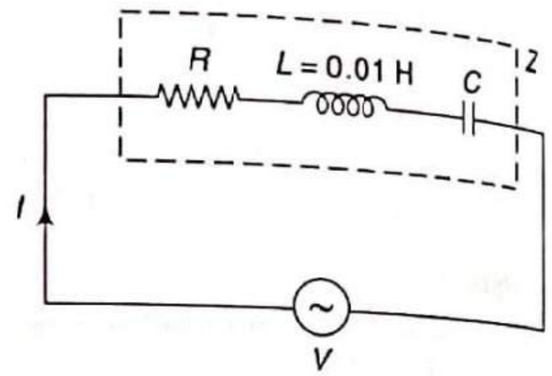

Fig. 2.91

Circuit impedance,

$$\bar{Z} = \frac{\bar{V}}{\bar{I}} = \frac{(282.84 \angle -10)}{(10 \angle 35)}$$

$$= (28.284 \angle -45) \ \Omega$$

$$= (20 - j20) \ \Omega$$

It is given that the current leads the applied voltage. Therefore, circuit is capacitive, i.e., $X_C > X_L$.

Now, from rectangular form of impedance,

$$R = 20 \ \Omega, X_C - X_L = 20 \ \Omega$$

But $X_L = \omega L = 3000 \times 0.01 = 30 \ \Omega$

So, $X_C = 50 \ \Omega$

As $X_C = \dfrac{1}{\omega C}$,

or $50 = \dfrac{1}{3000 \times C}$

or $C = 6.66 \times 10^{-6}$ F

$= 6.66$ μF

Alternative method:

Given: $v = 400 \sin (3000t - 10)$

So, $V = 282.84$ V

Also $i = 10\sqrt{2} \cos (3000t - 55)$

or $i = 10\sqrt{2} \sin (3000t + 35)$

So, $I = 10$ A

The current leads the applied voltage by 45°.

So, phase angle, $\phi = 45°$ and $X_C > X_L$

Circuit impedance, $Z = \dfrac{V}{I} = \dfrac{282.84}{10} = 28.284 \ \Omega$

$$\text{pf} = \cos \phi = \frac{R}{Z}$$

or $\cos 45° = \dfrac{R}{28.284}$

So, $R = \cos 45° \times 28.284 = 0.707 \times 28.284 = 20 \ \Omega$

Now,

$$Z = \sqrt{R^2 + (X_C - X_L)^2}$$

or $28.284 = \sqrt{(20)^2 + (X_C - X_L)^2}$

or $X_C - X_L = 20$

But $X_L = \omega L = 3000 \times 0.01 = 30 \ \Omega$

So, $X_C = 50$

or $\dfrac{1}{\omega C} = 50$

or $\dfrac{1}{3000 \times C} = 50$

Hence, $C = 6.66 \times 10^{-6}$ F

$= 6.66$ μF

Example 2.49 For the circuit shown in Fig. 2.92, determnine the (i) supply frequency (f), (ii) coil resistance (r), and (iii) supply voltage (V).

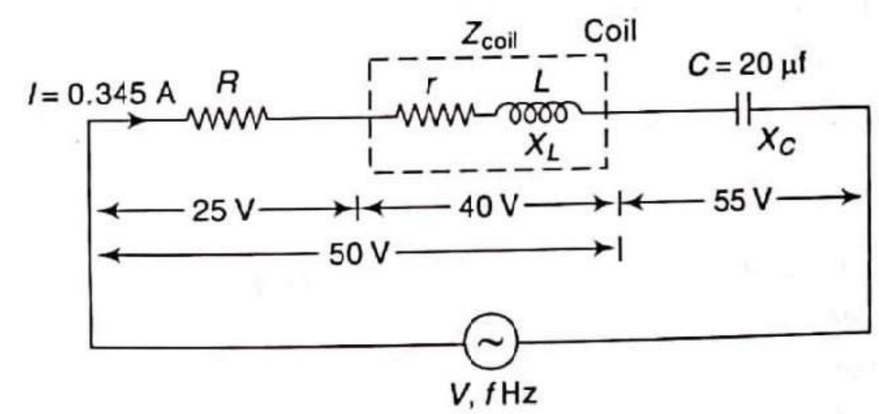

Fig. 2.92

Solution

Given: $V_R = 25$ V

$V_{coil} = 40$ V

$V_C = 55$ V

$V_{R+coil} = 50$ V

$I = 0.345$ A

$C = 20$ μF

We have $V_C = IX_C$

So, $55 = 0.345 \times X_C$

or $X_C = 159.42 \ \Omega$

or $\dfrac{1}{2\pi f C} = 159.42$

or $\dfrac{1}{2\pi \times f \times 20 \times 10^{-6}} = 159.42$

or $f = 50$ Hz

$$R = \frac{V_R}{I} = \frac{25}{0.345} = 72.46\ \Omega$$

$$Z_{coil} = \frac{V_{coil}}{I} = \frac{40}{0.345} = 115.94\ \Omega$$

$$Z_{R+coil} = \frac{V_{R+coil}}{I} = \frac{50}{0.345} = 144.93\ \Omega$$

Now, $Z_{R+coil} = \sqrt{(R+r)^2 + X_L^2}$

or $(144.93)^2 = (R+r)^2 + X_L^2$

or $(144.93)^2 = R^2 + 2Rr + r^2 + X_L^2$

or $(144.93)^2 = R^2 + 2Rr + Z_{coil}^2 \quad (\because r^2 + X_L^2 = Z_{coil}^2)$

or $(144.93)^2 = (72.46)^2 + 2 \times 72.46 \times r + (115.94)^2$

So, $r = 15.95\ \Omega$

$$Z_{coil}^2 = r^2 + X_L^2$$

or $(115.94)^2 = (15.95)^2 + X_L^2$

or $X_L = 114.84\ \Omega$

Total impedance of the circuit,

$$Z = \sqrt{(R+r)^2 + (X_C - X_L)^2}$$

$$= \sqrt{(72.46 + 15.95)^2 + (159.42 - 114.84)^2}$$

$$= 99\ \Omega$$

Supply voltage,

$$V = IZ$$

$$= 0.345 \times 99 = 35.046\ \text{V}$$

Example 2.50 A coil connected to a 100 V dc supply draws 10 A current and the same coil when connected a 100 V ac voltage of frequency 50 Hz draws 5 A current. Calculate the parameters of the coil and power factor.

Solution

Case (i) When the coil is connected to 100 V dc supply:

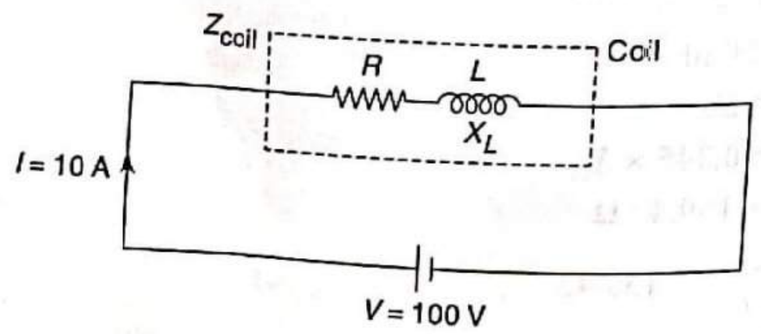

Fig. 2.93

When the coil is connected across dc supply, the inductive reactance (X_L) is zero.

So, $R = \frac{V}{I} = \frac{100}{10} = 10\ \Omega$

Case (ii) When the coil is connected to 100 V ac supply of frequency 50 Hz:

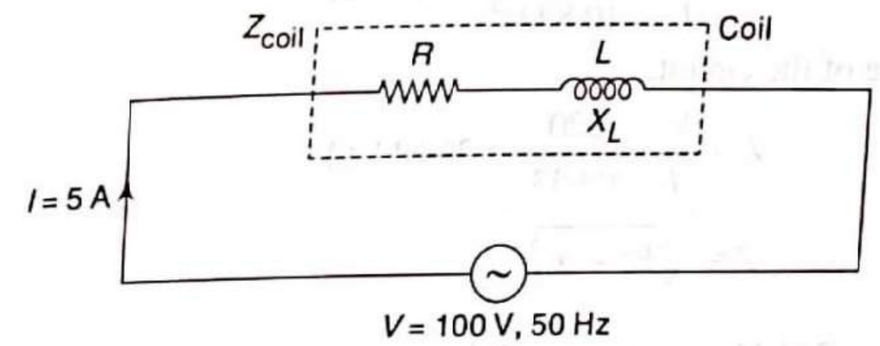

Fig. 2.94

When the coil is connected across ac supply, the reactance comes into existance.

So, $Z_{coil} = \frac{V}{I} = \frac{100}{5} = 20\ \Omega$

Now,

$$Z_{coil} = \sqrt{R^2 + X_L^2}$$

$\therefore$ $20 = \sqrt{(10)^2 + X_L^2}$

$\therefore$ $X_L = 17.32\ \Omega$

So, $2\pi f L = 17.32$

$2\pi \times 50 \times L = 17.32$

$L = 55.13 \times 10^{-3}$ H

or $L = 55.13$ mH

Now, power factor of the coil:

$$\cos\phi = \frac{R}{Z} = \frac{10}{20} = 0.5 \text{ lagging}$$

Example 2.51 A 120 V, 100 W lamp is to be connected to a 220V, 50 Hz ac supply. What value of pure inductance should be connected in series in order to run the lamp on the rated voltage?

Solution

The conditions of the example are shown in Fig. 2.95.

The value of L is required so that the lamp is run on the rated voltage, i.e. 120 V. The lamp is considered as resistive load. Let the resistance of lamp is $R\ \Omega$.

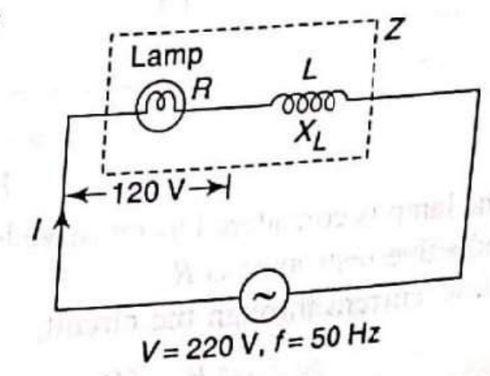

Fig. 2.95

Now, current drawn by the lamp,

$$I = \frac{P}{V} = \frac{100}{120} = 0.833 \text{ A}$$

Resistance of lamp,

$$R = \frac{P}{I^2} = \frac{100}{(0.833)^2} = 144\ \Omega$$

So, impedance of the circuit,

$$Z = \frac{V}{I} = \frac{220}{0.833} = 264.11\ \Omega$$

We have, $Z = \sqrt{R^2 + X_L^2}$

or $264.11 = \sqrt{(144)^2 + X_L^2}$

or $X_L = 221.4\ \Omega$

or $2\pi fL = 221.4$

$2\pi \times 50 \times L = 221.4$

$L = 0.705$ H

Example 2.52 A 120 V, 60 W metal filament lamp is to be operated on 220 V, 50 Hz supply mains. Calculate the value of

(i) Non-inductive resistance

(ii) Pure-inductance

that would be required in order to run the lamp on correct voltage. Which method is preferable and why?

Solution

Lamp ratings: 120 V, 60 W

Supply voltage: 220V, 50 Hz

(i) Value of non-inductive resistance (R):

Let a non-inductive resistance (R) be connected in series with the lamp, so that it runs on correct voltage (Fig. 2.96).

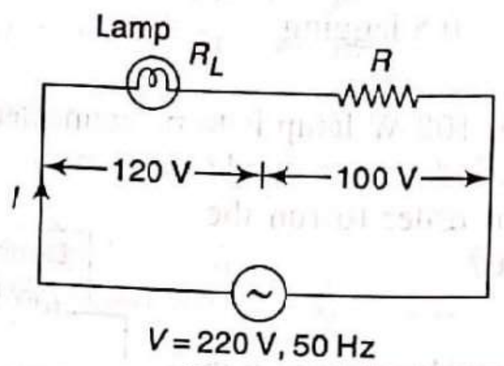

Fig. 2.96

The lamp is considered as resistive load having resistance R_L. The value of non-inductive resistance is R.

Now, current through the circuit,

$$I = \frac{P}{V} = \frac{60}{120} = 0.5 \text{ A}$$

So, $R = \frac{100}{0.5} = 200\ \Omega$

(ii) Value of pure-inductance:

Let pure-inductance L H is connected in series with the lamp so that it runs on correct voltage (Fig. 2.97).

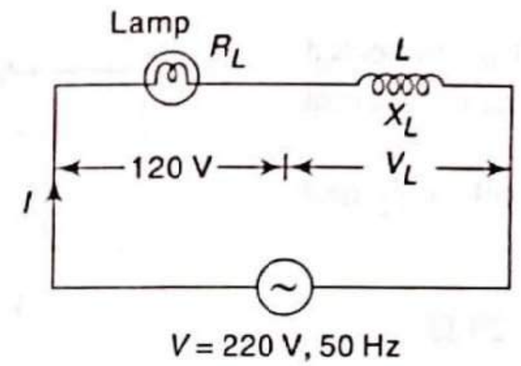

Fig. 2.97

From the circuit diagram,

$$V = \sqrt{(120)^2 + V_L^2}$$

$$220 = \sqrt{(120)^2 + V_L^2}$$

$\therefore\ V_L = 184.39$ V

Circuit current, $I = 0.5$ A

So, $X_L = \frac{V_L}{I} = \frac{184.39}{0.5} = 368.78\ \Omega$

i.e., $2\pi fL = 368.78$

$$\therefore\quad L = \frac{368.78}{2\pi f} = \frac{368.78}{2\pi \times 50} = 1.1739 \text{ H}$$

The method of connecting a pure inductance in series with the lamp is preferable because a pure inductance does not consume any power.

Example 2.53 When a coil is connected to a 114 V, 60 Hz source, the current is 3 A. The current rises to 4 A when 116 V, 25 Hz source is connected to the same coil. Determine the value of the resistance and inductance of the coil.

Solution

Case (i) When the coil is connected across 114 V, 60 Hz source, the current is 3 A [Fig. 2.98].

Let the impedance of the coil is Z_1 and reactance is X_{L1}.

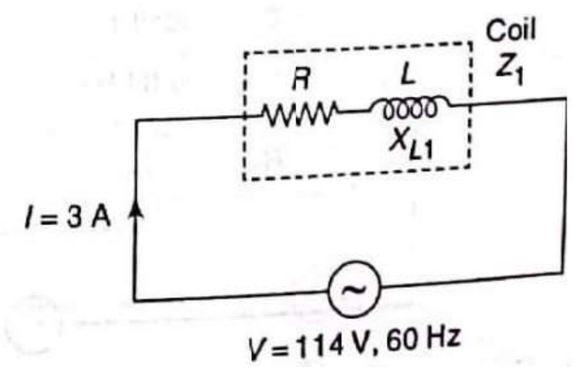

Fig. 2.98

So, $Z_1 = \frac{V}{I} = \frac{114}{3} = 38\ \Omega$

We have,

$$Z_1 = \sqrt{R^2 + X_{L1}^2}$$

$$Z_1^2 = R^2 + (2\pi fL)^2$$

$$(38)^2 = R^2 + (2\pi \times 60 \times L)^2 \quad \text{(i)}$$

Case (ii) When the coil is connected across 116 V, 25 Hz source, the current is 4 A. (Fig. 2.99)

Let the impedance of coil is Z_2 and reactance is X_{L2}.

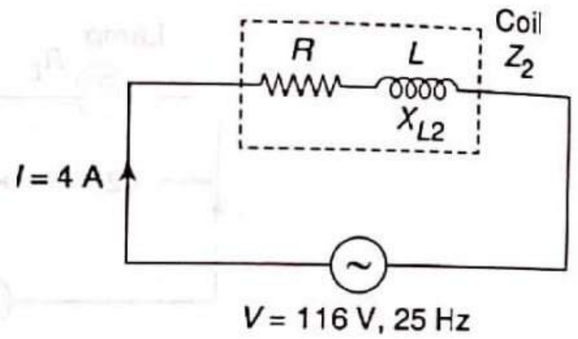

Fig. 2.99

So, $$Z_2 = \frac{V}{I} = \frac{116}{4} = 29\ \Omega$$

We have,

$$Z_2 = \sqrt{R^2 + X_{L2}^2}$$

$$Z_2^2 = R^2 + (2\pi fL)^2$$

$$(29)^2 = R^2 + (2\pi \times 25 \times L)^2 \quad \text{(ii)}$$

Eq. (i) – Eq. (ii),

$$(38)^2 - (29)^2 = R^2 + (2\pi \times 60 \times L)^2 - R^2 - (2\pi \times 25 \times L)^2$$

$$L = 0.07165 \text{ H}$$

or $$L = 71.65 \text{ mH}$$

So, $$R = 26.71\ \Omega$$

Example 2.54 An inductive coil having inductance of 0.04 H and resistance of 25 Ω has been connected in series with another inductive coil of inductance 0.2 H and resistance 15 Ω. The whole circuit has been energized from 230 V, 50 Hz mains. Calculate power dissipation of each coil and power factor of the whole circuit.

Solution

The given conditions are shown in Fig. 2.100.

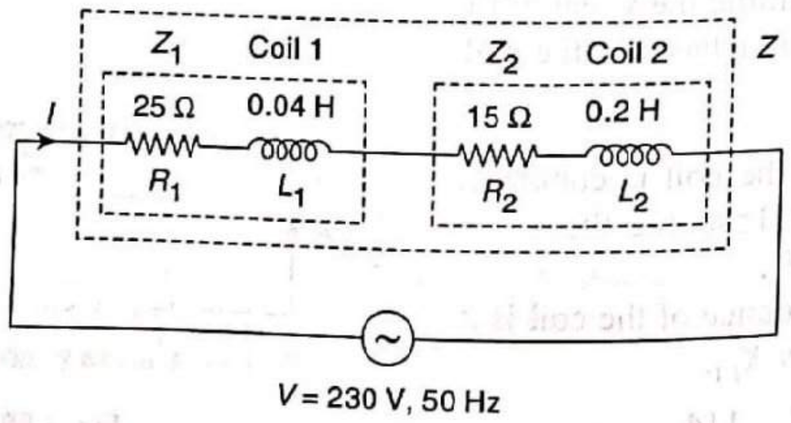

Fig. 2.100

Let the two coils are coil 1 and coil 2.

Given: $R_1 = 25\ \Omega$
$L_1 = 0.04$ H
$R_2 = 15\ \Omega$
$L_2 = 0.2$ H
$V = 230$ V
$f = 50$ Hz

Taking applied voltage as reference,

$$\bar{V} = (230\ \angle 0)\ \text{V}$$

Now, $X_{L1} = 2\pi fL_1 = 2\pi \times 50 \times 0.04 = 12.57\ \Omega$
$X_{L2} = 2\pi fL_2 = 2\pi \times 50 \times 0.2 = 62.83\ \Omega$

Total resistance, $R = R_1 + R_2 = 25 + 15 = 40\ \Omega$

Total inductive reactance, $X_L = X_{L1} + X_{L2} = 12.57 + 62.83 = 75.4\ \Omega$

So, impedance of circuit, $\bar{Z} = (40 + j75.4)\ \Omega$

$$\bar{Z} = (85.35\ \angle 62.05)\ \Omega$$

Circuit current, $$\bar{I} = \frac{\bar{V}}{\bar{Z}}$$

$$\therefore \quad \bar{I} = \frac{(230\ \angle 0)}{(85.35\ \angle 62.05)\text{A}}$$

$$\therefore \quad \bar{I} = (2.695\ \angle -62.05)\ \text{A}$$

Now, power dissipation in coil1,

$$P_1 = I^2 \times R_1 = (2.695)^2 \times 25 = 181.57\ \text{W}$$

Power dissipation in coil 2,

$$P_2 = I^2 \times R_2 = (2.695)^2 \times 15 = 108.95\ \text{W}$$

Now, phase angle of circuit, $\phi = 62.05$

∴ Power factor of circuit,

pf = cos 62.05 = 0.4687 lagging.

Example 2.55 A load consisting of a capacitor in series with a resistor has an impedance of 50 Ω and pf 0.707 leading. The load is connected in series with 40 Ω resistor across ac supply and the resulting current is 3 A. Determine the supply voltage and the overall phase angle.

Solution

The given conditions are shown in Fig. 2.101.

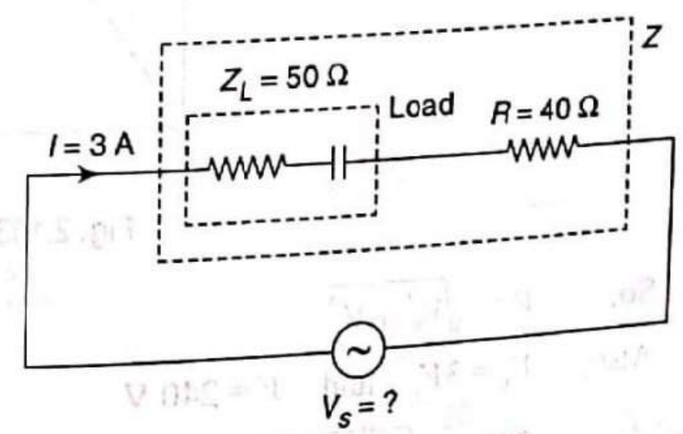

Fig. 2.101

Now, $Z_L = 50\ \Omega$ (given)

Since, pf = 0.707 leading, $\phi = 45°$

So, $\bar{Z}_L = (50\ \angle -45)\ \Omega$

$$\therefore \quad \bar{Z}_L = (35.36 - j35.36)\ \Omega$$

Thus, resistance of load = 35.36 Ω
Capacitive reactance of load = 35.36 Ω
Now, total impedance of the circuit,

$$\bar{Z} = [(35.36 + 40) - j35.36]\ \Omega$$

$$\therefore \quad \bar{Z} = (75.36 - j35.36)\ \Omega$$

$$\therefore \quad \bar{Z} = (83.24\ \angle -25.14)\ \Omega$$

Hence, the source voltage is given by

$$V_s = IZ = 3 \times 83.24 = 249.72 \text{ V}$$

Overall phase angle, $\phi = 25.14°$

Example 2.56 For a circuit given in Fig. 2.102, $V_x = 3V_y$ and V_x and V_y are in quadrature. Determine the values of (i) R and C and (ii) phase relationship between V, V_x, V_y, and I.

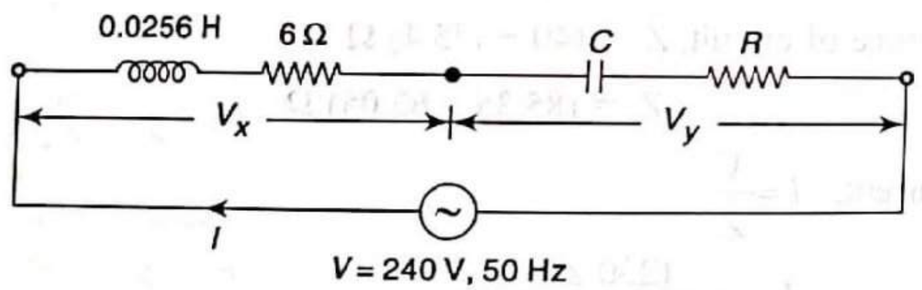

Fig. 2.102

Solution

Given :

$V_x = 3V_y$, $V = 240$ V, $f = 50$ Hz, V_x and V_y are in quadrature.

Calculation of V_x and V_y :

V_x and V_y, are in quadrature as shown in Fig. 2.103. The resultant voltage is V.

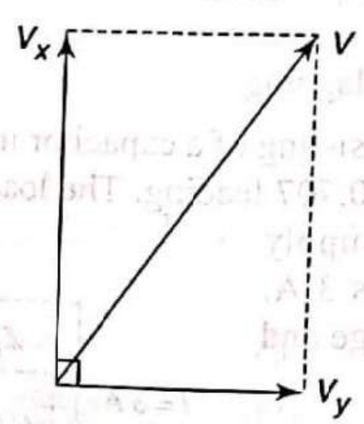

Fig. 2.103

So, $\quad V = \sqrt{V_x^2 + V_y^2}$

Also, $\quad V_x = 3V_y$ and $V = 240$ V

$$\therefore \quad 240 = \sqrt{(3V_y)^2 + V_y^2}$$

$$\therefore \quad V_y = 75.89 \text{ V}$$

So, $\quad V_x = 3V_y = 227.67$ V

Calculation of current I, Z_x, and Z_y:

Marking the different impedances in Fig. 2.102, we get the circuit as follows,

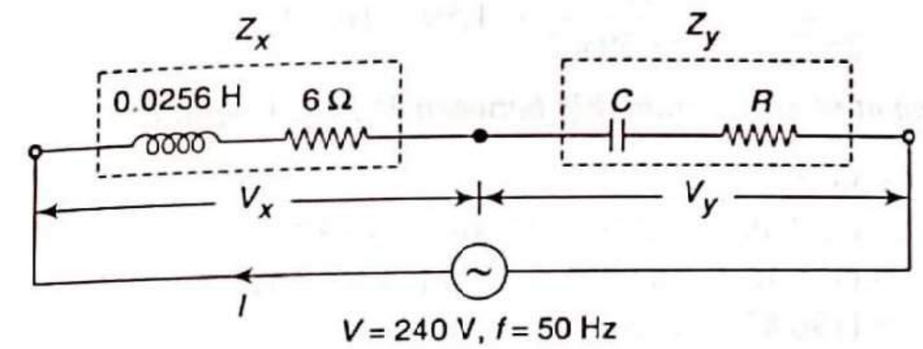

Fig. 2.104

Now, $\bar{Z}_x = [6 + j(2\pi \times 50 \times 0.0256)]\ \Omega$

$$\bar{Z}_x = (6 + j8.04)\ \Omega$$

$$\bar{Z}_x = (10.03\ \angle 53.27)\ \Omega$$

i.e., $\quad Z_x = 10.03\ \Omega$

So, circuit current, $I = \dfrac{V_x}{Z_x} = \dfrac{227.67}{10.03} = 22.7$ A

Hence, $\quad Z_y = \dfrac{V_y}{I} = \dfrac{75.89}{22.7} = 3.34\ \Omega$

Calculation of R and C:

Let the circuit current I is a reference quantity.

$$\therefore \quad \bar{I} = (22.7\ \angle 0) \text{ A}$$

So, $\quad \bar{V}_x = \bar{I}\, Z_x$

$$= (22.7\ \angle 0)\ (10.03\ \angle 53.27)$$

$$= (227.68\ \angle 53.27) \text{ V}$$

Since V_x and V_y are in quadrature and V_y is voltage across a capacitive circuit, we assume that, V_y lags V_x by 90° as shown in Fig. 2.105.

So, phase angle of $V_y = 53.13 - 90 = -36.87°$

So, $\quad \bar{V}_y = (75.89\ \angle -36.87)$ V

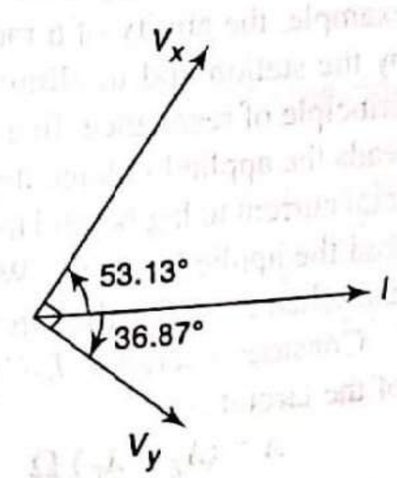

Fig. 2.105

Now, $\quad \bar{Z}_y = \dfrac{\bar{V}_y}{\bar{I}} = \dfrac{(75.89\angle -36.87)}{(22.7\angle 0)}$

$$\bar{Z}_y = (3.34\ \angle -36.87)\ \Omega$$

So, $\quad \bar{Z}_y = (2.67 - j2)\ \Omega$

Hence, $R = 2.67\ \Omega$; $X_C = 2\ \Omega$

As, $$X_C = \frac{1}{2\pi fC}$$

$$\therefore \quad C = \frac{1}{2\pi f X_C} = \frac{1}{2\pi \times 50 \times 2} = 1.59 \times 10^{-3}\ \text{F}$$

Calculation of phase relationship between V_x, V_y, V, and I:

$$\bar{V} = \bar{V}_x + \bar{V}_y$$
$$= (227.68\ \angle 53.27) + (75.89\ \angle -36.87)$$
$$= (136.16 + j182.48) + (60.71 - j45.53)$$
$$= (196.87 + j136.95)$$

So, $= (240\ \angle 34.82)$ V

Figure 2.106 shows the complete phasor diagram showing the relation between V_x, V_y, V, and I.

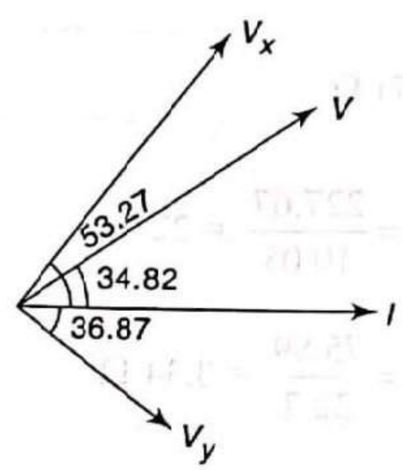

Fig. 2.106

2.2.5 Series Resonance

In many electrical circuits, resonance is very important phenomenon. The study of resonance is very useful, particularly in the area of communications. For example, the ability of a radio receiver to select a certain frequency transmitted by the station and to eliminate frequencies from other stations is based on the principle of resonance. In a series *R-L-C* circuit, the current either lags behind or leads the applied voltage depending upon the values of X_L and X_C. X_L causes the total current to lag behind the applied voltage, while X_C causes the total current to lead the applied voltage. When $X_L > X_C$, the circuit is predominantly inductive, and when $X_C > X_L$, the circuit is predominantly capacitive.

Consider a series *R-L-C* circuit as shown in Fig. 2.107(a). The net reactance of the circuit is

$$X = (X_L - X_C)\ \Omega$$

where $X_L = 2\pi fL\ \Omega$ and $X_C = \dfrac{1}{2\pi fC}\ \Omega$

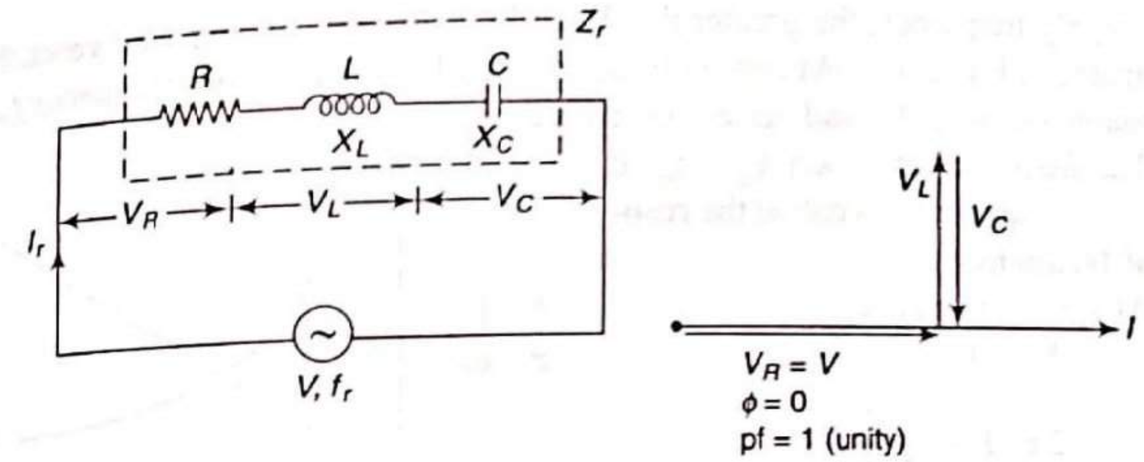

(a) Circuit diagram (b) Phasor diagram

Fig. 2.107 Series resonance

The inductive reactance is directly proportional to the supply frequency, whereas the capacitive reactance is inversely proportional to the supply frequency. At a certain supply frequency, called resonance frequency (f_r), the inductive reactance becomes equal to the capacitive reactance, and the net reactance (X) becomes zero. Therefore, impedance (Z) of the circuit becomes purely resistive (i.e., $Z = R$). In other words, the whole circuit behaves as a purely resistive circuit and the current remains in phase with the applied voltage (pf = 1). This condition is said to be the condition for electrical resonance. Figure 2.107(b) shows the phasor diagram at resonance.

A circuit containing reactive elements (L and C) is resonant when the circuit power factor is unity, i.e., the applied voltage and the circuit current are in phase. If such condition occurs in a series circuit, it is termed as **series resonance.**

For a series resonance, the circuit power factor must be unity, which is possible only if the net reactance of the circuit is zero, i.e., $X_L - X_C = 0$ or $X_L = X_C$.

Effects of series resonance

1. The net reactance of the circuit is zero. Therefore, impedance of the circuit is minimum and is equal to the resistance of the circuit, i.e., $Z_r = R\ \Omega$.
2. The current in the circuit is maximum as it is limited by the resistance of the circuit alone. So, $I_r = \dfrac{V}{Z_r} = \dfrac{V}{R}$
3. As the current is at its maximum value, the power absorbed by the circuit will also be at its maximum value.
4. Since at series resonance, the current flowing in the circuit is very large, the voltage drop across L and C are also very large. In fact, these drops are much greater than the applied voltage. However, voltage drop across *L-C* combination as a whole will be zero because these drops are equal in magnitude but 180° out of phase with each other.

Resonant frequency (f_r)

The series resonance (i.e., $X_L = X_C$) can be achieved by changing the supply frequency because X_L ($=2\pi fL$) and X_C ($=1/2\pi fC$) are frequency dependent. Higher

the supply frequency, the greater the X_L and smaller the X_C and vice versa. This indicated in Fig. 2.108. At certain frequency, called the resonant frequency f_r, X_L becomes equal to X_C and series resonance occurs.

The frequency at which $X_L = X_C$ in a *R-L-C* series circuit is called the **resonant frequency** f_r.

At series resonance,

$$X_L = X_C$$

or $$2\pi f_r L = \frac{1}{2\pi f_r C}$$

So, $$f_r^2 = \frac{1}{4\pi^2 LC}$$

or $$f_r = \frac{1}{2\pi\sqrt{LC}} \text{ hertz} \quad (2.12)$$

or $$2\pi f_r = \frac{1}{\sqrt{LC}}$$

Hence, $$\omega_r = \frac{1}{\sqrt{LC}} \text{ rad/sec} \quad (2.13)$$

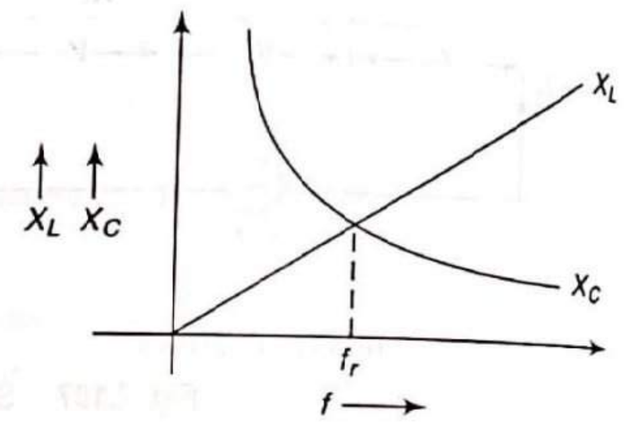

Fig. 2.108 Variation of reactances with frequency

Resonance curve

The curve between current and frequency is known as **resonance curve**. Figure 2.109 shows the resonance curve of the typical *R-L-C* series circuit. Note that current reaches at its maximum value at the resonant frequency (f_r), falling off rapidly on either side at that point. It is because if the frequency is below f_r, $X_C > X_L$ and the net reactance is no longer zero. If the frequency is above f_r, then $X_L > X_C$ and the net reactance is again not zero. In both the cases, the circuit impedance will be more than the impedance Z_r (=R) at resonance.

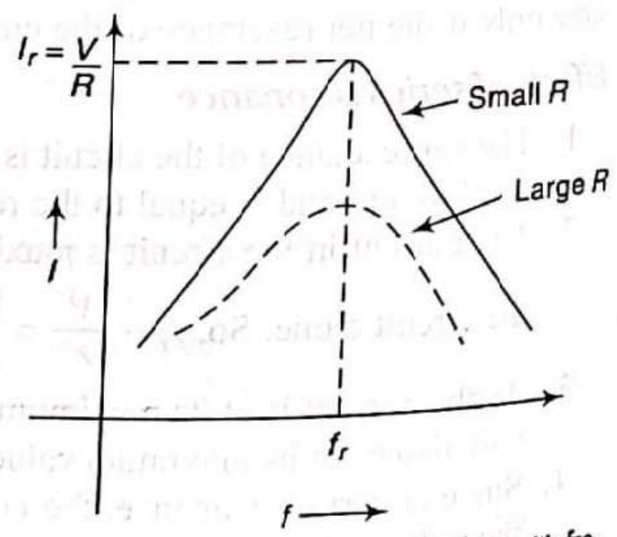

Fig. 2.109 Variation of circuit current with frequency

The result is that the magnitude of the circuit current decreases rapidly as the frequency changes from the resonant frequency.

The shape of the resonance curve depends upon the value of resistance (R). The smaller the resistance, the greater the current at resonance and sharper the curve. On the other hand, the greater the resistance, the lower the resonant peak and flatter the curve.

Q-factor of series resonance circuit

At series resonance, the voltage drops across L or C are very large. In fact, these drops are much greater than the applied voltage. This voltage magnification produced by resonance is termed as Q-factor of the series resonant circuit (Q stands for quality), i.e.,

$$Q\text{-factor} = \frac{\text{Voltage across } L \text{ or } C}{\text{Applied voltage}} \quad (2.14)$$

$$= \frac{V_L \text{ or } V_C}{V}$$

$$= \frac{V_L}{V_R} \quad (\because \text{ At resonance, } V = V_R)$$

$$= \frac{I_r X_L}{I_r R}$$

$$= \frac{X_L}{R}$$

So, $$Q\text{-factor} = \frac{2\pi f_r L}{R} \quad (2.15)$$

We know that $$f_r = \frac{1}{2\pi\sqrt{LC}}$$

Substituting the value of f_r in Eq. (2.15), we get

$$Q\text{-factor} = \frac{1}{R}\sqrt{\frac{L}{C}} \quad (2.16)$$

Bandwidth of series resonance circuit

Bandwidth (BW) of a series resonance circuit is defined as the range of frequency over which circuit current is equal to or greater than 70.7% of maximum current (i.e., I_r, current at resonance).

The current in series *R-L-C* circuit changes with frequency. Referring to the resonance curve in Fig. 2.110, it is clear that for any frequency lying between f_1 and f_2, the circuit current is equal to or greater than 70.7% of maximum current (i.e., $I_r = V/R$). Therefore, ($f_2 - f_1$) is the bandwidth of the circuit, i.e.,

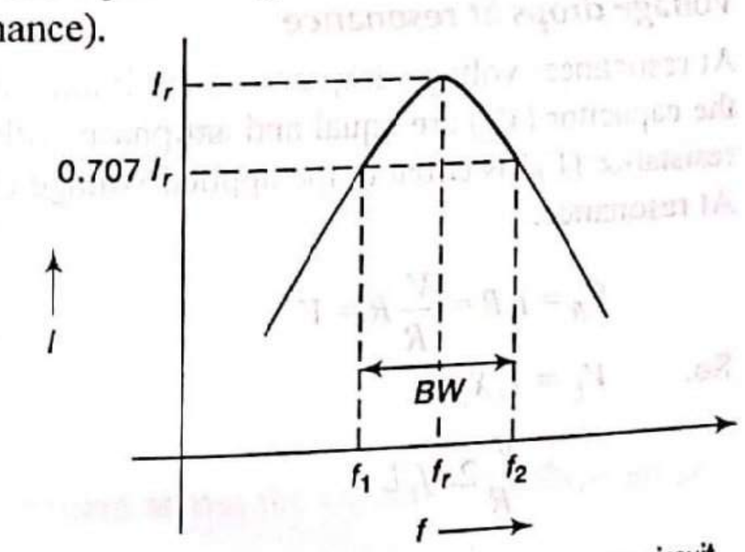

Fig. 2.110 Bandwidth of series resonance circuit

Bandwidth, BW = ($f_2 - f_1$) Hz

or $$\text{BW} = (\omega_2 - \omega_1) \text{ rad/sec} \quad (2.17)$$

It can be proved that, for a series resonance circuit,

$$\text{BW} = \frac{R}{2\pi L}\ \text{Hz} \tag{2.18}$$

or $$\text{BW} = \frac{R}{L}\ \text{rad/sec}$$

Note that f_1 and f_2 are the limiting frequencies at which current is exactly equal to 70.7% of the maximum value. The frequency f_1 is called lower cut-off frequency and the frequency f_2 is called upper cut-off frequency. The resonant frequency is sufficiently centred w.r.t. the two cut-off frequencies (f_1 and f_2). Then

$$f_2 = f_r + \frac{\text{BW}}{2} \tag{2.19}$$

$$f_1 = f_r - \frac{\text{BW}}{2}$$

In case of angular frequency (ω), we have

$$\omega_2 = \omega_r + \frac{\text{BW}}{2}$$

$$\omega_1 = \omega_r - \frac{\text{BW}}{2} \tag{2.20}$$

Relation between Q-factor and bandwidth (BW)

We know that

$$Q\text{-factor} = \frac{2\pi f_r L}{R}$$

or $$Q\text{-factor} = \frac{2\pi L}{R} f_r$$

or $$Q\text{-factor} = \frac{f_r}{BW} \qquad \left(\because \frac{2\pi L}{R} = \frac{1}{\text{BW}}\right)$$

or $$f_r = Q\text{-factor} \times \text{BW} \tag{2.21}$$

Voltage drops at resonance

At resonance, voltage drop across the inductance (V_L) and voltage drop across the capacitor (V_C) are equal and antiphase with each other. The drop across the resistance (V_R) is equal to the applied voltage (V).

At resonance,

$$V_R = I_r R = \frac{V}{R} R = V \tag{2.22}$$

So, $$V_L = I_r X_L$$

$$= \frac{V}{R} 2\pi f_r L$$

$$= \frac{V}{R} 2\pi \frac{1}{2\pi\sqrt{LC}} L \qquad \left(\because f_r = \frac{1}{2\pi\sqrt{LC}}\right)$$

$$= \frac{V}{R}\sqrt{\frac{L}{C}} \tag{2.23}$$

Also $$V_C = I_r X_C$$

$$= \frac{V}{R} \cdot \frac{1}{2\pi f_r C}$$

$$= \frac{V}{R} \cdot \frac{1}{2\pi \frac{1}{2\pi\sqrt{LC}} C} \qquad \left(\because f_r = \frac{1}{2\pi\sqrt{LC}}\right)$$

$$= \frac{V}{R}\sqrt{\frac{L}{C}} \tag{2.24}$$

Example 2.57 A series R-L-C circuit has the following parameter values: $R = 10\ \Omega$, $L = 0.014$ H, $C = 100\ \mu$F.

Compute the following:

(a) Resonance frequency in rad/sec
(b) Quality factor of the circuit
(c) Bandwidth
(d) Lower and upper frequency points of the bandwidth
(e) Maximum value of the voltage appearing across the capacitor if the voltage $v = 1\sin 1000t$ is applied to the R-L-C circuit.

Solution

(a) $$\omega_r = \frac{1}{\sqrt{LC}} = \frac{1}{\sqrt{0.014 \times 100 \times 10^{-6}}} = 845.15\ \text{rad/sec}$$

(b) $$Q = \frac{1}{R}\sqrt{\frac{L}{C}} = \frac{1}{10}\sqrt{\frac{0.014}{100 \times 10^{-6}}} = 1.183$$

(c) $$\text{BW} = \frac{R}{L} = \frac{10}{0.014} = 714.29\ \text{rad/sec}$$

(d) Lower and upper frequency points of the bandwidth

$$\omega_1 = \omega_r - \frac{\text{BW}}{2} = 845.15 - \frac{714.29}{2} = 488\ \text{rad/sec}$$

$$\omega_2 = \omega_r + \frac{\text{BW}}{2} = 845.15 + \frac{714.29}{2} = 1202.3\ \text{rad/sec}$$

(e) Applied voltage, $v_1 = 1 \sin 1000t$

So, $$V = \frac{V_m}{\sqrt{2}} = \frac{1}{\sqrt{2}} = 0.707$$

At resonance, voltage that appears across the capacitor is maximum and given by

$$V_C = \frac{V}{R}\sqrt{\frac{L}{C}} = \frac{0.707}{10}\sqrt{\frac{0.014}{100 \times 10^{-6}}} = 0.837\ \text{V}$$

Example 2.58 A voltage of $v = 10 \sin \omega t$ is applied to R-L-C circuit. At the resonance frequency of the circuit, the maximum voltage across the capacitor is found to be 500 V. Moreover, the bandwidth is known to be 400 rad/sec. and impedance at resonance is 100 Ω.

(i) Find the resonant frequency.
(ii) Compute the upper and lower limits of the bandwidth.
(iii) Determine the value of L and C for this circuit.

Solution

A voltage of $v = 10 \sin \omega t$ is applied to *R-L-C* circuit as shown in Fig. 2.111.

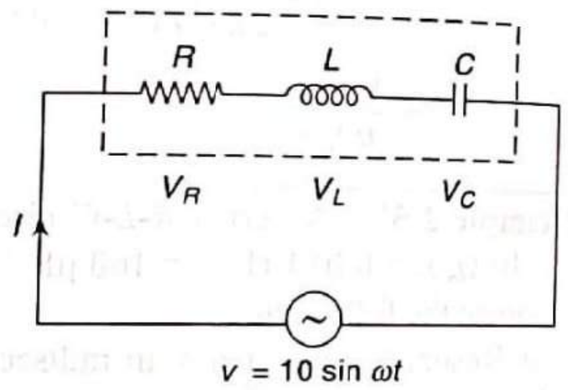

Fig. 2.111

Given: $v = 10 \sin \omega t$

RMS value of the applied voltage,

$$V = \frac{10}{\sqrt{2}} = 7.071 \text{ V}$$

At resonance, $V_C = 500$ V

Bandwidth, BW = 400 rad/sec

or $$\text{BW} = \frac{400}{2\pi} = 63.66 \text{ Hz}$$

Impedance at resonance, $Z_r = R = 100\ \Omega$

(i) $$Q\text{-factor} = \frac{V_C}{V} = \frac{500}{7.071} = 70.71$$

Resonance frequency, $f_r = \text{BW} \times Q\text{-factor}$
$= 63.66 \times 70.71$
$= 4501.4$ Hz

(ii) Lower limit of the bandwidth,

$$f_1 = f_r - \frac{\text{BW}}{2} = 4501.4 - \frac{63.66}{2} = 4469.57 \text{ Hz}$$

Now, upper limit of the bandwidth

$$f_2 = f_r + \frac{\text{BW}}{2} = 4501.4 + \frac{63.66}{2} = 4533.23 \text{ Hz}$$

(iii) $$\text{BW} = \frac{R}{2\pi L} \text{ Hz}$$

or $$63.66 = \frac{100}{2\pi \times L}$$

or $L = 0.25$ H

Now, $$f_r = \frac{1}{2\pi\sqrt{LC}}$$

So, $$4501.4 = \frac{1}{2\pi\sqrt{0.25 \times C}}$$

or $C = 5 \times 10^{-9}$ F

or $C = 5$ nF

Example 2.59 A constant voltage of a frequency of 1 MHz is applied to a coil (inductor) in series with a variable capacitor. When the capacitor is set to 500 pF, the current has its maximum value, while it is reduced to one half when the capacitance is 600 pF. Find (i) the resistance of the coil, (ii) the inductance of the coil, and (iii) the Q-factor of the circuit.

Solution

A coil (inductor) is connected in series to a variable capacitor. The resultant circuit is a series *R-L-C* circuit (see Fig. 2.112).

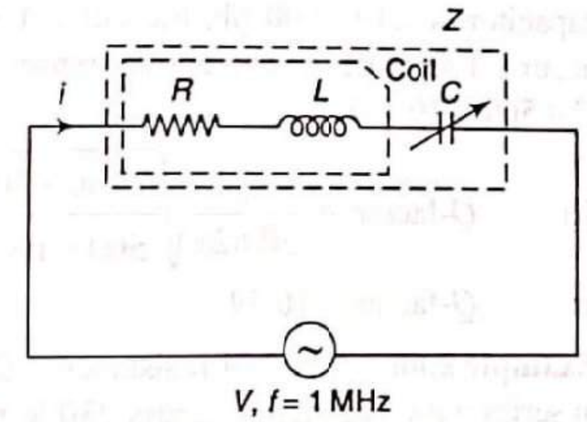

Fig. 2.112

Case (a) When $C = 500$ pF, current has its maximum value, i.e., series resonance occurs.

At series resonance,

Circuit current, $$I_r = \frac{V}{R}$$

At series resonance,

$$X_L = X_C$$

So, $$X_L = \frac{1}{2\pi f C} = \frac{1}{2\pi \times 1 \times 10^6 \times 500 \times 10^{-12}}$$

or $X_L = 318.31\ \Omega$

or $2\pi f L = 318.31$

or $L = 50.66 \times 10^{-6}$ H

or $L = 50.66\ \mu$H

Case (b) When $C = 600$ pF, current reduces to one-half, i.e., circuit current = $I_r/2$. By Ohm's law, the circuit current can be written as

$$\frac{I_r}{2} = \frac{V}{Z}, \quad \text{where } Z \text{ is impedance of the circuit.}$$

So, $$\frac{I_r}{2} = \frac{V}{\sqrt{R^2 + (X_L - X_C)^2}} \qquad \left(\because Z = \sqrt{R^2 + (X_L - X_C)^2}\right)$$

or $$\frac{V}{2 \times R} = \frac{V}{\sqrt{R^2 + (X_L - X_C)^2}} \qquad \left(\because I_r = \frac{V}{R}\right)$$

or $$\frac{1}{2 \times R} = \frac{1}{\sqrt{R^2 + \left[(2\pi \times 1 \times 10^6 \times 50.66 \times 10^{-6}) - \frac{1}{(2\pi \times 1 \times 10^6 \times 600 \times 10^{-12})}\right]^2}}$$

Hence, $R = 30.623\ \Omega$

Now, Q-factor can be calculated as

$$Q\text{-factor} = \frac{1}{R}\sqrt{\frac{L}{C}}$$

The current magnification produced at resonance is known as **Q-factor**. When capacitor is set to 500 pF, the current has its maximum value, i.e., resonance occurs. Therefore, in the above expression of Q-factor, we have to substitute $C = 500 \times 10^{-12}$ F.

So, $$Q\text{-factor} = \frac{1}{30.623}\sqrt{\frac{50.66 \times 10^{-6}}{500 \times 10^{-12}}}$$

or $$Q\text{-factor} = 10.39$$

Example 2.60 A coil of resistance 2 Ω and inductance of 0.01 H is connected in series with a capacitor across 230 V mains. What must be the capacitance, in order that maximum current occurs at a frequency of 50 Hz? Find also the current and the voltage across the capacitor.

Solution

A coil is connected in series with a capacitance. The resultant circuit is a series R-L-C circuit (see Fig. 2.113).

The value of capacitance is required. So, at 50 Hz, maximum current flows in the circuit (i.e., resonance occurs in the circuit). Thus, resonant frequency, $f_r = 50$ Hz.

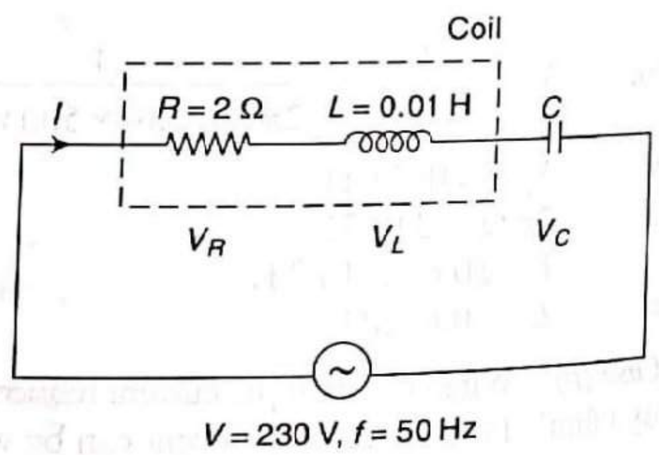

Fig. 2.113

Now, $$f_r = \frac{1}{2\pi\sqrt{LC}}$$

or $$50 = \frac{1}{2\pi\sqrt{0.01 \times C}}$$

or $$C = 1.013 \times 10^{-3}\ \text{F}$$

At resonance circuit current, $I_r = \frac{V}{R} = \frac{230}{2} = 115$ A

At resonance, voltage across the capacitor can be calculated as

$$V_C = \frac{V}{R}\sqrt{\frac{L}{C}} = \frac{230}{2}\sqrt{\frac{0.01}{1.013 \times 10^{-3}}} = 361.32\ \text{V}$$

Example 2.61 A coil of 10 Ω resistance and 0.1 H inductance is connected in series with a capacitor of 200 μF capacitance. Calculate the current, the coil voltage, and the capacitor voltage. The supply is 230 V at 50 Hz. At what frequency will the circuit resonate? Calculate the voltages at resonant frequency across the coil and the capacitor. For this, assume that the supply voltage is 230 V of variable frequency.

Solution

Case (i) A coil is connected in series with a capacitor across a supply of 230 V at 50 Hz (see Fig. 2.114).

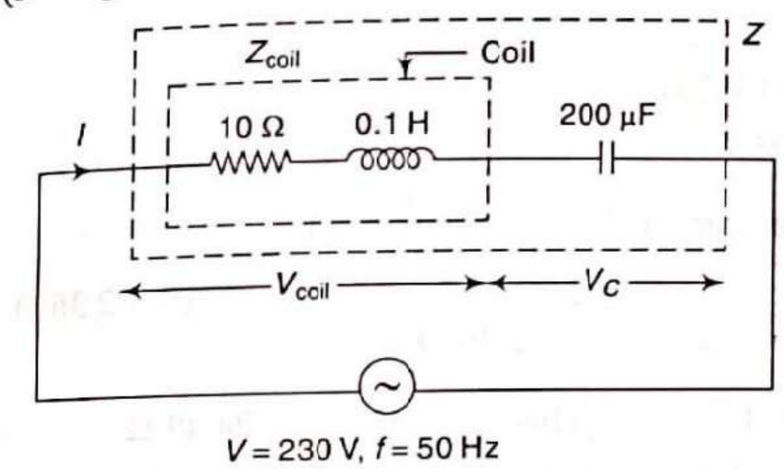

Fig. 2.114

The resulting circuit is R-L-C series circuit.

So, $X_L = 2\pi fL = 2\pi \times 50 \times 0.1 = 31.42\ \Omega$

Also, $$X_C = \frac{1}{2\pi fC} = \frac{1}{2\pi \times 50 \times 200 \times 10^{-6}} = 15.92\ \Omega$$

Hence, circuit impedance, $$Z = \sqrt{R^2 + (X_L - X_C)^2} = \sqrt{(10)^2 + (31.42 - 15.92)^2} = 18.45\ \Omega$$

By Ohm's law,

Circuit current, $$I = \frac{V}{Z} = \frac{230}{18.45} = 12.47\ \text{A}$$

Impedance of the coil, $Z_{coil} = \sqrt{R^2 + X_L^2} = \sqrt{(10)^2 + (31.42)^2} = 32.97\ \Omega$

Voltage across the coil, $V_{coil} = IZ_{coil} = 12.47 \times 32.97 = 411.14$ V

Capacitor voltage, $V_C = IX_C = 12.47 \times 15.92 = 198.52$ V

Case (ii) The supply is 230 V of variable frequency (circuit remains same) as shown in Fig. 2.115.

Let the frequency of the circuit is f_r.

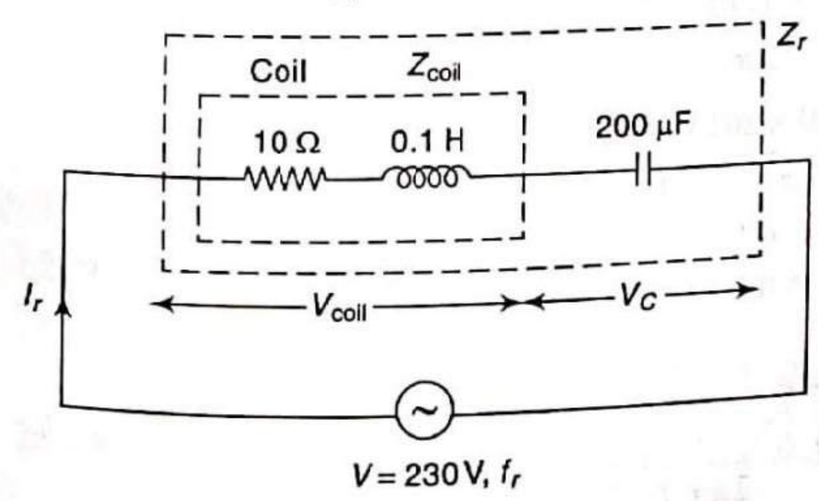

Fig. 2.115

The resonant frequency (f_r) is required. So,

$$f_r = \frac{1}{2\pi\sqrt{LC}}$$

$$= \frac{1}{2\pi\sqrt{0.1 \times 200 \times 10^{-6}}}$$

$$= 35.59 \text{ Hz}$$

At resonance, circuit current, $I_r = \frac{V}{R} = \frac{230}{10} = 23$ A

Now, inductive reactance, $X_L = 2\pi fL = 2\pi \times 35.59 \times 0.1 = 22.36\ \Omega$

At resonant frequency, $X_C = X_L = 22.36\ \Omega$

Impedance of the coil, $Z_{coil} = \sqrt{(10)^2 + (22.36)^2} = 24.49\ \Omega$

Voltage across the coil, $V_{coil} = I_r Z_{coil} = 23 \times 24.49 = 563.27$ V

Capacitor voltage, $V_C = I_r X_C = 23 \times 22.36 = 514.28$ V

Example 2.62 Determine the parameter of an *R-L-C* series circuit that will resonate at 10,000 Hz, has a bandwidth of 1000 Hz and draws 15.3 W from a 200 V supply, operating at the resonant frequency of the circuit.

Solution

At resonance, the voltage V_R (voltage drop across resistance) is equal to the applied voltage, i.e., $V_R = 200$ V.

So, $$P = \frac{V_R^2}{R}$$

or $$15.3 = \frac{(200)^2}{R}$$

or $$R = 2614.38\ \Omega$$

Quality factor of the circuit, Q-factor $= \frac{f_r}{\text{BW}} = \frac{10000}{1000} = 10$

But $$Q\text{-factor} = \frac{2\pi f_r L}{R}$$

So, $$L = \frac{Q\text{-factor} \times R}{2\pi f_r}$$

$$= \frac{10 \times 2614.38}{2\pi \times 10000}$$

$$= 0.416 \text{ H}$$

$$= 416 \text{ mH}$$

At resonance,

$$X_L = X_C$$

or $$2\pi f_r L = \frac{1}{2\pi f_r C}$$

So, $$C = \frac{1}{4\pi^2 f_r^2 L}$$

$$= \frac{1}{4\pi^2 \times (10000)^2 \times 0.416}$$

$$= 609 \times 10^{-12} \text{ F}$$

$$= 609 \text{ pF}$$

Thus, the parameters of the *R-L-C* series circuit are:

$R = 2614.38\ \Omega$

$L = 0.416$ H

$C = 609 \times 10^{-12}$ F

Example 2.63 A resistor and a capacitor are in series with a variable inductor (pure). When the circuit is connected to 220 V, 50 Hz supply, the maximum current obtainable by varying the inductance is 0.314 A. The voltage across capacitance is then 800 V. Find the circuit constants.

Solution

The conditions of the example are shown in Fig. 2.116.

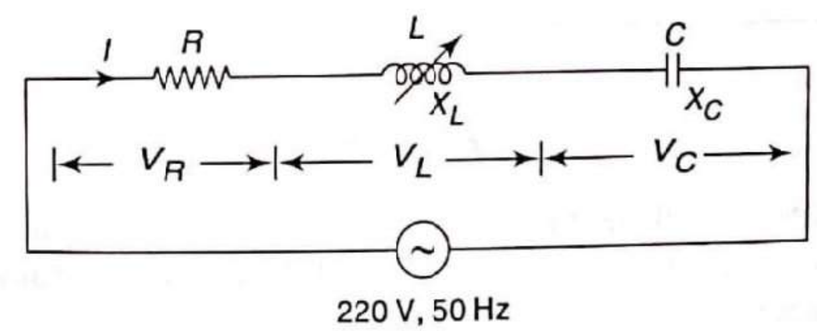

Fig. 2.116

The maximum current of a series *RLC* circuit is at resonance.

$\therefore$ $f_r = 50$ Hz and the circuit is resonated by varying inductor L.

$\therefore$ $$Z_r = \frac{V}{I_r} = \frac{220}{0.314} = 700.64\ \Omega$$

At resonance, $Z_r = R = 700.64\ \Omega$

Now, $V_C = I_r X_C$

$800 = 0.314 X_C$

$\therefore$ $X_C = 2547.77\ \Omega$

$\therefore$ $$\frac{1}{2\pi \times 50 \times C} = 2547.77$$

$\therefore$ $C = 1.249 \times 10^{-6}$ F

$\therefore$ $C = 1.249\ \mu$F

Now, $$f_r = \frac{1}{2\pi\sqrt{LC}}$$

$$\therefore \quad 50 = \frac{1}{2\pi\sqrt{L \times 1.249 \times 10^{-6}}}$$

$$\therefore \quad L = 8.11 \text{ H}$$

Example 2.64 A 20 Ω resistor is connected in series with an inductor and a capacitor, across a variable frequency, 25 V supply. When the frequency is 400 Hz, the current is at its maximum value of 0.5 A and the potential difference across the capacitor is 150 V. Calculate the resistance and inductance of the inductor.

Solution

The conditions of the example are shown in Fig. 2.117.

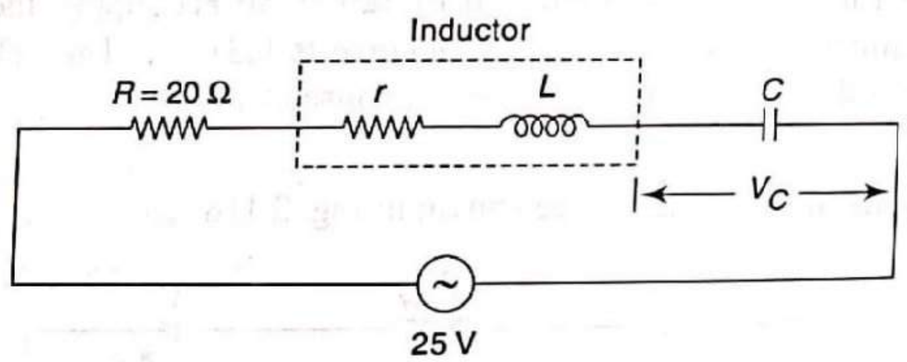

Fig. 2.117

When frequency is 400 Hz, the current is at the maximum value of 0.5 A and potential difference across the capacitor is 150 V. This is resonance condition. So, at resonance,

$$I_r = \frac{V}{(R+r)}$$

$$\therefore \quad 0.5 = \frac{25}{(R+r)}$$

$$\therefore \quad (R+r) = 50 \ \Omega$$

$$\therefore \quad (20+r) = 50$$

$$\therefore \quad r = 30 \ \Omega$$

Now, $V_C = I_r X_C$

$$150 = 0.5 X_C$$

$$\therefore \quad X_C = 300 \ \Omega$$

Now, at resonance,

$$X_L = X_C$$

$$\therefore \quad 2\pi \times 400 \times L = 300$$

$$\therefore \quad L = 119.37 \text{ mH}$$

Example 2.65 A series circuit consists of a 0.1 μF capacitor, an inductive coil having resistance of 22 Ω, inductance 0.1 H, and a non-inductive resistance of 68 Ω. Find the resonant frequency of the circuit. If the circuit is connected to a supply of 20 V ac at the resonant frequency, calculate: (a) the current in the circuit, (b) the voltage drop across each component, (c) the power consumed by the circuit, and (d) Q-factor of the circuit.

Solution

The conditions of the example are shown in Fig. 2.118.

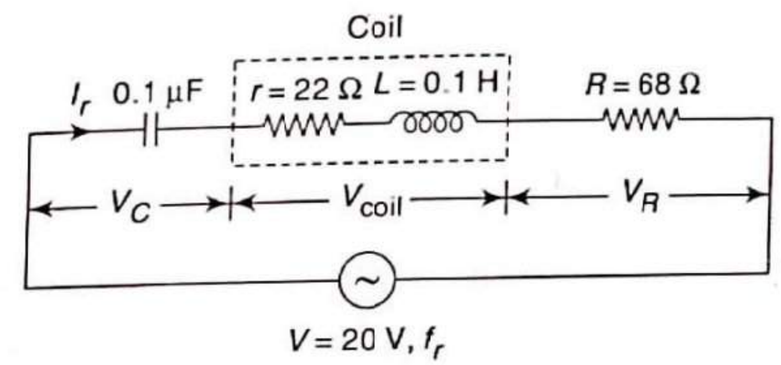

Fig. 2.118

As supply frequency is resonant frequency, the circuit is under resonance condition. So, current flowing through the circuit,

$$I_r = \frac{V}{R+r} = \frac{20}{68+22} = 0.222 \text{ A}$$

Resonant frequency,

$$\omega_r = \frac{1}{\sqrt{LC}} = \frac{1}{\sqrt{0.1 \times 0.1 \times 10^{-6}}} = 10000 \text{ rad/sec}$$

As $\omega_r = 2\pi f_r$,

$$f_r = \frac{\omega_r}{2\pi} = \frac{10000}{2\pi} = 1591.5 \text{ Hz}$$

Now, capacitive reactance,

$$X_C = \frac{1}{\omega_r C} = \frac{1}{10000 \times 0.1 \times 10^{-6}} = 1000 \ \Omega$$

Voltage across the capacitor,

$$V_C = I_r X_C = 0.222 \times 1000 = 222 \text{ V}$$

Voltage across the non-inductive resistance,

$$V_R = I_r R = 0.222 \times 68 = 15.096 \text{ V}$$

Voltage across the inductive coil:

Inductive reactance,

$$X_L = \omega_r L = 10000 \times 0.1 = 1000 \ \Omega$$

$$Z_{coil} = \sqrt{r^2 + X_L^2} = \sqrt{(22)^2 + (1000)^2} = 1000.24\ \Omega$$

$$\therefore \quad V_{coil} = I_r Z_{coil} = 0.222 \times 1000.24 = 222.05\ \text{V}$$

Power consumed by the circuit at resonance,

$$P = I_r^2 \times R_{eq} = (0.222)^2 \times [R + r] = (0.222)^2 \times (68 + 22) = 4.436\ \text{W}$$

Q-Factor of the circuit,

$$\frac{V_C}{V} = \frac{222}{20} = 11.1$$

EXERCISES 2.2

1. A voltage $v = 100 \sin 314t$ is applied to a series circuit consisting of 10 Ω resistance, 0.0318 H inductance and a capacitance of 63.6 μF. Find the expression for $i(t)$. Calculate phase angle between voltage and current, power factor, and active power consumed.
[*Ans.* 2.43 sin (314t + 76°); 76°; 0.24 lead; 29.1 W]
2. A coil of resistance 10 Ω and inductance 0.1 H is connected in series with a capacitor of 150 μF across a 200 V, 50 Hz supply. Calculate (i) inductive reactance, (ii) impedance, (iii) current, (iv) pf, and (v) voltages across coil and capacitor. [*Ans.* (i) 31.42 Ω, (ii) 14.28 Ω, (iii) 14 A, (iv) 0.7 lag, (v) 461.58 V, 297.08 V]
3. A voltage $v = 200 \sin(100\pi t)$ is applied to a coil having $R = 200\ \Omega$, and $L = 638$ mH. Determine the expression for current and power taken by the coil. [*Ans.* $i = 0.707 \sin (100\ \pi t - 45.050$ W]
4. A resistance is connected in series with a coil across 230 V, 50 Hz supply. The current is 1.8 A and the voltages across the resistance and coil are 80 V and 170 V, respectively. Calculate the resistance and inductance of the coil, and the phase difference between the current and the supply voltage. Draw the phasor diagram. [*Ans.* $r = 61.13\ \Omega$, $L = 0.229$ H, $\phi = 34.29$]
5. Draw a phasor diagram for the circuit shown in Fig. 2.119. Find the values of (i) current I, (ii) V_1 and V_2, and (iii) pf.
[*Ans.* (i) 11.68 A, (ii) 217.48 V, 443.14 V, (iii) 0.876 lead]

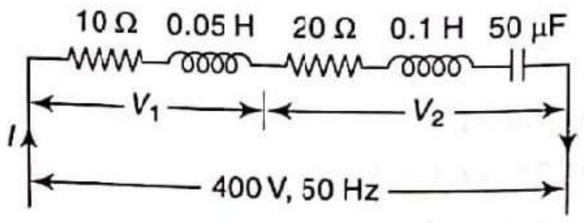

Fig. 2.119

6. A circuit composed of a resistance of 8 Ω and a series capacitive reactance of 6 Ω. A voltage $v = 141 \sin 314t$ is applied to the circuit. Find the complex impedance and draw the impedance triangle. Write the expression for the instantaneous value of the current. Calculate the power delivered to the circuit. Find the equation for the voltage appearing across the capacitor. Also find the value of capacitance in farad.
[*Ans.* (8 – j6) Ω, (10∠–36.87°) Ω; 14.1 sin (314t + 36.87°); 795.2 W; v_C = 84.6 sin (314 – 53.13°); 530.52 × 10^{-6}F]
7. In a series circuit containing pure resistance and a pure inductance, the current and voltage are expressed as $i(t) = 5\sin (314t + 2\pi/3)$ and $v(t) = 15\sin (314t + 5\pi/6)$. Determine impedance of the circuit, resistance of the circuit, inductance of the circuit, power, and pf.
[*Ans.* 3 Ω; 2.6 Ω; 4.78 mH; 32.58 W; 0.866 lag]
8. In the circuit of Fig. 2.120, calculate the voltage across the capacitor. Given that the applied voltage is 5 V, drops across the resistance and the inductance are 3 V and 1 V, respectively. Draw the phasor diagram.
[*Ans.* 5 V]

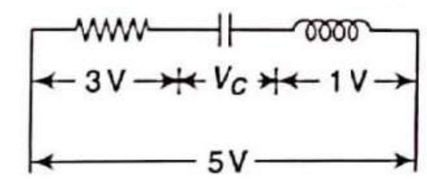

Fig. 2.120

9. When a voltage of 100 V is applied to a coil A, the current taken is 8 A and the power is 120 W. When applied to another coil B, the current is 10 A and the power is 500 W. What current and power will be taken when 100 V is applied to the two coils connected in series? [*Ans.* 4.52 A; 140.46 W]
10. A 400 V, 50 Hz supply is connected to a coil in series with a resistor of 100 Ω. The voltage across resistance and coil are 180 V and 320 V respectively. Find the power consumed by the coil. Sketch phasor diagram.
[*Ans.* 126 W]
11. Current of 7.5 A flows through a non-inductive resistance in series with a choke coil when connected to supply of 230 V, 50 Hz. If the voltage across the resistance is 110 V and across the coil 180 V. Calculate (i) resistance, reactance and impedance of the choke coil; (ii) total resistance and impedance of the circuit; (iii) power absorbed by the coil; (iv) total power drawn by the circuit; and (v) power factor of the whole circuit.
[*Ans.* 5.1 Ω, 23.45 Ω; 24 Ω, 19.77 Ω; 30.67 Ω, 286.9 W; 1112 W; 0.645 lagging]
12. For the circuit shown in Fig. 2.121, find current, V_1 and V_2, and power factor. Draw phasor diagram.

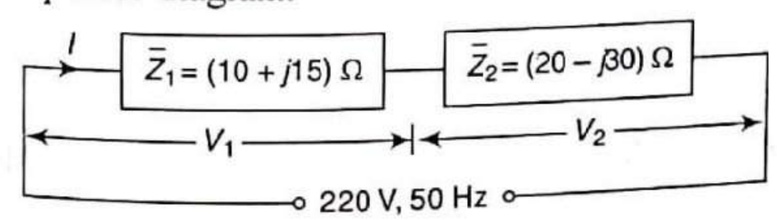

Fig. 2.121

[*Ans.* 6.56∠26.565°) A; (118.28∠82.875°) V; (236.55∠–29.745) A; 0.8944 leading]
13. A series R-L-C circuit is connected to 200 V ac supply. The current drawn by the circuit at resonance is 20 A. The voltage drop across the capacitor is

5000 V at series resonance. Calculate resistance and inductance if capacitance is 4 μF. Also calculate the resonance frequency.

[*Ans.* 10 Ω; 0.25 H; 159.15 Hz]

14. A coil is connected in series with a 20 μF capacitor with a constant supply voltage of 200 V; it is found that the circuit takes its maximum current of 50 A when the supply frequency is 100 Hz. Calculate resistance and inductance of the coil and voltage across the capacitor. What is the Q-factor of the circuit? [*Ans.* 4 Ω; 0.127 H; 3979 V; 19.9]
15. A series circuit consisting of a 12 Ω resistance, 0.3 H inductance, and a variable capacitor is connected across 100 V, 50 Hz ac supply. The capacitance value is adjusted to obtain maximum current. Find this capacitance value and the power drawn by the circuit under this condition. [*Ans.* $C = 33.77$ μF, $P = 833.33$ W]
16. A pure resistance R, a choke coil, and a pure capacitor of 15.91 μF are connected in series in carrying a current of 0.25 A. The voltage across the choke coil is 40 V. The voltage across the capacitor is 50 V, and the voltage across the resistance is 20 V. The voltage across the combination of R and choke coil is 45 V. Calculate (a) supply voltage, (b) frequency, and (c) power loss in choke coil.

[*Ans.* $V = 22.92$ V, $f = 50$ Hz, $P = 0.156$ W]

2.3 AC Parallel Circuits

An ac circuit that has number of branches connected in parallel such that the voltage across them is same, is called an **ac parallel circuit**. The current in any one branch depends upon the impedance of that branch. The total line current supplied to the circuit is the phasor sum of branch currents. Parallel circuits are used more often in practice as all lighting and power circuits are constant voltage circuits and the loads/equipments are connected in parallel.

While analysing an ac parallel circuit, two important points must be kept in mind. First, a parallel circuit, in fact, consists of two or more series circuits connected in parallel. Therefore, each branch of the circuit can be analysed separately as a series circuit and then the effect of the separate branches can be combined. Secondly, alternating voltages and currents are phasor quantities. This implies that both magnitudes and phase angles must be taken account while carrying out circuit calculations. There are three methods of solving ac parallel circuits, namely;

1. By phasor diagram
2. By phasor algebra
3. Admittance method

The use of a particular method will depend upon the conditions of the problem. However, in general, that method should be used which yields quick results.

2.3.1 Phasor diagram

In this method, we find the magnitude and phase angle of each branch current. We then draw the phasor diagram taking voltage as reference phasor. The circuit or line current is the phasor sum of the branch currents and can be determined by parallelogram law. Consider a parallel circuit as shown in Fig. 2.122(a), consisting of two branches and connected to an alternating voltage of V volts.

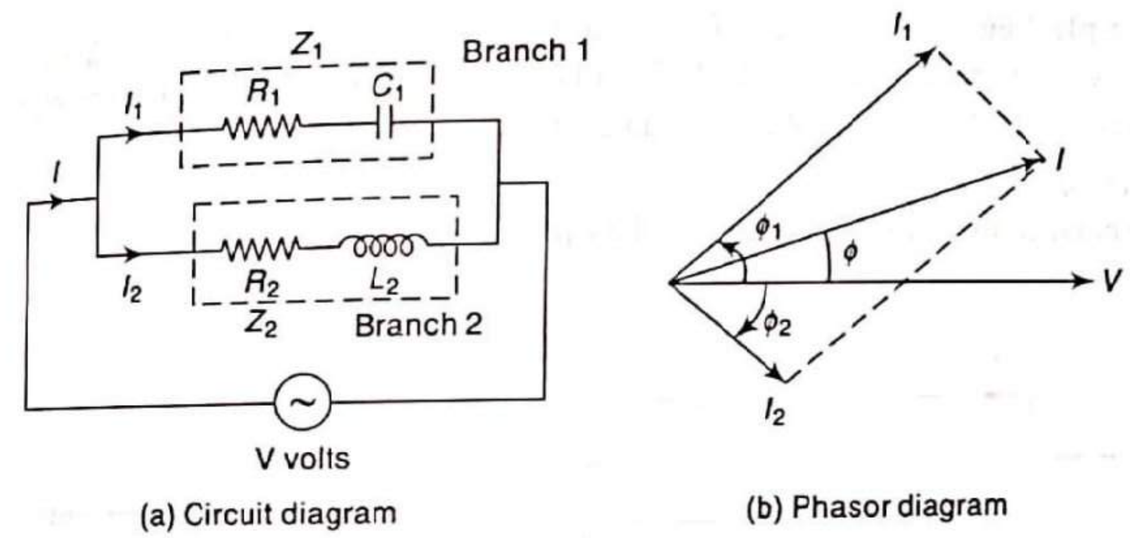

(a) Circuit diagram (b) Phasor diagram

Fig. 2.122 Analysis of parallel circuit by phasor diagram

Branch 1 $Z_1 = \sqrt{R_1^2 + X_{C1}^2}$; $I_1 = \dfrac{V}{Z_1}$; $\phi_1 = \tan^{-1}\dfrac{X_{C1}}{R_1}$

The current I_1 in branch 1 leads the applied voltage V by ϕ_1°.

Branch 2 $Z_2 = \sqrt{R_2^2 + X_{L2}^2}$; $I_2 = \dfrac{V}{Z_2}$; $\phi_2 = \tan^{-1}\dfrac{X_{L2}}{R_2}$

The current I_2 in branch 2 lags behind the applied voltage V by ϕ_2°.

The phasor diagram is shown in Fig. 2.122(b). The line current I is the phasor sum of I_1 and I_2.

The phasor diagram method is suitable only when the parallel circuit is simple and contains two branches. However, if the parallel circuit is complex having more than two branches, this method becomes very inconvenient. In such cases, use of phasor algebra is recommended to solve parallel-circuit problems.

2.3.2 Phasor Algebra

In this method, voltages, currents and impedances are expressed in the complex form, i.e., either in the rectangular or polar form. Since complex form includes both magnitude and phase angle, the solution of parallel circuit problems can be obtained mathematically by using the rules of phasor algebra. This eliminates the need of phasor diagram. Referring back to the parallel circuit shown in Fig. 2.122(a), we have

$$\bar{V} = (V - j\,0) = (V \angle 0)$$
$$\bar{Z}_1 = (R_1 - j X_{C1}) = (Z_1 \angle -\phi_1)$$

$$\bar{Z}_2 = (R_2 + jX_{L2}) = (Z_2 \angle \phi_2)$$

Branch current, $\bar{I}_1 = \dfrac{\bar{V}}{\bar{Z}_1}$

Branch current, $\bar{I}_2 = \dfrac{\bar{V}}{\bar{Z}_2}$

Total circuit current, $\bar{I} = \bar{I}_1 + \bar{I}_2$

Example 2.66 A resistance of 20 Ω and a pure coil of inductance 31.8 mH are connected in parallel across 230 V, 50 Hz supply. Find (i) the line current, (ii) power factor, and (iii) power consumed by the circuit.

Solution

The conditions in the example are shown in Fig. 2.123(a).

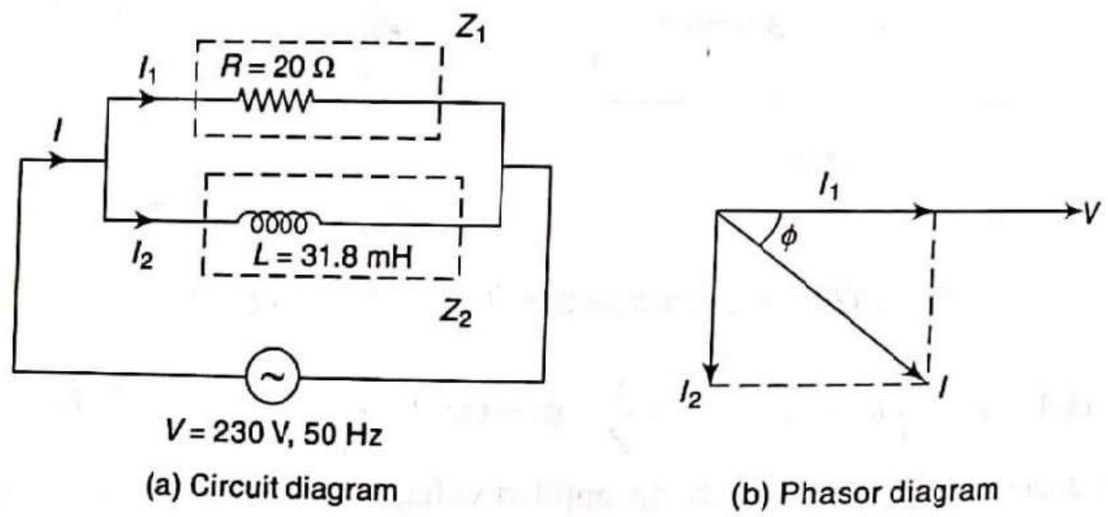

(a) Circuit diagram (b) Phasor diagram

Fig. 2.123

Given: $V = 230$ V

$f = 50$ Hz

$L = 31.8 \times 10^{-3}$ H $\Rightarrow$ $X_L = 2\pi fL = 2\pi \times 50 \times 31.8 \times 10^{-3} = 10\ \Omega$

Branch current, $I_1 = \dfrac{V}{R} = \dfrac{230}{20} = 11.5$ A

The current I_1 is in phase with the applied voltage.

Branch current, $I_2 = \dfrac{V}{X_L} = \dfrac{230}{10} = 23$ A

The current I_2 lags behind the applied voltage by 90°.

So, line current, $I = \sqrt{I_1^2 + I_2^2}$

$= \sqrt{(11.5)^2 + (23)^2}$

$= 25.71$ A

From phasor diagram,

$$\text{pf} = \cos\phi = \frac{I_1}{I} = \frac{11.5}{25.71} = 0.447 \text{ lag}$$

Power consumed, $P = VI\cos\phi$

$= 230 \times 25.71 \times 0.447$

$= 2643$ W

Alternative method:

Taking V as reference phasor,

$\bar{V} = (230 \angle 0)$ V

$\bar{Z}_1 = (20 + j0)\ \Omega = (20 \angle 0)\ \Omega$

$\bar{Z}_2 = (0 + j10)\ \Omega = (10 \angle 90)\ \Omega$

By Ohm's law, $\bar{I}_1 = \dfrac{\bar{V}}{\bar{Z}_1} = \dfrac{(230 \angle 0)}{(20 \angle 0)} = (11.5 \angle 0)$ A

$\bar{I}_2 = \dfrac{\bar{V}}{\bar{Z}_2} = \dfrac{(230 \angle 0)}{(10 \angle 90)} = (23 \angle -90)$ A

Total current, $\bar{I} = \bar{I}_1 + \bar{I}_2$

$= (11.5 \angle 0) + (23 \angle -90)$

$= (11.5 + j0) + (0 - j23)$

$= (11.5 - j23)$ A

$= (25.71 \angle -63.43)$ A

So, pf $= \cos\phi$

$= \cos 63.43$

$= 0.447$ lagging

Power, $P = VI\cos\phi$

$= 230 \times 25.71 \times 0.447$

$= 2643$ W

Example 2.67 For a circuit shown in Fig. 2.124, determine:

(i) Total impedance of the circuit and total current

(ii) Branch current I_1 and I_2

(iii) Power factor of each branch and total power factor

(iv) Power consumed by each branch

Solution

Assuming the different impedances, we get Fig. 2.125.

Taking applied voltage as reference phasor,

$\bar{V} = (230 \angle 0)$

$L = 10 \times 10^{-3}$ H; $X_L = 2\pi fL = 2\pi \times 50 \times 10 \times 10^{-3} = 3.14\ \Omega$

$C = 50 \times 10^{-6}$ F; $X_C = \dfrac{1}{2\pi fC} = \dfrac{1}{2\pi \times 50 \times 500 \times 10^{-6}} = 6.37\ \Omega$

$\bar{Z}_1 = (10 + j3.14)\ \Omega = (10.48 \angle 17.43)\ \Omega$

$\bar{Z}_2 = (10 - j6.37)\ \Omega = (11.86 \angle -32.5)\ \Omega$

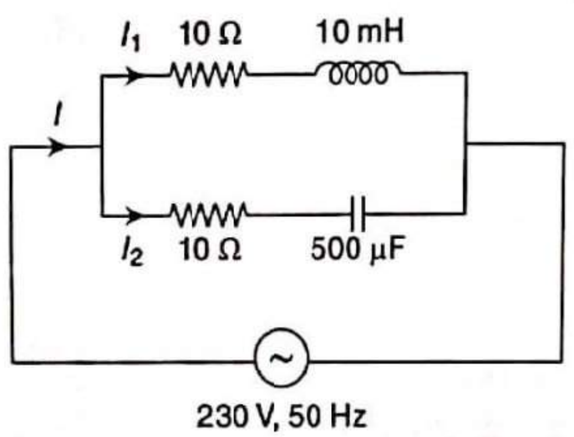

Fig. 2.124

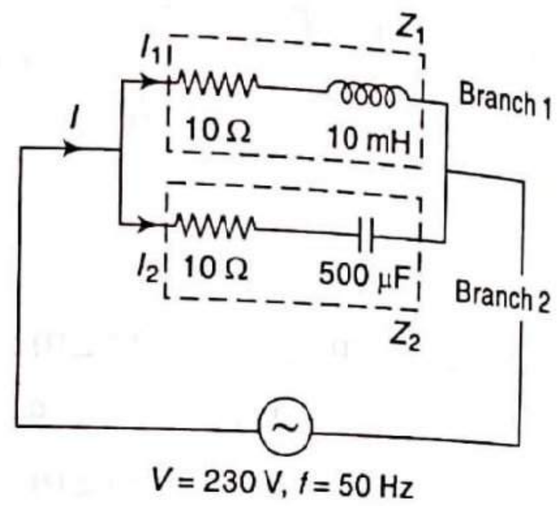

Fig. 2.125

(i) Total impedance of the circuit,

$$\bar{Z} = \frac{\bar{Z}_1\bar{Z}_2}{\bar{Z}_1+\bar{Z}_2}$$

$$= \frac{(10.48\angle 17.43)\,(11.86\angle -32.5)}{(10+j3.14)+(10-j6.37)}$$

$$= \frac{(124.29\angle -15.07)}{(20-j3.23)}$$

$$= \frac{(124.29\angle -15.07)}{(20.26\angle -9.17)}$$

$$= (6.13\angle -5.9)\ \Omega$$

Total current, $I = \dfrac{\bar{V}}{\bar{Z}} = \dfrac{(230\angle 0)}{(6.13\angle -5.9)} = (37.52\ \angle 5.9)$ A

(ii) Branch current, $\bar{I}_1 = \dfrac{\bar{V}}{\bar{Z}_1} = \dfrac{(230\angle 0)}{(10.48\angle 17.43)} = (21.95\ \angle -17.43)$ A

$$\bar{I}_2 = \frac{\bar{V}}{\bar{Z}_2} = \frac{(230\angle 0)}{(11.86\angle -32.5)} = (19.39\ \angle 32.5)\text{ A}$$

(iii) Power factor of branch 1,

$$(\text{pf})_1 = \cos\phi_1$$

where ϕ_1 is the phase angle of branch 1. From polar form of impedance Z_1, $\phi_1 = 17.43$. Branch 1 is inductive.

So, $(\text{pf})_1 = \cos 17.43$
$= 0.954$ lagging

Power factor of branch 2,

$$(\text{pf})_2 = \cos\phi_2$$

where ϕ_2 is the phase angle of branch 2. From polar form of impedance Z_2, $\phi_2 = -32.5$. Branch 2 is capacitive.

So, $(\text{pf})_2 = \cos(-32.5)$
$= 0.843$ leading

Total power factor.

$$\text{pf} = \cos\phi$$

where ϕ is the phase angle total circuit. From polar form of impedance Z, $\phi = -5.9$. As phase angle is negative total circuit is capacitive.

So, $\text{pf} = \cos(-5.9)$
$= 0.995$ leading

(iv) Power consumed by branch 1,

$$P_1 = I_1^2 R = (21.95)^2 \times 10 = 4.818\text{ kW}$$

Power consumed by branch 2,

$$P_2 = I_2^2 R = (19.39)^2 \times 10 = 3.76\text{ kW}$$

Example 2.68 In the circuit shown in Fig. 2.126, a voltage $v = 100\sin 3t$ is applied. Determine (i) branch current I_1 and I_2 with their phase angles and (ii) total current supplied by the source and its phase angle.

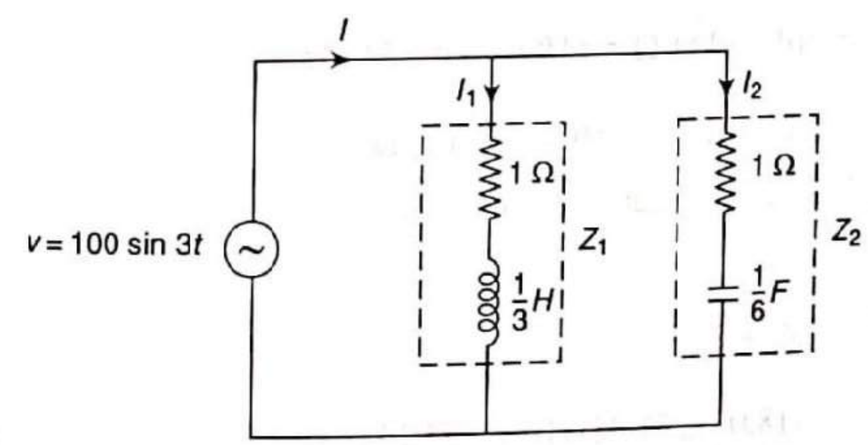

Fig. 2.126

Solution

We have $v = 100\sin 3t$. Converting the standard sinusoidal form into polar form,

$$\bar{V} = (70.71\ \angle 0)\text{ V}$$

From equation of applied voltage, $\omega = 3$ rad/sec

$$L = \frac{1}{3}\text{ H};\ X_L = \omega L = 3\times\frac{1}{3} = 1\ \Omega$$

$$C = \frac{1}{6}\text{ F};\ X_C = \frac{1}{\omega C} = \frac{1}{3\times\frac{1}{6}} = 2\ \Omega$$

$$\bar{Z}_1 = (1+j1)\ \Omega = (1.414\ \angle 45)\ \Omega$$

$$\bar{Z}_2 = (1-j2)\ \Omega = (2.236\ \angle -63.43)\ \Omega$$

(i) Branch current, $\bar{I}_1 = \dfrac{\bar{V}}{\bar{Z}_1} = \dfrac{(70.71\angle 0)}{(1.414\angle 45)} = (50\angle -45)$ A

Branch current, $\bar{I}_2 = \dfrac{\bar{V}}{\bar{Z}_2} = \dfrac{(70.71\angle 0)}{(2.236\angle -63.43)} = (31.62\angle 63.43)$ A

(ii) Total current supplied by the source,

$$\begin{aligned}\bar{I} &= \bar{I}_1 + \bar{I}_2\\ &= (50\angle -45) + (31.62\angle 63.43)\\ &= (35.36 - j35.36) + (14.14 + j28.28)\\ &= (49.5 - j7.08)\text{ A}\\ &= (50\angle -8.14)\text{ A}\end{aligned}$$

Example 2.69 Two impedances, $\bar{Z}_1 = (10 + j15)\ \Omega$ and $\bar{Z}_2 = (6 - j8)\ \Omega$ are connected in parallel. The total current supplied is 15 A. What is the power taken by each branch?

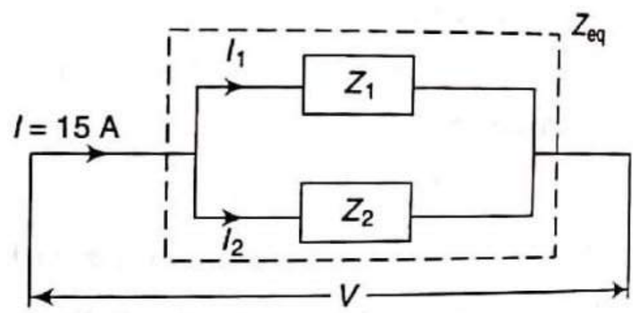

Fig. 2.127

Solution

The conditions in the example are shown in Fig. 2.127.

$$\bar{Z}_1 = (10 + j15)\ \Omega = (18.03\angle 56.31)\ \Omega$$

$$\bar{Z}_2 = (6 - j8)\ \Omega = (10\angle -53.13)\ \Omega$$

Total or equivalent impedance of the circuit,

$$\bar{Z}_{eq} = \frac{\bar{Z}_1\bar{Z}_2}{\bar{Z}_1 + \bar{Z}_2}$$

$$= \frac{(18.03\angle 56.31)(10\angle -53.13)}{(10 + j15) + (6 - j8)}$$

$$= \frac{(180.3\angle 3.18)}{(16 + j7)}$$

$$= \frac{(180.3\angle 3.18)}{(17.46\angle 23.63)}$$

$$= (10.33\angle -20.45)\ \Omega$$

By Ohm's law,

Voltage across the circuit, $V = IZ_{eq}$

$= 15 \times 10.33$

$= 154.95$ V

Branch current, $I_1 = \dfrac{V}{Z_1} = \dfrac{154.95}{18.03} = 8.59$ A

Branch current, $I_2 = \dfrac{V}{Z_2} = \dfrac{154.95}{10} = 15.495$ A

Hence,

Power taken by the first branch, $P_1 = I_1^2 R_1 = (8.59)^2 \times 10 = 737.88$ W

Power taken by the second branch, $P_2 = I_2^2 R_2 = (15.495)^2 \times 6 = 1440.57$ W

Example 2.70 Two circuits A and B are connected in parallel across a 200 V, 50 Hz mains. Circuit A consists of a resistance of 10 Ω and an inductance of 0.12 H connected in series. Circuit B consists of a resistance of 20 Ω in series with a capacitor of 40 μF. Calculate (i) current in each branch and (ii) power factor. Draw phasor diagram.

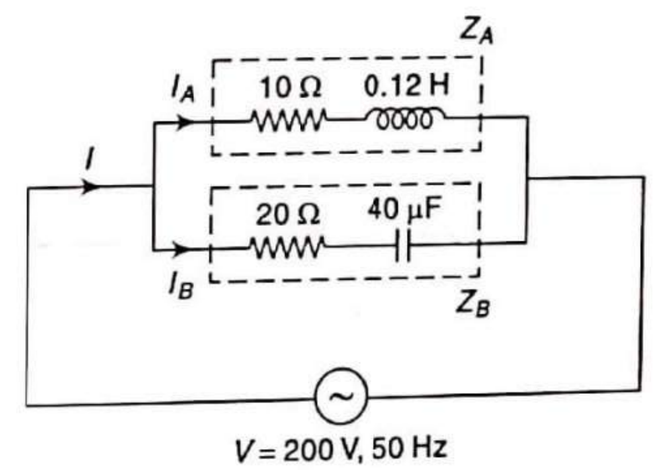

Fig. 2.128

Solution

The conditions in the example are shown in Fig. 2.128. Assuming the various impedances, currents and voltage, we have,

$$L = 0.12\text{ H};\ X_L = 2\pi fL = 2\pi \times 50 \times 0.12 = 37.7\ \Omega$$

$$C = 40 \times 10^{-6}\text{ F};\ X_C = \frac{1}{2\pi FC} = \frac{1}{2\pi \times 50 \times 40 \times 10^{-6}} = 79.58\ \Omega$$

$$\bar{Z}_A = (10 + j37.7)\ \Omega = (39\angle 75.14)\ \Omega$$

$$\bar{Z}_B = (20 - j79.58)\ \Omega = (82.05\angle -75.89)\ \Omega$$

Total or equivalent impedance of the circuit,

$$Z_{eq} = \frac{\bar{Z}_A\bar{Z}_B}{\bar{Z}_A + \bar{Z}_B} = \frac{(39\angle 75.14)(82.05\angle -75.89)}{(10 + j37.7)(20 - j79.58)}$$

$$= \frac{(3200\angle -0.75)}{(30 - j41.88)} = \frac{(3200\angle -0.75)}{(51.52\angle -54.38)}$$

$$= (62.11\angle 53.63)\ \Omega$$

Taking applied voltage as reference, we have

$\bar{V} = (200\angle 0)$ V

(i) Branch current, $\bar{I}_A = \dfrac{\bar{V}}{\bar{Z}_A} = \dfrac{(200\angle 0)}{(39\angle 75.14)} = (5.13\angle -75.14)$ A

Branch current, $\bar{I}_B = \dfrac{\bar{V}}{\bar{Z}_B} = \dfrac{(200\angle 0)}{(82.05\angle -75.89)} = (2.44\angle 75.89)$ A

(ii) pf = cos 53.63
= 0.59 lagging

Phasor diagram (Fig. 2.129):

Taking applied voltage as reference phasor.

From circuit diagram, $\bar{I} = \bar{I}_A + \bar{I}_B$

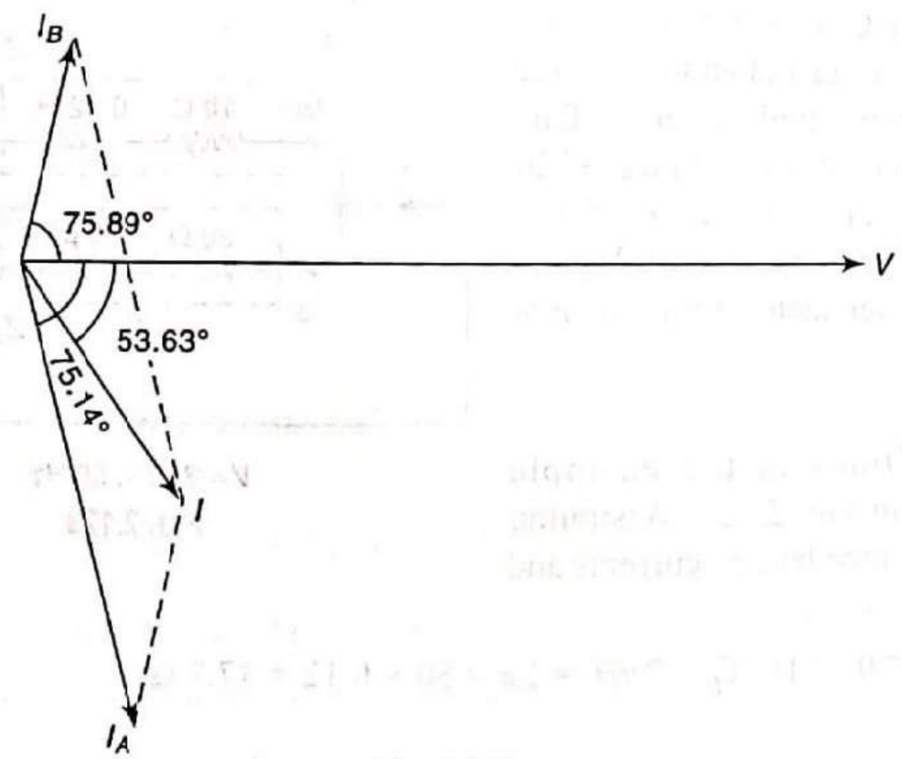

Fig. 2.129

Example 2.71 Two impedances (20 ∠−45) Ω and (30 ∠30) Ω are connected in series across a certain ac supply and the resulting current is drawn to be 10 A. If the supply voltage remains unchanged, calculate the supply current, when the two impedances are connected in parallel.

Solution

Let $\bar{Z}_1 = (20\angle -45)\ \Omega = (14.14 - j14.14)\ \Omega$

$\bar{Z}_2 = (30\angle 30)\ \Omega = (26 + j15)\ \Omega$

When impedances are in series, current is 10 A (Fig. 2.130):

Total impedances,

$$\bar{Z}_{eq} = \bar{Z}_1 + \bar{Z}_2$$
$$= (14.14 - j14.14) + (26 + j15)$$
$$= (40.14 + j0.86)\ \Omega$$
$$= (40.15\angle 1.23)\ \Omega$$

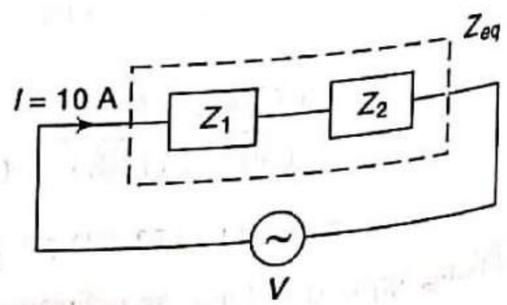

Fig. 2.130

Now, taking 'I' as reference, $\bar{I} = (10\angle 0)$

∴ Supplied voltage $= \bar{I}\bar{Z}_{eq}$
$= (10\angle 0)(40.15\angle 1.23)$
$= (401.5\angle 1.23)$ V

When impedances are in parallel across the same supply (Fig. 2.131):

Total impedances,

$$\bar{Z}_{eq} = \frac{\bar{Z}_1\bar{Z}_2}{\bar{Z}_1 + \bar{Z}_2}$$
$$= \frac{(20\angle -45)(30\angle 30)}{(14.14 - j14.14) + (26 + j15)}$$
$$= \frac{(600\angle -15)}{(40.14 + j0.86)}$$
$$= \frac{(600\angle -15)}{(40.15\angle 1.23)}$$
$$= (14.94\angle -16.23)\ \Omega$$

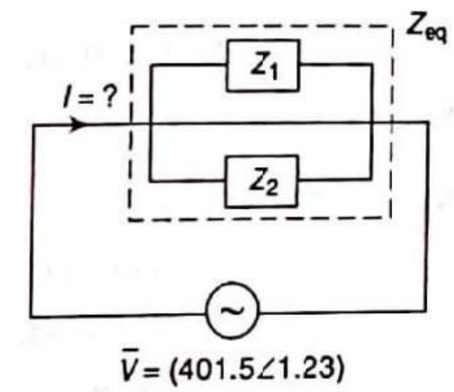

Fig. 2.131

Hence, Supply current, $I = \dfrac{\bar{V}}{\bar{Z}_{eq}}$

$$= \frac{(401.5\angle 1.23)}{(14.94\angle -16.23)}$$
$$= (26.87\angle 17.46)\ \text{A}$$

Example 2.72 Find I_1 and I_2 in the circuit shown in Fig. 2.132.

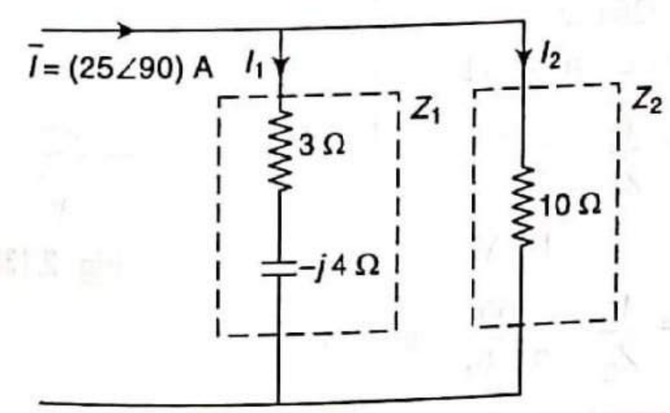

Fig. 2.132

Solution

$\bar{I} = (25\angle 90)$ A

$\bar{Z}_1 = (3 - j4)\ \Omega = (5\angle -53.13)\ \Omega$

$\bar{Z}_2 = (10 + j0)\ \Omega = (10\angle 0)\ \Omega$

By current division rule,

$$\bar{I}_1 = \frac{\bar{I} \times \bar{Z}_2}{\bar{Z}_1 + \bar{Z}_2}$$

$$= \frac{(25\angle 90)(10\angle 0)}{(3-j4)+(10+j0)} = \frac{(250\angle 90)}{(13-j4)} = \frac{(250\angle 90)}{(13.6\angle -17.1)}$$

$$= (18.38\ \angle 107.1)\ \text{A}$$

Now, $\bar{I} = \bar{I}_1 + \bar{I}_2$

So, $\bar{I}_2 = \bar{I} - \bar{I}_1$

$$= (25\ \angle 90) - (18.38\ \angle 107.1)$$
$$= (0 + j25) - (-5.4 + j17.57)$$
$$= (5.4 + j7.43)$$
$$= (9.19\ \angle 53.99)\ \text{A}$$

Example 2.73 A voltage of (200 ∠53.13) V is applied across two impedances in parallel. The values of the impedances are (12 + j16) Ω and (10 − j20) Ω. Determine kVA, kVAR, and kW in each branch and power factor of the whole circuit.

Solution

The conditions in the example are shown in Fig. 2.133.

Given:

$$\bar{V} = (200\ \angle 53.13)\ \text{V}$$

Let $\bar{Z}_1 = (12 + j16)\ \Omega$
$= (20\ \angle 53.13)\ \Omega$

$\bar{Z}_2 = (10 - j20)\ \Omega$
$= (22.36\ \angle -63.43)\ \Omega$

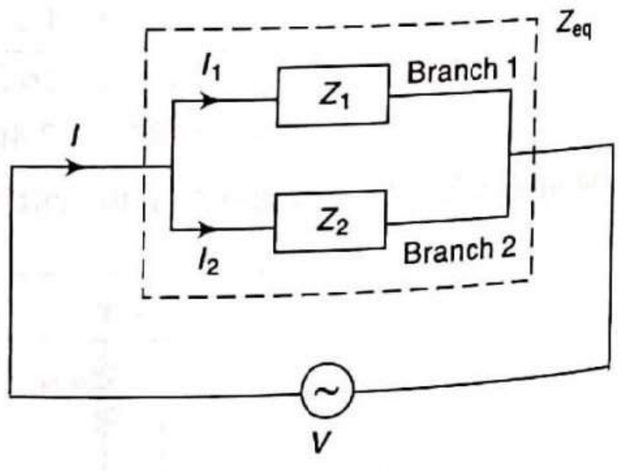

Fig. 2.133

Branch current, $I_1 = \dfrac{V}{Z_1} = \dfrac{200}{20}$

$= 10$ A

Branch current, $I_2 = \dfrac{V}{Z_2} = \dfrac{200}{22.36} = 8.94$ A

For branch 1 (i.e., impedance Z_1):

$$\text{kW} = \frac{VI_1 \cos\phi}{1000} = \frac{200 \times 10 \times \cos 53.13°}{1000} = 1.2$$

$$\text{kVAR} = \frac{VI_1 \sin\phi}{1000} = \frac{200 \times 10 \times \sin 53.13°}{1000} = 1.6$$

$$\text{kVA} = \frac{VI_1}{1000} = \frac{200 \times 10}{1000} = 2$$

For branch 2 (i.e., impedance Z_2):

$$\text{kW} = \frac{VI_2 \cos\phi}{1000} = \frac{200 \times 8.94 \times \cos(-63.43)}{1000} = 0.8$$

$$\text{kVAR} = \frac{VI_2 \sin\phi}{1000} = \frac{200 \times 8.94 \times \sin(-63.43)}{1000} = -1.6$$

$$\text{kVA} = \frac{VI_2}{1000} = \frac{200 \times 8.94}{1000} = 1.788$$

For power factor of the circuit, the phase angle (ϕ) of the circuit is required. The phase angle (ϕ) of the circuit can be calculated as:

Total impedance, $\bar{Z}_{eq} = \dfrac{\bar{Z}_1\ \bar{Z}_2}{\bar{Z}_1 + \bar{Z}_2}$

$$= \frac{(20\angle 53.13)(22.36\angle -63.43)}{(12 + j16) + (10 - j20)}$$

$$= \frac{(447.2\angle -10.3)}{(22 - j4)}$$

$$= \frac{(447.2\angle -10.3)}{(22.36\angle -10.3)}$$

$$= (20\ \angle 0)\ \Omega$$

Thus, from polar form of impedance,
phase angle, $\phi = 0$

So, pf = cos ϕ = cos 0 = 1 (unity)

Example 2.74 For a parallel circuit shown in Fig. 2.134, find the value of R_2 when the overall power factor is 0.92 lagging.

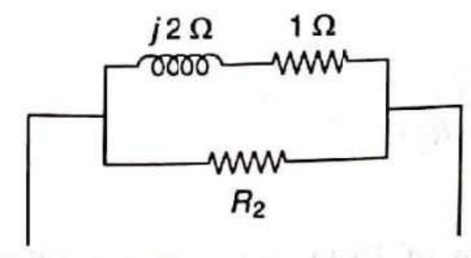

Fig. 2.134

Solution

Assuming the various impedances (Fig. 2.135), we get Fig. 2.135.

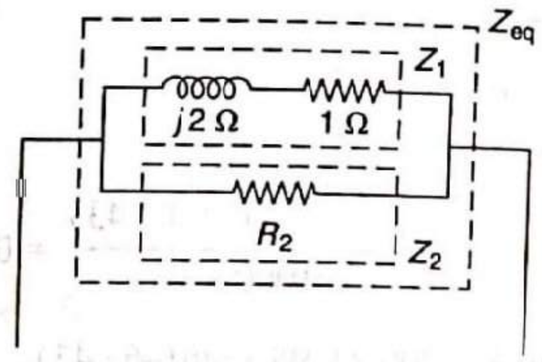

Fig. 2.135

Given: $\overline{Z}_1 = (1 + j2)\ \Omega = (2.24\ \angle 63.43)\ \Omega$

$\overline{Z}_2 = (R_2 + j0)\ \Omega = (R_2\ \angle 0)\ \Omega$

Total impedance, $\overline{Z}_{eq} = \dfrac{\overline{Z}_1\ \overline{Z}_2}{\overline{Z}_1 + \overline{Z}_2}$

$$= \frac{(2.24\ \angle 63.43)\ (R_2\ \angle 0)}{(1 + j2) + (R_2 + j0)}$$

$$= \frac{(2.24\,R_2\ \angle 63.43)}{[(1 + R_2\ ) + j2]}$$

$$= \frac{(2.24\,R_2\ \angle 63.43)}{\left[\sqrt{(1+R_2)^2 + (2)^2}\ \angle \tan^{-1}\dfrac{2}{(1+R_2)}\right]}$$

$$= \left(\underbrace{\frac{2.24\,R_2}{\sqrt{(1+R_2)^2 + (2)^2}}}_{\text{magnitude } (Z)}\ \underbrace{\angle 63.43 - \tan^{-1}\frac{2}{(1+R_2)}}_{\text{phase angle } (\phi)}\right)\Omega$$

But the power factor of overall circuit is given as 0.92 lagging, i.e.,

$\cos\phi = 0.92$

So, $\phi = 23.07°$

or $63.43 - \tan^{-1}\dfrac{2}{(1+R_2)} = 23.07$

or $R_2 = 1.353\ \Omega$

Example 2.75 A resistor of 30 Ω and capacitor of unknown value are connected in parallel across a 110 V, 50 Hz, 1 – ϕ supply. The combination draws a current of 5 A from the supply. Find the value of unknown capacitance of the capacitor. This combination is again connected across a 110 V supply of unknown frequency. It is observed that the total current drawn from the mains falls to 4 A. Determine the frequency of the supply. Draw the relevant diagrams.

Solution

The conditions in the example are shown in Fig. 2.136(a). The phasor diagram is shown in Fig. 2.136(b).

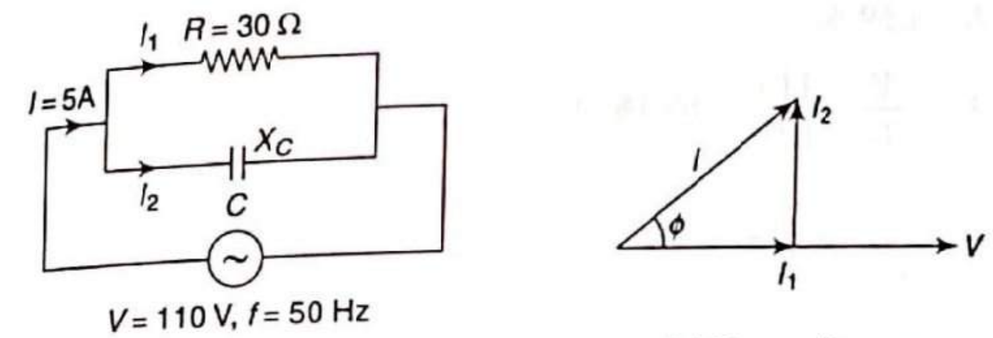

(a) Circuit diagram (b) Phasor diagram

Fig. 2.136

From circuit diagram, by Ohm's law

Branch current, $I_1 = \dfrac{V}{R} = \dfrac{110}{30} = 3.67$ A

From phasor diagram,

$$I = \sqrt{I_1^2 + I_2^2}$$

or $5 = \sqrt{(3.67)^2 + I_2^2}$

or $I_2 = 3.4$ A

Now, $V = I_2 X_C$

or $110 = 3.4 \times X_C$

or $X_C = 32.35\ \Omega$

Now, $\dfrac{1}{2\pi f C} = 32.35$

or $C = \dfrac{1}{2\pi \times 50 \times 32.35}$

or $C = 98.39 \times 10^{-6}$ F

$= 98.39\ \mu$F

Case (ii) Now the same circuit is connected across a 110 V supply of unknown frequency. The circuit current is 4 A (see Fig. 2.137). From case (i), we know the capacitance, i.e., $C = 98.39$ μF.

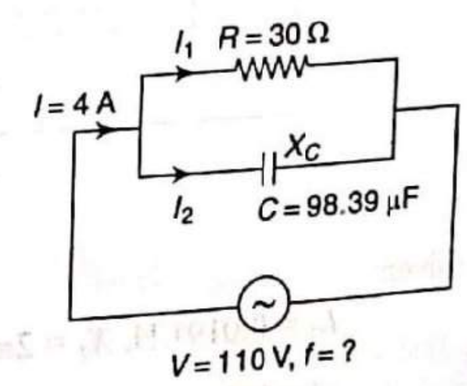

Fig. 2.137

From circuit diagram, by Ohm's law,

Branch current, $I_1 = \dfrac{V}{R} = \dfrac{110}{30} = 3.67$ A

As $\quad I = \sqrt{I_1^2 + I_2^2}$,

$$4 = \sqrt{(3.67)^2 + I_2^2}$$

So, $\quad I_2 = 1.59$ A

Hence, $X_C = \dfrac{V}{I_2} = \dfrac{110}{1.59} = 69.18\ \Omega$

So, $\quad \dfrac{1}{2\pi f C} = 69.18$

or $\quad f = \dfrac{1}{2\pi C \times 69.18} = \dfrac{1}{2\pi \times 98.39 \times 10^{-6} \times 69.18} = 23.38$ Hz

Example 2.76 Determine the equivalent impedance of the circuit shown in Fig. 2.138.

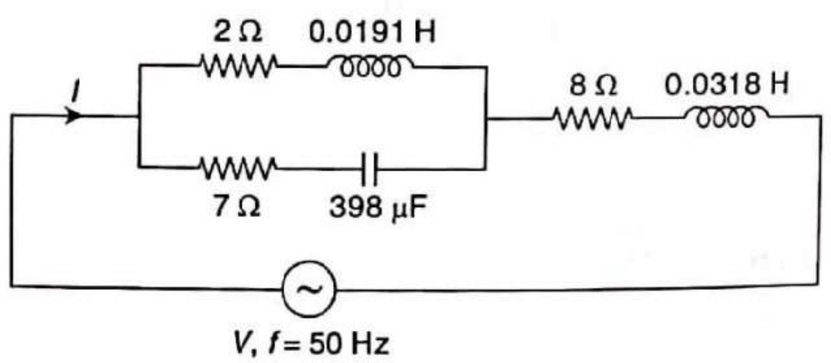

Fig. 2.138

Solution

By marking the various impedances in Fig. 2.138, we get Fig. 2.139.

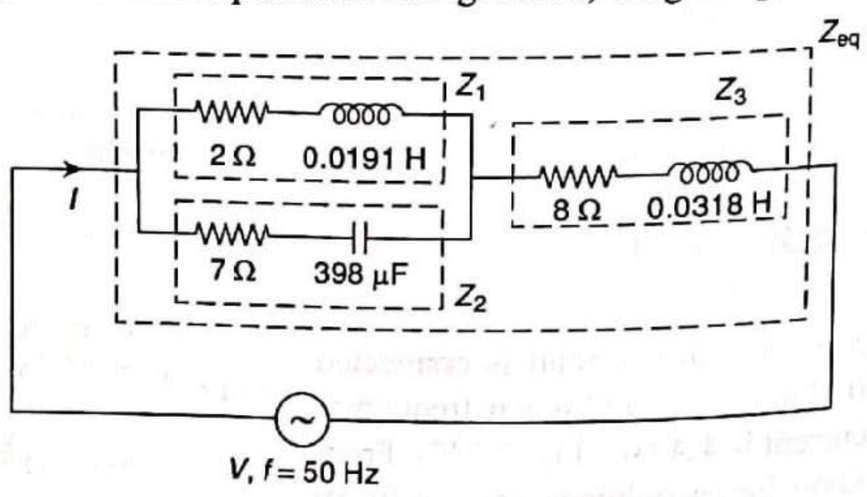

Fig. 2.139

Given:

$$L_1 = 0.0191 \text{ H}, X_L = 2\pi f L_1 = 2\pi \times 50 \times 0.0191 = 6\ \Omega$$

$$C = 398 \times 10^{-6} \text{ F}, X_C = \frac{1}{2\pi f C} = \frac{1}{2\pi \times 50 \times 398 \times 10^{-6}} = 8\ \Omega$$

$$L_3 = 0.0318 \text{ H}; X_L = 2\pi f L_3 = 2\pi \times 50 \times 0.0318 = 10\ \Omega$$

$$\bar{Z}_1 = (2 + j6)\ \Omega = (6.32\ \angle 71.57)\ \Omega$$

$$\bar{Z}_2 = (7 - j8)\ \Omega = (10.63\ \angle -48.81)\ \Omega$$

$$\bar{Z}_3 = (8 + j10)\ \Omega = (12.81\ \angle 51.34)\ \Omega$$

Equivalent impedance of the circuit,

$$\bar{Z}_{eq} = \frac{\bar{Z}_1 \bar{Z}_2}{\bar{Z}_1 + \bar{Z}_2} + \bar{Z}_3$$

$$= \frac{(6.32\ \angle 71.57)(10.63\ \angle -48.81)}{(2 + j6) + (7 - j8)} + (8 + j10)$$

$$= \frac{(67.18\ \angle 22.76)}{(9 - j2)} + (8 + j10)$$

$$= \frac{(67.18\ \angle 22.76)}{(9.22\ \angle -12.53)} + (8 + j10)$$

$$= (7.29\ \angle 35.29) + (8 + j10)$$
$$= (5.95 + j4.21) + (8 + j10)$$
$$= (13.95 + j14.21)\ \Omega$$
$$= (19.91\ \angle 45.53)\ \Omega$$

Example 2.77 The voltage of 150 V applied between terminals AB, produces a current of 32 A for the circuit shown in Fig. 2.140. Find the value of R and the power factor of the circuit.

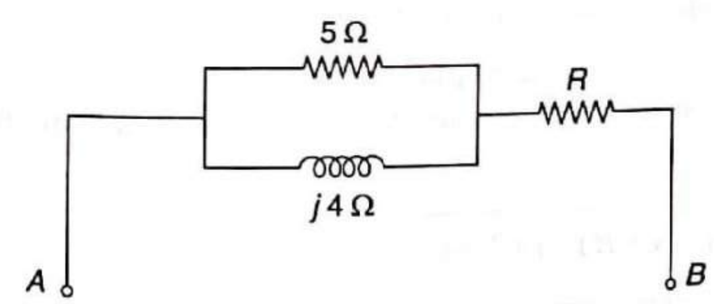

Fig. 2.140

Solution

When 150 V is applied between terminals AB, a current of 32 A flows in the circuit (see Fig. 2.141).

Given:

$$\bar{Z}_1 = (5 + j0)\ \Omega = (5\ \angle 0)\ \Omega$$

$$\bar{Z}_2 = (0 + j4)\ \Omega = (4\ \angle 90)\ \Omega$$

$$\bar{Z}_3 = (R + j0)\ \Omega = (R\ \angle 0)\ \Omega$$

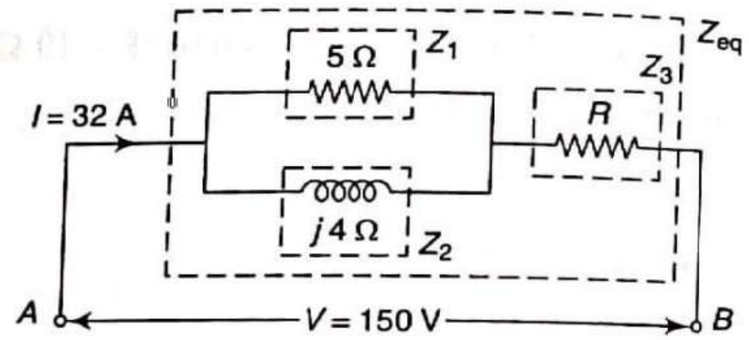

Fig. 2.141

Magnitude of the circuit impedance,

$$Z_{eq} = \frac{V}{I} = \frac{150}{32} = 4.69\ \Omega$$

Now, the circuit impedance can be expressed as

$$\bar{Z}_{eq} = \frac{\bar{Z}_1 \bar{Z}_2}{\bar{Z}_1 + \bar{Z}_2} + \bar{Z}_3$$

$$= \frac{(5\angle 0)(4\angle 90)}{(5+j0)+(0+j4)} + (R+j0)$$

$$= \frac{(20\angle 90)}{(5+j4)} + (R+j0)$$

$$= \frac{(20\angle 90)}{(6.4\angle 38.66)} + (R+j0)$$

$$= (3.13\angle 51.34) + (R+j0)$$

$$= (1.96 + j2.44) + (R+j0)$$

$$= [(1.96+R) + j2.44]\ \Omega$$

From rectangular form of circuit impedance, the magnitude of circuit impedance can be written as

$$Z_{eq} = \sqrt{(1.96+R)^2 + (2.44)^2}$$

So, $\quad 4.69 = \sqrt{(1.96+R)^2 + (2.44)^2} \qquad (\because Z_{eq} = 4.69\ \Omega)$

or $\quad R = 2.05\ \Omega$

Now, by substituting the value of R in the rectangular form of circuit impedance, we get

$$\bar{Z}_{eq} = [(1.96+R) + j2.44]\ \Omega$$

$$= [(1.96 + 2.05) + j2.44]\ \Omega$$

$$= (4.01 + j2.44)\ \Omega$$

$$= (4.69\angle 31.32)\ \Omega$$

From polar form of equivalent impedance,

phase angle, $\phi = 31.32$

(as ϕ is positive, circuit is inductive)

So, $\quad$ pf = cos 31.32

= 0.854 lagging

Example 2.78 In a series-parallel circuit, two parallel branches A and B are in series with C. The impedances are $\bar{Z}_A = (10 + j8)\ \Omega$, $\bar{Z}_B = (9 - j6)\ \Omega$, and $\bar{Z}_C = (3 + j2)\ \Omega$. If the voltage across Z_C is $(100\angle 0)$ V, determine the values of I_A and I_B.

Solution

Various voltages, impedances and current given in the example are marked in the circuit of Fig. 2.142.

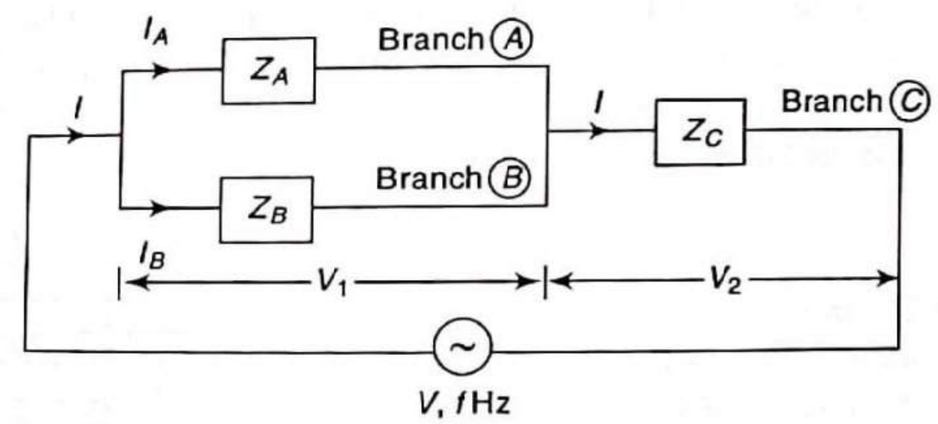

Fig. 2.142

Given:

$$\bar{Z}_A = (10 + j8)\ \Omega = (12.81\angle 38.66)\ \Omega$$

$$\bar{Z}_B = (9 - j6)\ \Omega = (10.82\angle -33.69)\ \Omega$$

$$\bar{Z}_C = (3 + j2)\ \Omega = (3.61\angle 33.69)\ \Omega$$

$$\bar{V}_2 = (100\angle 0)\ \text{V}$$

Circuit current, $\bar{I} = \dfrac{\bar{V}_2}{\bar{Z}_C} = \dfrac{(100\angle 0)}{(3.61\angle 33.69)} = (27.7\angle -33.69)$ A

By current division rule,

Branch current, $\bar{I}_A = \dfrac{\bar{I}\,\bar{Z}_B}{\bar{Z}_A + \bar{Z}_B}$

$$= \frac{(27.7\angle -33.69)(10.82\angle -33.69)}{(10+j8)+(9-j6)}$$

$$= \frac{(299.71\angle -67.38)}{(19+j2)}$$

$$= \frac{(299.71\angle -67.38)}{(19.1\angle 6)}$$

$$= (15.69\ \angle -73.38)\ \text{A}$$

Branch current, $\bar{I}_B = \bar{I} - \bar{I}_A$

$$= (27.7\ \angle -33.69) - (15.69\ \angle -73.38)$$
$$= (23.05 - j15.37) - (4.49 - j15.03)$$
$$= (18.56 - j0.34)\ \text{A}$$
$$= (18.56\ \angle -1.05)\ \text{A}$$

Example 2.79 Three impedances Z_1, Z_2 and Z_3 are connected in parallel. A sinusoidal voltage $V_m \sin(\omega t \pm \phi)$ is applied to it. The current drawn by these impedances are $i_1 = 20 \sin \omega t$, $i_2 = 40 \sin(\omega t + 30)$, $i_3 = I_{m3} \sin(\omega t \pm \phi_3)$ and the total current drawn from the supply is $i = 25\sin(\omega t + 30)$ amp. Calculate (i) the current i_3 in the form: $I_{m3} \sin(\omega t \pm \phi_3)$; (ii) if the equipment impedance of these three parallel branches is $\bar{Z} = (6 + j8\ \Omega)$, find the expression for the supply voltage in the form $V_m \sin(\omega t \pm \phi)$; (iii) Total power (active) drawn from the mains; (iv) the impedance Z_1.

Solution

Given:

$$i_1 = 20 \sin \omega t$$
$$i_2 = 40 \sin(\omega t + 30)$$
$$i = 25 \sin(\omega t + 30)$$
$$\bar{Z} = (6 + j8)\ \Omega = (10\ \angle 53.13)\ \Omega$$

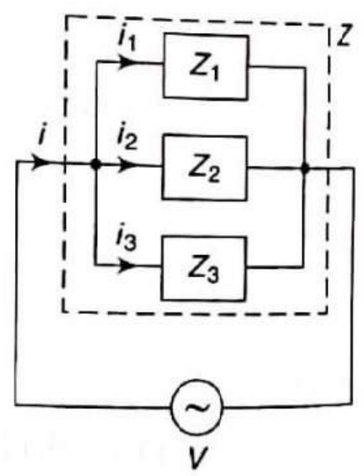

Fig. 2.143

Converting the standard sinusoidal form into polar forms,

$$\bar{I}_1 = (14.14\ \angle 0)\ \text{A}$$
$$\bar{I}_2 = (28.28\ \angle 30)\ \text{A}$$
$$I = (17.68\ \angle 30)\ \text{A}$$

(i) $\bar{I} = \bar{I}_1 + \bar{I}_2 + \bar{I}_3$

So, $\bar{I}_3 = \bar{I} - (\bar{I}_1 + \bar{I}_2)$

$$= (17.68\ \angle 30) - [(14.14\ \angle 0) + (28.28\ \angle 30)]$$
$$= (15.31 + j8.84) - [(14.14 + j0) + (24.49 + j14.14)]$$
$$= (15.31 + j8.84) - (38.63 + j14.14)$$
$$= (-23.32 - j5.3)\ \text{A}$$
$$= (23.91\ \angle -167.2)\ \text{A}$$

Converting the polar form into standard sinusoidal form,

$$i_3 = 33.81 \sin(\omega t - 167.2)$$

(ii) Supply voltage, $\bar{V} = \bar{I}\bar{Z}$

$$= (17.68\ \angle 30)(10\ \angle 53.13)$$
$$= (176.8\ \angle 83.13)\ \text{V}$$

Converting the polar form into standard sinusoidal form

$$v = 250 \sin(\omega t + 83.13)$$

(iii) Active power, $P = VI \cos \phi$

$$= 176.8 \times 17.68 \times \cos 53.13$$
$$= 1875\ \text{W}$$

(iv) Impedance, $Z_1 = \frac{\bar{V}}{\bar{I}_1} = \frac{(176.8\ \angle 83.13)}{(14.14\ \angle 0)}$

$$= (12.5\ \angle 83.13)\ \Omega$$

Example 2.80 Two impedances $(R_1 - jX_{C1})$ and $(R_2 + jX_{L2})$ are connected in parallel across supply voltage, $v = 100\sqrt{2}\ \sin(314t)$. The current flowing through the two impedances are given by $i_1 = 10\sqrt{2}\ \sin(314t + \pi/4)$ and $i_2 = 10\sqrt{2}\ \sin(314t + \pi/4)$, respectively. Find the equation of instantaneous value of total current drawn from supply and also find the values of R_1, R_2, X_{c1}, and X_{L2}.

Solution

The conditions of the example are shown in Fig. 2.144.

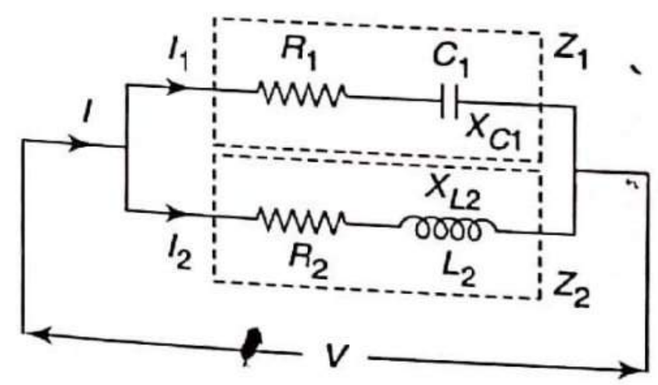

Fig. 2.144

Equation of branch current i_1 is given as:

$$i_1 = 10\sqrt{2}\ \sin(314t + \pi/4)$$

So, $I_1 = \frac{I_m}{\sqrt{2}} = \frac{10\sqrt{2}}{\sqrt{2}} = 10\ \text{A}$

So, $\bar{I}_1 = (10\ \angle 45°)\ \text{A}$ (Polar form)

$\bar{I}_1 = (7.071 + j7.071)\ \text{A}$ (Rectangular form)

Equation of branch current i_2 is given as:

$$i_2 = 10\sqrt{2}\ \sin(314t + \pi/4)$$

So, $I_2 = \frac{I_m}{\sqrt{2}} = \frac{10\sqrt{2}}{\sqrt{2}} = 10$ A

So, $\bar{I}_2 = (10 \angle -45°)$ A (Polar form)

$\bar{I}_2 = (7.071 - j7.071)$ A (Rectangular form)

Now, total current of the circuit:

$$\bar{I} = \bar{I}_1 + \bar{I}_2$$

$\therefore$ $\bar{I} = (7.071 + j7.071) + (7.071 - j7.071)$

$\therefore$ $\bar{I} = (14.142 + j0)$ (Rectangular form)

$\therefore$ $\bar{I} = (14.142 \angle 0)$ (Polar form)

Now, equation of instantaneous value of total current:

$$I_m = \sqrt{2} I = \sqrt{2} \times 14.142 = 20 \text{ A}$$

$\therefore$ $i = 20 \sin (314t)$

From equation of voltage,

$$V = \frac{V_m}{\sqrt{2}} = \frac{100\sqrt{2}}{\sqrt{2}} = 100 \text{ V}$$

Taking applied voltage as reference,

$$\bar{V} = (100 \angle 0) \text{ V}$$

Now, impedance of first branch:

$$\bar{Z}_1 = \frac{\bar{V}}{\bar{I}_1} = \frac{(100 \angle 0)}{(10 \angle 45)}$$

$\therefore$ $\bar{Z}_1 = (10 \angle -45)\ \Omega$ (Polar form)

$\therefore$ $\bar{Z}_1 = (7.071 - j7.071)\ \Omega$ (Rectangular form)

So, $R_1 = 7.071\ \Omega$ and $X_{C1} = 7.071\ \Omega$

Now, impedance of second branch:

$$\bar{Z}_2 = \frac{\bar{V}}{\bar{I}_2} = \frac{(100 \angle 0)}{(10 \angle -45)}$$

$\therefore$ $\bar{Z}_2 = (10 \angle 45)\ \Omega$ (Polar form)

$\therefore$ $\bar{Z}_2 = (7.071 + j7.071)$ (Rectangular form)

So, $R_2 = 7.071\ \Omega$ and $X_{L2} = 7.071\ \Omega$

Example 2.81 A parallel circuit of 25 Ω resistor, 64 mH inductor, and 80 μF capacitor is connected across: 110 V, 50 Hz, single phase supply, as shown in Fig. 2.145. Calculate the current in individual element, the total current drawn from the supply, and the overall power factor of the circuit. Draw a neat phasor diagram.

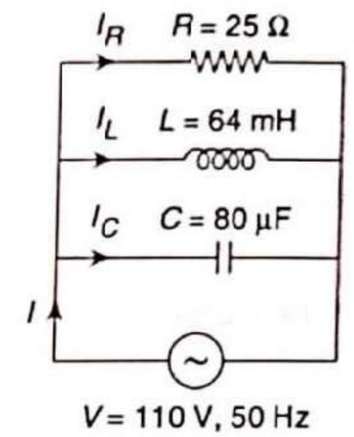

Fig. 2.145

Solution

Inductive reactance,

$$X_L = 2\pi f L = 2\pi \times 50 \times 64 \times 10^{-3} = 20.106\ \Omega$$

Capacitive reactance,

$$X_C = \frac{1}{2\pi f C} = \frac{1}{2\pi \times 50 \times 80 \times 10^{-6}} = 39.79\ \Omega$$

Marking the different impdances in the circuit, we get,

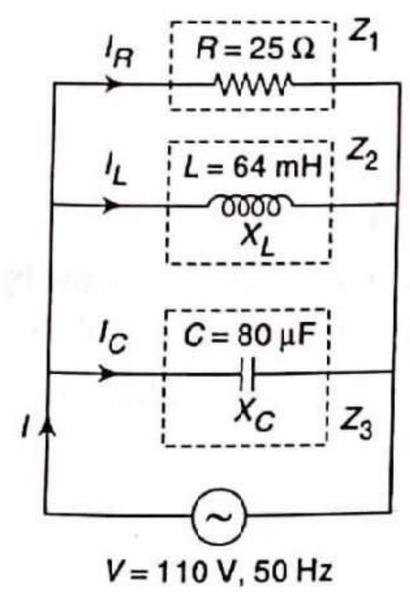

Fig. 2.146

Taking applied voltage as reference,

$$\bar{V} = (110 \angle 0) \text{ V}$$

Now, $\bar{Z}_1 = (25 \angle 0)\ \Omega$

$$\bar{Z}_2 = (0 + j20.106)\ \Omega$$

So, $$\bar{Z}_2 = (20.106\ \angle 90)\ \Omega$$

$$\bar{Z}_3 = (0 - j39.79)\ \Omega$$

$$\bar{Z}_3 = (39.79\ \angle -90)\ \Omega$$

So, branch currents can be calculated as:

$$\bar{I}_R = \frac{\bar{V}}{\bar{Z}_1} = \frac{(110\ \angle 0)}{(25\ \angle 0)} = (4.4\ \angle 0)\ \text{A}$$

$$\bar{I}_L = \frac{\bar{V}}{\bar{Z}_2} = \frac{(110\ \angle 0)}{(20.106\ \angle 90)} = (5.47\ \angle -90)\ \text{A}$$

$$\bar{I}_C = \frac{\bar{V}}{\bar{Z}_3} = \frac{(110\ \angle 0)}{(39.79\ \angle -90)} = (2.76\ \angle 90)\ \text{A}$$

Now, total current drawn from supply,

$$\bar{I} = \bar{I}_R + \bar{I}_L + \bar{I}_C$$

$$= (4.4\ \angle 0) + (5.47\ \angle -90) + (2.76\ \angle 90)$$

$$= (4.4 + j0) + (0 - j5.47) + (0 + j2.76)$$

$$= (4.4 - j2.71)\ \text{A} \qquad \text{(Rectangular form)}$$

$$= (5.17\ \angle -31.63)\ \text{A} \qquad \text{(Polar form)}$$

From polar form of V and I, current lags to voltage by 31.63°. Thus, the overall circuit is inductive and the phase angle of circuit, $\phi = 31.63$.

$\therefore$ pf = cos ϕ = cos (31.63) = 0.8515 lagging

Phasor diagram:

We have, $\bar{I}_R = (4.4\ \angle 0)$ A

$\bar{I}_L = (5.47\ \angle -90)$ A

$\bar{I}_C = (2.76\ \angle 90)$ A

$I = (5.17\ \angle -31.63)$ A

Taking scale, 1 cm = 1 A; and taking V as reference, we get,

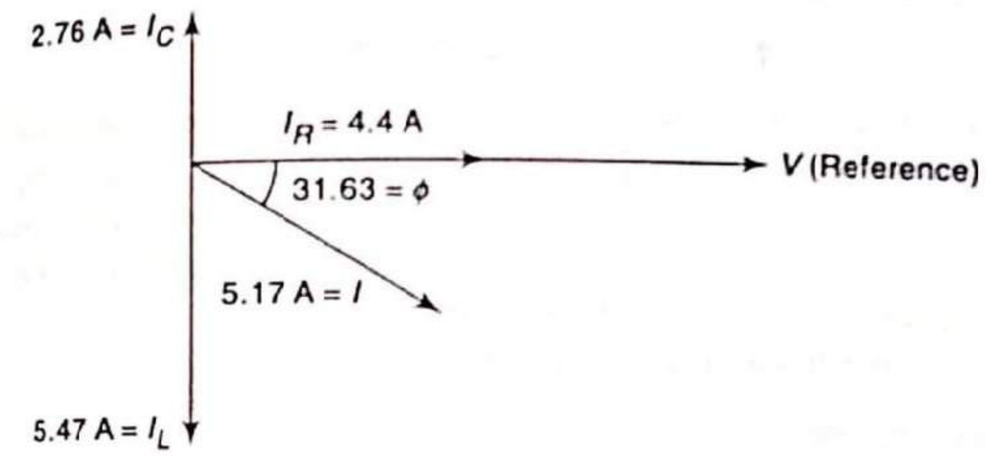

Fig. 2.147

2.3.3 Admittance (Y)

The admittance is defined as the reciprocal of impedance, i.e.,

$$\text{Admittance, } Y = \frac{1}{Z} = \frac{I}{V} \quad \text{or} \quad \bar{Y} = \frac{1}{\bar{Z}} = \frac{\bar{I}}{\bar{V}}$$

The unit of admittance is mho (ohm spelt backward) and its symbol is ℧. The admittance of the circuit may be considered as a measure of the ease with which a circuit can conduct alternating current.

Thus, a circuit with higher value of admittance will have a higher value of current.

Consider a parallel circuit as shown in Fig. 2.148.

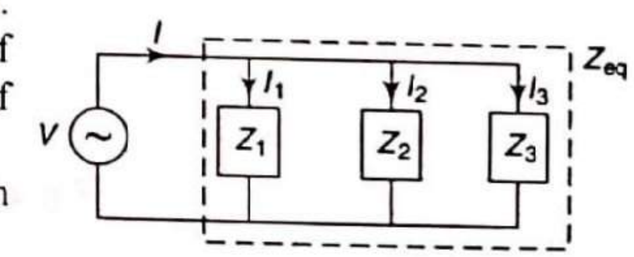

Fig. 2.148 Parallel circuit

By law of parallel circuit,

$$\frac{1}{\bar{Z}_{eq}} = \frac{1}{\bar{Z}_1} + \frac{1}{\bar{Z}_2} + \frac{1}{\bar{Z}_3}$$

Since admittance is reciprocal of impedance, we have

$$\bar{Y}_{eq} = \bar{Y}_1 + \bar{Y}_2 + \bar{Y}_3$$

where Y_1, Y_2, and Y_3 are the individual admittances of the parallel branches and Y_{eq} is the total or equivalent admittance of the circuit.

So, Line current, $\bar{I} = \dfrac{\bar{V}}{\bar{Z}_{eq}} = \bar{V}\,\bar{Y}_{eq}$

Components of admittance

The impedance of the circuit can be expressed in the complex form as $\bar{Z} = (R + jX_L)\ \Omega$ or $\bar{Z} = (R - jX_C)\ \Omega$ depending upon the nature of reactance, where R is the resistance or in phase component of Z while X_L or X_C is the reactive or quadrature component of Z. The reciprocal of impedance (i.e., admittance) will also have a complex form.

Therefore, admittance $\bar{Y}$ can be expressed as

$$\bar{Y} = (G - jB_L)\,\mho \quad \text{or} \quad \bar{Y} = (G + jB_C)\,\mho$$

where G is called conductance and represents the in-phase component of $\bar{Y}$, while B is called the susceptance and represents the quadrature component of $\bar{Y}$. The susceptance of an inductance is specially called inductive susceptance B_L whereas that of capacitance is called capacitive susceptance B_C. Note that B_L is always negative while B_C is always positive.

The units of G and B will also be mho ($\mho$).

Admittance triangle

Since admittance has in-phase component (i.e., G) as well as quadrature component (i.e., B_L or B_C), it can be represented by a right-angled triangle, called admittance triangle.

(i) For an inductive circuit, the impedance and admittance triangle are shown in Fig. 2.149.

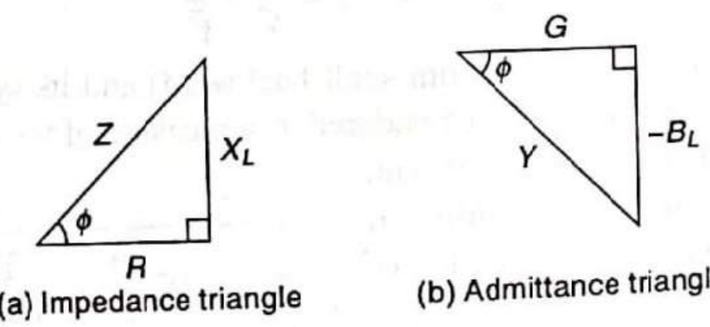

(a) Impedance triangle (b) Admittance triangle

Fig. 2.149

Note that admittance angle is equal to the impedance angle but is negative.

Conductance, $G = Y\cos\phi = \dfrac{1}{Z} \times \dfrac{R}{Z}$

So, $$G = \frac{R}{Z^2} = \frac{R}{R^2 + X_L^2}\,\mho$$

Susceptance, $B_L = Y\sin\phi = \dfrac{1}{Z} \times \dfrac{X_L}{Z}$

So, $$B_L = \frac{X_L}{Z^2} = \frac{X_L}{R^2 + X_L^2}\,\mho$$

(ii) For a capacitive circuit, the impedance and admittance triangle are shown in Fig. 2.150.

Conductance, $G = Y\cos\phi = \dfrac{1}{Z} \times \dfrac{R}{Z}$

So, $$G = \frac{R}{Z^2} = \frac{R}{R^2 + X_C^2}\,\mho$$

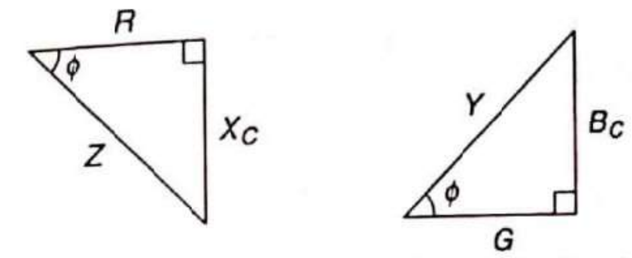

(a) Impedance triangle (b) Admittance triangle

Fig. 2.150

Susceptance, $B_C = Y\sin\phi = \dfrac{1}{Z} \cdot \dfrac{X_C}{Z}$

So, $$B_C = \frac{X_C}{Z^2} = \frac{X_C}{R^2 + X_C^2}\,\mho$$

Example 2.82 Calculate the admittance ($\bar{Y}$) and draw the admittance triangle of the circuit shown in Fig. 2.151.

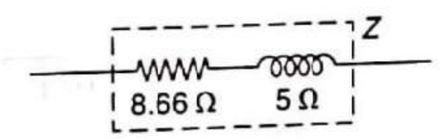

Fig. 2.151

Solution

Circuit impedance, $\bar{Z} = (8.66 + j5)\ \Omega$
$= (10 \angle 30)\ \Omega$

So, Circuit admittance, $\bar{Y} = \dfrac{1}{\bar{Z}}$

$$= \frac{1}{(10 \angle 30)}$$
$$= (0.1 \angle -30)\ \mho$$
$$= (0.0866 - j0.05)\ \mho$$

From polar form of admittance, $Y = 0.1\ \mho$ and $\phi = -30°$.

From rectangular form of admittance,

$G = 0.0866\ \mho$ and $B_L = 0.05\ \mho$

The admittance triangle is shown in Fig. 2.152.

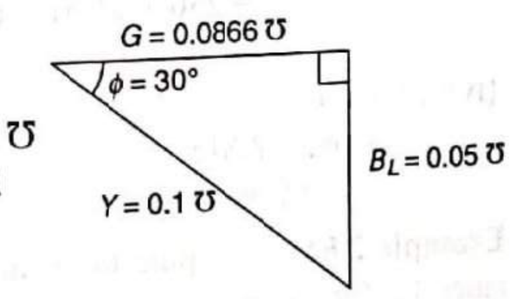

Fig. 2.152

Example 2.83 Three loads are placed across 230 V, 50 Hz supply. The loads are $(10\angle -30)\ \Omega$; $(20\angle 60)\ \Omega$ and $(40\angle 0)\ \Omega$. Determine (i) admittance, (ii) equivalent impedance, (iii) power consumed, and (iv) power factor.

Solution

The conditions in the example are shown in Fig. 2.153.

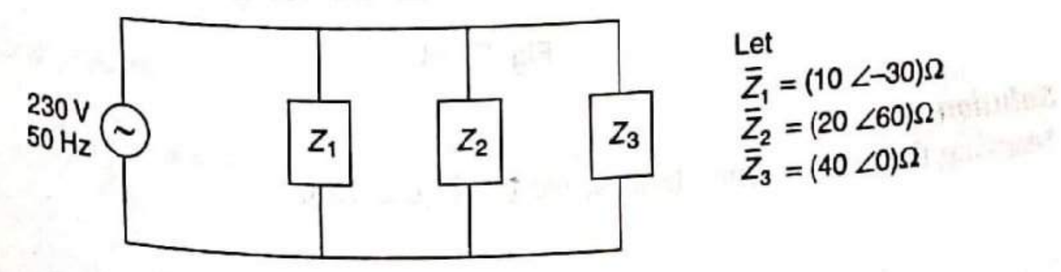

Fig. 2.153

(i) $\bar{Y}_1 = \frac{1}{\bar{Z}_1} = \frac{1}{(10\angle -30)} = (0.1\ \angle 30)\ \mho$

$\bar{Y}_2 = \frac{1}{\bar{Z}_2} = \frac{1}{(20\angle 60)} = (0.05\ \angle -60)\ \mho$

$\bar{Y}_3 = \frac{1}{\bar{Z}_3} = \frac{1}{(40\angle 0)} = (0.025\ \angle 0)\ \mho$

The total admittance of the circuit,

$$\begin{aligned}\bar{Y} &= \bar{Y}_1 + \bar{Y}_2 + \bar{Y}_3\\ &= (0.1\ \angle 30) + (0.05\ \angle -60) + (0.025\ \angle 0)\\ &= (0.0866 + j0.05) + (0.025 - j0.0433) + (0.025 + j0)\\ &= (0.1366 + j0.0067)\ \mho\\ &= (0.137\ \angle 2.81)\ \mho\end{aligned}$$

(ii) Equivalent impedance of the circuit,

$$\bar{Z} = \frac{1}{\bar{Y}} = \frac{1}{(0.137\angle 2.81)} = (7.3\ \angle -2.81)\ \Omega$$

(iii) Total current, $I = \frac{V}{Z} = \frac{230}{7.3} = 31.51$ A

Power consumed by the circuit,

$$\begin{aligned}P &= VI\cos\phi\\ &= 230 \times 31.51 \times \cos(-2.81)\\ &= 7238\ \text{W}\end{aligned}$$

(iv) $\text{pf} = \cos\phi$
$= \cos(-2.81)$
$= 0.998$ leading

Example 2.84 Compute the equivalent impedance Z_{eq} and equivalent admittance Y_{eq} for a circuit shown in Fig. 2.154. Also calculate the total current.

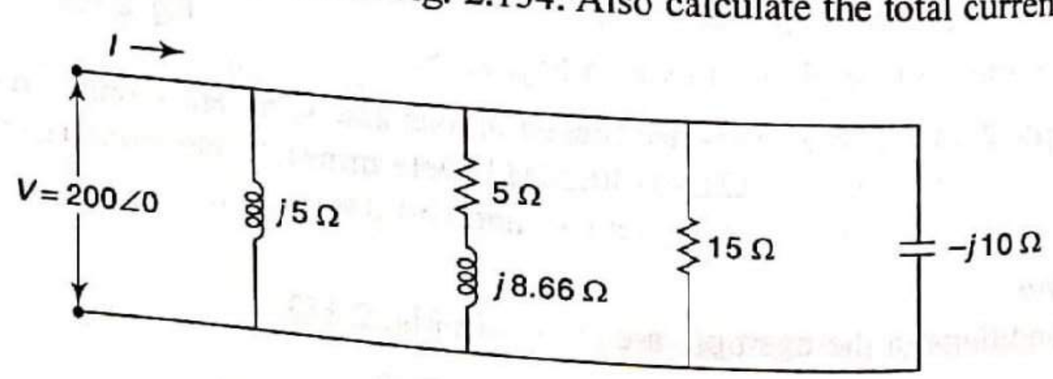

Fig. 2.154

Solution

Marking the various impedances, we get Fig. 2.155.

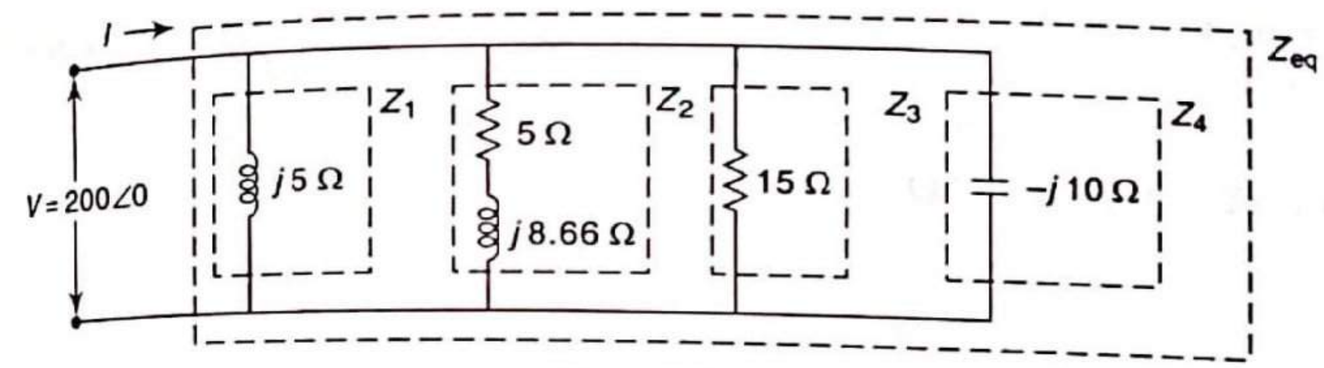

Fig. 2.155

Given: $\bar{Z}_1 = (0 + j5)\ \Omega = (5\ \angle 90)\ \Omega$

$\bar{Z}_2 = (5 + j8.66)\ \Omega = (10\ \angle 60)\ \Omega$

$\bar{Z}_3 = (15 + j0)\ \Omega = (15\ \angle 0)\ \Omega$

$\bar{Z}_4 = (0 - j10)\ \Omega = (10\ \angle -90)\ \Omega$

The individual admittances of the parallel branches are:

$\bar{Y}_1 = \frac{1}{\bar{Z}_1} = \frac{1}{(5\angle 90)} = (0.2\ \angle -90)\ \mho$

$\bar{Y}_2 = \frac{1}{\bar{Z}_2} = \frac{1}{(10\angle 60)} = (0.1\ \angle -60)\ \mho$

$\bar{Y}_3 = \frac{1}{\bar{Z}_3} = \frac{1}{(15\angle 0)} = (0.0667\ \angle 0)\ \mho$

$\bar{Y}_4 = \frac{1}{\bar{Z}_4} = \frac{1}{(10\angle -90)} = (0.1\ \angle 90)\ \mho$

The equivalent admittance of the circuit,

$$\begin{aligned}\bar{Y}_{eq} &= \bar{Y}_1 + \bar{Y}_2 + \bar{Y}_3 + \bar{Y}_4\\ &= (0.2\ \angle -90) + (0.1\ \angle -60) + (0.0677\ \angle 0) + (0.1\ \angle 90)\\ &= (0 - j0.2) + (0.05 - j0.0866) + (0.0677 + j0) + (0 + j0.1)\\ &= (0.1177 - j0.1866)\ \mho\\ &= (0.22\ \angle -57.76)\ \mho\end{aligned}$$

The equivalent impedance of the circuit,

$$\bar{Z}_{eq} = \frac{1}{\bar{Y}_{eq}} = \frac{1}{(0.22\ \angle -57.76)} = (4.545\ \angle 57.76)\ \Omega$$

The total current,

$$\bar{I} = \frac{\bar{V}}{\bar{Z}_{eq}} = \bar{V}\,\bar{Y}_{eq} = (200\ \angle 0)\ (0.22\ \angle -57.76) = (44\ \angle -57.76)\ \text{A}$$

Example 2.85 Draw the admittance triangle between the terminals A and B, labelling its sides with appropriate value and units in case of

(i) $X_L = 4\ \Omega, X_C = 8\Omega$

(ii) $X_L = 10\Omega, X_C = 5\Omega$

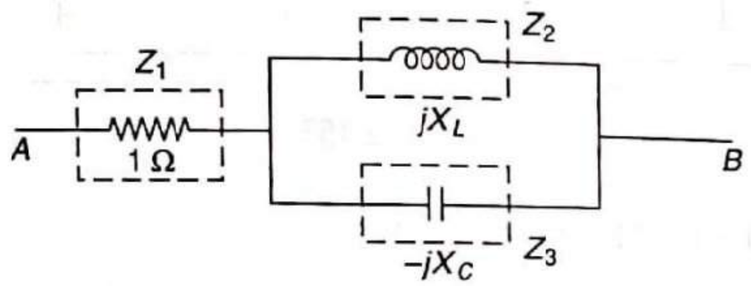

Fig. 2.156

Solution

Case (i) When $X_L = 4\ \Omega$ and $X_C = 8\ \Omega$

$$\bar{Z}_1 = (1 + j0)\ \Omega = (1\ \angle 0)\ \Omega$$

$$\bar{Z}_2 = (0 + j4)\ \Omega = (4\ \angle 90)\ \Omega$$

$$\bar{Z}_3 = (0 - j8)\ \Omega = (8\ \angle -90)\ \Omega$$

$$\bar{Z}_{eq} = \bar{Z}_1 + \frac{\bar{Z}_2 \bar{Z}_3}{\bar{Z}_2 + \bar{Z}_3}$$

$$= (1 + j0) + \frac{(4\ \angle 90)(8\ \angle -90)}{(0 + j4) + (0 - j8)}$$

$$= (1 + j0) + \frac{(32\ \angle 0)}{(0 - j4)}$$

$$= (1 + j0) + \frac{(32\ \angle 0)}{(4\ \angle -90)}$$

$$= (1 + j0) + (8\ \angle 90)$$

$$= (1 + j0) + (0 + j8)$$

$$= (1 + j8)\ \Omega$$

$$= (8.062\ \angle 82.87)\ \Omega$$

Equivalent admittance, $\bar{Y} = \dfrac{1}{\bar{Z}_{eq}} = \dfrac{1}{(8.062\ \angle 82.87)} = (0.124\ \angle -82.87)\ \mho$

$$= (0.0154 - j0.123)\ \mho$$

The admittance triangle is shown in Fig. 2.157.

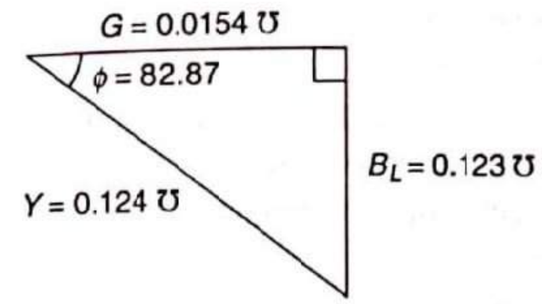

Fig. 2.157

Case (ii) When $X_L = 10\ \Omega$ and $X_C = 5\ \Omega$

We have $\bar{Z}_1 = (1 + j0)\ \Omega = (1\ \angle 0)\ \Omega$

$$\bar{Z}_2 = (0 + j10)\ \Omega = (10\ \angle 90)\ \Omega$$

$$\bar{Z}_3 = (0 - j5)\ \Omega = (5\ \angle -90)\ \Omega$$

$$\bar{Z}_{eq} = \bar{Z}_1 + \frac{\bar{Z}_2 \bar{Z}_3}{\bar{Z}_2 + \bar{Z}_3}$$

$$= (1 + j0) + \frac{(10\ \angle 90)(5\ \angle -90)}{(0 + j10) + (0 - j5)}$$

$$= (1 + j0) + \frac{(50\ \angle 0)}{(0 + j5)}$$

$$= (1 + j0) + \frac{(50\ \angle 0)}{(5\ \angle 90)}$$

$$= (1 + j0) + (10\ \angle -90)$$

$$= (1 + j0) + (0 - j10)$$

$$= (1 - j10)\ \Omega$$

$$= (10.05\ \angle -84.29)\ \Omega$$

Equivalent admittance, $\bar{Y}_{eq} = \dfrac{1}{\bar{Z}_{eq}} = \dfrac{1}{(10.05\ \angle -84.29)} = (0.0995\ \angle 84.29)\ \mho$

$$= (0.009899 + j0.099)\ \mho$$

The admittance triangle is shown in Fig. 2.158.

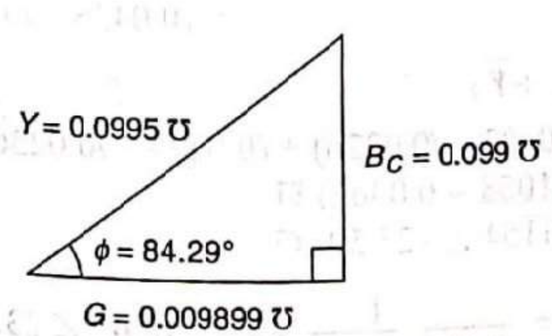

Fig. 2.158

Example 2.86 Two impedances $(14 + j5)\ \Omega$ and $(18 + j10)\ \Omega$ are connected in parallel across 200 V, 50 Hz supply. Determine:

(i) admittance of each branch and of the entire circuit
(ii) current in each branch and total current
(iii) power and power factor of each branch
(iv) total power factor

Also draw phasor diagram.

Solution

The conditions in the example are shown in Fig. 2.159.

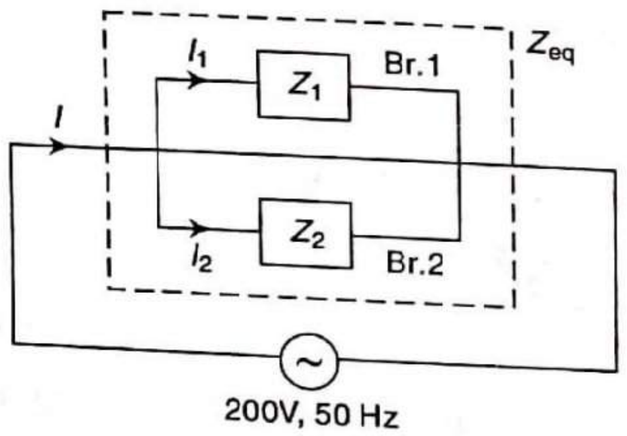

Fig. 2.159

Let $\overline{Z}_1 = (14 + j5)\ \Omega = (14.87 \angle 19.65)\ \Omega$

$\overline{Z}_2 = (18 + j10)\ \Omega = (20.59 \angle 29.05)\ \Omega$

Taking V as reference,

$\overline{V} = (200 \angle 0)$ V

(i) Admittance of branch 1,

$$\overline{Y}_1 = \frac{1}{\overline{Z}_1} = \frac{1}{(14.87 \angle 19.65)} = (0.0672 \angle -19.65)\ \mho$$

$$= (0.0633 - j0.0226)\ \mho$$

Admittance of branch 2,

$$\overline{Y}_2 = \frac{1}{\overline{Z}_2} = \frac{1}{(20.59 \angle 29.05)} = (0.0486 \angle -29.05)\ \mho$$

$$= (0.0425 - j0.0236)\ \mho$$

Now, $\overline{Y}_{eq} = \overline{Y}_1 + \overline{Y}_2$

$$= (0.0633 - j0.0226) + (0.0425 - j0.0236)$$
$$= (0.1058 - 0.0462)\ \mho$$
$$= (0.1154 \angle -23.59)\ \mho$$

Also $\overline{Z}_{eq} = \dfrac{1}{\overline{Y}_{eq}} = \dfrac{1}{(0.1154 \angle -23.59)} = (8.67 \angle 23.59)\ \Omega$

(ii) Branch current, $\overline{I}_1 = \dfrac{\overline{V}}{\overline{Z}_1}$ or $\overline{I}_1 = \overline{V}\,\overline{Y}_1$

So, $\overline{I}_1 = \dfrac{(200 \angle 0)}{(14.87 \angle 19.65)} = (13.45 \angle -19.65)$ A

Branch current, $\overline{I}_2 = \dfrac{\overline{V}}{\overline{Z}_2}$ or $\overline{I}_2 = \overline{V}\,\overline{Y}_2$

So, $\overline{I}_2 = \dfrac{(200 \angle 0)}{(20.59 \angle 29.05)} = (9.71 \angle -29.05)$ A

Total current, $\overline{I} = \dfrac{\overline{V}}{\overline{Z}_{eq}}$ or $\overline{I} = \overline{Y}\,\overline{V}$ or $\overline{I} = \overline{I}_1 + \overline{I}_2$

So, $\overline{I} = \dfrac{(200 \angle 0)}{(8.67 \angle 23.59)} = (23.07 \angle -23.59)$ A

(iii) Power consumed by branch 1,

$P_1 = I_1^2 R_1 = (13.45)^2 \times 14 = 2.533$ kW

Power consumed by branch 2,

$P_2 = I_2^2 R_2 = (9.71)^2 \times 18 = 1.697$ kW

Power factor of branch 1, $(\text{pf})_1 = \cos \phi_1 = \cos (19.65) = 0.942$ lagging

Power factor of branch 2, $(\text{pf})_2 = \cos \phi_2 = \cos (29.05) = 0.874$ lagging

(iv) Total power factor, $(\text{pf}) = \cos \phi = \cos (23.59) = 0.9164$ lagging

(v) Phasor diagram:

We know that, $\overline{I}_1 = (13.45 \angle -19.65)$ A

$\overline{I}_2 = (9.71 \angle -29.05)$ A

Scale: 1 cm = 2 A

Taking V as reference phasor,

$\overline{I} = \overline{I}_1 + \overline{I}_2$

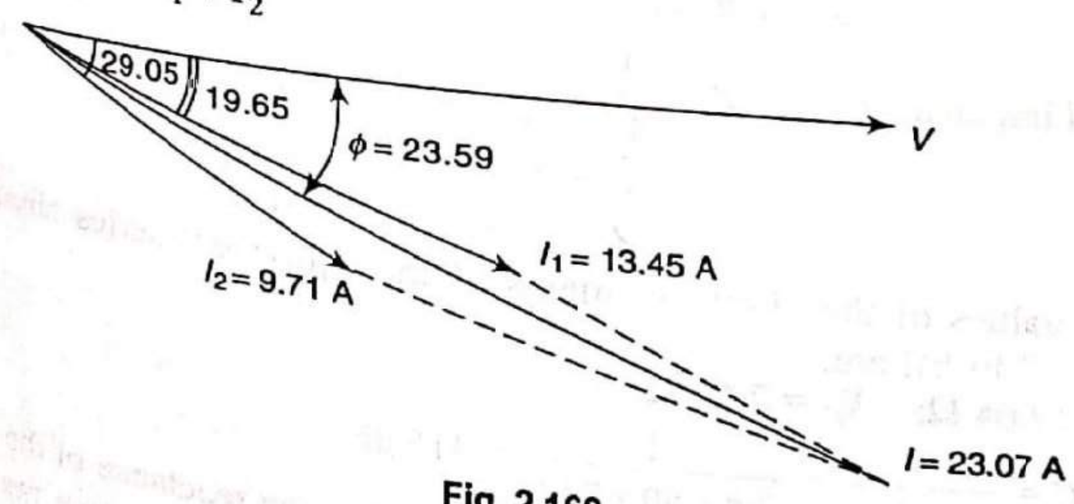

Fig. 2.160

Example 2.87 Two parallel circuits comprise respectively (a) a coil of resistance 20 Ω and inductance 0.08 H (b) a capacitor of capacitance 200 μF in series with e resistance of 10 Ω. If the circuit is connected to 230 V, 50 Hz supply, determine

(i) supply current and power factor
(ii) equivalent series circuit
(iii) the value and nature of reactance to be connected in series with the circuit to bring the overall power factor to unity.

Solution

The conditions in the example are shown in Fig. 2.140(a).

$$L = 0.08 \text{ H}; X_L = 2\pi fL = 2\pi \times 50 \times 0.08 = 25.13\ \Omega$$

$$C = 200 \times 10^{-6} \text{ F}; X_C = \frac{1}{2\pi fC} = \frac{1}{2\pi \times 50 \times 200 \times 10^{-6}} = 15.92\ \Omega$$

$$\bar{Z}_1 = (20 + j25.13)\ \Omega = (32.12\ \angle 51.49)\ \Omega$$

$$\bar{Z}_2 = (10 - j15.92)\ \Omega = (18.8\ \angle -57.87)\ \Omega$$

$$\bar{Y}_1 = \frac{1}{\bar{Z}_1} = \frac{1}{(32.12\angle 51.49)} = (0.0311\ \angle -51.49)\ \mho$$

$$\bar{Y}_2 = \frac{1}{\bar{Z}_2} = \frac{1}{(18.8\angle -57.87)} = (0.0532\ \angle 57.87)\ \mho$$

So, Total admittance,

$$\begin{aligned}\bar{Y} &= \bar{Y}_1 + \bar{Y}_2 \\ &= (0.0311\ \angle -51.49) + (0.0532\ \angle 57.87) \\ &= (0.0194 - j0.0243) + (0.0283 + j0.045) \\ &= (0.0477 + j0.0207)\ \mho \\ &= (0.052 + \angle 23.46)\ \mho\end{aligned}$$

(i) Now, supply current, $\bar{I} = \bar{V}\bar{Y} = (230\ \angle 0)(0.052\ \angle 23.46)$
$= (11.96\ \angle 23.46)$ A

Power factor, pf = cos ϕ
= cos 23.46
= 0.917 lead

(ii) Total impedance, $\bar{Z} = \frac{1}{\bar{Y}} = \frac{1}{(0.052\ \angle 23.46)}$

So, $\bar{Z} = (19.23\ \angle -23.46)\ \Omega$

or $\bar{Z} = (17.64 - j7.66)\ \Omega$

The values of the circuit elements of the equivalent series circuit [see Fig. 2.140(b)] are:

$R = 17.64\ \Omega$; $X_C = 7.66\ \Omega$

So, $C = \frac{1}{2\pi f X_C} = \frac{1}{2\pi \times 50 \times 7.66} = 415\ \mu\text{F}$

(iii) In order that the circuit power factor is unity, the reactance of the circuit should be zero. To do so, we would connect an inductive reactance $X_L = 7.66\ \Omega$ in series with the circuit.

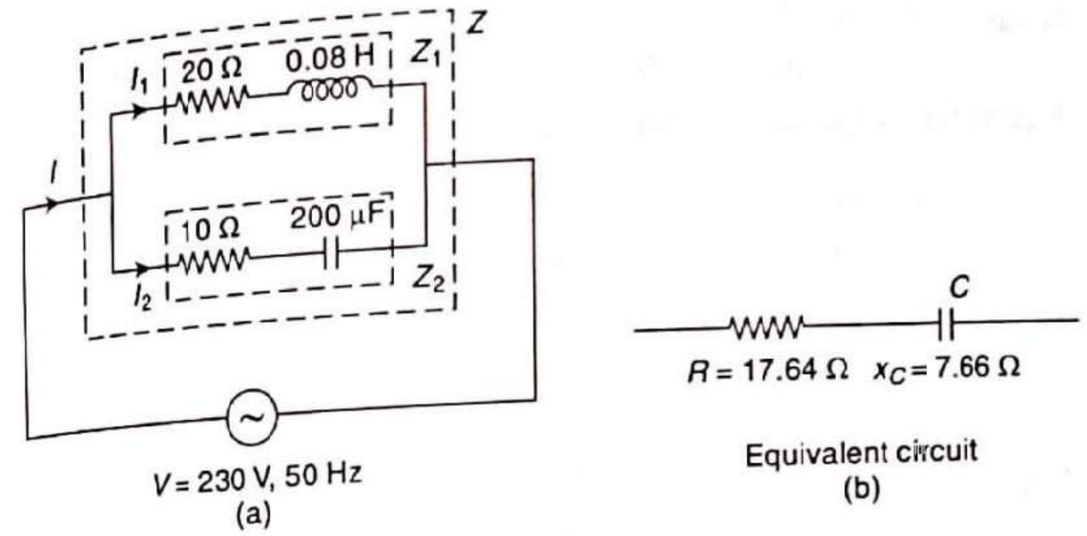

Fig. 2.161

Example 2.88 Applying admittance method to series-parallel circuit shown in Fig. 2.162. Find: (i) total impedance, (ii) supply current, and (iii) pf of entire circuit.

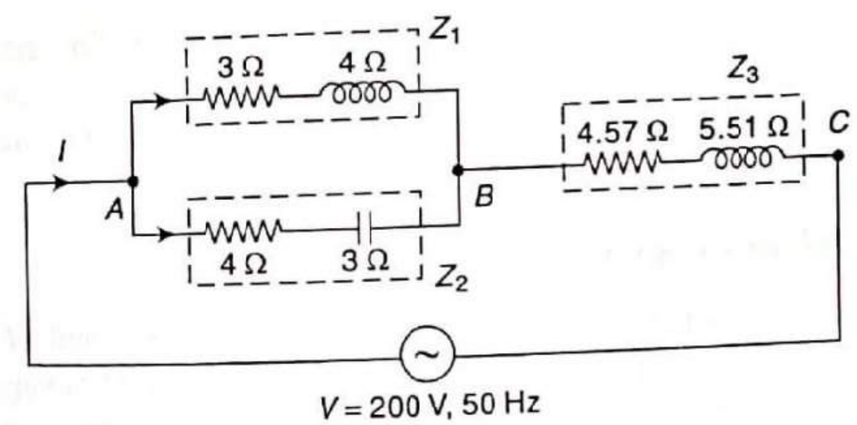

Fig. 2.162

Solution

Given: $\bar{Z}_1 = (3 + j4)\ \Omega = (5\ \angle 53.13)\ \Omega$

$\bar{Z}_2 = (4 - j3)\ \Omega = (5\ \angle -36.87)\ \Omega$

$\bar{Z}_3 = (4.57 + j5.51)\ \Omega = (7.16\ \angle 50.33)\ \Omega$

(i) It is a series–parallel circuit. We will first calculate the equivalent impedance of the parallel combination, i.e., Z_{AB}.

$$\bar{Y}_1 = \frac{1}{\bar{Z}_1} = \frac{1}{(5\angle 53.13)} = (0.2\ \angle -53.13)\ \mho$$

$$\bar{Y}_2 = \frac{1}{\bar{Z}_2} = \frac{1}{(5\angle -36.87)} = (0.2\ \angle 36.87)\ \mho$$

So, $\bar{Y}_{AB} = \bar{Y}_1 + \bar{Y}_2$

$$\begin{aligned}&= (0.2\ \angle -53.13) + (0.2\ \angle 36.87) \\ &= (0.12 - j0.16) + (0.16 + j0.12) \\ &= (0.28 - j0.04)\ \mho \\ &= (0.2828\ \angle -8.13)\ \mho\end{aligned}$$

Now, $\overline{Z}_{AB} = \dfrac{1}{\overline{Y}_{AB}} = \dfrac{1}{(0.2828 \angle -8.13)} = (3.54 \angle 8.13)\ \Omega$

Equivalent impedance of the circuit,

$$\begin{aligned}\overline{Z} &= \overline{Z}_{AB} + \overline{Z}_{BC}\\ &= (3.54 \angle 8.13) + (7.16 \angle 50.33)\\ &= (3.5 + j0.5) + (4.57 + j5.51)\\ &= (8.07 + j6.01)\ \Omega\\ &= (10.06 \angle 36.68)\ \Omega\end{aligned}$$

(ii) Supply current, $\overline{I} = \dfrac{\overline{V}}{\overline{Z}} = \dfrac{(200 \angle 0)}{(10.06 \angle 36.68)} = (19.88 \angle -36.68)$ A

(iii) Power factor of the entire circuit,

$$\begin{aligned}\text{pf} &= \cos\phi\\ &= \cos 36.68\\ &= 0.802 \text{ lagging}\end{aligned}$$

Note: From polar form of equivalent impedance, phase angle of the circuit, i.e., $\phi = 36.68$. As phase angle is positive the total circuit is inductive, means supply current lags behind to the applied voltage. Therefore, nature of the circuit power factor is lagging.

2.3.4 Parallel Resonance

Like series resonance, a parallel circuit containing reactive elements (L and C) is resonant when the circuit power factor is unity, i.e., applied voltage and the supply current are in phase. It is called a parallel resonance because it concerns a parallel circuit. The most common resonant parallel circuit is an inductor (coil) in parallel with a pure capacitor C as shown in Fig. 2.163(a). The phasor diagram of this parallel circuit is shown in Fig. 2.163(b). The coil current I_L has two

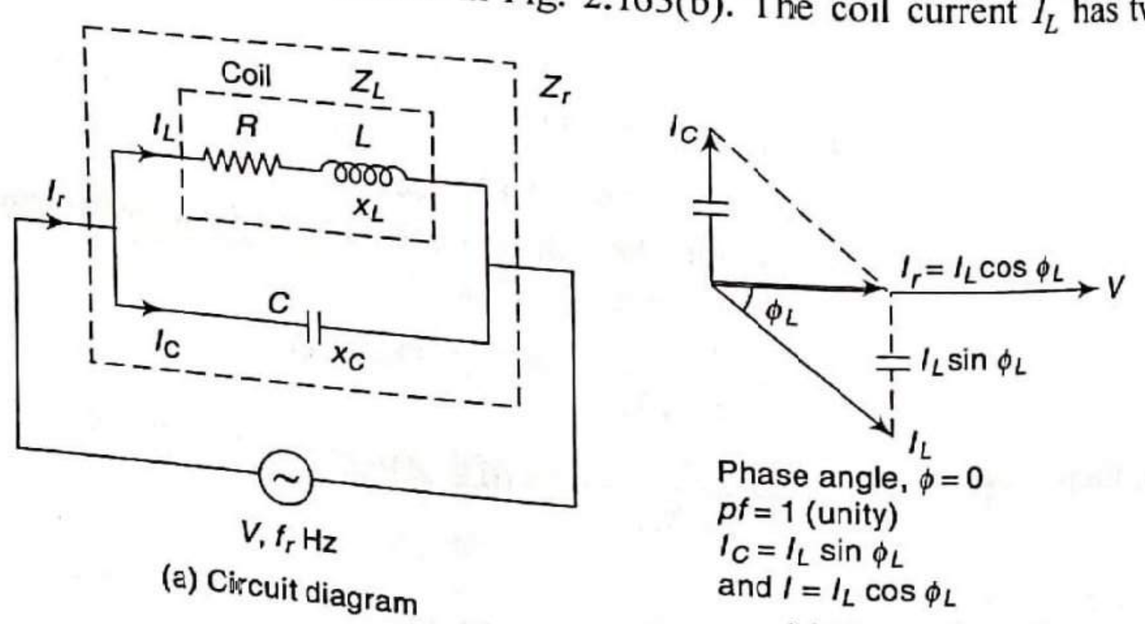

(a) Circuit diagram

(b) Phasor diagram (when $I_C = I_L \sin\phi_L$)

Fig. 2.163 Parallel resonance

components, viz active component $I_L \cos\phi_L$ and reactive component $I_L \sin\phi_L$. This parallel circuit will resonant when the circuit power factor is unity. This is possible only when the net reactive component of the circuit is zero,

i.e., $I_C - I_L \sin\phi_L = 0$

or $I_C = I_L \sin\phi_L$

or Reactive component of I_C = Reactive component of I_L

Resonance in a parallel circuit can be achieved by changing the supply frequency. Increase of frequency increase the reactance of the coil and consequently the coil impedance increases. The coil current I_L, therefore, decreases and lags behind the applied voltage V by a progressively greater angle. The capacitive branch current on the other hand, increases although it will always lead V by 90°. At some frequency f_r (called resonant frequency), I_C becomes equal to $I_L \sin\phi_L$ and resonance occurs.

(i) Resonance/resonant frequency (f_r)

The supply frequency at which parallel resonance occurs (i.e., reactive component of circuit current becomes zero) is called the resonant frequency.

At parallel resonance,

$$I_C = I_L \sin\phi_L$$

$$\frac{V}{X_C} = \frac{V}{Z_L} \cdot \frac{X_L}{Z_L}$$

$$\frac{1}{X_C} = \frac{X_L}{Z_L^2}$$

$$Z_L^2 = \frac{L}{C}$$

$$R^2 + X_L^2 = \frac{L}{C} \tag{2.25}$$

$$R^2 + (2\pi f_r L)^2 = \frac{L}{C}$$

$$(2\pi f_r L)^2 = \frac{L}{C} - R^2$$

$$f_r = \frac{1}{2\pi L}\sqrt{\frac{L}{C} - R^2}$$

$$f_r = \frac{1}{2\pi}\sqrt{\frac{1}{LC} - \frac{R^2}{L^2}} \tag{2.26}$$

If R is very very small,

$$f_r = \frac{1}{2\pi\sqrt{LC}} \tag{2.27}$$

(ii) Impedance at resonance (Z_r)

At parallel resonance,

$$I = I_L \cos \phi_L$$

or $$\frac{V}{Z_r} = \frac{V}{Z_L} \cdot \frac{R}{Z_L}$$

or $$\frac{1}{Z_r} = \frac{R}{Z_L^2}$$

or $$Z_r = \frac{Z_L^2}{R}$$

From Eq. (2.25), $Z_L^2 = \frac{L}{C}$

So, Circuit impedance, $$Z_r = \frac{L}{CR}\Omega \tag{2.28}$$

Thus, at parallel resonance, the circuit impedance is equal to L/CR. This is known as equivalent or dynamic impedance of the parallel circuit at resonance.

Z_r is the pure resistance because in the expression of Z_r, frequency term is not present. Also Z_r is very high because the ratio L/C is very large at parallel resonance.

As supply frequency changes, value of circuit impedance also varies. If we plot impedance–frequency graph for a parallel circuit shown in Fig. 2.163(a), the shape of the curve will be as shown in Fig. 2.164. Note that impedance of the circuit is maximum at resonance. As the frequency changes from resonance, the circuit impedance decreases very rapidly.

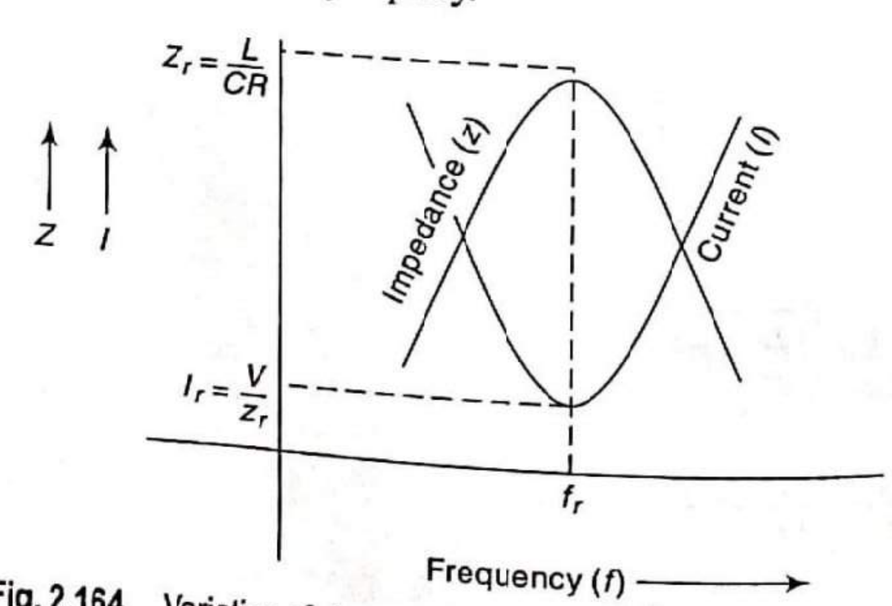

Fig. 2.164 Variation of circuit impedance and current with frequency

(iii) Circuit current at resonance (I_r)

At parallel resonance, the circuit impedance (Z_r) becomes maximum and the circuit current (I_r) is at minimum value. The current–frequency curve of the parallel circuit is shown in Fig. 2.143. Note that the value of line current is minimum at resonance.

At parallel resonance, the impedance of each branch (i.e., X_C and Z_L) is relatively small compared with circuit impedance (Z_r). Therefore, current flowing through the capacitor and coil are much greater than the line current I_r. But these currents are approximately 180° out of phase, therefore resultant current I_r is extremely small.

(iv) Q-factor of parallel resonance circuit

At parallel resonance, the current circulating between the two branches is many times greater than the line current. The current amplification produced by the resonance is termed as Q-factor of the parallel resonant circuit, i.e.,

$$Q\text{-factor} = \frac{I_L \text{ or } I_C}{I_r} \quad (\because I_L \cong I_C) \tag{2.29}$$

Let $$Q\text{-factor} = \frac{I_C}{I_r}$$

Now, $$I_C = \frac{V}{X_C} = 2\pi f_r CV \quad \text{and} \quad I_r = \frac{V}{(L/CR)}$$

So, $$Q\text{-factor} = \frac{2\pi f_r CV}{\frac{V}{\left(\frac{L}{CR}\right)}}$$

$$= \frac{2\pi f_r L}{R} \tag{2.30}$$

Now, $$f_r = \frac{1}{2\pi\sqrt{LC}}$$

By substituting the value of f_r in Eq. (2.30), we get

$$Q\text{-factor} = \frac{1}{R}\sqrt{\frac{L}{C}} \tag{2.31}$$

2.3.5 Comparison of Series and Parallel Resonant Circuits

Particular	Series circuit	Parallel circuit
1. Impedance at resonance	Minimum ($Z_r = R$)	Maximum ($Z_r = L/CR$)
2. Current at resonance	Maximum $\left(I_r = \frac{V}{R}\right)$	Minimum $\left(I_r = \frac{V}{Z_r}\right)$
3. Resonant frequency	$f_r = \frac{1}{2\pi\sqrt{LC}}$ Hz	$f_r = \frac{1}{2\pi}\sqrt{\frac{1}{LC} - \frac{R^2}{L^2}}$ Hz
4. Q-Factor	$= \frac{V_L \text{ or } V_C}{V}$	$= \frac{I_L \text{ or } I_C}{I}$
5. It magnifies	Voltage	Current
6. When $f < f_r$	Circuit is capacitive.	Circuit is inductive.
7. When $f > f_r$	Circuit is inductive.	Circuit is capacitive.

Example 2.89 A parallel circuit consists of a 2.5 μF capacitor and a coil whose resistance and inductance are 15 Ω and 260 mH, respectively. Determine (i) the resonant frequency, (ii) Q-factor of the circuit at resonance, and (iii) dynamic impedance of the circuit.

Solution

(i) Resonant frequency (f_r),

$$f_r = \frac{1}{2\pi}\sqrt{\frac{1}{LC} - \frac{R^2}{L^2}}$$

$$= \frac{1}{2\pi}\sqrt{\frac{1}{260\times10^{-3}\times2.5\times10^{-6}} - \frac{(15)^2}{(260\times10^{-3})^2}}$$

$$= 197.19 \text{ Hz}$$

(ii) Q-factor $= \frac{2\pi f_r L}{R} = \frac{2\pi\times197.19\times260\times10^{-3}}{15} = 21.48$

(iii) Dynamic impedance (Z_r),

$$Z_r = \frac{L}{CR} = \frac{260\times10^{-3}}{2.5\times10^{-6}\times15} = 6933.33\ \Omega$$

Example 2.90 An inductive coil of resistance 20 Ω and inductance 0.2 H is connected in parallel with 200 μF capacitor with variable frequency, 230 V supply. Find the resonant frequency at which the total current taken from the supply is in phase with supply voltage. Also find the value of this current. Draw the phasor diagram.

Solution

The conditions in the example are shown in Fig. 2.165.

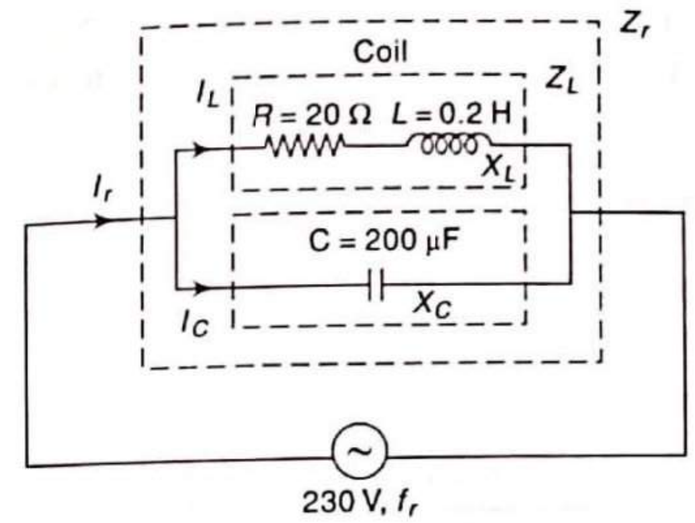

Fig. 2.165

Resonant frequency,

$$f_r = \frac{1}{2\pi}\sqrt{\frac{1}{LC} - \frac{R^2}{L^2}} \text{ Hz}$$

$$= \frac{1}{2\pi}\sqrt{\frac{1}{0.2\times200\times10^{-6}} - \frac{20^2}{(0.2)^2}}$$

$$= \frac{1}{2\pi}\sqrt{25000 - 10000}$$

$$= \frac{1}{2\pi}\sqrt{15000}$$

$$= 19.49 \text{ Hz}$$

Dynamic impedance of the circuit,

$$Z_r = \frac{L}{CR}$$

$$= \frac{0.2}{200\times10^{-6}\times20}$$

$$= 50\ \Omega$$

Circuit current at resonance,

$$I_r = \frac{V}{Z_r} = \frac{230}{50} = 4.6 \text{ A}$$

Phasor diagram (see Fig. 2.145):

For phasor diagram, we need to calculate the values of branch currents (I_L and I_C) and phase angle of the coil (ϕ_L).

Now, $$I_L = \frac{V}{Z_L} = \frac{230}{\sqrt{(20)^2 + (2\pi\times19.49\times0.2)^2}} = \frac{230}{31.62} = 7.274 \text{ A}$$

$$I_C = \frac{V}{X_C} = \frac{230}{\left(\dfrac{1}{2\pi \times 19.49 \times 200 \times 10^{-6}}\right)} = \frac{230}{40.83} = 5.63 \text{ A}$$

Phase angle of the coil,

$$\phi_L = \tan^{-1}\frac{X_L}{R}$$

$$= \tan^{-1}\frac{(2\pi f_r L)}{R}$$

$$= \tan^{-1}\frac{(2\pi \times 19.49 \times 0.2)}{20}$$

$$= \tan^{-1}\frac{24.49}{20}$$

So, $\phi_L = 50.76$

Take V as reference phasor.

We know that $\bar{I}_r = \bar{I}_L + \bar{I}_C$.

Now, $I_L = 7.274$ A

$I_C = 5.63$ A

$I_r = 4.6$ A

$\phi_L = 50.76°$

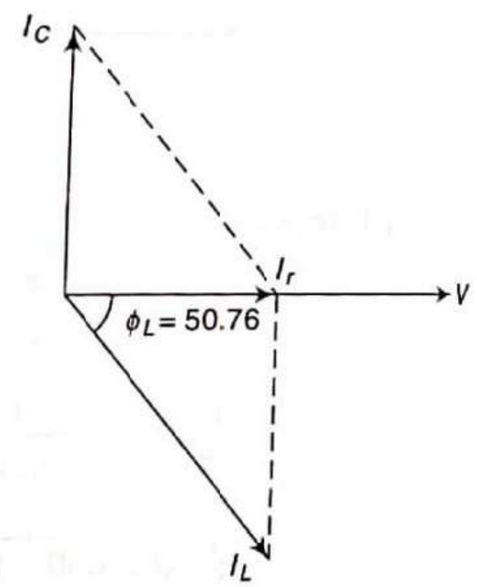

Fig. 2.166

Taking scale 1 cm = 1 A, the phasor diagram can be drawn as shown in Fig. 2.166.

Example 2.91 A coil takes a current of 1 A at 0.3 pf when connected to a 100 V, 50 Hz supply. Determine the value of the capacitance, which when connected in parallel with the coil, will reduce the line current to a minimum. Calculate the impedance of the parallel circuit at 50 Hz.

Solution

When a coil is connected to 100 V, 50 Hz supply, it takes a current of 1 A at 0.3 pf (see Fig. 2.167).

$(\text{pf})_{\text{coil}} = 0.3$

or $\cos\phi_L = 0.3$

or $\phi_L = 72.542$ (ϕ_L is the phase angle of the coil)

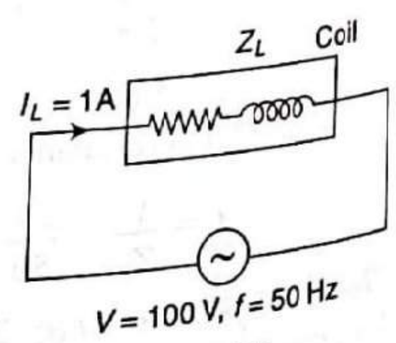

Fig. 2.167

Now, capacitor is connected across the coil (see Fig. 2.168). We need a value of C, so that the line current reduces to a minimum value, i.e., parallel resonance occurs at $f = 50$ Hz.

At resonance, $I_C = I_L \sin\phi_L$

So, $I_C = 1 \times \sin(72.542)$

or $I_C = 0.954$ A

Now, $X_C = \dfrac{V}{I_C} = \dfrac{100}{0.954} = 104.82\ \Omega$

So, $\dfrac{1}{2\pi f_r C} = 104.82$

or $\dfrac{1}{2\pi \times 50 \times C} = 104.82$

or $C = 30.37 \times 10^{-6}$ F

$= 30.37\ \mu$F

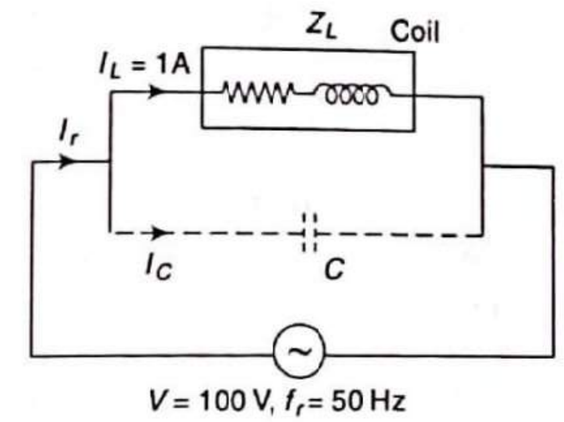

Fig. 2.168

At resonance,

$I_r = I_L \cos\phi_L$

or $I_r = 1 \times \cos 72.542$

or $I_r = 0.3$ A

Dynamic impedance of the circuit,

$$Z_r = \frac{V}{I_r} = \frac{100}{0.3} = 333.33\ \Omega$$

Example 2.92 A circuit has $X_L = 20\ \Omega$ at 50 Hz, its resistance being 15 Ω. For an applied voltage of 200 V at 50 Hz, calculate (i) the pf, (ii) the current, (iii) the value of shunting capacitance to bring the resultant current into phase with the applied voltage, and (iv) the resultant current in case (iii).

Solution

Impedance of the circuit, $Z_L = \sqrt{(15)^2 + (20)^2}$

$= 25\ \Omega$

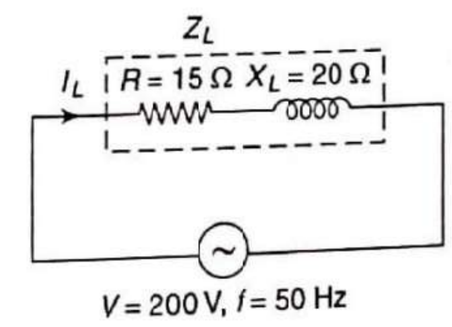

Fig. 2.169

(i) $(\text{pf})_{\text{coil}} = \cos\phi_L = \dfrac{R}{Z_L} = \dfrac{15}{25}$

$= 0.6$ lagging

So, $\phi_L = \cos^{-1} 0.6 = 53.15$

(ii) Current, $I_L = \dfrac{V}{Z_L} = \dfrac{200}{25} = 8$ A

(iii) Now, capacitance is connected in parallel with the above circuit (see Fig. 2.170).

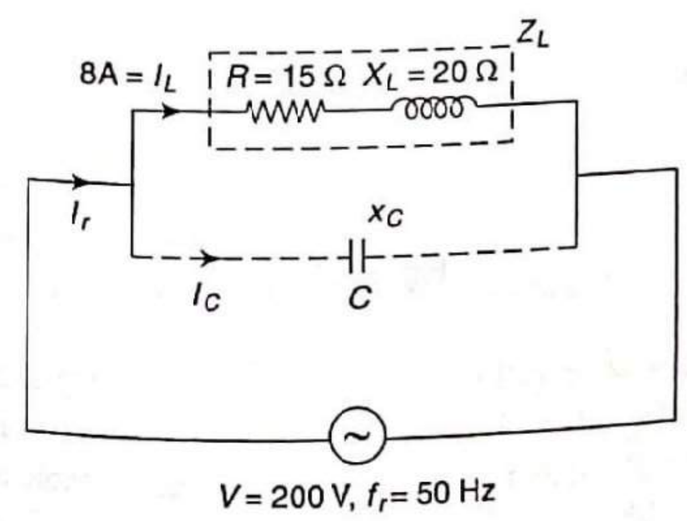

Fig. 2.170

We need a value of C, so that resulting current comes in phase with the applied voltage, i.e., pf = 1 (unity). In other words, parallel resonance occurs at $f = 50$ Hz.

At resonance,

$$I_C = I_L \sin \phi_L$$

So, $I_C = 8 \times \sin(53.13)$

or $I_C = 6.4$ A

Now, $X_C = \dfrac{V}{I_C} = \dfrac{200}{6.4} = 31.25\ \Omega$

So, $\dfrac{1}{2\pi f_r C} = 31.25$

or $\dfrac{1}{2\pi \times 50 \times C} = 31.25$

So, $C = \dfrac{1}{2\pi \times 50 \times 31.25}$

or $C = 101.859 \times 10^{-6}$ F

$= 101.859\ \mu$F

(iv) The circuit current at resonance,

$$I_r = I_L \cos \phi_L$$

or $I_r = 8 \times 0.6$

or $I_r = 4.8$ A

EXERCISES 2.3

1. For the parallel circuit shown in Fig. 2.171, find the branch currents and the total current. [*Ans.* (10∠53.13) A; (5∠0) A; (13.60∠36.03) A]

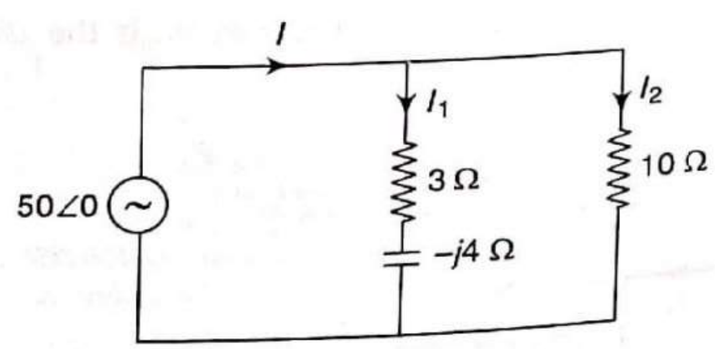

Fig. 2.171

2. Two impedances $\overline{Z}_1 = (12 + j15)\ \Omega$ and $\overline{Z}_2 = (8 - j4)\ \Omega$ are connected in parallel. If potential difference across the impedances is (230 + j0) V, calculate: (i) total current and current supplied to each branch, (ii) total power and power consumed by each branch, and (iii) overall pf and pf of each branch.

[*Ans.* (i) (30.59∠4.04) A, (11.97∠−51.34) A, (25.73∠26.57) A, (ii) 7018 W, 1719.37 W, 5296 W, (iii) 0.998 lead, 0.625 lag, 0.894 lead]

3. A circuit consisting of branches A and B are connected in parallel across 230 V, 50 Hz supply.

Branch A – A resistance of 7 Ω is in series with 0.0125 H inductor.

Branch B – A resistance of 8 Ω is in series with 1000 μF capacitor.

Find the current in each branch and total current. Draw the phasor diagram.

[*Ans.* (28.64∠−29.31) A; (26.71∠21.68) A; (50∠−4.77) A]

4. Find the reading of the ammeter, when the voltmeter across 3 Ω resistor in the circuit shown in Fig. 2.172 reads 45 V.

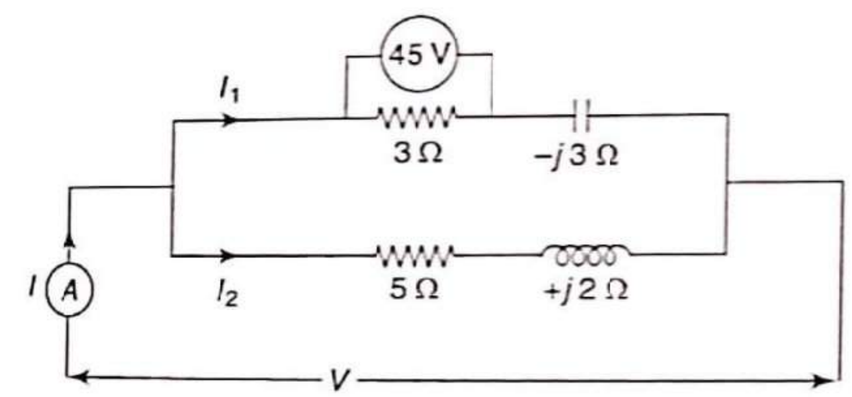

Fig. 2.172

[*Ans.* 22.43 A]

5. A single-phase circuit consists of three parallel branches, the currents in the respective branches are represented by

$$i_1 = 20 \sin 314t \text{ A},\ i_2 = 30 \sin\left(314t - \frac{\pi}{4}\right) \text{ A},\ i_3 = 18 \sin\left(314t + \frac{\pi}{4}\right) \text{ A}$$

Express the total current in the similar form, if the supply voltage is 200sin 314t V. Find impedance, resistance and reactance of the circuit.

[*Ans.* 54.6 sin (314t – 8.94); (3.66 ∠8.94) Ω; 3.62 Ω; 0.569 Ω]

6. Two impedances $\overline{Z}_1 = (10 + j5)\ \Omega$ and $\overline{Z}_2 = (25 - j10)\ \Omega$ are in parallel. If this parallel circuit is connected across 100 V, find (i) total admittance, (ii) line current, (iii) power consumed, (iv) equivalent impedance of the circuit.

[*Ans.* (0.1175∠−12.9) ℧; (11.75∠−12.9) A; 1145 W; (8.51∠12.9) Ω]

7. A series circuit having a resistance of 6 Ω and an inductive reactance of 8 Ω is connected across a 200 V, 50 Hz ac supply in parallel with another series circuit having a resistance of 8 Ω capacitive reactance of 6 Ω.

(i) Calculate the total admittance, total conductance and total susceptance of the circuit

(ii) Calculate the total current and total power factor.

(iii) Calculate the value of pure reactance to be connected in parallel with above combination to make the total pf unity.

[*Ans.* 0.14 ℧; 0.14 ℧; 0.02 ℧; (28∠−8.13) A; 0.989 lagging; X_C = 50 Ω]

8. An impedance of $(2 + j6)\ \Omega$ is connected in series with two impedances of $(10 + j4)\ \Omega$ and $(12 - j8)\ \Omega$ which are in parallel. Calculate the supply current and power factor if the circuit is connected to 200 V.

[*Ans.* $(18.74\angle{-33})$ A; 0.839 lagging]

9. A coil of 20 Ω resistance has an inductance of 0.2 H is connected in parallel with a condenser of 100 μF capacitance. Calculate the frequency at which this circuit will behave as a non-inductive resistance. Find also the value of dynamic resistance. [*Ans.* 31.83 Hz; 100 Ω]

10. An equipment consumes 2 kW when connected across a 110 V, 100 Hz supply and takes a lagging current of 25 A. If a capacitor is connected in parallel with equipment to make the PF unity, find its capacitance.

[*Ans.* 248.29 μF]

11. For the following circuit, find (i) the current delivered by the source and (ii) power factor

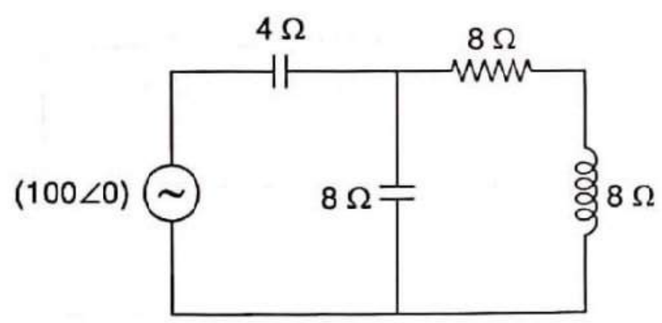

Fig. 2.173

[*Ans.* $(6.93\angle 56.31)$ A; 0.555 leading]

12. Calculate the current, power, and power factor for each impedance shown in Fig. 2.174. Also calculate the total current, power, and power factor of the whole combination.

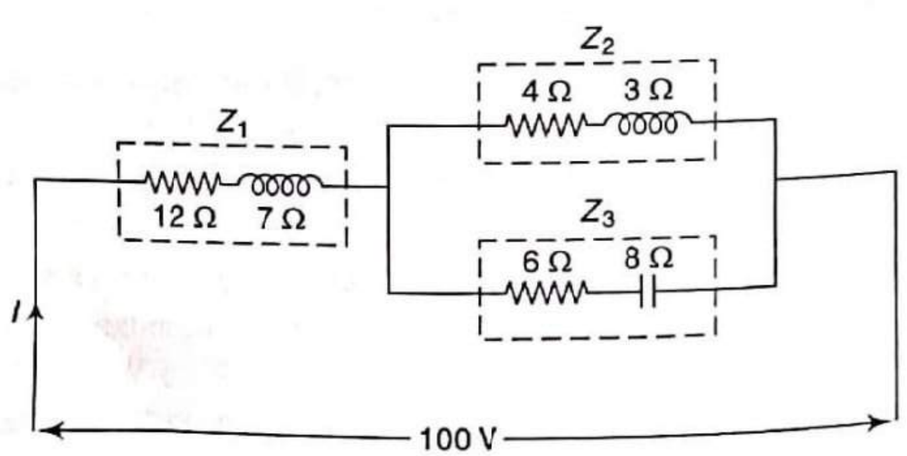

Fig. 2.174

[*Ans.* For Z_1: 5.51 A; 364.3 W; 0.864 lag;
For Z_2: 4.93 A; 97.21 W; 0.8 lag;
For Z_3: 2.46 A; 36.31 W; 0.6 lead;
For circuit: 5.51 A; 497.9 W; 0.903 lag]

13. The circuit shown in Fig. 2.175 operates at a frequency of 50 Hz. Determine the value of C such that the input voltage V and the input current I are in the same phase.

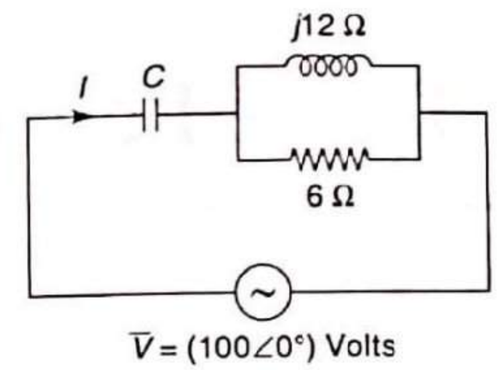

Fig. 2.175

[*Ans.* 1326.29 μF]

14. A 20 Ω resistance is connected in series with a parallel combination of a capacitance C and a 15 mH pure inductance as shown in Fig. 2.176. This circuit is connected to a voltage source of angular frequency $\omega = 1000$ rad/s. Find the value of capacitance C such that the line current is 45° out of phase with the source voltage.

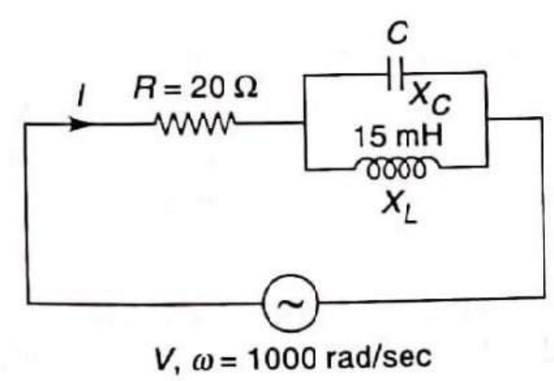

Fig. 2.176

[*Ans.* 16.67 μF]

3

Three-Phase Circuits

3.1 Introduction

We have seen that a single-phase voltage can be generated by rotating a coil (winding) in a magnetic field. Such an ac machine is called a **single-phase generator**. It has only one armature winding. But if the generator is arranged to have two or more separate windings displaced from each other by equal electrical angles, it is called polyphase generator. 'Poly' means many and 'phase' means windings, branches, or circuits.

Figure 3.1(a) shows an elementary single-phase generator. It has one winding or coil R rotating in anticlockwise direction with a constant angular velocity ω rad/sec in a uniform magnetic field. Across the winding, an alternating voltage is generated, which can be expressed by the equation

$$v_R = V_m \sin\omega t$$

Figure 3.1(b) shows an elementary two-phase generator. It has two identical windings or coils R and Y displaced by 90° from each other and rotating in anticlockwise direction with a constant angular velocity ω rad/sec in a uniform magnetic field. Here R_1, Y_1 are the start terminals and R_2, Y_2 are the finish terminals of the two coils. Since the two coils are identical and have the same angular velocity, voltages induced in them will be of same magnitude and frequency. However, these voltages will have a phase difference of 90°. The equations of the two voltages are as follows:

$$v_R = V_m \sin\omega t$$

$$v_Y = V_m \sin(\omega t - 90°)$$

Thus, a two-phase generator has two separate but identical windings that are 90° electrical apart and rotating in a uniform magnetic field. Obviously, such a generator will produce two alternating voltages of same magnitude and frequency having a phase difference of 90°. Similarly, a three-phase generator has three separate but identical windings that are 120° electrical apart and rotating in a uniform magnetic field. A three-phase generator will, therefore, produce three alternating voltages of same magnitude and frequency but displaced by 120° electrical from each other.

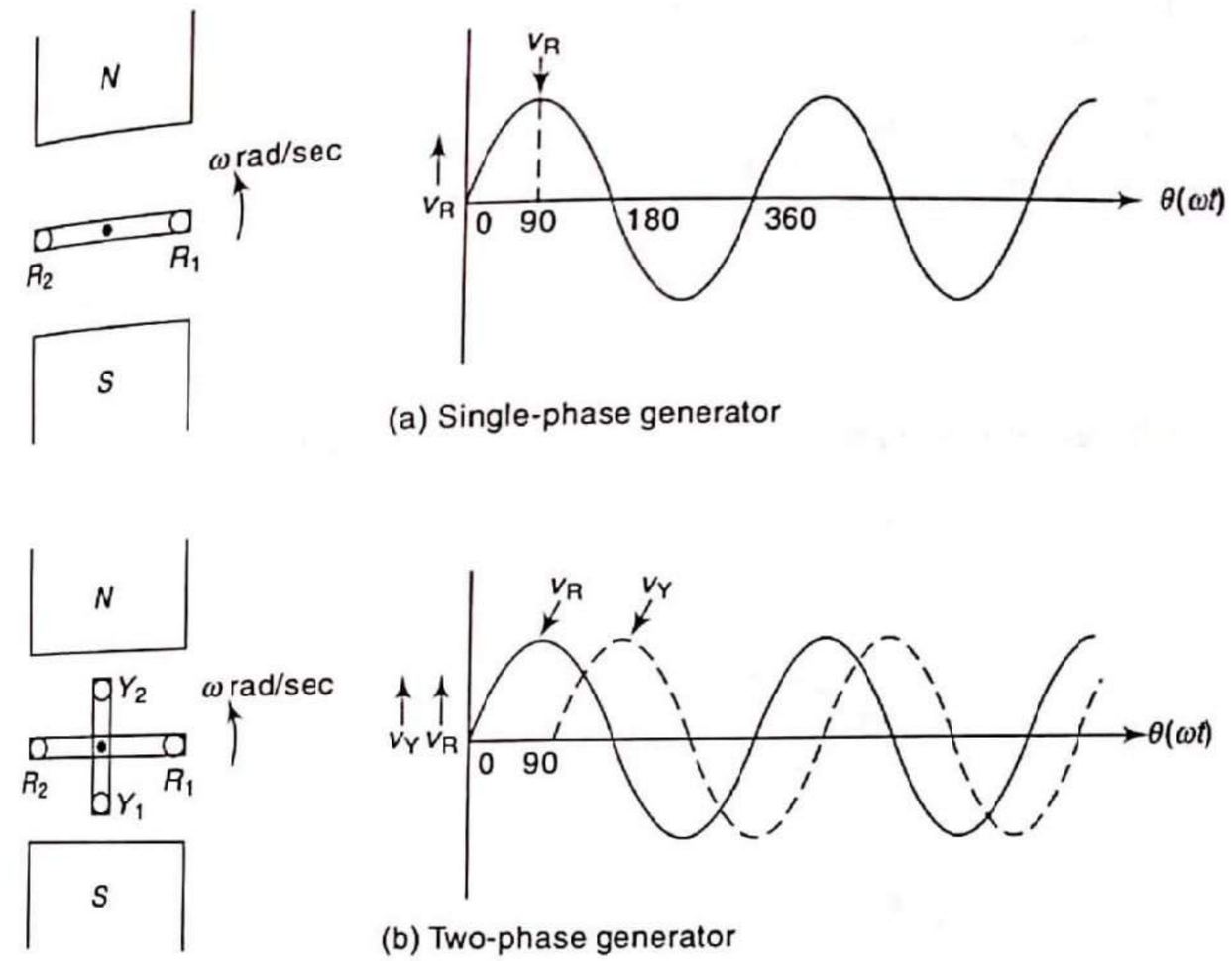

Fig. 3.1

3.2 Generation of Three-Phase Voltages

Figure 3.2(a) shows an elementary three-phase generator. It has three identical windings or coils R, Y and B displaced by 120° from each other and rotating in anticlockwise direction with a constant angular velocity ω rad/sec in a uniform magnetic field. Note that the corresponding start terminals R_1, Y_1, and B_1 are 120° apart. Likewise the finish terminals R_2, Y_2, and B_2 are 120° apart. Since the three coils are identical and have the same angular velocity, voltages induced in them will be of same magnitude and frequency. However, the three voltages will be displaced from each other by 120°. Note that the emf in coil Y lags behind that in coil R by 120° and the emf in coil B lags behind that in coil R by 240°. This is shown by the wave diagram in Fig. 3.2(b). Figure 3.2(c) shows the phasor diagram. The equations of the three voltages are as follows:

$$v_R = V_m \sin\omega t$$

$$v_Y = V_m \sin(\omega t - 120°)$$

$$v_B = V_m \sin(\omega t - 240°)$$

Resultant $= v_R + v_Y + v_B$

Putting the values, we get

$$= V_m \sin\omega t + V_m \sin(\omega t - 120°) + V_m \sin(\omega t - 240°)$$

$$= V_m [\sin\omega t + 2 \sin(\omega t - 180°) \cos 60°]$$

$$= V_m [\sin\omega t - 2 \sin\omega t \cos 60°]$$

$$= 0$$

Hence, the sum of the three voltages at every instant is zero.

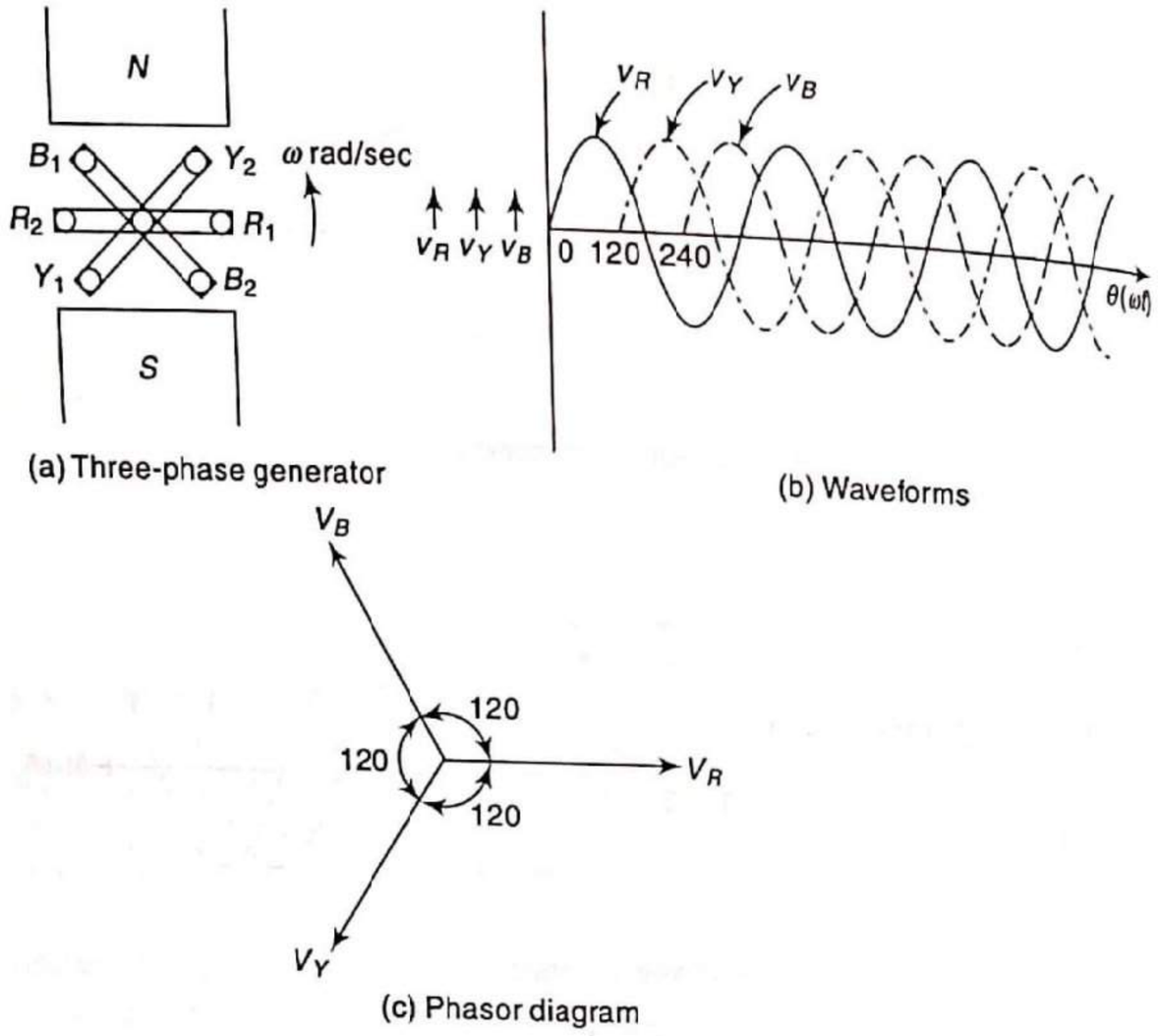

(a) Three-phase generator

(b) Waveforms

(c) Phasor diagram

Fig. 3.2

3.2.1 Advantages of Three-Phase System

In a three-phase system, the generator has three windings and it produces three independent alternating voltages. These voltages have same magnitude and frequency but have a phase difference of 120° between them. Such a three-phase system has the following advantages over a single-phase system:

1. In a single-phase system, the instantaneous power is a function of time, i.e., fluctuating and, hence, causes considerable vibrations in the single-phase motor. Hence, performance of single-phase motors is poor, while instantaneous power in symmetrical three-phase systems is constant. Also three-phase systems give steady output.
2. Power factor of single-phase motors is poor than three-phase motors of same rating.
3. The output of a three-phase machine is always greater than that of a single-phase machine of same size. So, for a given size and voltage, a three-phase generator occupies less space and has less cost than a single-phase having same rating.
4. For transmission and distribution, a three-phase system needs less copper or conducting material than a single-phase system for given volt amperes and voltage rating. So, transmission becomes very much economical in case of three-phase systems.
5. It is possible to produce rotating magnetic field with stationary coils by using a three-phase system. Hence, three-phase motors are self-starting.

6. Single-phase supply can be obtained from a three-phase system but not vice versa.
7. For converting machines such as rectifiers, the dc output voltage becomes smoother if the number of phases is increased.

It is found that the optimum number of phases required to get all the above said advantages is three. Any further increase in number of phases causes a lot of complications. Hence, three-phase system is universally accepted as standard system.

3.2.2 Some Concepts

The terms that we come across while analysing a three-phase system are briefly discussed below.

Phase sequence The order in which the voltages in the three phases reach their maximum positive value is called the phase sequence or phase order. From the waveforms of three-phase system [Fig. 3.2(b)], it is clear that the voltage in coil *R* attains maximum positive value first, next coil *Y* and then coil *B*. Hence, the phase sequence is *R-Y-B*.

Phase voltage The voltage induced in each winding is called phase voltage.

Phase current The current flowing through each winding is called phase current.

Line voltage The voltage available between any pair of terminals or lines is called line voltage.

Line current The current flowing through each line is called line current.

Balanced system A three-phase system is said to be balanced if

(a) The voltages in the three phases are equal in magnitude and differ in phase from each other by 120°.
(b) The currents in the three phases are equal in magnitude and differ in phase from each other by 120°.
(c) The loads connected across the three phases are identical i.e. all the loads have same magnitude and power factor.

Symmetrical system It is possible in a polyphase system that magnitudes of different alternating voltages are different. But a three-phase system in which the three voltages are of same magnitude and frequency and differ from each other by 120° phase angle, is defined as a symmetrical system.

3.3 Interconnection of Three Phases

A three-phase generator has three identical windings. Each winding has two terminals, viz. 'start' and 'finish'. If a separate load is connected across each winding as shown in Fig. 3.3, six conductors are required to transmit and distribute power. This will make the system complicated and expensive. In order to reduce the number of conductors, the three windings are connected in the following two ways:

1. Star or wye connection
2. Delta or mesh connection

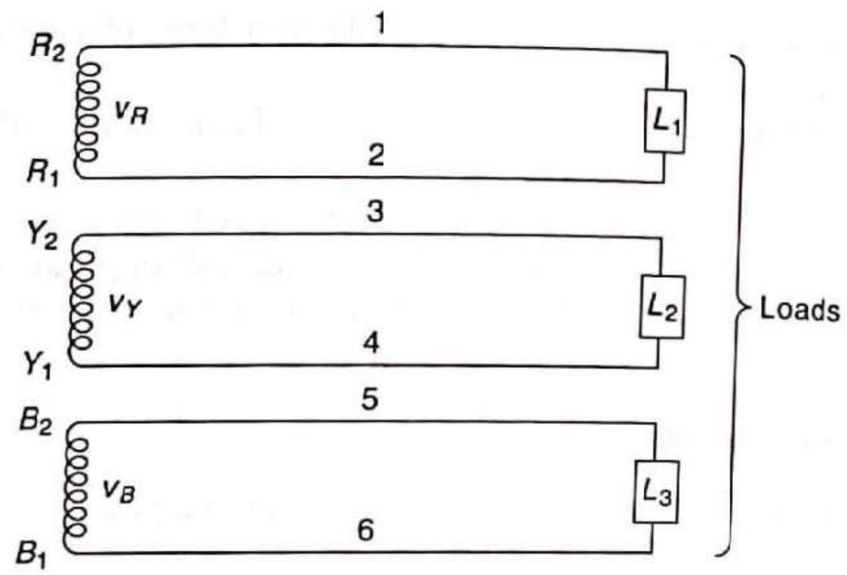

Fig. 3.3 Three-phase system with six wires used for connection

3.3.1 Star or Wye Connection

In this type of connection, similar terminals (start or finish) of the three windings are joined together as shown in Fig. 3.4. The common point is called star or neutral point. The three conductors (lines) are taken out from the three phases.

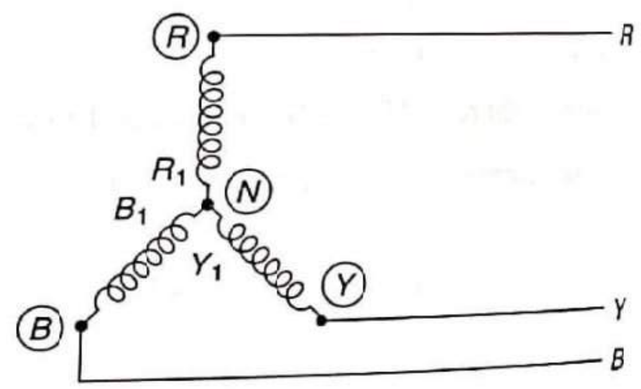

Fig. 3.4 Star-connected generator (supply)

Figure 3.5 shows a three-phase, four-wire, star-connected system. When three identical loads are connected in star, we get a three-phase, Y-connected balanced load[1]. As shown in the figure, the balanced load is connected across a supply using four wires and the current flowing through the neutral wire is the sum of the three currents I_R, I_Y, and I_B. Since the load is balanced, these currents are equal in magnitude but

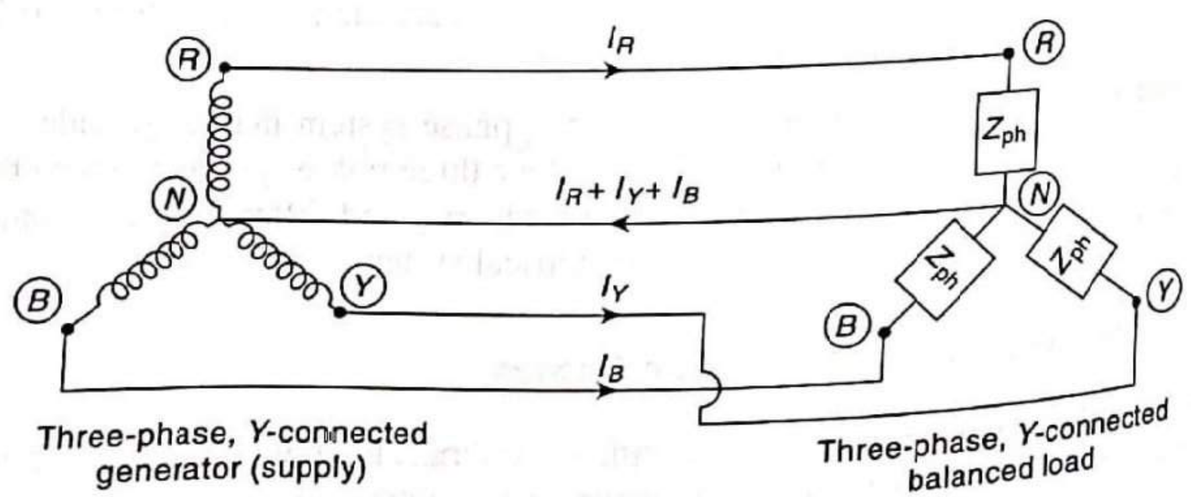

Fig. 3.5 Three-phase, four-wire, star-connected system

[1]A balanced load is a load in which magnitudes of all impedances connected to the load are equal (Z_{ph} each) and the phase angles of them are also equal and of same type (i.e., inductive, resistive, or capacitive).

differ in phase from one another by 120°. Thus, the three line currents are given as follows:

$$i_R = I_m \sin \omega t$$
$$i_Y = I_m \sin (\omega t - 120°)$$
$$i_B = I_m \sin (\omega t - 240°)$$

The current flowing through the neutral wire can be calculated as follows:

$$i_R + i_Y + i_B = I_m \sin \omega t + I_m \sin (\omega t - 120°) + I_m \sin (\omega t - 240°) = 0$$

Thus, if the load is balanced, the neutral wire carries zero current.

We can, therefore, remove the neutral wire without affecting the voltages or the currents in the circuit as shown in Fig. 3.6. This constitutes three-phase, three-wire system. If the load is not balanced, the neutral wire carries some current.

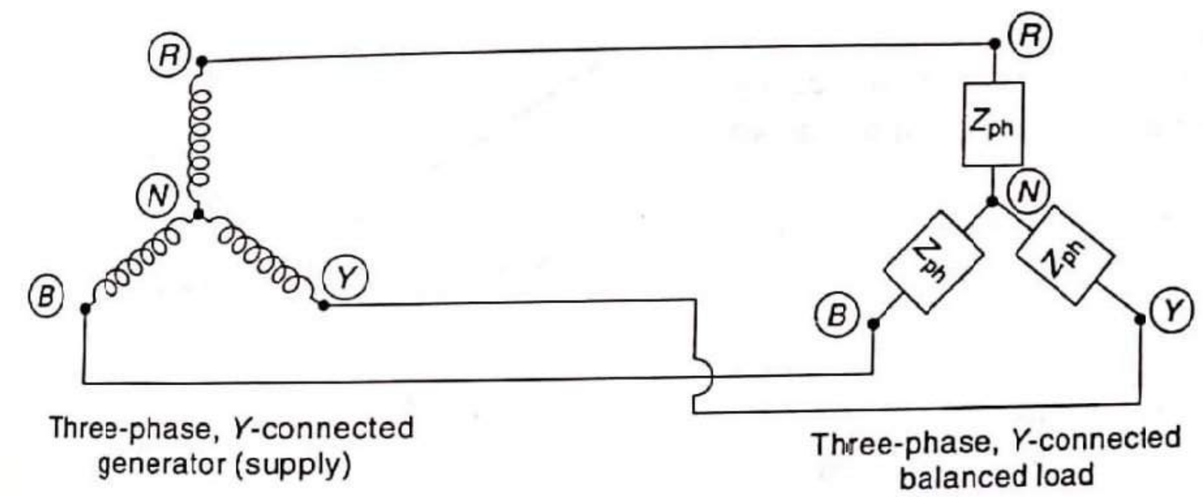

Fig. 3.6 Three-phase, three-wire, star-connected system

Relationship between line voltage and phase voltage

Figure 3.7 shows a balanced three-phase Y-connected system.

As load is balanced, all the three phase voltages V_{RN}, V_{YN} and V_{BN} are equal in magnitude and 120° apart. By phase sequence, V_{YN} lags behind that of V_{RN} by 120° and V_{BN} lags behind that of V_{RN} by 240°. The magnitude of each phase voltage is denoted by V_{ph}. Thus,

$$V_{ph} = V_{RN} = V_{YN} = V_{BN}$$

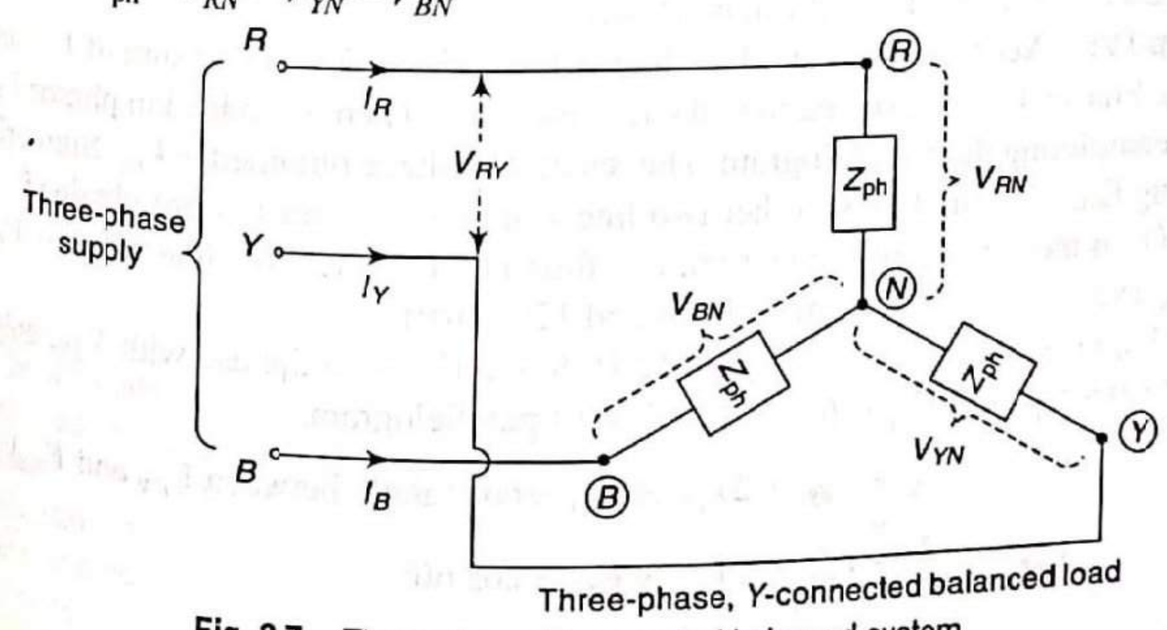

Fig. 3.7 Three-phase, Y-connected balanced system

The three line voltages are V_{RY}, V_{YB} and V_{BR}. From the circuit diagram, it is clear that line voltage is not same as phase voltage. However, for a balanced system, all three line voltages must also be equal and the magnitude of each line voltage is denoted by V_L. Thus,

$$V_L = V_{RY} = V_{YB} = V_{BR}$$

From the circuit diagram, the line voltage V_{RY} can be written in terms of the phase voltages as

$$\bar{V}_{RY} = \bar{V}_{RN} + \bar{V}_{NY} \quad (3.1)$$

Similarly, $$\bar{V}_{YB} = \bar{V}_{YN} + \bar{V}_{NB} \quad (3.2)$$

$$\bar{V}_{BR} = \bar{V}_{BN} + \bar{V}_{NR} \quad (3.3)$$

Now, magnitude of the line voltage V_{RY} in terms of the phase voltages can be calculated by using phasor diagram as shown in Fig. 3.8.

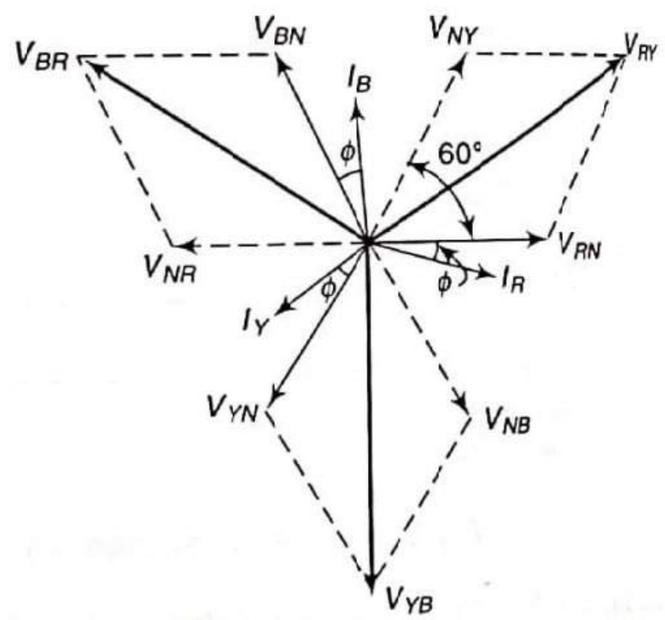

Fig. 3.8 Phasor diagram

Phasor diagram can be drawn by using the following steps:

Step I: Take the first phase voltage V_{RN} as reference and draw the three phase voltages V_{RN}, V_{YN} and V_{BN} equal in magnitude and 120° apart.

Step II: As load is balanced, all the three phase currents I_R, I_Y and I_B are equal in magnitude and 120° apart. Assuming inductive load, draw the three phase currents. All the three phase currents are equal in magnitude in current scale, each phase current lagging behind its respective phase voltage by an angle ϕ.

Step III: Line currents are the same as phase currents for star connection. Hence, separate line currents need not be shown.

Step IV: According to Eq. (3.1), line voltage V_{RY} is the phasor sum of V_{RN} and V_{NY}. Phasor V_{YN} is reversed to make it phasor V_{NY}. Then it is added in phasor V_{RN} by completing the parallelogram. The resultant voltage obtained is V_{RY}. Similarly, using Eqs (3.2) and (3.3), other two line voltages V_{YB} and V_{BR} are obtained.

From the symmetry of diagram, it is found that all the three line voltages V_{RY}, V_{YB} and V_{BR} are equal in magnitude and 120° apart.

Angle between V_{RN} and V_{YN} is 120°. Since V_{NY} is antiphase with V_{YN}, angle between V_{RN} and V_{NY} is 60°. Using law of parallelogram,

$$V_{RY}^2 = V_{RN}^2 + V_{NY}^2 + 2V_{RN} \times V_{NY} \times \cos(\text{angle between } V_{RN} \text{ and } V_{NY})$$

or $$V_{RY}^2 = V_{RN}^2 + V_{NY}^2 + 2V_{RN} \times V_{NY} \times \cos 60°$$

But V_{RY} is the line voltage and V_{RN} and V_{NY} are the phase voltages. So, we have

$$V_L^2 = V_{ph}^2 + V_{ph}^2 + 2V_{ph} \times V_{ph} \times \cos 60° = 3V_{ph}^2$$

$$V_L = \sqrt{3}\,V_{ph}$$

Hence, in a balanced three-phase star connection,

1. Line voltage, $V_L = \sqrt{3}\,V_{ph}$
2. All line voltages are equal in magnitude but 120° apart from each other
3. Line voltage leads by 30° to their respective phase voltage

Relationship between line current and phase current

In a star connection, each line conductor is connected in series to a separate phase as shown in Fig. 3.7. Therefore, current in the line conductor is same as that in the phase to which the line conductor is connected, i.e.,

Line current, $I_L = I_{ph}$

Power

In a three-phase star-connected balanced load, power consumed in each load phase is the same, as all three phases are identical. Therefore, total power in the circuit is the sum of powers in the three-phases, i.e.,

Total power, $P = 3 \times$ power in each phase

or $$P = 3 \times V_{ph} I_{ph} \cos\phi$$

or $$= 3V_{ph} I_{ph} \cos\phi \quad (3.4)$$

For a star connection, $V_L = \sqrt{3}\,V_{ph}$, $I_L = I_{ph}$

So, $$P = 3 \times \frac{V_L}{\sqrt{3}} \times I_L \cos\phi$$

$$= \sqrt{3}\,V_L I_L \cos\phi \quad (3.5)$$

Either of relations (3.4) and (3.5) can be used to determine the power. It may be noted that ϕ is the phase difference between the phase voltage and the corresponding phase current but not between the line current and the corresponding line voltage.

3.3.2 Delta Connection

In this type of connection, dissimilar terminals of the three windings are joined together, i.e., 'finish' terminal of one winding is connected to 'start' terminal of other and so on as shown in Fig. 3.9. The three line conductors are taken from the three junctions of the delta connection.

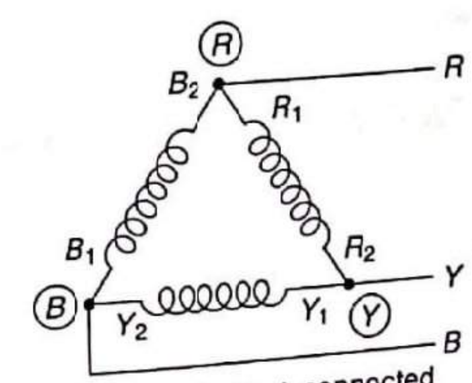

Three-phase, Δ-connected generator (supply)

Fig. 3.9

In a balanced delta-connected system, the three phase voltages are equal in magnitude and differ in phase from each other by 120°. Therefore, sum of these voltages around the closed mesh is zero.

Relationship between line voltage and phase voltage

As load is balanced, all the three-phase voltages V_{RY}, V_{YB} and V_{BR} are equal in magnitude and 120° apart.

So, $V_{ph} = V_{RY} = V_{YB} = V_{BR}$

In the delta connection, each phase is connected across a pair of line as shown in Fig. 3.10. Therefore, phase voltage is same as line voltage across which the phase is connected

or Phase voltage, $V_{ph} = V_L$

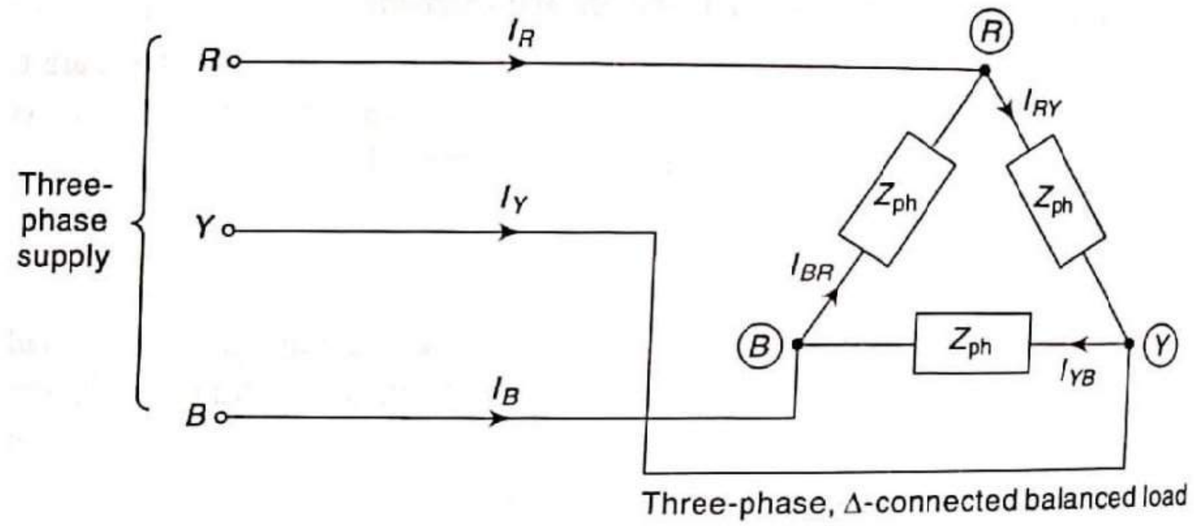

Fig. 3.10 Three-phase, Δ-connected balanced system

Relationship between line current and phase current

Figure 3.10 shows a balanced three-phase, Δ-connected system.

As load is balanced, all the three phase currents I_{RY}, I_{YB} and I_{BR} are equal in magnitude and 120° apart from each other. By phase sequence, I_{YB} lags behind I_{RY} by 120° and I_{BR} lags behind I_{RY} by 240°. The magnitude of each phase current is denoted by I_{ph}.

So, $I_{ph} = I_{RY} = I_{YB} = I_{BR}$

The three line currents are I_R, I_Y and I_B. From the circuit diagram, it is clear that line current is not same as phase current. However, for a balanced system, all the three line currents must also be equal and the magnitude of each line current is denoted by I_L.

So, $I_L = I_R = I_Y = I_B$

Consider the first line current I_R. From the circuit diagram, by applying KCL at node R, the line current I_R can be written in terms of phase currents as

$$\bar{I}_R + \bar{I}_{BR} = \bar{I}_{RY}$$
$$\bar{I}_R = \bar{I}_{RY} + (-\bar{I}_{BR}) \quad (3.6)$$

Similarly, by applying KCL at node Y,

$$\bar{I}_Y + \bar{I}_{RY} = \bar{I}_{YB}$$
$$\bar{I}_Y = \bar{I}_{YB} + (-\bar{I}_{RY}) \quad (3.7)$$

By applying KCL at node B,

$$\bar{I}_B + \bar{I}_{YB} = \bar{I}_{BR}$$
$$\bar{I}_B = \bar{I}_{BR} + (-\bar{I}_{YB}) \quad (3.8)$$

Now, magnitude of the line current I_R in terms of phase currents can be calculated by using phasor diagram as shown in Fig. 3.11.

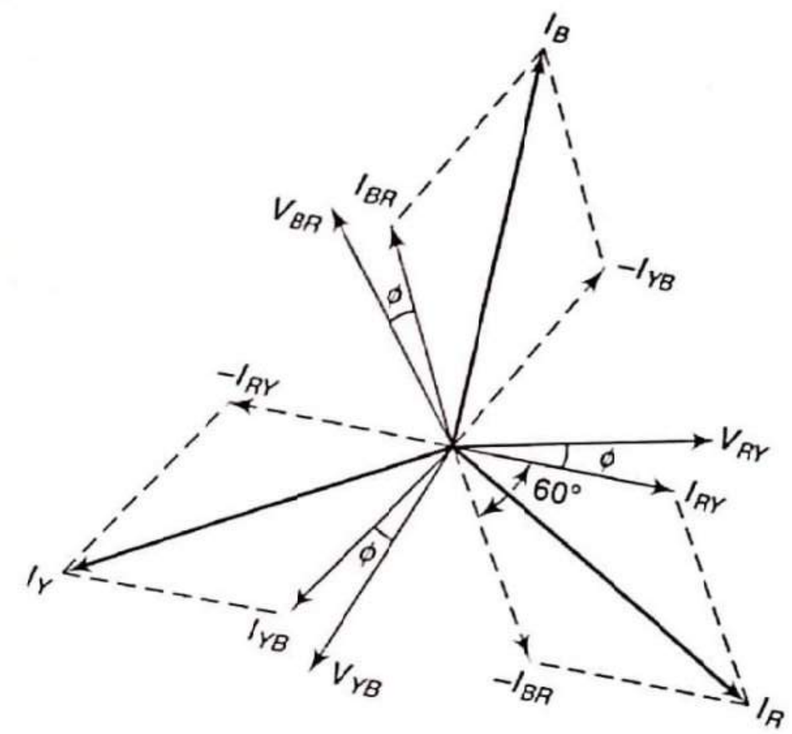

Fig. 3.11 Phasor diagram

Phasor diagram can be drawn by using the following steps:

Step I: Take the first phase voltage V_{RN} as reference and draw the three phase voltages V_{RN}, V_{YN} and V_{BN} equal in magnitude and 120° apart.

Step II: As load is balanced, all the three phase currents I_{RY}, I_{YB} and I_{BR} are equal in magnitude and 120° apart. Assuming inductive load, draw three phase currents. All the three phase currents should be equal in magnitude in current scale, each current lagging behind its respective phase voltage by an angle ϕ.

Step III: Line voltages are the same as phase voltages for delta connection. Hence, separate line voltages need not be shown.

Step IV: According to Eq. (3.6), line current I_R is the phasor sum of I_{RY} and $(-I_{BR})$. Phasor I_{BR} is reversed to make it phasor $(-I_{BR})$. Then it is added in phasor I_{RY} by completing the parallelogram. The resultant current obtained is I_R. Similarly, using Eqs (3.7) and (3.8), other two line currents I_Y and I_B are obtained.

From the symmetry of diagram, it is found that all the three line currents I_R, I_Y and I_B are equal in magnitude and 120° apart.

Angle between I_{RY} and I_{BR} is 120°. Since $(-I_{BR})$ is antiphase with I_{BR}, angle between I_{RY} and $(-I_{BR})$ is 60°. Using law of parallelogram,

$$I_R^2 = I_{RY}^2 + I_{BR}^2 + 2I_{RY} \times I_{BR} \cos [\text{angle between } I_{RY} \text{ and } (-I_{BR})]$$

where I_R is the line current and I_{RY} and I_{BR} are the phase currents.

So, $I_L^2 = I_{ph}^2 + I_{ph}^2 + 2I_{ph} \times I_{ph} \times \cos 60° = 3I_{ph}^2$

or $I_L = \sqrt{3} I_{ph}$

Hence, in a balanced three-phase delta-connection,

1. Line current, $I_L = \sqrt{3} I_{ph}$.
2. All the line currents are equal in magnitude but 120° apart from each other.
3. Line current lags behind its respective phase current by 30°.

Power

In a three-phase delta connected balanced load, as all the three phases are identical, power consumed in each load phase is the same. Therefore, total power in the circuit is the sum of powers in the three phases.

Total power, $P = 3 \times$ power in each phase

$$= 3 \times V_{ph} I_{ph} \cos \phi$$

$$= 3 V_{ph} I_{ph} \cos \phi \qquad (3.9)$$

For a delta connection, $V_L = V_{ph}$, $I_L = \sqrt{3} I_{ph}$

So, $$P = 3 \times V_L \times \frac{I_L}{\sqrt{3}} \cos \phi$$

$$= \sqrt{3} V_L I_L \cos \phi \qquad (3.10)$$

Either of relations (3.9) and (3.10) can be used to determine the power. It may be noted that ϕ is the phase difference between the phase voltage and the corresponding phase current and not between the line current and the corresponding line voltage.

3.4 Power Triangle for Three-Phase Load

In ac circuits, we have already defined the different types of power as

1. Apparent power S (volt ampere VA)
2. Active power P (Watts)
3. Reactive power Q (volt ampere reactive VAR)

All these are applicable to the three-phase circuits as follows:

1. In a three-phase balanced system (Y-connected or Δ-connected), apparent power can be calculated as

   Total apparent power, $S = 3 \times$ apparent power per phase

   $S = 3 V_{ph} I_{ph}$ VA or kVA

   $S = \sqrt{3} V_L I_L$ VA or kVA

2. In a three-phase balanced system (Y-connected or Δ-connected), active power is given as

   Total active power, $P = 3 V_{ph} I_{ph} \cos \phi$ W or kW

   $P = \sqrt{3} V_L I_L \cos \phi$ W or kW

3. In a three-phase balanced system (Y-connected or Δ-connected), reactive power is given as

   Total reactive power,

   $Q = 3 V_{ph} I_{ph} \sin \phi$ VAR or kVAR

   $Q = \sqrt{3} V_L I_L \sin \phi$ VAR or kVAR

The power triangle for a three-phase system is as shown in Fig. 3.12, which shows that

$$S = \sqrt{P^2 + Q^2}$$

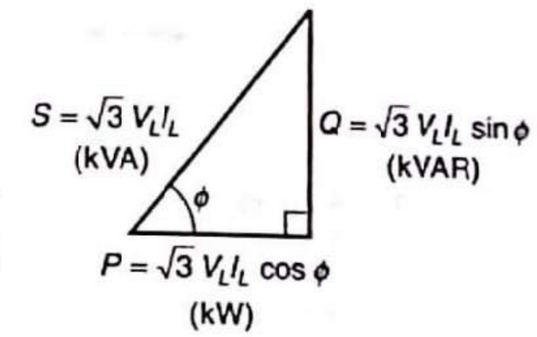

Fig. 3.12 Power triangle

3.5 Comparison between Star Connection and Delta Connection

Star connection	Delta connection
$V_L = \sqrt{3} V_{ph}$	$V_L = V_{ph}$
$I_L = I_{ph}$	$I_L = \sqrt{3} I_{ph}$
Line voltage leads the respective phase voltage by 30°.	Line current lags behind the respective phase current by 30°
Power in star connection is one-third of power in delta connection.	Power in delta connection is three times of power in star connection
Three-phase, three-wire and three-phase, four-wire systems are possible.	Only three phase-three wire system is possible
Phasor sum of all the phase currents is zero	Phasor sum of all the phase voltages is zero

Steps to be followed while solving the problem on three-phase circuits:

(i) Assume supply voltage as line voltage.

(ii) Indentify the type of load, i.e., whether star or delta connected and determine the phase voltage.

(iii) Determine the phase current as, $I_{ph} = \frac{V_{ph}}{Z_{ph}}$.

(iv) Determine the line current depending on whether the load is star or delta connected.

(v) The phase angle, ϕ is the angle between V_{ph} and I_{ph}. Calculate its value from Z_{ph}.

Example 3.1 Three similar coils, each of resistance 20 Ω and inductance 0.5 H, are connected in (a) the star, (b) the delta to a three-phase 50 Hz, 400 V supply. Calculate the line current and the total power absorbed.

Solution

(a) *Star connection:*

When three similar coils are connected in star, we get a three-phase, Y-connected balanced load as shown in Fig. 3.13.

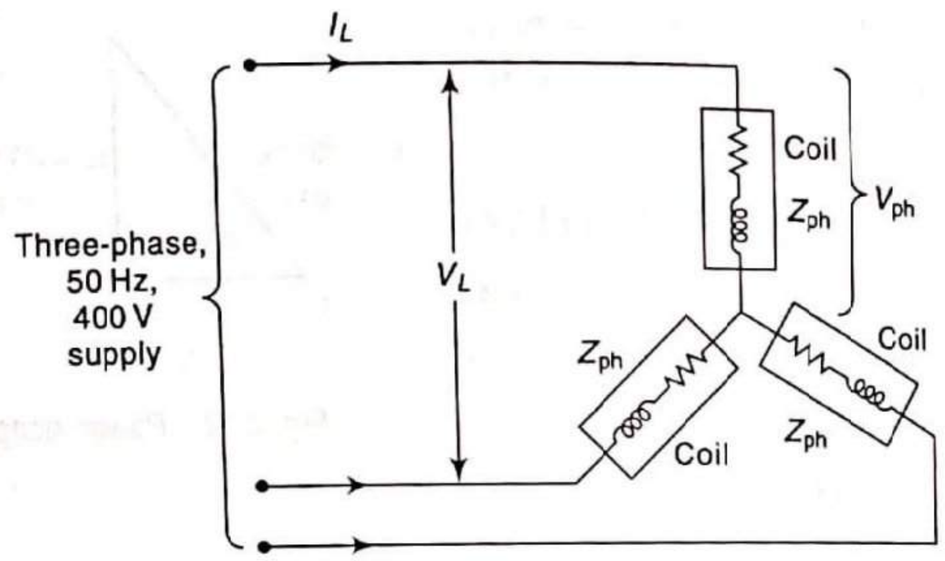

Three-phase, Y-connected balanced load

Fig. 3.13

Let the impedance of each coil is Z_{ph}.

Z_{ph} can be calculated as follows:

Resistance of each coil, $R_{ph} = 20\ \Omega$

Inductance of each coil, $L = 0.5$ H

Reactance of each coil, $X_L = 2\pi fL = 2\pi \times 50 \times 0.5 = 157\ \Omega$

So, Rectangular form of Z_{ph}, $\bar{Z}_{ph} = (20 + j157)\ \Omega$

and Polar form of Z_{ph}, $\bar{Z}_{ph} = (158.27\angle 82.74)\ \Omega$

From polar form, $Z_{ph} = 158.27\ \Omega$ and $\phi = 82.74°$

Phase voltage, $V_{ph} = \dfrac{V_L}{\sqrt{3}} = \dfrac{400}{\sqrt{3}} = 230.94$ V

Phase current, $I_{ph} = \dfrac{V_{ph}}{Z_{ph}} = \dfrac{230.94}{158.27} = 1.46$ A

In Y-connection, $I_L = I_{ph}$

So, $I_L = 1.46$ A

Total power absorbed, $P = \sqrt{3} V_L I_L \cos\phi$

$= \sqrt{3} \times 400 \times 1.46 \times \cos 82.74°$

$= 127.83$ W

(b) *Delta connection:*

When three similar coils are connected in delta, we get three phase, delta-connected balanced load as shown in Fig. 3.14.

As the same three coils are connected in delta, Z_{ph} is same.

So, $\bar{Z}_{ph} = (158.27\angle 82.74)\ \Omega$

In delta-connection, $V_L = V_{ph} = 400$ V

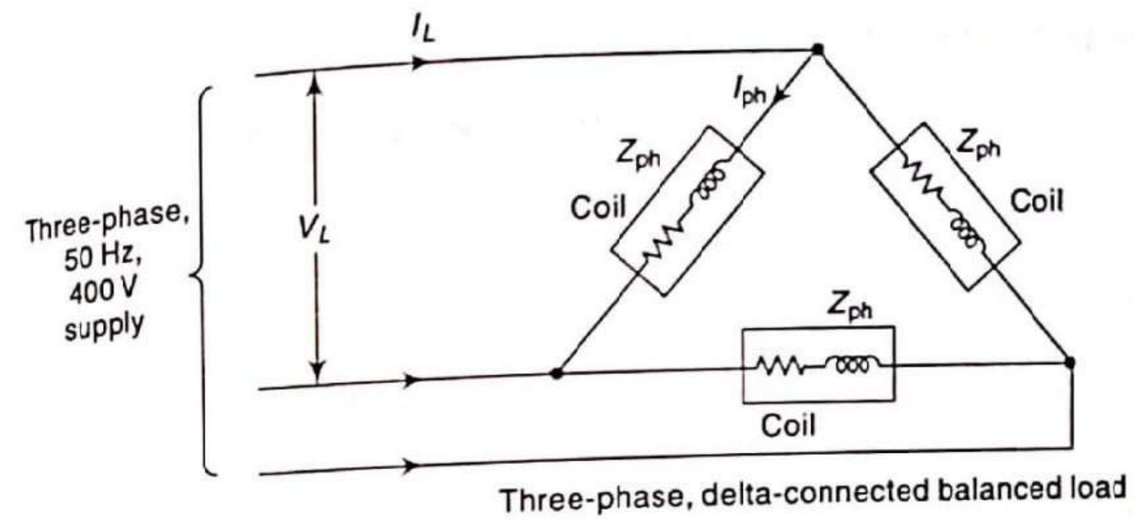

Three-phase, delta-connected balanced load

Fig. 3.14

Phase current, $I_{ph} = \dfrac{V_{ph}}{Z_{ph}} = \dfrac{400}{158.27} = 2.53$ A

Line current, $I_L = \sqrt{3} I_{ph} = \sqrt{3} \times 2.53 = 4.38$ A

Total power absorbed, $P = \sqrt{3} V_L I_L \cos\phi$

So, $P = \sqrt{3} \times 400 \times 4.38 \times \cos 82.74°$

or $P = 383.48$ W

Example 3.2 Three similar coils, each of resistance 8 Ω, and inductance 0.02 H, are connected in star across a three-phase 50 Hz, 230 V supply. Calculate the line current, total power absorbed, reactive volt amperes, and total volt amperes.

Solution

We have $R_{ph} = 8\ \Omega$

$L = 0.02$ H

So, $X_L = 2\pi fL = 2\pi \times 50 \times 0.02 = 6.28\ \Omega$

$V_L = 230$ V

$f = 50$ Hz

For star-connected load,

$$V_{ph} = \frac{V_L}{\sqrt{3}} = \frac{230}{\sqrt{3}} = 132.79 \text{ V}$$

So, $\bar{Z}_{ph} = (8 + j6.28)\ \Omega = (10.17\angle 38.13)\ \Omega$

$Z_{ph} = 10.17\ \Omega$ and $\phi = 38.13$

Phase current, $I_{ph} = \dfrac{V_{ph}}{Z_{ph}} = \dfrac{132.79}{10.17} = 13.06$ A

Line current, $I_L = I_{ph} = 13.06$ A

Total power absorbed, $P = \sqrt{3} V_L I_L \cos \phi$

$$= \sqrt{3} \times 230 \times 13.06 \times \cos 38.13°$$
$$= 4092 \text{ W}$$
$$= 4.092 \text{ kW}$$

Reactive volt ampere, $Q = \sqrt{3} V_L I_L \sin \phi$

$$= \sqrt{3} \times 230 \times 13.06 \times \sin 38.13°$$
$$= 3.21 \text{ kVAR}$$

Total volt ampere, $S = \sqrt{3} V_L I_L$

$$= \sqrt{3} \times 230 \times 13.06$$
$$= 5.2 \text{ kVA}$$

Example 3.3 Three identical coils, each having resistance of 15 Ω and inductance of 0.03 H, are connected in delta across a three-phase 50 Hz, 230 V supply. Calculate the phase current, line current, and total power absorbed. Draw phasor diagram.

Solution

We have $R_{ph} = 15\ \Omega$

$L = 0.03$ H, $X_L = 2\pi f L = 2\pi \times 50 \times 0.03 = 9.42\ \Omega$

So, impedance of each coil, $\bar{Z}_{ph} = (15 + j\,9.42)\ \Omega = (17.71\angle 32.13)\ \Omega$

From polar form, $Z_{ph} = 17.71\ \Omega$ and $\phi = 32.13$

For delta-connected load, $V_L = V_{ph} = 230$ V

Phase current, $I_{ph} = \dfrac{V_{ph}}{Z_{ph}} = \dfrac{230}{17.71} = 12.99$ A

Line current, $I_L = \sqrt{3} I_{ph} = \sqrt{3} \times 12.99 = 22.5$ A

Total power absorbed,

$$P = \sqrt{3} V_L I_L \cos \phi$$
$$= \sqrt{3} \times 230 \times 22.5 \times \cos 32.13°$$
$$= 7.59 \text{ kW}$$

Phasor diagram

$V_{ph} = 230$ V

$I_{ph} = 12.99$ A

$\phi = 32.13°$

$I_L = 22.5$ A

Scale:

For voltage, 100 V = 1 cm

For current, 5 A = 1 cm

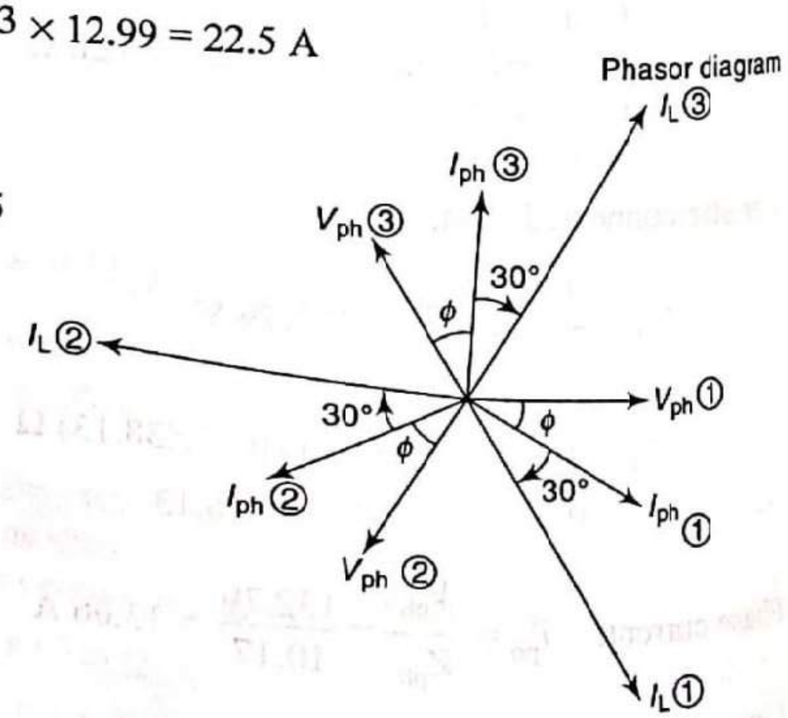

Fig. 3.15

Steps for drawing phasor diagram:

1. First draw the three phase voltages. Take the first phase voltage, i.e., $V_{ph}(1)$ as reference. All the three phase voltages are equal in magnitude and 120° apart.
2. As the load is inductive, the phase current lags behind the respective phase voltage by $\phi°$. All the phase currents are equal in magnitude. Thus, draw the three phase currents.
3. Line voltages are same as phase voltages for delta connection. Hence, separate line voltages need not be shown.
4. In delta connections, the line current lags behind the respective phase current by 30° [for example, $I_L(1)$ lags behind $I_{ph}(1)$ by 30° and so on). Thus, draw all the three line currents. All the line currents are equal in magnitude.

Example 3.4 A balanced delta-connected load has impedance of (14.151 – j200) Ω, in each branch. Determine branch current, line current, total power taken if balanced 3-ϕ, 400 V, 50 Hz supply is used. How much power is consumed in each branch of delta? Find also reactive element in suitable unit.

Solution

For delta connection, $V_{ph} = V_L = 400$ V

The impedance in each branch (phase), $\bar{Z}_{ph} = (14.151 - j200)\ \Omega$

So, $\bar{Z}_{ph} = (200.5\angle -85.95)\ \Omega$.

From polar form, $Z_{ph} = 200.5\ \Omega$ and $\phi = -85.95$

Phase current, $I_{ph} = \dfrac{V_{ph}}{Z_{ph}} = \dfrac{400}{200.5} = 1.995$ A

Line current, $I_L = \sqrt{3} I_{ph} = \sqrt{3} \times 1.995 = 3.455$ A

Total power, $P = \sqrt{3} V_L I_L \cos \phi = \sqrt{3} \times 400 \times 3.455 \times \cos(-85.95) = 169$ W

Power in each branch (phase) of delta connection $= V_{ph} I_{ph} \cos \phi$

$$= 400 \times 1.995 \times \cos(-85.95)$$
$$= 56.36 \text{ W}$$

Rectangular form of Z_{ph} indicates that it is capacitive impedance. (imaginary part of $\bar{Z}_{ph}$ is negative).

Capacitive reactance, $X_C = \dfrac{1}{2\pi f C}$

or $200 = \dfrac{1}{2\pi \times 50 \times C}$

So, $C = 15.91 \times 10^{-6}$ F

$= 15.91\ \mu$F

Example 3.5 Each phase of delta-connected load consists of a 50 mH inductor in series with a parallel combination of 50 Ω resistor and 50 μF capacitor. The load is connected to a three-phase, 550 V, 800 rad/sec ac supply. Find (i) phase current, (ii) line current, (iii) power drawn, (iv) power factor, (v) reactive power, and (vi) kVA rating of the load.

Solution

Delta-connected load is connected to the three-phase, 550 V, 800 rad/sec ac supply as shown in Fig. 3.16.

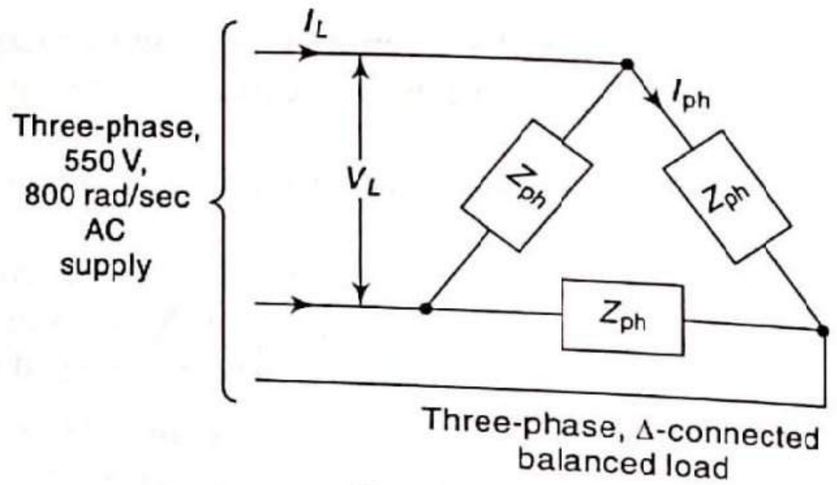

Fig. 3.16

Each phase of delta-connected load consists of a 50 mH inductor in series with a parallel combination of 50 Ω resistor and 50 μF capacitor (as shown in Fig. 3.17).

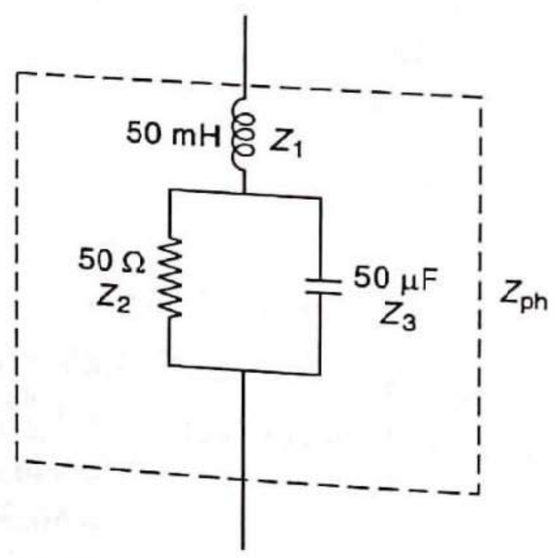

Fig. 3.17

Let the phase impedance be Z_{ph}.

$$L = 50 \text{ mH}\,;\ X_L = \omega L = 800 \times 50 \times 10^{-3} = 40\ \Omega$$

$$C = 50\ \mu\text{F}\,;\ X_C = \frac{1}{\omega C} = \frac{1}{800 \times 50 \times 10^{-6}} = 25\ \Omega$$

So,
$$\bar{Z}_1 = (0 + j40)\ \Omega = (40\angle 90)\ \Omega$$
$$\bar{Z}_2 = (50 + j0)\ \Omega = (50\angle 0)\ \Omega$$
$$\bar{Z}_3 = (0 - j25)\ \Omega = (25\angle -90)\ \Omega$$

Now, Z_{ph} can be calculated as

$$\bar{Z}_{ph} = \bar{Z}_1 + \frac{\bar{Z}_2 \bar{Z}_3}{\bar{Z}_2 + \bar{Z}_3}$$

$$= (0 + j40) + \frac{(50\angle 0)(25\angle -90)}{(50 + j0) + (0 - j25)}$$

$$= (0 + j40) + \frac{(1250\angle -90)}{(50 - j25)}$$

$$= (0 + j40) + \frac{(1250\angle -90)}{(55.9\ \angle -26.56)}$$

$$= (0 + j40) + (22.36\angle -63.44)$$
$$= (0 + j40) + (10 - j20)\ \Omega$$

or $\quad \bar{Z}_{ph} = (10 + j20)\ \Omega$

or $\quad \bar{Z}_{ph} = (22.36\angle 63.43)\ \Omega$

From polar form, $Z_{ph} = 22.36\ \Omega$ and $\phi = 63.43$

For delta connection, $V_L = V_{ph} = 550$ V

Phase current, $I_{ph} = \dfrac{V_{ph}}{Z_{ph}} = \dfrac{550}{22.36} = 24.597$ A

Line current, $I_L = \sqrt{3} I_{ph} = \sqrt{3} \times 24.597 = 42.6$ A

Power drawn, $P = \sqrt{3} V_L I_L \cos\phi = \sqrt{3} \times 550 \times 42.6 \times \cos 63.43° = 18.152$ kW

Power factor $= \cos 63.43° = 0.447$ lagging

Reactive power, $Q = \sqrt{3} V_L I_L \sin\phi = \sqrt{3} \times 550 \times 42.6 \times \sin 63.43° = 36.3$ kVAR

kVA rating of the load, $S = \sqrt{3} V_L I_L = \sqrt{3} \times 550 \times 42.6 = 40.58$ kVA

Example 3.6 Three similar coils are connected in star to a three-phase supply. If the line current is 15 A, total power consumed is 11 kW and volt-ampere input is 15 kVA. Find the line voltage, phase voltage, reactance and resistance of each coil. If these coils are now connected in delta, calculate phase and line currents and active and reactive power.

Solution

Case (i) Three similar coils are connected in star to a three-phase supply as shown in Fig. 3.18.

Given: $I_L = 15$ A

$P = 11$ kW

Volt-ampere input, i.e., apparent power, $S = 15$ kVA

For star connection,

$$S = \sqrt{3} V_L I_L$$

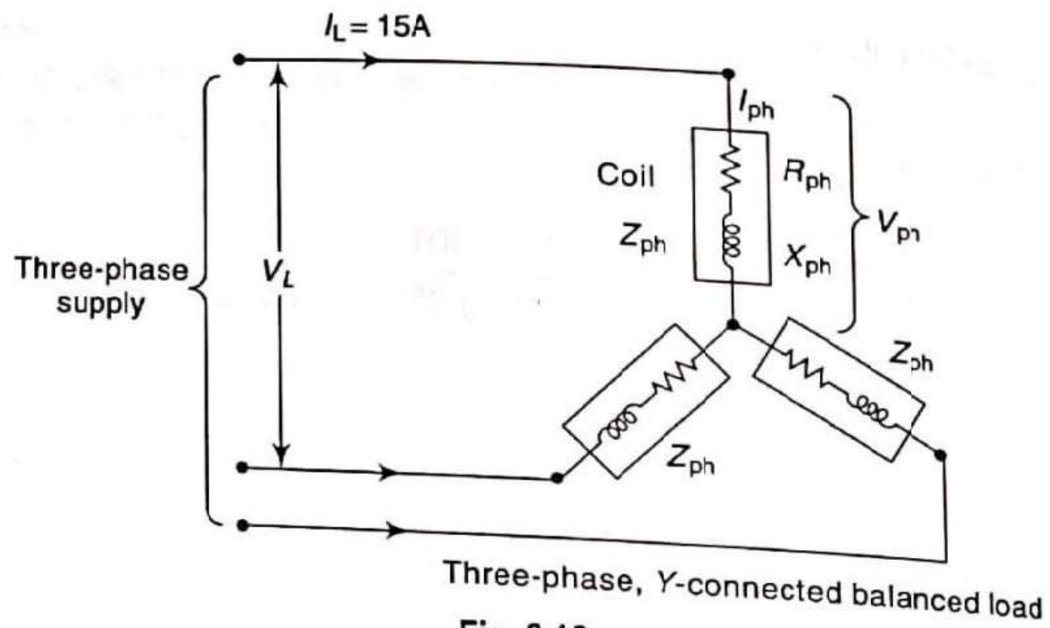

Fig. 3.18

or $\quad 15 \times 10^3 = \sqrt{3} \times V_L \times 15$

or $\quad V_L = 577.35$ V

So, $\quad V_{ph} = \dfrac{V_L}{\sqrt{3}} = \dfrac{577.35}{\sqrt{3}} = 333.33$ V

By Ohm's law,

$$Z_{ph} = \frac{V_{ph}}{I_{ph}} = \frac{333.33}{15} = 22.22\ \Omega$$

Phase angle (ϕ) of Z_{ph} can be calculated as

$$P = \sqrt{3} V_L I_L \cos\phi$$

or $\quad 11 \times 10^3 = \sqrt{3} \times 577.35 \times 15 \times \cos\phi$

So, $\quad \phi = 42.83$

Now, phase impedance (Z_{ph}) can be expressed in polar form as

$$\bar{Z}_{ph} = (22.22\angle 42.83)\ \Omega$$

Taking rectangular form,

$$\bar{Z}_{ph} = (16.3 + j15.11)\ \Omega$$

From rectangular form,

Resistance of each coil, $R_{ph} = 16.3\ \Omega$

Reactance of each coil, $X_{ph} = 15.11\ \Omega$

Case (ii) If these coils are now connected in delta (supply remains same), then

$$V_{ph} = V_L = 577.35 \text{ V}$$

As coils remain same, $\bar{Z}_{ph} = (22.22\angle 42.83)\ \Omega$

Phase current, $I_{ph} = \dfrac{V_{ph}}{Z_{ph}} = \dfrac{577.35}{22.22} = 25.98$ A

Line current, $I_L = \sqrt{3} I_{ph} = \sqrt{3} \times 25.98 = 45$ A

Active power, $P = \sqrt{3} V_L I_L \cos\phi$

$= \sqrt{3} \times 577.35 \times 45 \times \cos 42.83°$

$= 33$ kW

Reactive power, $Q = \sqrt{3} V_L I_L \sin\phi$

$= \sqrt{3} \times 577.35 \times 45 \times \sin 42.83°$

$= 30.59$ kVAR

Example 3.7 A balanced three-phase load connected in delta, draws a power of 10 kW at 440 V at a power factor of 0.6 lead, find the values of circuit elements and reactive volt-amperes drawn.

Solution

Given:

$P = 10$ kW, $V_L = 440$ V,

pf = 0.6 lead, i.e., load is capacitive.

For delta connection, $V_L = V_{ph} = 440$ V

Now, $\quad P = \sqrt{3} \times V_L I_L \cos\phi$

or $\quad 10 \times 10^3 = \sqrt{3} \times 440 \times I_L \times 0.6$

So, $\quad I_L = 21.87$ A

Phase current, $I_{ph} = \dfrac{I_L}{\sqrt{3}} = \dfrac{21.87}{\sqrt{3}} = 12.63$ A

By Ohm's law,

$$Z_{ph} = \frac{V_{ph}}{I_{ph}} = \frac{440}{12.63} = 34.84\ \Omega$$

Phase angle (ϕ) of Z_{ph} can be calculated as

pf = $\cos\phi$ lead

or $\quad 0.6 = \cos\phi$ lead

So, $\quad \phi = -53.13$ (as PF is leading, phase angle is –ve.)

Now, phase impedance can be expressed in polar form as

$$\bar{Z}_{ph} = (34.84\angle -53.13)\ \Omega$$

Taking rectangular form,

$$\bar{Z}_{ph} = (20.9 - j27.87)$$

From rectangular form of Z_{ph}, circuit elements are:

$R = 20.9\ \Omega$

$X_C = 27.87\ \Omega$

Reactive volt-ampere drawn, $Q = \sqrt{3} V_L I_L \sin \phi$

$$Q = \sqrt{3} \times 440 \times 21.87 \times \sin(-53.13)$$
$$Q = -13.33 \text{ kVAR}$$

Example 3.8 Three similar coils connected in star, take a power of 1.5 kW at a power factor of 0.2 lagging from a three-phase, 440 V, 50 Hz supply. Calculate resistance and inductance of each coil.

Solution

When three similar coils are connected in star, we get the three-phase, *Y*-connected balanced load as shown in Fig. 3.19.

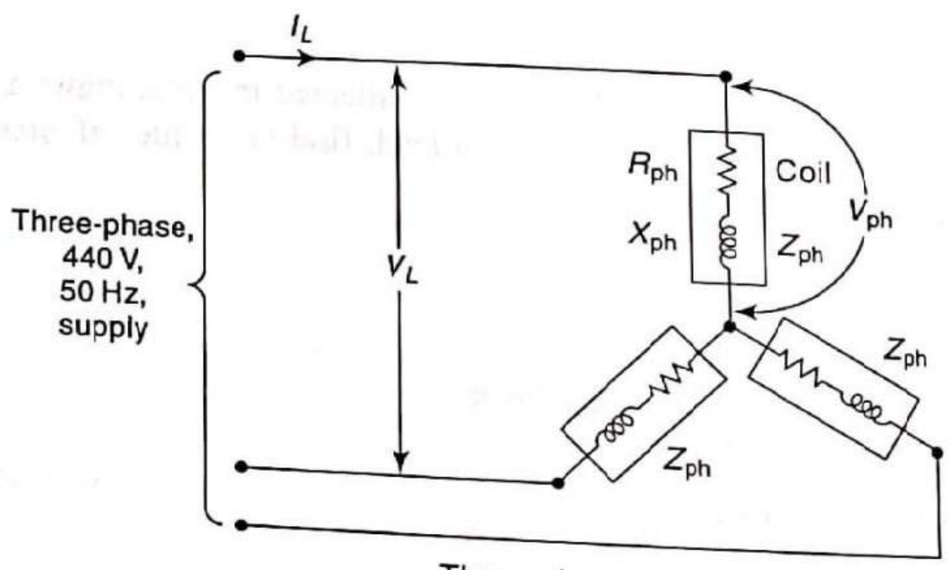

Three-phase, *Y*-connected balanced load

Fig. 3.19

Phase voltage, $V_{ph} = \dfrac{V_L}{\sqrt{3}} = \dfrac{440}{\sqrt{3}} = 254.03$ V

Now, $P = \sqrt{3} V_L I_L \cos \phi$

or $1.5 \times 10^3 = \sqrt{3} \times 440 \times I_L \times 0.2$

So, $I_L = 9.84$ A

In a star connection, $I_{ph} = I_L = 9.84$ A

By Ohm's law,

$$Z_{ph} = \frac{V_{ph}}{I_{ph}} = \frac{254.03}{9.84} = 25.82\ \Omega$$

Phase angle of Z_{ph}, $\phi = \cos^{-1} 0.2$ (Since pf = cos ϕ = 0.2 lagging)

So, $\phi = 78.46$

Now, polar form of phase impedance, $\bar{Z}_{ph} = (25.82\angle 78.46)\ \Omega$

Rectangular form of phase impedance, $\bar{Z}_{ph} = (5.17 + j25.3)\ \Omega$

From rectangular form of Z_{ph},

Resistance of each phase (coil), $R = 5.17\ \Omega$

Inductive reactance of each coil, $X_L = 25.3\ \Omega$

As $X_L = 25.3\ \Omega$, we get

$$2\pi f L = 25.3$$

or $2\pi \times 50 \times L = 25.3$

or $L = 0.08$ H

So, inductance of each coil, $L = 0.08$ H

Example 3.9 A balanced three-phase star connected load of 100 kW takes a leading current of 80 A, when connected across a three-phase, 1100 V, 50 Hz supply. Find the circuit constants of the load per phase.

Solution

We have $P = 100$ kW

$I_L = 80$ A

$V_L = 1100$ V

$f = 50$ Hz

For star connection, phase voltage, $V_{ph} = \dfrac{V_L}{\sqrt{3}} = \dfrac{1100}{\sqrt{3}} = 635.08$ V

Phase current, $I_{ph} = I_L = 80$A

By Ohm's law, $Z_{ph} = \dfrac{V_{ph}}{I_{ph}} = \dfrac{635.08}{80} = 7.94\ \Omega$

Phase angle of Z_{ph} can be calculated as

$$P = \sqrt{3} V_L I_L \cos \phi$$

or $100 \times 10^3 = \sqrt{3} \times 1100 \times 80 \times \cos \phi$

or $\phi = 49$

As load draws a leading current, its nature is capacitive, i.e., phase angle is negative.

So, $\bar{Z}_{ph} = (7.94\angle -49)\ \Omega$

Taking rectangular form, $\bar{Z}_{ph} = (5.21 - j6)\ \Omega$

Circuit constants are $R = 5.21\ \Omega$ and $X_C = 6\ \Omega$

As $X_C = \dfrac{1}{2\pi fC}$,

$$6 = \frac{1}{2\pi \times 50 \times C}$$

or $C = 530.52\ \mu$F

Example 3.10 Three identical impedances are connected in delta to a three-phase supply of 400 V. The line current is 34.65 A and the total power drawn from the supply is 14.4 kW. Calculate the resistance and reactance values of each impedance.

Solution

We have $V_L = 400$ V, $I_L = 34.65$ A, Power, $P = 14.4$ kW

For delta-connected load,

$$V_L = V_{ph} = 400 \text{ V}$$

So, $$I_{ph} = \frac{I_L}{\sqrt{3}} = \frac{34.65}{\sqrt{3}} = 20 \text{ A}$$

and $$Z_{ph} = \frac{V_{ph}}{I_{ph}} = \frac{400}{20} = 20\ \Omega$$

Now, $P = \sqrt{3} V_L I_L \cos\phi$

So, $14.4 \times 10^3 = \sqrt{3} \times 400 \times 34.65 \times \cos\phi$

or $\phi = 53.14$

Polar form of impedance, $\overline{Z}_{ph} = (20\angle 53.14)\ \Omega$

Total rectangular form, $\overline{Z}_{ph} = (12 + j16)\ \Omega$

Thus, resistance of each impedance, $R = 12\ \Omega$

and reactance of each impedance, $X_L = 16\ \Omega$

Example 3.11 A 415 V, 50 Hz, three-phase voltage is applied to a three star-connected identical impedances. Each impedance consists of a resistance of 15 Ω, capacitances of 177 μF and inductance of 0.1 H in series. Find (i) Phase current, (ii) line current, (iii) power drawn, (iv) power factor, (v) reactive power, and (vi) total kVA. Draw a neat phasor diagram showing all phasors.

Solution

The 415 V, 50 Hz, three-phase voltage is applied to three star-connected identical impedances as shown in Fig. 3.20.

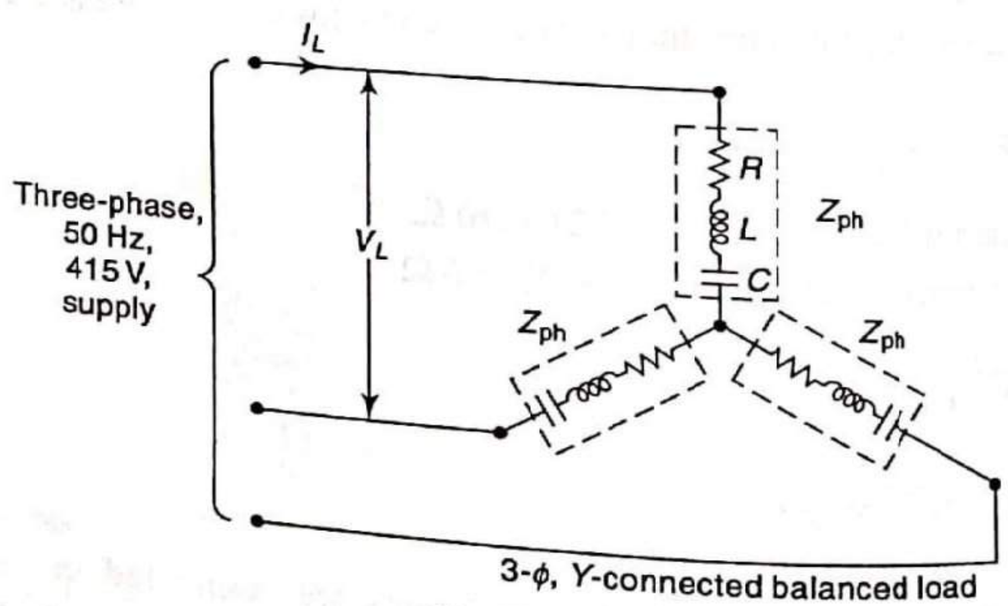

Fig. 3.20

Given: $V_L = 415$ V, $R = 15\ \Omega$, $L = 0.1$ H, $C = 177\ \mu$F, $f = 50$ Hz

For star-connected load,

$$V_{ph} = \frac{V_L}{\sqrt{3}} = \frac{415}{\sqrt{3}} = 239.6 \text{ V}$$

$$X_L = 2\pi f L = 2\pi \times 50 \times 0.1 = 31.42\ \Omega$$

$$X_C = \frac{1}{2\pi f C} = \frac{1}{2\pi \times 50 \times 177 \times 10^{-6}} = 17.98\ \Omega$$

So, $Z_{ph} = [R + j(X_L - X_C)] = (15 + j13.44)\ \Omega = (20.14\angle 41.86)\ \Omega$

Thus, $Z_{ph} = 20.14\ \Omega$ and $\phi = 41.86$

Phase current, $$I_{ph} = \frac{V_{ph}}{Z_{ph}} = \frac{239.6}{20.14} = 11.9 \text{ A}$$

Line current, $I_L = I_{ph} = 11.9$ A

Power, $P = \sqrt{3} V_L I_L \cos\phi$

$= \sqrt{3} \times 415 \times 11.9 \times \cos 41.86$

$= 6.37$ kW

Reactive power, $Q = \sqrt{3} V_L I_L \sin\phi$

$= \sqrt{3} \times 415 \times 11.9 \times \sin 41.86°$

$= 5.71$ kVAR

Apparent power, $S = \sqrt{3} V_L I_L = \sqrt{3} \times 415 \times 11.9 = 8.55$ kVA

Phasor diagram

$V_{ph} = 239.6$ V, $I_{ph} = 11.9$ A, $V_L = 415$ V, $\phi = 41.86$

Scale: For voltage 100 V = 1 cm

For current 3 A = 1 cm

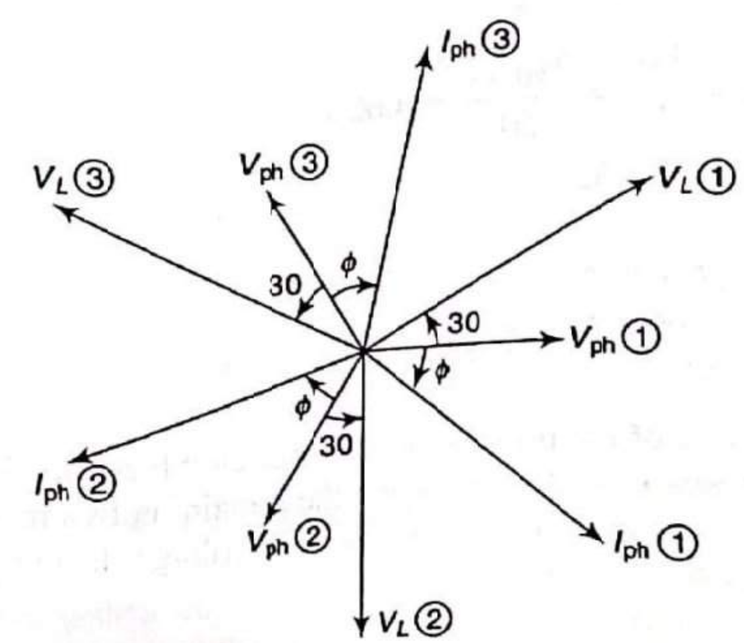

Fig. 3.21

The phasor diagram can be drawn by using the following steps:

Step I: Take the first phase voltage, i.e., $V_{ph}(1)$ as reference and draw the three phase voltages. All the three phase voltages [$V_{ph}(1)$, $V_{ph}(2)$ and $V_{ph}(3)$] are equal in magnitude and 120° apart.

Step II: As load is balanced, all the three phase currents $I_{ph}(1)$, $I_{ph}(2)$ and $I_{ph}(3)$ are equal in magnitude. As load is inductive, phase current lags behind its respective phase voltage by an angle ϕ. Draw the three phase currents.

Step III: Line currents are the same as phase currents for star connection. Hence, separate line currents need not be shown.

Step IV: All the three line voltages [$V_L(1)$, $V_L(2)$ and $V_L(3)$] are equal in magnitude. In star connection, line voltage leads the respective phase voltage by 30°. Draw the three line voltages.

Example 3.12 Three 50 Ω resistors are connected in star across a 400 V, three-phase supply. Find phase current, line current and power taken from the mains. What would be these values if one of the resistors is disconnected?

Solution

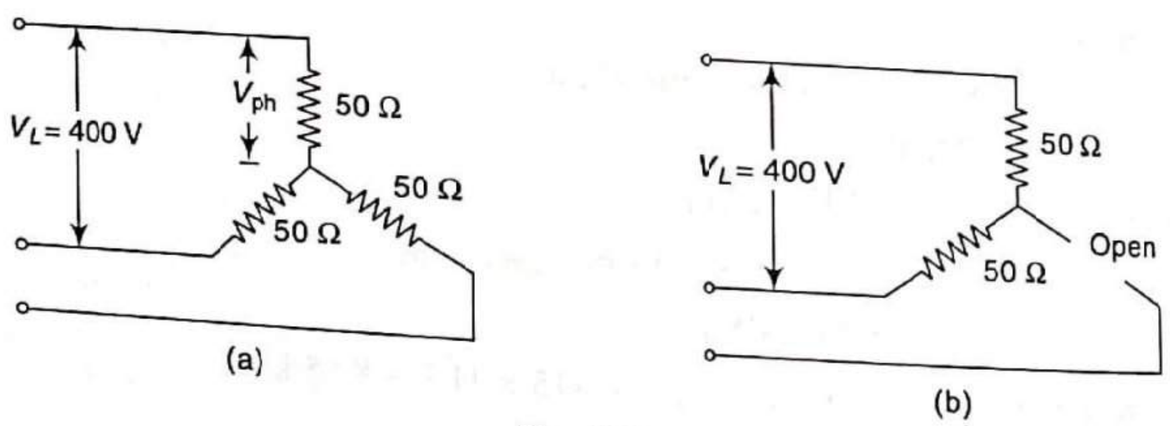

Fig. 3.22

Case (i) When the three 50 Ω resistors are star connected [see Fig. 3.22(a)].

Phase voltage, $V_{ph} = \dfrac{V_L}{\sqrt{3}} = \dfrac{400}{\sqrt{3}} = 230.94$ V

Phase current, $I_{ph} = \dfrac{V_{ph}}{Z_{ph}} = \dfrac{230.94}{50} = 4.62$ A

Line current, $I_L = I_{ph} = 4.62$ A

Power taken,

$$P = \sqrt{3} V_L I_L \cos\phi$$
$$= \sqrt{3} \times 400 \times 4.62 \times 1$$
$$= 3200 \text{ W}$$

Case (ii) When one of the resistors is disconnected [see Fig. 3.22(b)].

When one of the resistors is disconnected, the remaining two resistors behave as if they were connected in series across the line voltage. In fact, the circuit behaves as a single-phase circuit,

So, $I_{ph} = I_L = \dfrac{400}{50+50} = 4$ A

Power taken, $P = V_L I_L \cos\phi$
$= 400 \times 4 \times 1 = 1600$ W

Hence, by disconnecting one of the resistors, the power consumption is reduced by one-half.

Example 3.13 Three 40 Ω resistors are connected in delta across 400 V, three-phase supply. Calculate the power taken from the mains. If one of the resistance is disconnected, what would be the power taken from the mains?

Solution

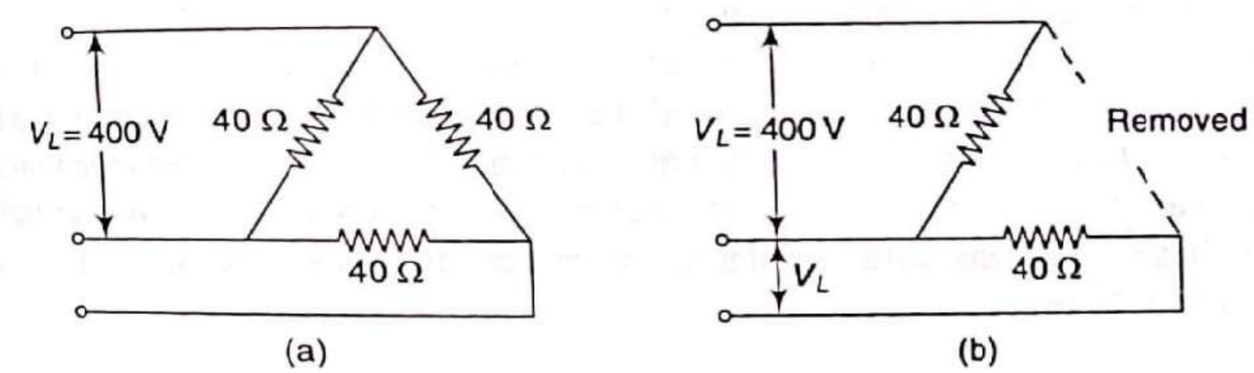

Fig. 3.23

Case (i) When the three resistors are delta connected [see Fig. 3.23(a)].

$V_{ph} = V_L = 400$ V, $R = 40$ Ω

$$I_{ph} = \frac{V_{ph}}{R} = \frac{400}{40} = 10 \text{ A}$$

$$I_L = \sqrt{3} I_{ph} = \sqrt{3} \times 10 = 17.32 \text{ A}$$

$$P = \sqrt{3} V_L I_L \cos\phi$$
$$= \sqrt{3} \times 400 \times 17.32 \times 1$$
$$= 12{,}000 \text{ W}$$

Case (ii) When one of the resistors is removed [see Fig. 3.23(b)].

In this case each of the two resistors acts independently as if 400 V were applied to 40 Ω.

Current in each resistor, $I = \dfrac{400}{40} = 10$ A

Power consumed in the two resistors $= 2I^2R = 2 \times (10)^2 \times 40 = 8000$ W

Hence, by disconnecting one resistor, the power consumption is reduced by one-third.

3.6 Three-Phase Power Measurement

A wattmeter is an instrument used for the measurement of power. The power consumed in a dc circuit is the product of the voltage and the current, and for an ac circuit, it is the product of the rms voltage, the rms current, and the power

factor of the circuit. Therefore, an ac circuit requires the use of wattmeter to measure the power.

The wattmeter has two coils, the current coil and the potential coil or the pressure coil. The current coil has two terminals marked as M and L. M stands for mains and L is for load. The potential or pressure coil has two terminals marked as C and V. C is the common terminal and V indicates the voltage rating.

Figure 3.24 shows the common method of connecting the wattmeter to measure a power in a single-phase circuit. Current coil senses the current and always connected like an ammeter in series with the load to carry the load current. Similar to ammeter, the resistance of the current coil is as small as possible and hence its cross-sectional area is large and it has less number of turns. Care is required to be taken while connecting the current coil, i.e., terminal M should be connected to mains (i.e., towards source) and terminal L to load. Pressure coil senses the voltage and always to be connected like a voltmeter so that potential across it is equal to the voltage across the load. Similar to voltmeter, the resistance of the pressure coil is very large.

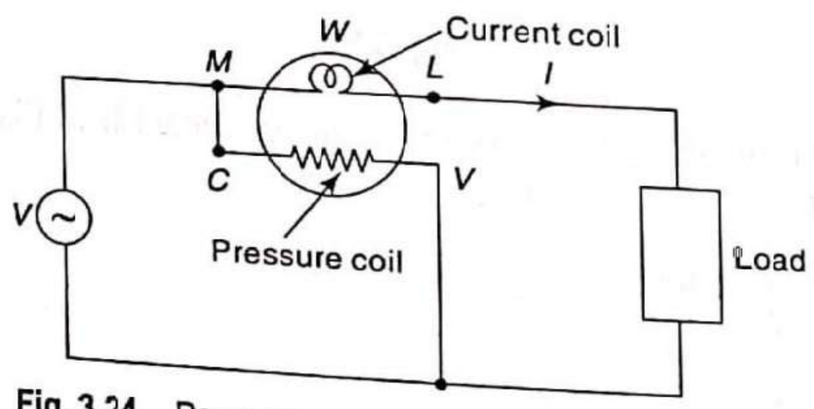

Fig. 3.24 Power measurment in a single-phase circuit

The wattmeter reading depends on its connection. It is important to note that wattmeter senses the angle between the current phasor which is sensed by its current coil and the voltage phasor which is sensed by its pressure coil. In general, if I_C is the current through the current coil and V_p is the voltage across the pressure coil then wattmeter reading is given by

$$W = V_P \times I_C \times \cos (V_P \wedge I_C) \text{ W} \tag{3.11}$$

There are three methods to measure the power in a three-phase circuit:

1. One-wattmeter method
2. Two-wattmeter method
3. Three-wattmeter method

3.6.1 One-Wattmeter Method

One-wattmeter method is used for balanced load (Y-connected or Δ-connected) only. When load is balanced, the total power can be calculated as

$$P = 3V_{ph}I_{ph} \cos \phi \tag{3.12}$$

where ϕ is the angle between the phase voltage and the corresponding phase current.

In a three-phase star-connected balanced load, power can be measured by connecting the current coil of the wattmeter in any one phase and its pressure coil between the same phase and the neutral as shown in Fig. 3.25.

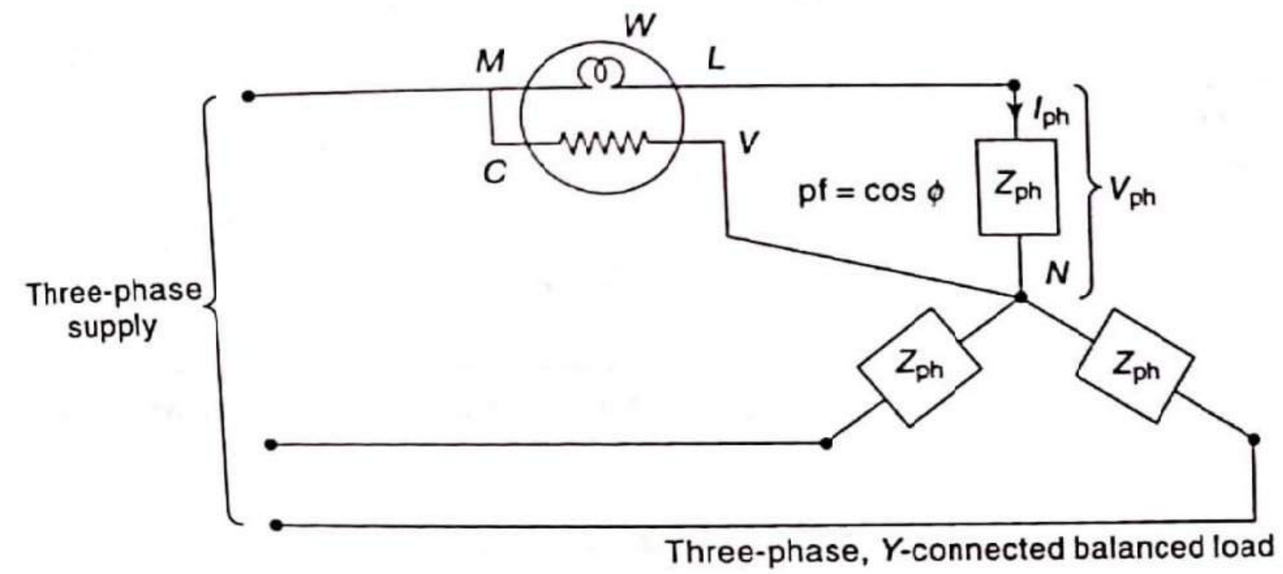

Fig. 3.25 One-wattmeter method

From the circuit diagram, the wattmeter reading is given as

$$W = V_{ph}I_{ph} \cos \phi$$

From Eq. (3.12), the total power is given as

$$P = 3 \times V_{ph}I_{ph} \cos \phi$$

or $$P = 3 \times W$$

Thus, the reading shown by the wattmeter is the active power per phase. The total active power of the star-connected balanced load is equal to three times the wattmeter reading.

3.6.2 Two-Wattmeter Method

Two-wattmeter method is quite convenient for measuring power in the star or delta-connected balanced or unbalanced load of a three-phase system. In this method, the current coils of the two wattmeters are connected in any two lines while voltage coil of each wattmeter is connected to the third line. For example, if the current coils are inserted in the lines R and B then the pressure coils are connected between R-Y for one wattmeter and B-Y for other wattmeter, as shown in Fig. 3.26.

The connections are same for the star- or delta-connected load. It can be prove that when two wattmeters are connected in this way, the algebraic sum of the two wattmeter readings gives the total power consumed by the three-phase load.

Proof

Consider a three-phase star-connected balanced load as shown in Fig. 3.26. Load may be assumed to be inductive, i.e., power factor of the load is cos ϕ lagging.

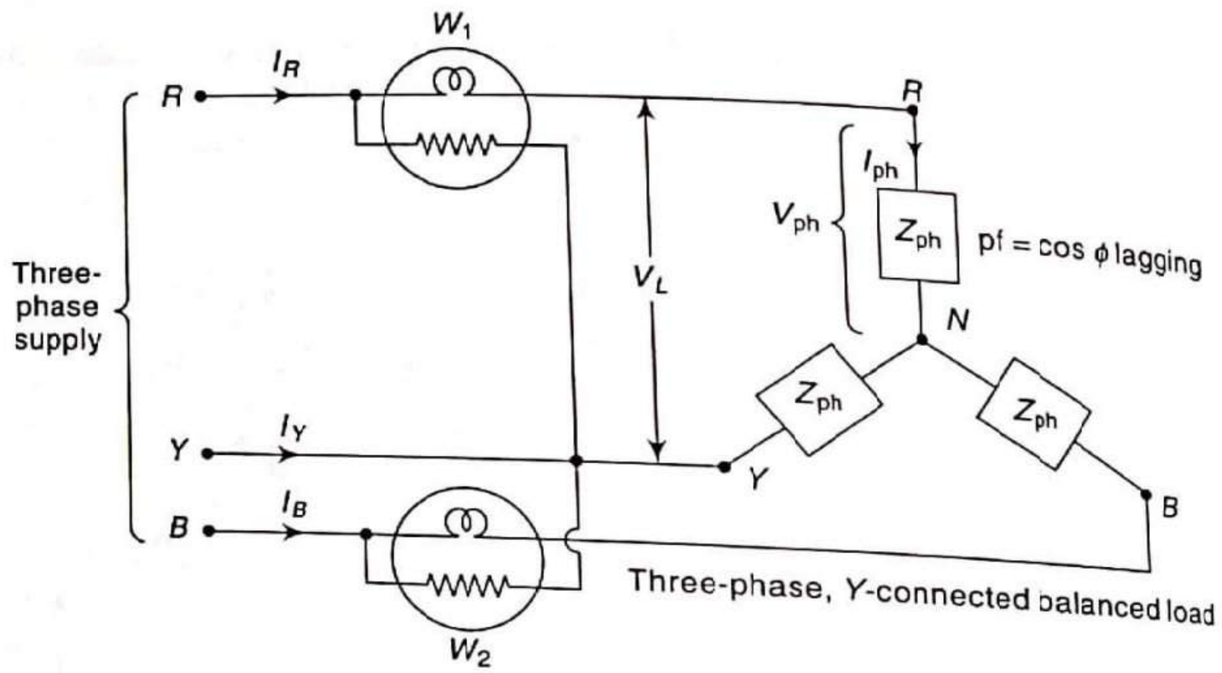

Fig. 3.26 Two-wattmeter method

As load is balanced, all the three phase voltages V_{RN}, V_{YN} and V_{BN} are equal in magnitude and 120° apart. By phase sequence, V_{YN} will be 120° behind V_{RN}, and V_{BN} will be 240° behind that of V_{RN}. The magnitude of each phase voltage is denoted by V_{ph}.

So, $V_{ph} = V_{RN} = V_{YN} = V_{BN}$

The three-phase currents are I_R, I_Y and I_B,

$\therefore \quad I_{ph} = I_R = I_Y = I_B$

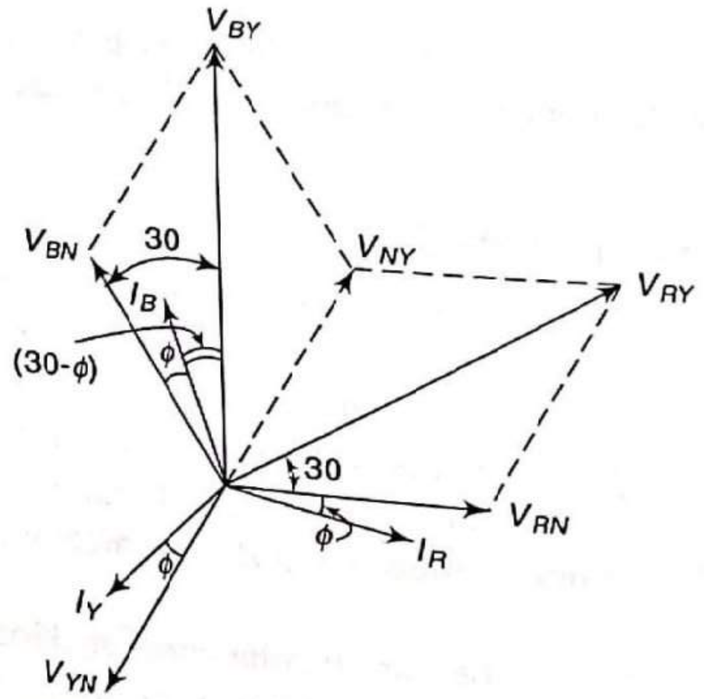

Fig. 3.27 Phasor diagram

According to the connection shown in Fig. 3.27, wattmeter reading W_1 is given by

$$W_1 = V_{RY} I_R \cos(\text{angle between } \bar{V}_{RY} \text{ and } \bar{I}_R)$$

or $$W_1 = V_{RY} I_R \cos(\bar{V}_{RY} \wedge \bar{I}_R)$$

From the circuit diagram shown in Fig. 3.27,

voltage across the voltage coil of wattmeter W_1, $\bar{V}_{RY} = \bar{V}_{RN} + \bar{V}_{NY}$.

From the phasor diagram, it is clear that angle between V_{RY} and I_R is $(30 + \phi)$.

So, wattmeter reading, $W_1 = V_{RY} I_R \cos(30 + \phi)$

As $V_{RY} = V_L$ and $I_R = I_L$,

wattmeter reading,

$$W_1 = V_L I_L \cos(30 + \phi) \tag{3.13}$$

According to the connection shown in Fig. 3.27, wattmeter reading W_2 is given by

$$W_2 = V_{BY} I_B \cos(\bar{V}_{BY} \wedge \bar{I}_B)$$

Again, from the circuit diagram shown in Fig. 3.27,

voltage across the voltage coil of wattmeter W_2, $\bar{V}_{BY} = \bar{V}_{BN} + \bar{V}_{NY}$

From the phasor diagram, it is clear that angle between V_{BY} and I_B is $(30 - \phi)$.

So, wattmeter reading, $W_2 = V_{BY} I_B \cos(30 - \phi)$

As $V_{BY} = V_L$ and $I_B = I_L$,

wattmeter reading,

$$W_2 = V_L I_L \cos(30 - \phi) \tag{3.14}$$

By adding the Eqs. (3.13) and (3.14), we get

$$\begin{aligned} W_1 + W_2 &= V_L I_L \cos(30 + \phi) + V_L I_L \cos(30 - \phi) \\ &= V_L I_L [\cos(30 + \phi) + \cos(30 - \phi)] \\ &= V_L I_L [2 \cos 30 \cos \phi] \\ &= \sqrt{3}\, V_L I_L \cos \phi \end{aligned} \tag{3.15}$$

RHS of Eq. (3.15) indicates the active power of the three-phase circuit. Thus, it is proved that when two wattmeters are connected as shown in Fig. 3.27, the algebraic sum of the two wattmeter readings gives the total power consumed by the three-phase load.

Subtracting Eq. (3.13) from (3.14), we get

$$\begin{aligned} W_2 - W_1 &= V_L I_L \cos(30 - \phi) - V_L I_L \cos(30 + \phi) \\ &= V_L I_L [\cos(30 - \phi) - \cos(30 + \phi)] \\ &= V_L I_L [2 \sin 30 \sin \phi] \\ &= V_L I_L \sin \phi \end{aligned}$$

Multiplying both sides by $\sqrt{3}$, we get

$$\sqrt{3}(W_2 - W_1) = \sqrt{3} V_L I_L \sin \phi \tag{3.16}$$

RHS of Eq. (3.16) indicates the total volt-ampere reactive power for a three-phase circuit.

Thus, the reactive power, $Q = \sqrt{3}(W_2 - W_1)$

Now, dividing Eq. (3.16) by Eq. (3.15), we get

$$\frac{\sqrt{3}(W_2 - W_1)}{(W_1 + W_2)} = \frac{\sqrt{3} V_L I_L \sin \phi}{\sqrt{3} V_L I_L \cos \phi}$$

$$= \tan \phi$$

or $$\phi = \tan^{-1}\left\{\frac{\sqrt{3}\,(W_2 - W_1)}{(W_1 + W_2)}\right\}$$

Now, $$\text{pf} = \cos\phi = \cos\left\{\tan^{-1}\left(\frac{\sqrt{3}\,(W_2 - W_1)}{(W_1 + W_2)}\right)\right\} \tag{3.17}$$

Thus, various advantages of the two-wattmeter method are as follows:

1. The method is applicable for balanced as well as unbalanced loads.
2. From wattmeter readings, the reactive power can be calculated.
3. If the load is balanced, not only the power but also the power factor can be determined.
4. Neutral point for star connected load is not necessary to connect the wattmeters.

3.6.3 Effect of Load Power Factor on Wattmeter Readings

We have seen that for lagging load (balanced), power factor of $\cos\phi$, the two wattmeter readings are:

$$W_1 = V_L I_L \cos(30 + \phi)$$
$$W_2 = V_L I_L \cos(30 - \phi)$$

It is clear that readings of the two wattmeters depend upon the load power factor angle ϕ.

(i) When power factor is unity (i.e., $\phi = 0$):

$$W_1 = V_L I_L \cos(30 + 0) = V_L I_L \cos 30°$$
$$W_2 = V_L I_L \cos(30 - 0) = V_L I_L \cos 30°$$

Both the wattmeters indicate equal and positive readings.

(ii) When power factor is 0.5 (i.e., $\phi = 60$):

$$W_1 = V_L I_L \cos(30 + 60) = 0$$
$$W_2 = V_L I_L \cos(30 - 60) = V_L I_L \cos 30°$$

Total power is measured by W_2 alone.

(iii) When power factor is less than 0.5 but greater than 0 (i.e., $90 > \phi > 60$):

W_1 = negative reading

W_2 = positive reading

(iv) When power factor is zero (i.e., $\phi = 90$):

Such a case will occur when the load consists of pure inductance or pure capacitance.

$$W_1 = V_L I_L \cos(30 + 90) = -V_L I_L \sin 30°$$
$$W_2 = V_L I_L \cos(30 - 90) = V_L I_L \sin 30°$$

Thus, the two wattmeters show equal and opposite readings.

So, $W_1 + W_2 = 0$

The above facts are summarized in the tabular form below:

ϕ	0°	60°	More than 60°	90°
$\cos\phi$	1	0.5	< 0.5	0
W_2	Positive	Positive	Positive	Positive
W_1	Positive	0	Negative	Negative
Conclusion	$W_1 = W_2$ Total power $= W_1 + W_2$	$W_1 = 0$ Total power $= W_2$	Total power $= W_1 + W_2$	$W_2 = -W_1$ Total power $= 0$

The following points may be noted carefully:

1. The wattmeter whose deflection is proportional to $(30 - \phi)$ (i.e., W_2 in this case) is always positive and is the higher reading wattmeter.
2. The wattmeter whose deflection is proportional to $(30 + \phi)$ (i.e., W_1 in this case) is the lower reading wattmeter.

In discussing two-wattmeter method for measuring power in a three-phase balanced load, we have considered lagging power factor load, i.e., power factor angle ϕ is positive. For leading power factor, angle ϕ becomes negative. Therefore, by putting the value of load pf angle as $-\phi$ in the readings of the two wattmeters, we have

$$W_2 = V_L I_L \cos(30 + \phi)$$
$$W_1 = V_L I_L \cos(30 - \phi)$$

Note that effect of leading power factor is that the readings of the two wattmeters are interchanged. Now, wattmeter W_1 has become the higher reading wattmeter.

We know that for lagging pf load, from wattmeter readings, the phase angle ϕ can be calculated as

$$\phi = \tan^{-1}\left\{\frac{\sqrt{3}\,(W_2 - W_1)}{(W_1 + W_2)}\right\} \quad \text{for lagging pf}$$

As for leading pf, wattmeter W_1 becomes the higher reading wattmeter, the formula will modify as

$$\phi = \tan^{-1}\left\{\frac{\sqrt{3}\,(W_1 - W_2)}{(W_1 + W_2)}\right\} \quad \text{for leading pf}$$

Thus, for calculation of phase angle from wattmeter readings, the following general formula (for both lagging and leading pf) can be used:

$$\phi = \tan^{-1}\left\{\frac{\sqrt{3}\,(\text{Higher reading} - \text{Lower reading})}{\text{Lower reading} + \text{Higher reading}}\right\}$$

We have already discussed that higher-reading wattmeter always read positive. The lower-reading wattmeter may read positive or negative depending upon the load power factor.

For example, in the two-wattmeter method if the two wattmeter readings are 12.5 and –4.8 kW, then

$$\phi = \tan^{-1}\left\{\frac{\sqrt{3}\,[(12.5)-(-4.8)]}{(-4.8)+(12.5)}\right\} = \tan^{-1}3.89 = 75.6$$

So, Power factor, $\cos\phi = \cos 75.6° = 0.2487$

Note that we can find only the magnitude of power factor with the help of the above formula. It does not tell us about the nature of the load, i.e., whether the pf is lagging or leading. In many cases, this can not be judged from the nature of the load. Also note that a wattmeter can not give negative reading. Negative reading is obtained after reversing the connections of either potential or current coil.

Example 3.14 Three identical coils, each having a resistance of 10 Ω and an inductive reactance of 10 Ω are connected in (a) star, (b) delta connection, across 400 V, three-phase supply. Find in each case the line current and the readings on each of the two wattmeters connected to measure the power.

Solution

(a) Star connection:

A 400 V, three-phase voltage is applied to three star-connected identical coils, as shown in Fig. 3.28.

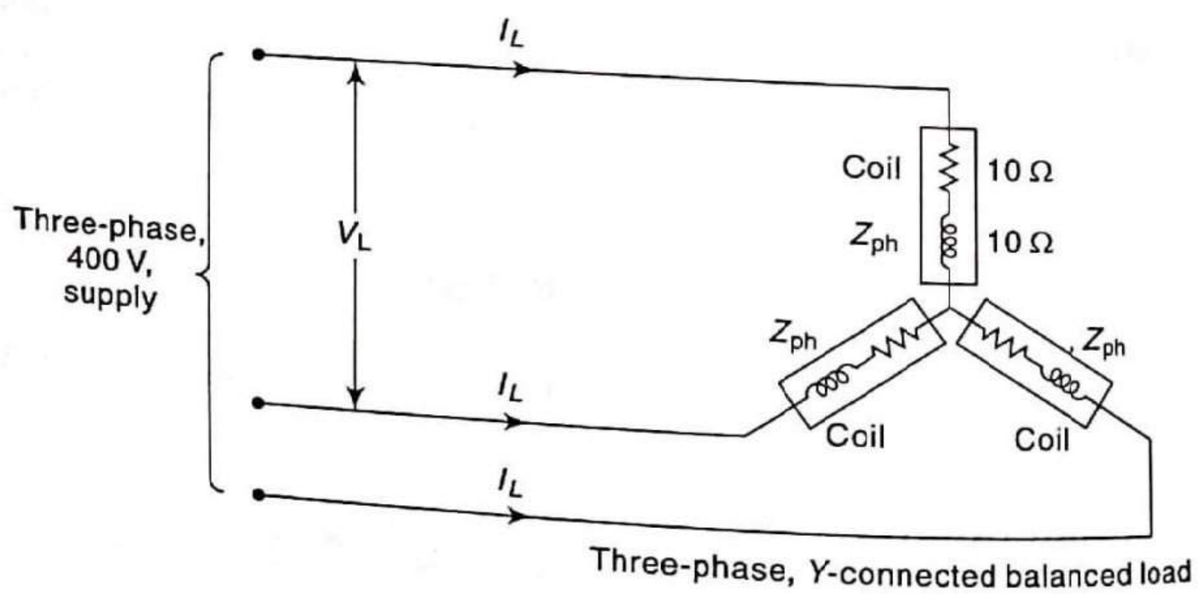

Fig. 3.28

Given:

$$V_L = 400\text{ V},\ R = 10\ \Omega,\ X_L = 10\ \Omega$$

Impedance of coil, i.e., phase impedance is

$$\bar{Z}_{ph} = (10 + j10)\ \Omega = (14.14\angle 45)\ \Omega$$

So, $Z_{ph} = 14.14\ \Omega$ and $\phi = 45°$

For star-connected load,

$$V_{ph} = \frac{V_L}{\sqrt{3}} = \frac{400}{\sqrt{3}} = 230.94\text{ V}$$

$$\text{Phase current, } I_{ph} = \frac{V_{ph}}{Z_{ph}} = \frac{230.94}{14.14} = 16.33\text{ A}$$

Line current, $I_L = I_{ph} = 16.33$ A

Total power, $P = \sqrt{3}\,V_L I_L \cos\phi$

$= \sqrt{3} \times 400 \times 16.33 \times \cos 45$

$= 8000$ W

Let W_1 and W_2 be the wattmeter readings, W_2 being the higher-reading wattmeter. In the two-wattmeter method, the algebraic sum of the two wattmeter readings gives the total power.

So, $W_1 + W_2 = 8000$ (i)

Also

$$\phi = \tan^{-1}\left\{\frac{\sqrt{3}\,(W_2 - W_1)}{(W_1 + W_2)}\right\}$$

So, $$\tan 45° = \left\{\frac{\sqrt{3}\,(W_2 - W_1)}{(W_1 + W_2)}\right\}$$

or $$1 = \left\{\frac{\sqrt{3}\,(W_2 - W_1)}{8000}\right\}$$

or $W_2 - W_1 = 4619$ (ii)

Solving Eqs (i) and (ii), we get

$$W_2 = 6309.5\text{ W},\quad W_1 = 1690.5\text{ W}$$

(b) Delta connection:

The same three coils are connected in delta across the same supply. Thus,

$$V_L = 400\text{ V},\quad Z_{ph} = 14.14\ \Omega,\quad \text{and}\quad \phi = 45$$

For delta-connected load,

$$V_{ph} = V_L = 400\text{ V}$$

$$\text{Phase current, } I_{ph} = \frac{V_{ph}}{Z_{ph}} = \frac{400}{14.14} = 28.29\text{ A}$$

Line current, $I_L = \sqrt{3}\,I_{ph} = \sqrt{3} \times 28.28 = 49$ A

Total power, $P = \sqrt{3}\,V_L I_L \cos\phi$

$= \sqrt{3} \times 400 \times 49 \times \cos 45°$

$= 24004$ W

Let W_1 and W_2 be the wattmeter readings, W_2 being the higher-reading wattmeter. In the two-wattmeter method, the algebraic sum of the two wattmeter readings gives the total power.

So, $W_1 + W_2 = 24004$ (iii)

Also

$$\phi = \tan^{-1}\left\{\frac{\sqrt{3}(W_2 - W_1)}{(W_1 + W_2)}\right\}$$

or $$\tan 45° = \left\{\frac{\sqrt{3}(W_2 - W_1)}{(W_1 + W_2)}\right\}$$

or $$1 = \left\{\frac{\sqrt{3}(W_2 - W_1)}{24004}\right\}$$

or $W_2 - W_1 = 13858.7$ (iv)

Solving Eqs (iii) and (iv), we get

$W_2 = 18931.35$ W, $W_1 = 5072.65$ W

Example 3.15 Each phase of a three-phase delta-connected load has an impedance of $\bar{Z}_{ph} = (50\angle 60)\ \Omega$. The line voltage is 400 V. Calculate the total power. What will be the readings of the two wattmeters connected to measure the power?

Solution

$V_L = 400$ V, $Z_{ph} = 50\ \Omega$, and $\phi = 60°$

For delta-connected load,

$V_{ph} = V_L = 400$ V

Phase current, $I_{ph} = \dfrac{V_{ph}}{Z_{ph}} = \dfrac{400}{50} = 8$ A

Line current, $I_L = \sqrt{3} I_{ph} = \sqrt{3} \times 8 = 13.86$ A

Total power, $P = \sqrt{3} V_L I_L \cos\phi$

$= \sqrt{3} \times 400 \times 13.86 \times \cos 60°$

$= 4801.2$ W

Let W_1 and W_2 be the wattmeter readings, W_2 being the higher-reading wattmeter. In the two-wattmeter method, the algebraic sum of the two wattmeter readings gives the total power.

So, $W_1 + W_2 = 4801.2$ W (i)

Also

$$\phi = \tan^{-1}\left\{\frac{\sqrt{3}(W_2 - W_1)}{(W_1 + W_2)}\right\}$$

or $$\tan 60° = \left\{\frac{\sqrt{3}(W_2 - W_1)}{(W_1 + W_2)}\right\}$$

or $$\tan 60° = \left\{\frac{\sqrt{3}(W_2 - W_1)}{4801.2}\right\}$$

So, $W_2 - W_1 = 4801.2$ (ii)

Solving Eqs (i) and (ii), we get

$W_2 = 4801.2$ W, $W_1 = 0$ W

Since the pf is 0.5, the reading of W_1 (i.e., lower-reading wattmeter) must be zero.

Example 3.16 Two wattmeters connected to measure the input to balanced three-phase circuit indicates 2500 and 500 W, respectively. Find the total power supplied, and the power factor of the circuit: (i) when both the readings are positive, and (ii) when the latter reading is obtained after reversing the connections to the current coil.

Solution

(i) When both the readings are positive:

$W_2 = 2500$ W and $W_1 = 500$ W

$P = W_1 + W_2 = 500 + 2500 = 3000$ W

Phase angle, $$\phi = \tan^{-1}\left\{\frac{\sqrt{3}(\text{Higher reading} - \text{Lower reading})}{\text{Lower reading} + \text{Higher reading}}\right\}$$

$$= \tan^{-1}\left\{\frac{\sqrt{3}(2500 - 500)}{500 + 2500}\right\} = \tan^{-1}(1.1547) = 49.11°$$

So, power factor $= \cos\phi = \cos 49.11° = 0.6546$

(ii) When W_1 is negative:

$W_2 = 2500$ W and $W_1 = -500$ W

$P = W_1 + W_2 = -500 + 2500 = 2000$ W

Phase angle, $$\phi = \tan^{-1}\left\{\frac{\sqrt{3}(\text{Higher reading} - \text{Lower reading})}{\text{Lower reading} + \text{Higher reading}}\right\}$$

$$= \tan^{-1}\left\{\frac{\sqrt{3}[2500 - (-500)]}{-500 + 2500}\right\} = \tan^{-1}(2.598) = 68.95°$$

So, power factor $= \cos\phi = \cos 68.95° = 0.3592$

Example 3.17 The readings of two wattmeters connected to measure the total power in a three-phase star-connected 400 V system are 3000 W and 5000 W. Find the power factor, the total power, and the line current.

Solution

We have $V_L = 400$ V, $W_1 = 3000$ W, $W_2 = 5000$ W

$$\text{Phase angle, } \phi = \tan^{-1}\left\{\frac{\sqrt{3}\,(\text{Higher reading} - \text{Lower reading})}{\text{Lower reading} + \text{Higher reading}}\right\}$$

$$= \tan^{-1}\left\{\frac{\sqrt{3}\,(5000 - 3000)}{3000 + 5000}\right\} = \tan^{-1}(0.4330) = 23.41°$$

So, power factor = $\cos\phi = \cos 23.41° = 0.9177$

Total power, $P = W_1 + W_2 = 3000 + 5000 = 8000$ W

As total power, $P = \sqrt{3}\,V_L I_L \cos\phi$,

$$8000 = \sqrt{3} \times 400 \times I_L \times 0.9177$$

Hence, $I_L = 12.58$ A

Example 3.18 The power input to a three-phase induction motor running on a 400 V, 50 Hz supply was measured by two-wattmeter method, and the readings were 3000 W and –1000 W. Calculate (i) total input power, (ii) power factor, and (iii) line current.

Solution

A three-phase induction motor can be treated as a three-phase star or delta-connected balanced load with lagging power factor. It receives the electrical power from the three-phase supply and converts it into rotational (mechanical) power.

We have $V_L = 400$ V, $W_1 = -1000$ W, $W_2 = 3000$ W

$$\text{Phase angle, } \phi = \tan^{-1}\left\{\frac{\sqrt{3}\,(\text{Higher reading} - \text{Lower reading})}{\text{Lower reading} + \text{Higher reading}}\right\}$$

$$= \tan^{-1}\left\{\frac{\sqrt{3}\,[3000 - (-1000)]}{-1000 + 3000}\right\} = \tan^{-1}(3.464) = 73.90°$$

So, power factor = $\cos\phi = \cos 73.90° = 0.2773$ lagging

Total power, $P = W_1 + W_2 = -1000 + 3000 = 2000$ W

As total power, $P = \sqrt{3}\,V_L I_L \cos\phi$,

$$2000 = \sqrt{3} \times 400 \times I_L \times 0.2773$$

Hence, $I_L = 10.41$ A

Example 3.19 The power input to a 2000 V, 50 Hz three-phase induction motor running on a full load at an efficiency of 90% is measured by two wattmeters, which indicate 300 kW and 100 kW respectively. Calculate (i) input power, (ii) power factor, and (iii) line current.

Solution

We have $V_L = 2000$ V, $W_1 = 100$ kW, $W_2 = 300$ kW, $\eta = 0.9$

Total power, $P = W_1 + W_2 = 100 + 300 = 400$ kW

$$\text{Phase angle, } \phi = \tan^{-1}\left\{\frac{\sqrt{3}\,(\text{Higher reading} - \text{Lower reading})}{\text{Lower reading} + \text{Higher reading}}\right\}$$

$$= \tan^{-1}\left\{\frac{\sqrt{3}\,(300 - 100)}{100 + 300}\right\} = \tan^{-1}(0.866) = 40.89°$$

So, power factor = $\cos\phi = \cos 40.89° = 0.76$ lagging

As total power, $P = \sqrt{3}\,V_L I_L \cos\phi$,

$$400 \times 10^3 = \sqrt{3} \times 2000 \times I_L \times 0.76$$

Hence, $I_L = 151.93$ A

Example 3.20 A three-phase, 220 V, 50 Hz, 11.2 kW induction motor has a full-load efficiency of 88% and draws a line current of 38 A under full load, when connected to three-phase, 220 V supply. Find the reading on two wattmeters connected in the circuit to measure the input to the motor. Determine also the power factor at which the motor is operating.

Solution

We have $V_L = 220$ V, $I_L = 38$ A, $\eta = 0.88$, Output power = 11.2 kW

$$\text{Efficiency, } \eta = \frac{\text{Output power}}{\text{Input power}(p)}$$

So, $$0.88 = \frac{11.2}{\text{Input power } (p)}$$

or Input power $(p) = 12.727$ kW

As input power, $P = \sqrt{3}\,V_L I_L \cos\phi$,

$$12.727 \times 10^3 = \sqrt{3} \times 220 \times 38 \times \cos\phi$$

or $\cos\phi = 0.87894$ (lagging)

or $\phi = 28.485°$

Wattmeter reading, $W_2 = V_L I_L \cos(30 - \phi)$

$= 220 \times 38 \times \cos(30 - 28.485°)$

$= 8357$ W

Wattmeter reading, $W_1 = V_L I_L \cos(30 + \phi)$

$= 220 \times 38 \times \cos(30 + 28.485°)$

$= 4370$ W

Example 3.21 In a balanced three-phase circuit, power is measured by two wattmeters, and the ratio of two wattmeter readings is 2:1. Determine the power factor of the system.

Solution

Let $\frac{W_2}{W_1} = \frac{2}{1}$ or $W_2 = 2W_1$

$$\text{Phase angle, } \phi = \tan^{-1}\left\{\frac{\sqrt{3}(\text{Higher reading} - \text{Lower reading})}{\text{Lower reading} + \text{Higher reading}}\right\}$$

$$= \tan^{-1}\left\{\frac{\sqrt{3}(W_2 - W_1)}{W_1 + W_2}\right\} = \tan^{-1}\left\{\frac{\sqrt{3}(2W_1 - W_1)}{W_1 + 2W_1}\right\}$$

$$= \tan^{-1}\left\{\frac{1}{\sqrt{3}}\right\} = 30°$$

Hence, power factor = $\cos\phi = \cos 30° = 0.866$

EXERCISES

1. Explain the concept of a three-phase emf generation.
2. What are the advantages of three-phase system over single-phase system?
3. Show that the sum of three phase emf's is zero in a three-phase ac circuit.
4. Derive the relationship between phase and line voltages, and currents for a star-connected balanced load across a three-phase balanced system.
5. Draw a neat phasor diagram, showing all phase currents, line currents, phase voltages of a three-phase delta-connected load, and hence, prove that line current = $\sqrt{3}$ phase current. Also derive the expression for the power consumed by the load.
6. Draw a circuit diagram for the measurement of power in a three-phase load system by the two wattmeters. For balanced loads, derive the expression for the wattmeter readings.
7. Show that the total power and pf in a three-phase balanced system can be determined using two wattmeters. Draw the vector diagram.
8. In a three-phase power measurement by two-wattmeter method, both the wattmeters read the same value. What is the power factor of the load? Justify your answer.
9. Explain the merits of two-wattmeter method.
10. Define the terms: (i) phase sequence, (ii) balanced load, (iii) symmetrical system.
11. Three impedances each of $(6 + j8)\ \Omega$ are connected in star across a 50 Hz, three-phase, 400 V ac supply. Calculate the power and power factor of the load. Also calculate the power if the impedances are connected in delta.
[*Ans.* 9600 W; 0.6 (lagging); 28,800 W]

12. A balanced delta-connected load has an impedance of $(30 - j40)\ \Omega$ in each branch. Determine branch currents, line currents, total power taken, and power factor if balanced three-phase 400 V, 50 Hz supply is used. Find the value of reactive element in suitable unit.
[*Ans.* 8 A; 13.856 A; 5760 W; 0.6 (leading); 79.577 μF]
13. Three identical choke coils are connected as a delta load to a three-phase supply. The line current drawn from the supply is 15 A and the total power consumed is 7.5 kW. The kVA input to the load is 10 kVA. Find:
(i) Line and phase voltage
(ii) Impedance/phase
(iii) Reactance/phase
(iv) Resistance/phase
(v) Power factor (pf)
(vi) Phase current
(vii) Inductance if frequency is 50 Hz/phase
[*Ans.* (i) 384.9 V, (ii) 44.45 Ω, (iii) 29.4 Ω, (iv) 33.34 Ω, (v) 0.75 lagging, (vi) 8.66 A, (vii) 0.0936 H]
14. Calculate the phase and line currents in a balanced delta-connected load taking 75 kW at a power factor 0.8 from a three-phase 440 V supply.
[*Ans.* 71.02 A; 123 A]
15. Three identical inductive loads of resistance 15 Ω and reactance 40 Ω are connected in star to a 440 V, three-phase supply. Calculate (i) phase current, (ii) line current, and (iii) power absorbed.
[*Ans.* (i) 5.95 A, (ii) 5.95 A, (iii) 1592.47 W]
16. Three similar resistors are connected in star across a 415 V, three-phase supply, and the line current is 10 A. Calculate (i) the value of each resistance, and (ii) the line voltage required to give the same line current if the resistors were delta connected. [*Ans.* (i) 23.96 Ω, (ii)138.33 V]
17. A balanced three-phase load consists of three coils, each of resistance 4 Ω and inductance 0.02 H. Determine the total power when the coils are (i) star-connected, (ii) delta-connected to a 400 V, three-phase, 50 Hz supply.
[*Ans.* (i) 11.54 kW, (ii) 34.6 kW]
18. Two wattmeters are used to measure power in a three-phase balanced load. The wattmeter readings are 8.2 kW and 7.5 kW. Calculate (i) total power, (ii) power factor, and (iii) total reactive power.
[*Ans.* (i) 15.7 kW, (ii) 0.997, (iii) 1.21 kVAR
19. A balanced three-phase load takes 10 kW at a pf of 0.9 lagging, calculate the readings on each of the two wattmeters connected to read the input power. [*Ans.* 6398 W; 3602 W]
20. A 440 V, three-phase induction motor has an output of 20.7 kW at a pf of 0.82 and an efficiency of 85%. Calculate the readings on each of the two wattmeters connected to measure the input. [*Ans.* 17.08 kW; 7.27 kW]
21. The ratio of the readings of two wattmeters connected to measure power in a balanced three-phase, three-wire load is 5:3. The load is known to be inductive. Calculate the power factor of the load. [*Ans.* 0.917 lag]

4

Single-Phase Transformer

4.1 Introduction

A **transformer** is a static device by means of which electric power from one circuit can be transferred to another circuit without change in frequency. It can raise or lower the voltage in a circuit but with a corresponding decrease or increase in current. Transformer works on the principle of mutual induction.

In electric systems, transformers are used near generating stations for stepping up the voltage. In a typical power system, voltage is generated at the level of 11 kV or 22 kV. It is stepped up to 220 kV or 400 kV by using step-up transformers. High voltage during transmission helps to increase efficiency of the system by reducing line losses[1]. At the end of transmission line, again a step-down transformer is used to reduce the voltage to 11 kV. During distribution of power, again transformers are used to change the voltage level to 400 V (line voltage) or 230 V (phase voltage). Thus, transformers are required at all the stages (see Fig. 4.1).

4.2 Working Principle

A transformer consists of two inductive coils or windings placed on a common core. Windings are electrically insulated from each other. The winding or coil in which electrical energy is fed is called **primary winding** and the other from which electrical energy is drawn out is called **secondary winding** [refer to Fig. 4.2(a)].

When an alternating voltage V_1 is applied to primary coil of a transformer, an alternating current I_1 flows through it producing alternating flux in the core. This flux links with the primary winding and according to Faraday's law of electromagnetic induction, an emf e_1 is induced in the primary coil, which is given by

$$e_1 = -N_1 \frac{d\Phi}{dt} \text{ V} \tag{4.1}$$

where N_1 is the number of turns in the primary coil. The induced emf in the primary coil is nearly equal and opposite to the applied voltage V_1.

[1]For transmission of same amount of power with an increase in voltage level, the current level decreases. Hence, power losses in transmission line (i.e., I^2R losses) decrease.

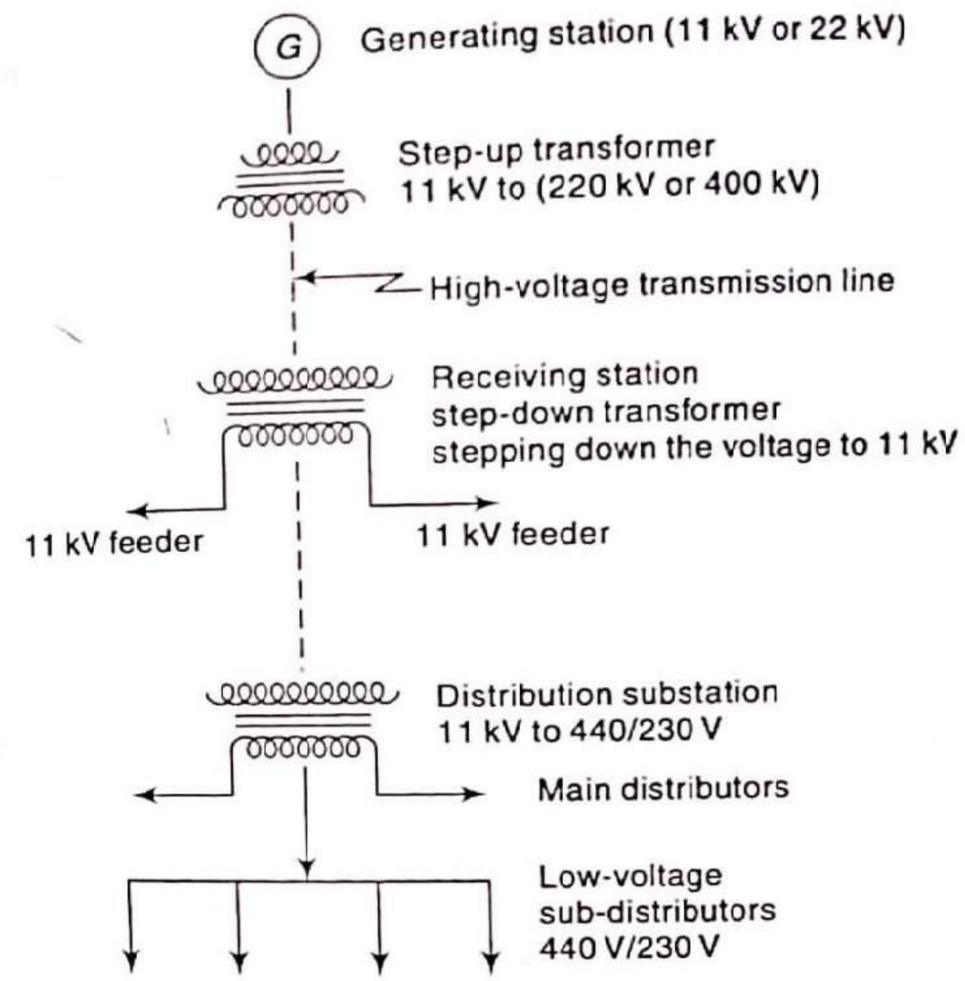

Fig. 4.1 Power system

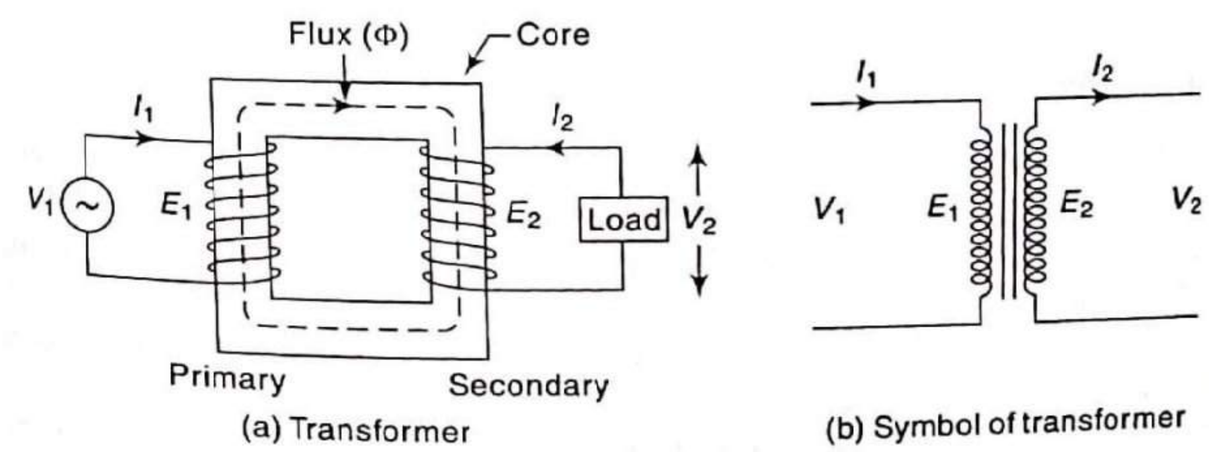

Fig. 4.2 Transformer and symbol of transformer

Assuming leakage flux to be negligible, almost whole flux produced by the primary winding (coil) links with the secondary winding (coil). Hence, an emf e_2 is produced in the secondary coil, which is given by

$$e_2 = -N_2 \frac{d\Phi}{dt} \text{ V} \tag{4.2}$$

where N_2 is the number of turns in the secondary coil. The emf e_1 is called self-induced emf, while the emf e_2 is called mutually induced emf. If the secondary coil is closed through the load, a current I_2 flows through the secondary (coil). Thus, energy is transferred from the primary coil to the secondary coil.

The symbol of a transformer is shown in Fig. 4.2(b). The lines between the two windings represent iron core. If lines are not drawn, then it is air core.

From Eqs (4.1) and (4.2), if N_2 is greater than N_1, then the secondary emf e_2 is higher than the primary emf e_1. Such a transformer is called a step-up transformer. If N_2 is less than N_1, then the secondary emf e_2 is lower than the primary emf e_1. Such a transformer is called a step-down transformer. Thus, the step-up transformer is one that receives electrical energy at one voltage and delivers it at a higher voltage. The step-down transformer is one that receives electrical energy at one voltage and delivers it at a lower voltage.

4.3 Construction Details

A transformer mainly consists of an iron core, primary and secondary windings wound over the core. These are discussed below (see Fig. 4.3).

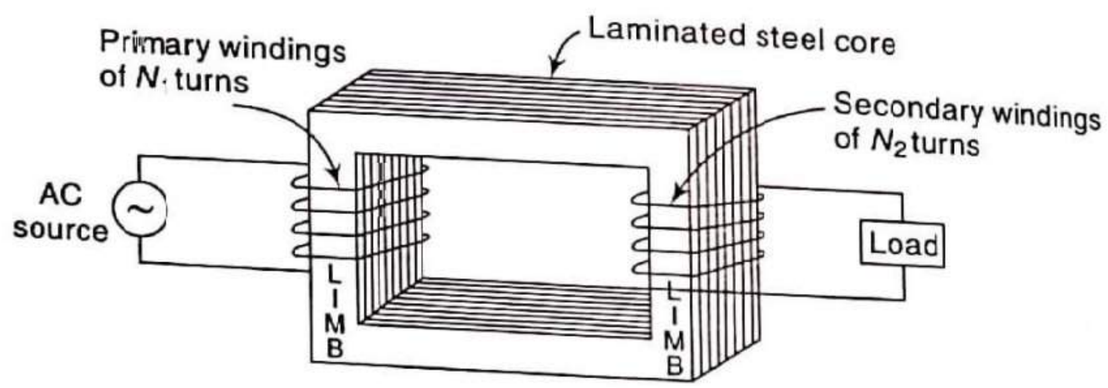

Fig. 4.3 Transformer construction

4.3.1 Core

A core is rectangular in shape and is laminated. It is noted that when a core carries alternating flux, loss of energy takes place in the core due to the effect of hysteresis and eddy current. Therefore, the steel used for manufacturing the core is high-grade silicon steel where hysteresis loss is very low. Such steel is called **soft steel**. Due to the alternating flux, certain currents are induced in the core. They are called **eddy currents**. These currents cause considerable loss of power in the core itself, called **eddy current loss**. To minimize this loss, the core is not manufactured as solid core but as stack of laminations, where successive laminations are insulated by a thin layer of varnish. The varnish provides a very high resistance to the flow of eddy currents and thus, the eddy currents get obviously reduced and the eddy current loss gets minimized. The above two losses (i.e., hysteresis and eddy current losses) are together called **core** or **iron losses**.

4.3.2 Two Windings

One winding is connected to the source of the electrical energy (called primary winding), while the other is connected to the load (called secondary winding). These windings are coils of different number of turns, wound around the two limbs of the core. Each winding is properly insulated from each other as well as the core.

Depending upon the core and winding arrangement, the transformer construction is classified as (i) core-type construction and (ii) shell-type construction. A core-type transformer is shown in Fig. 4.4(a), where on two limbs of the core, the two windings are placed. Many a time, each winding is divided into two equal parts and each limb carries one part of primary and one part of secondary. The two parts of each winding are electrically connected in series. This arrangement gives good magnetic coupling between the primary and secondary windings. In a shell-type transformer, the arrangement is as shown in Fig. 4.4(b). Here the windings are surrounded by the core. The arrangement has three limbs and both the windings are placed over the central limb.

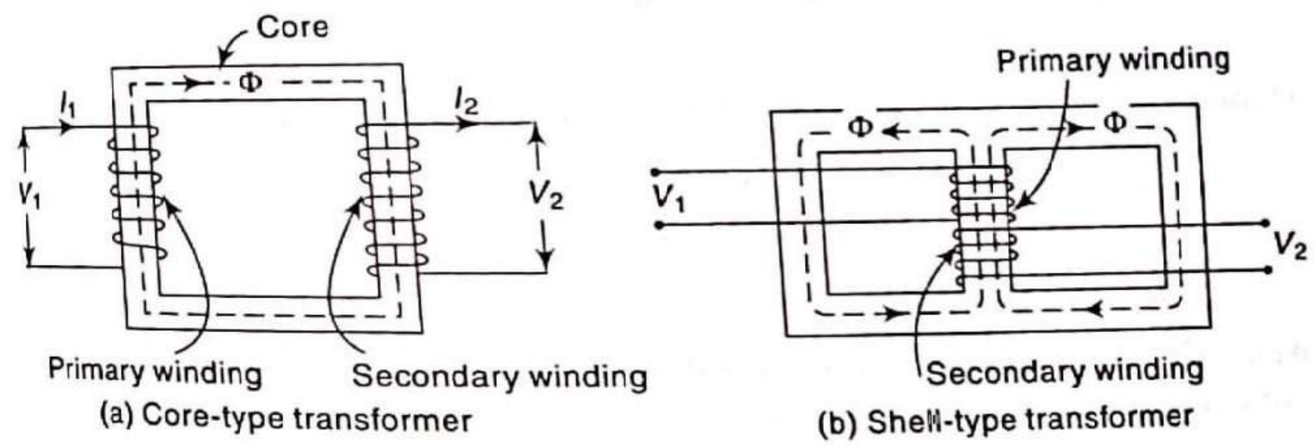

Fig. 4.4 Types of transformer

Table 4.1 compares core-type and shell-type transformers.

Table 4.1 Comparison of core-type and shell-type transformers

Core-type transformer	Shell-type transformer
1. The windings enclose the whole core.	1. The core encloses the windings.
2. Average length of the core is more.	2. Average length of the core is less.
3. Magnetic flux has only one continuous path.	3. Magnetic flux is distributed into two parts.
4. It is more suitable for high-voltage transformers.	4. It is more economical for low voltage transformers.
5. It is easy to repair.	5. It is difficult to repair.

4.4 EMF Equation of a Transformer

Normally, sinusoidal alternating voltage is applied to the primary winding. This produces the flux in the core, which also varies sinusoidally. Let the equation of the sinusoidal alternating flux in the core be

$$\Phi = \Phi_m \sin \omega t \tag{4.3}$$

According to Faraday's law of electromagnetic induction, the self-induced emf in primary winding is given by

$$e_1 = -N_1 \frac{d\Phi}{dt}$$

or $$e_1 = -N_1 \frac{d}{dt}(\Phi_m \sin \omega t)$$

So, $$e_1 = -N_1 \Phi_m \omega \cos \omega t$$

or $$e_1 = N_1 \Phi_m \omega \sin(\omega t - 90°) \quad (4.4)$$

Note: From Eqs (4.3) and (4.4), it may be noted that the self-induced emf (e_1) lags behind the flux (Φ) by 90°.

Comparing Eq. (4.4) with the standard sinusoidal form [i.e., $e = E_m \sin(\omega t \pm \phi)$], maximum value of the induced emf is given by

$$E_M = N_1 \Phi_m \omega$$

Hence, rms value of the induced emf in primary winding is given by

$$E_1 = \frac{E_M}{\sqrt{2}} = \frac{N_1 \Phi_m \omega}{\sqrt{2}} = \frac{N_1 \Phi_m 2\pi f}{\sqrt{2}}$$

So, $$E_1 = 4.44 f N_1 \Phi_m \text{ V} \quad (4.5)$$

where Φ_m is the maximum flux in Wb and f is the supply frequency.

Similarly, rms value of the induced emf in secondary winding is given by

$$E_2 = 4.44 f N_2 \Phi_m \text{ V} \quad (4.6)$$

Equations (4.5) and (4.6) are called emf equations of the transformer.

If B_m = maximum flux density in the magnetic circuit (core) in tesla (T)

and A = area of cross section of the core in sq m (m^2), then

$$B_m = \frac{\Phi_m}{A}$$

The winding with higher number of turns will have a high voltage and is called the high-voltage winding, and the winding with lower number of turns is called the low-voltage winding.

4.5 Transformation Ratio (*K*)

Considering the emf equations of the transformer,

$$E_1 = 4.44 f N_1 \Phi_m \text{ V}$$
$$E_2 = 4.44 f N_2 \Phi_m \text{ V}$$

Dividing, we get

$$\frac{E_2}{E_1} = \frac{N_2}{N_1}$$

The ratio N_2/N_1 is called transformation ratio and is denoted by K.

Thus, $$\frac{E_2}{E_1} = \frac{N_2}{N_1} = K$$

Neglecting small primary and secondary voltage drops,

$$V_1 \cong E_1 \quad \text{and} \quad V_2 \cong E_2$$

So, $$\frac{E_2}{E_1} = \frac{V_2}{V_1} = K$$

In transformer, losses are negligible. Hence, input and output can be approximately equated.

$$V_1 I_1 = V_2 I_2$$

or $$\frac{I_1}{I_2} = \frac{V_2}{V_1} = K$$

Thus, the different forms of the transformation ratio are:

$$\frac{E_2}{E_1} = \frac{N_2}{N_1} = \frac{V_2}{V_1} = \frac{I_1}{I_2} = K$$

For step-up transformers, $N_2 > N_1$ and so, $K > 1$

For step-down transformers, $N_2 < N_1$ and so, $K < 1$

4.6 Actual (Practical) and Ideal Transformers

In a practical transformer, windings are not ideal, and every winding has some resistance (very small value). Hence, there is power loss (copper loss) in the windings. Due to alternating flux, hysteresis loss and eddy current loss take place in the magnetic core. These two losses are together called **core loss.** Also, there is some leakage in flux present near the windings.

An ideal transformer is one that has no losses, i.e., the windings do not possess any resistance. Hence, there is no voltage drop and power loss (copper loss) in the windings. Also there is no leakage of flux, i.e., all the flux produced by the primary winding links with the secondary winding and all the flux produced by the secondary winding links with the primary winding. In other words, an ideal transformer consists of two purely inductive coils wound on a loss-free core with no magnetic leakage. It may, however, be noted that it is impossible to realize such a transformer in practice.

Table 4.2 gives a comparison of practical and ideal transformers.

Table 4.2 Comparison of practical and ideal transformers

Practical transformer	Ideal transformer
1. There are copper and eddy current losses.	1. There is no loss.
2. There is leakage of flux.	2. There is no leakage of flux.
3. Its windings contain ohmic resistance.	3. Its windings consist of purely inductive coils, wound on lossless core.
4. Voltage regulation is never 0%.	4. Voltage regulation is 0% (see Section 4.14).
5. Efficiency is 93–97%.	5. Efficiency is 100%.
6. All constructed transformers are practical transformers.	6. It is impossible to construct an ideal transformer.

Consider an ideal transformer as shown in Fig. 4.5(a), whose secondary winding is open (no-load) and primary winding is connected to source of alternating voltage V_1. This potential difference causes an alternating current to flow in the primary winding, called magnetizing current I_μ. Since the primary coil is purely inductive and there is no output (secondary being open), the magnetizing current I_μ lags V_1 by 90° and it is very small in magnitude. The function of this current is to magnetize the core. The alternating current I_μ produces the alternating flux Φ, which is, at all times, proportional to the current and hence, is in phase with it. This changing flux is linked with both the primary and secondary windings. Therefore, it produces a self-induced emf in the primary winding and a mutually induced emf in the secondary winding. The self-induced emf E_1 is, at every instant, equal to and in opposition to V_1. It is also known as counter emf or back emf of the primary winding. Similarly, in the secondary winding, mutually induced emf E_2 is produced. This emf is antiphase with V_1 and its magnitude is proportional to the secondary number of turns. Figure 4.5(b) shows the phasor diagram of an ideal transformer with no-load.

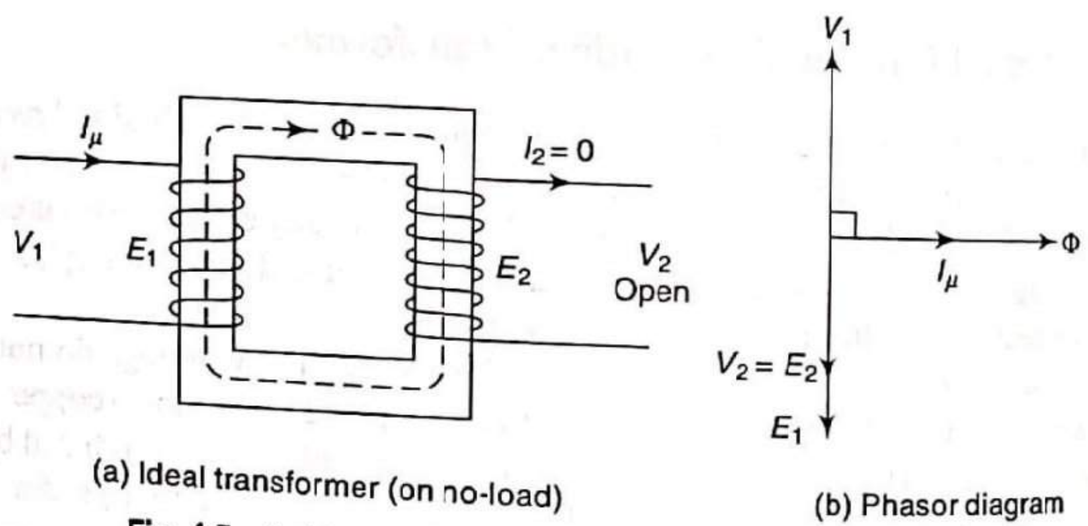

Fig. 4.5 Ideal transformer and phasor diagram (on no-load)

The power input to the transformer is $V_1 I_\mu \cos\phi$, i.e., $V_1 I_\mu \cos 90°$ or zero. This is because on no-load, output power is zero and for an ideal transformer, there are no losses and thus, input power is zero.

By using the following steps, phasor diagram can be drawn:

Step I: Take magnetizing current I_μ as reference phasor.

Step II: In same phase, draw alternating flux phasor (Φ). The alternating current I_μ produces the alternating flux Φ, and hence, both quantities are in phase.

Step III: Draw phasor E_1, lagging behind flux phasor (Φ) by 90° [see Section 4.4].

Step IV: Draw phasor V_1, equal and antiphase to E_1. [For ideal winding (coil), by Lenz's law, applied voltage (V_1) is equal and opposite to self-induced emf (E_1)].

Step V: Draw phasor E_2, in phase with E_1. Depending upon the type of transformer, i.e., step up or step down, E_2 may be greater than or less than E_1.

Step VI: Draw phasor V_2 in phase with E_2. V_2 is equal in magnitude to E_2.

4.7 Transformer Losses

Since a transformer is a static device, it has no rotational losses. The main losses that occur in a transformer are copper loss and iron loss.

Copper loss (W_{cu})

In a transformer, windings are not ideal, and every winding has some resistance. The loss that takes place due to winding resistance is called **copper loss** (as windings are made of copper).

If R_1 is resistance of the primary winding and R_2 is that of the secondary winding, then

$$\text{primary copper loss} = I_1^2 R_1 \text{ W} \quad \text{(i)}$$

$$\text{secondary copper loss} = I_2^2 R_2 \text{ W} \quad \text{(ii)}$$

So, $$\text{total copper loss}, W_{cu} = (I_1^2 R_1 + I_2^2 R_2) \text{ W} \quad \text{(iii)}$$

From the above equations, it is clear that copper loss is a variable loss and varies with square of the current or output. Thus, copper loss at half load is one-fourth of that at full load. At no load, copper loss is negligible. Copper loss can be calculated by conducting short-circuit test on transformer.

Iron loss or core loss (W_i)

Due to applied alternating voltage, an alternating flux is produced in the core. When any magnetic material is placed in alternating magnetic field, the hysteresis loss and eddy current loss take place in the magnetic material. Thus, the hysteresis loss and eddy current loss take place inside the magnetic core of a transformer. These two losses are together called core loss. Since the core is made of iron, it is also termed as iron loss. The core loss is proportional to the applied voltage[2]. Normally, the applied voltage is constant, so the core loss remains constant for all loads. Core loss (or iron loss) can be calculated by conducting open-circuit test (oc test) on transformer.

Hysteresis loss Since the supply to the primary is alternating, the core gets alternately magnetized and demagnetized causing loss of energy (see Section C.4.2, Appendix C). This loss is given by

$$W_h = \eta B_{max}^{1.6} f V \text{ W}$$

where W_h = hysteresis loss in W

B_{max} = maximum value of flux density in tesla (T)

f = frequency of magnetic reversal in hertz (Hz)

η = Steinmetz constant

V = volume of the material in m^3

[2]The core loss is due to the alternating flux in the core. The magnitude of alternating flux set in the core is directly proportional to the applied voltage. So, core loss is proportional to the applied voltage.

This loss can be minimized by selecting a material for the core that has low hysteresis coefficient, e.g., silicon steel.

Eddy current loss This loss is due to eddy current induced in the transformer core and is seen in the form of heat in the core (see Section C.5.9, Appendix C). This loss is given by

$$W_e = K B_{max}^2 f^2 t^2 \text{ W}$$

where t is thickness of the lamination. This loss can be minimized by using laminated core.

4.8 Transformer Parameters

In this section, we will discuss parameters of a transformer, namely winding resistance, leakage reactance, and impedance.

4.8.1 Winding Resistance

An ideal transformer is supposed to possess no resistance, but in actual transformer, there is always some resistance of primary and secondary windings. In Fig. 4.6, a transformer is shown whose primary and secondary windings have resistances of R_1 and R_2 ohm respectively. The resistances have been shown external to the windings.

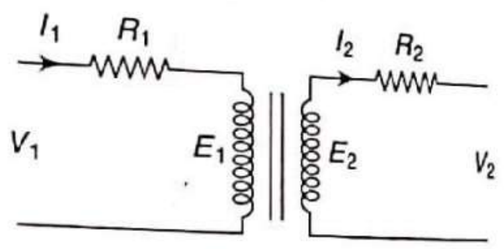

Fig. 4.6 Winding resistance

The resistances of the two windings can be transferred to either of the two windings. The advantage of concentrating both the resistances in one winding is that it makes calculations very simple and easy because one has then to work in one winding only.

It can be proved that a resistance of R_2 in secondary is equivalent to R_2/K^2 in primary[3]. The value R_2/K^2 will be denoted by R_2'—*the equivalent secondary resistance as referred to primary*. In Fig. 4.7(a), secondary resistance has been transferred to primary side leaving secondary circuit without resistance. The resistance $R_1 + R_2' = R_1 + (R_2/K^2)$ is known as the *equivalent resistance of the transformer as referred to primary* and may be denoted by R_{01}.

Thus, $R_{01} = R_1 + R_2' = R_1 + (R_2/K^2)$

Similarly, it can be proved that a resistance of R_1 in primary is equivalent to K^2R_1 in secondary. The value K^2R_1 will be denoted by R_1'—*the equivalent primary resistance as referred to secondary*. In Fig. 4.7(b), primary resistance has been transferred to secondary side leaving primary circuit without resistance. The resistance $R_2 + R_1' = R_2 + K^2R_1$ is known as the *equivalent resistance of the transformer as referred to secondary* and may be denoted by R_{02}.

Thus, $R_{02} = R_2 + R_1' = R_1 + K^2R_1$

[3]The copper loss due to resistance R_2 is equal to $I_2^2R_2$. When resistance R_2 is transferred to primary side, its value changes. Let it be R_2'. Now, copper loss on primary side will be $I_1^2R_2'$. Theoretically the above two copper losses must be equal. Thus, $I_2^2R_2 = I_1^2R_2'$ So, $R_2' = R_2/K^2$.

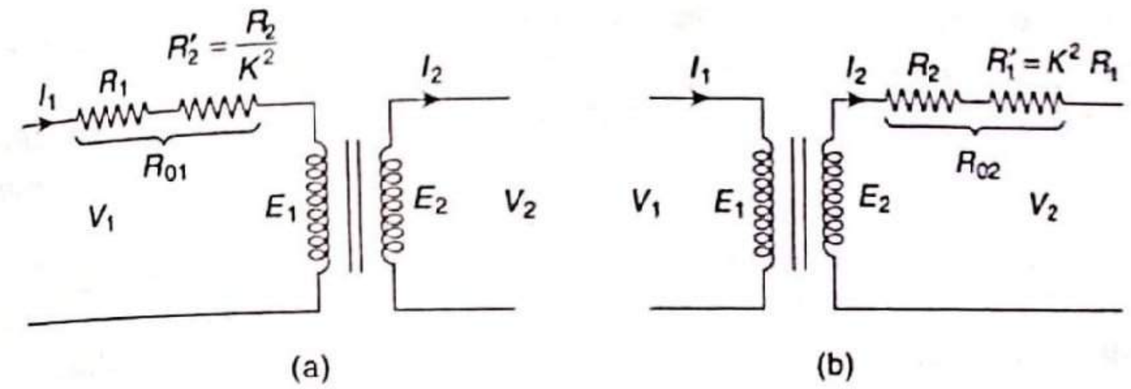

Fig. 4.7 Shifting of winding resistance

The following points may be noted while concentrating the resistances in one winding:

1. When shifting any primary resistance to the secondary winding, multiply it by K^2.
2. When shifting any secondary resistance to the primary winding, divide it by K^2.
3. Concentrating both the resistances in one winding makes calculations very simple and easy. The copper loss from individual resistances (see Fig. 4.6) can be calculated as $W_{cu} = I_1^2R_1 + I_2^2R_2$ W.
4. If resistances are concentrated on primary side [see. Fig. 4.7(a)], then the copper loss can be calculated as $W_{cu} = I_1^2R_{01}$ W.
5. If resistances are concentrated on secondary side [see.Fig. 4.7(b)], then the copper loss can be calculated as $W_{cu} = I_2^2R_{02}$ W.

4.8.2 Leakage Reactance

In an ideal transformer, it is assumed that all the flux produced by the primary winding links both the primary and secondary windings. But in practice, it is impossible to realize this condition. However, it is found that all the flux linked with primary does not link with secondary. As shown in Fig. 4.8(a), some part of primary flux, Φ_{L1}, completes its path by passing through air rather than around the core. The flux Φ_{L1} is called primary leakage flux, which links to primary winding and does not link to secondary winding. Similarly, Φ_{L2} is called secondary leakage flux, which link to secondary winding and does not link to primary winding. The flux Φ_{L1} is in time phase with I_1 and induces an emf E_{L1} in primary

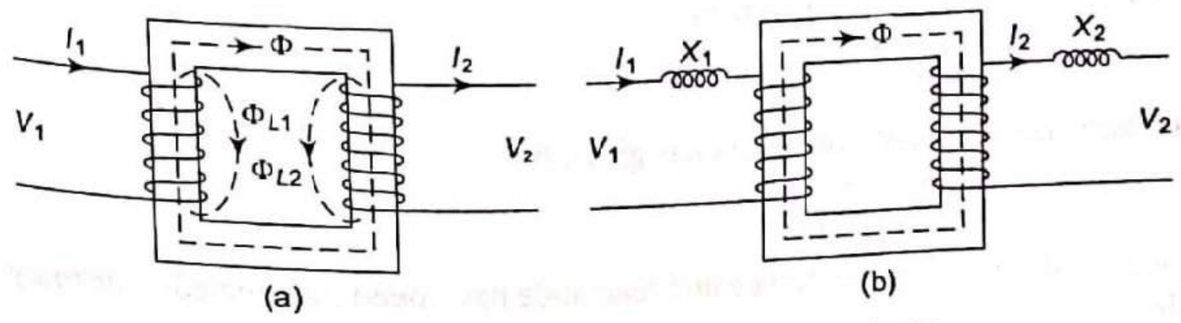

Fig. 4.8 Magnetic leakage and leakage reactance

but not in secondary. Similarly, the flux Φ_{L2} is in time phase with I_2 and induces an emf E_{L2} in secondary but not in primary.

Thus, each leakage flux links one winding only and it is caused by the current in that winding alone. The flux which passes completely through the core and links both windings is called main or mutual flux and is shown by Φ.

It should be noted that the induced voltages E_{L1} and E_{L2} due to leakage fluxes Φ_{L1} and Φ_{L2} are different from induced voltages E_1 and E_2 caused by the main flux Φ. The leakage flux linking with each winding produces a self-induced emf in that winding. Hence, in effect, it is equivalent to a small inductive coil in series with each winding such that voltage drop in each series coil is equal to that produced by leakage flux [refer to Fig. 4.8(b)]. Thus,

$$E_{L1} = I_1X_1 \quad \text{and} \quad E_{L2} = I_2X_2$$

The terms X_1 and X_2 are known as primary and secondary leakage reactances respectively. It should be noted that X_1 and X_2 are fictitious quantities introduced as a convenience in representing the effects of primary and secondary leakage fluxes.

4.8.3 Impedance

As discussed in Section 4.6, in practical transformer, windings are not ideal, and every winding has some resistance (very small value). In Fig. 4.9, a transformer is shown whose primary and secondary windings have resistances of R_1 and R_2 ohm respectively. The resistances have been shown external to the windings. Also in practical transformer, there is some leakage flux present near the primary and secondary windings. In Fig. 4.9, the effects of primary and secondary leakage fluxes are represented by the reactances X_1 and X_2 respectively.

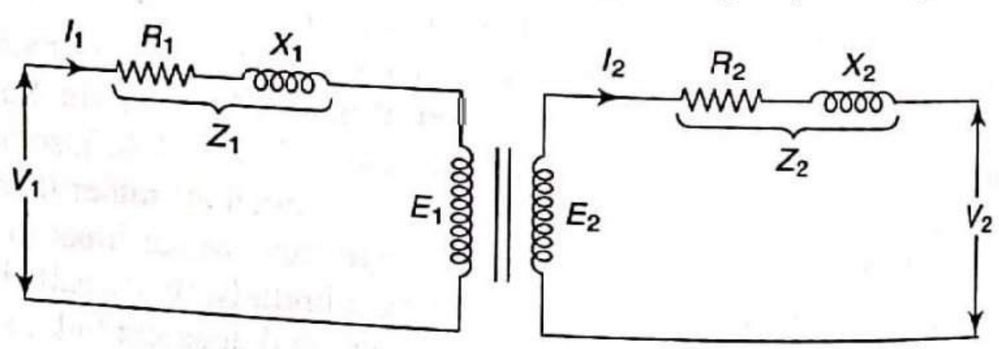

Fig. 4.9 Impedance

The primary impedance is given by

$$Z_1 = \sqrt{R_1^2 + X_1^2} \ \Omega$$

Similarly, the secondary impedance is given by

$$Z_2 = \sqrt{R_2^2 + X_2^2} \ \Omega$$

In Fig. 4.10, secondary resistance and reactance have been transferred to primary side.

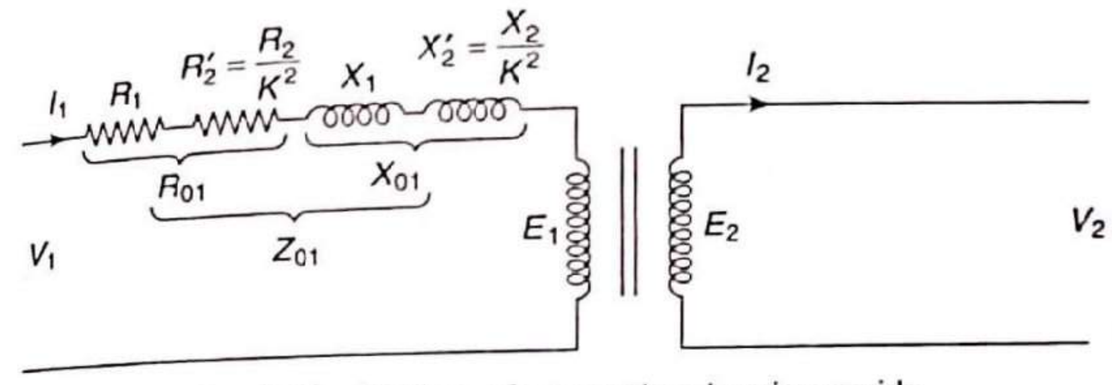

Fig. 4.10 Shifting of parameters to primary side

The equivalent resistance of the transformer as referred to primary is given by

$$R_{01} = R_1 + R_2' = R_1 + (R_2/K^2)$$

Similarly, the equivalent reactance of the transformer as referred to primary is given by

$$X_{01} = X_1 + X_2' = X_1 + (X_2/K^2)$$

The equivalent impedance of the transformer as referred to primary is given by

$$Z_{01} = \sqrt{R_{01}^2 + X_{01}^2} \ \Omega$$

In Fig. 4.11, primary resistance and reactance have been transferred to secondary side.

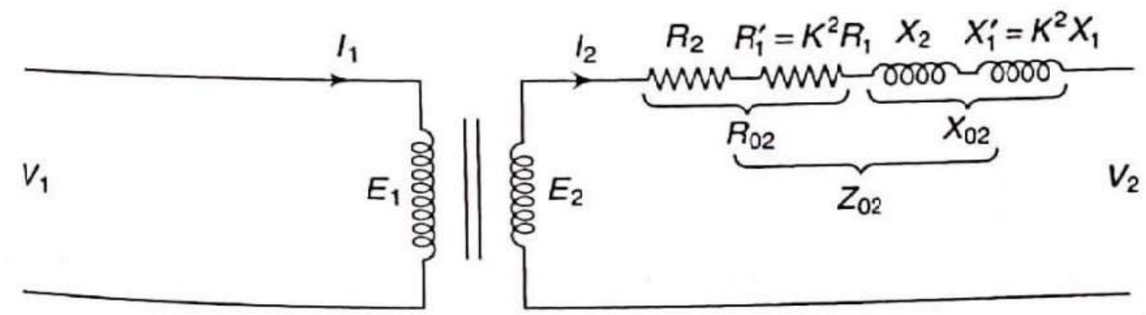

Fig. 4.11 Shifting of parameters to secondary side

The equivalent resistance of the transformer as referred to secondary is given by

$$R_{02} = R_2 + R_1' = R_2 + K^2R_1$$

Similarly the equivalent reactance of the transformer as referred to secondary is given by

$$X_{02} = X_2 + X_1' = X_2 + K^2X_1$$

The equivalent impedance of the transformer as referred to secondary is given by

$$Z_{02} = \sqrt{R_{02}^2 + X_{02}^2} \ \Omega$$

4.9 Transformer on No-Load

A transformer is on no-load when its secondary winding is open-circuited, i.e., secondary current I_2 is zero [refer to Fig. 4.12(a)]. Under such a condition, the primary input current has to supply: (i) iron loss in the core (i.e., hysteresis and

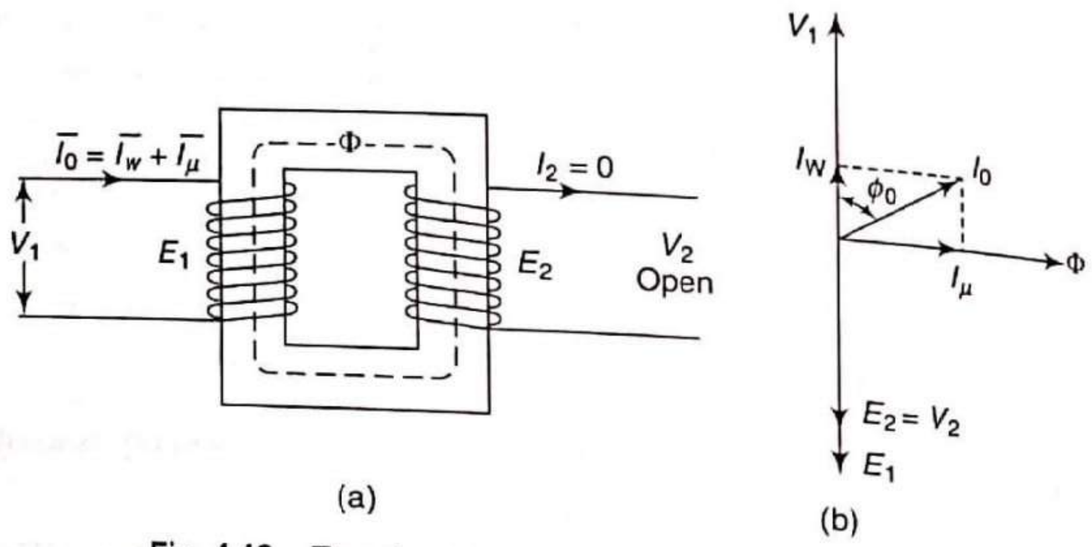

Fig. 4.12 Transformer and phasor diagram (on no-load)

eddy current loss) and (ii) a very small amount of copper loss in the primary winding only (the secondary winding being open involves no copper loss). The primary winding is not a pure winding and has some winding resistance. Hence, the no-load primary input current (I_0) is not at 90° behind V_1 but lags it by an angle $\phi_0 < 90°$.

Now, the primary current (I_0) under no-load condition can be split up into two components [see Fig. 4.12(b)].

(i) Iron loss (or active or working) component (I_W) is in phase with V_1, which supplies the iron losses.
Thus, $I_W = I_0 \cos \phi_0$

(ii) Magnetizing component (I_μ) in quadrature with V_1.
Thus, $I_\mu = I_0 \sin \phi_0$

This component is wattless, and its function is to sustain (or maintain) the alternating flux in the core. The current I_0 is vector sum of I_W and I_μ, i.e.,

Thus, from the phasor diagram, $I_0 = \sqrt{I_W^2 + I_\mu^2}$

$$I_W = I_0 \cos \phi_0$$
$$I_\mu = I_0 \sin \phi_0$$

No-load power input is given by

$$W_0 = V_1 I_0 \cos \phi_0 \text{ W}$$

where $\cos \phi_0$ is power factor at no load. As losses are very small, input power is also very small. Thus, input current I_0 is very small. As I_0 is very small, the no-load primary copper loss is negligibly small, which means that no-load primary input is practically equal to the iron loss in the transformer.

So, Iron loss, $W_i = V_1 I_0 \cos \phi_0$ W

Phasor diagram

Figure 4.12(b) shows the phasor diagram. Since the flux Φ is common to both the windings, Φ is chosen as reference. The self-induced emf E_1 lags behind the flux Φ by 90° (see Section 4.4). Hence, the phasor E_1 lags behind the flux by

90°. The phasor E_2 is in phase with E_1. The magnetizing current I_μ is drawn in phase with the flux Φ. The applied voltage V_1 is drawn equal and opposite to E_1. The active component I_W is drawn in phase with V_1. The phasor sum of I_W and I_μ gives the no-load current I_0. The angle between V_1 and I_0 is marked as ϕ_0 (no-load power factor angle).

4.10 Transformer on Load

When transformer is on no-load (i.e., when its secondary winding is open circuited and secondary current I_2 is zero), primary winding draws a very small current I_0 and Φ is the main primary flux in the core [see Fig. 4.13(a)].

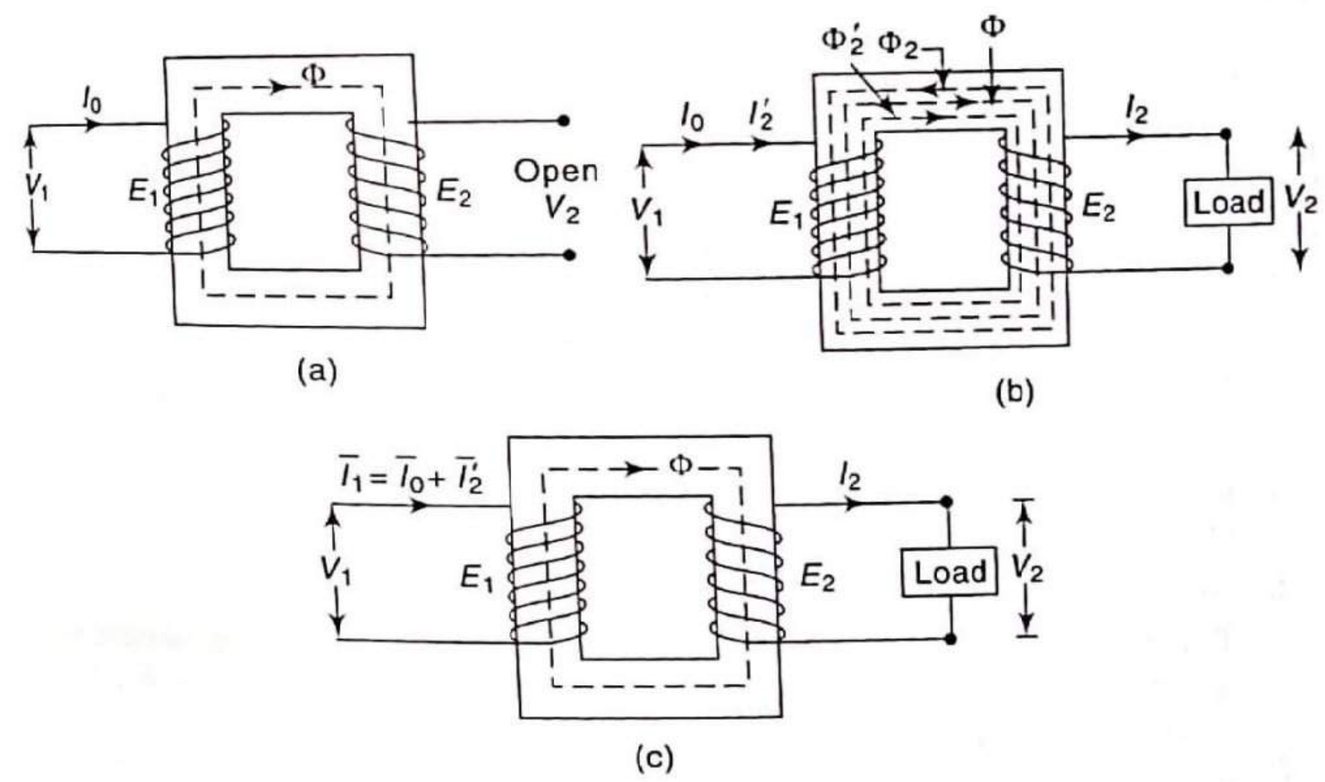

Fig. 4.13 Transformer on load

When secondary winding is loaded, the secondary current I_2 is set up. The magnitude and phase of I_2 with respect to V_2 is determined by the characteristics of the load. The secondary current set up its own flux Φ_2, which is in opposition to main primary flux Φ. (Basically flux Φ_2 is due to mmf $N_2 I_2$.) The opposing secondary flux Φ_2 weakens the primary flux Φ momentarily. Hence, primary back emf E_1 tends to be reduced and for a moment, V_1 becomes greater than E_1. Therefore, additional current flows through primary winding [see. Fig. 4.13(b)].

Let the additional primary current be I_2' [see Fig. 4.13(b)]. It is known as load component of primary current. This current is antiphase with I_2. This current set up its own flux Φ_2', which is in opposition to Φ_2 and is equal to it in magnitude. (Basically flux Φ_2' is due to mmf $N_1 I_2'$.) Hence, the two cancel each other out, and we find that the magnetic effect of secondary current I_2 is immediately neutralized by the additional current I_2'. Hence, whatever the load condition, the net flux passing through the core is approximately the same as at no-load. Therefore, the core loss is also practically the same under all load conditions.

As $\Phi_2 = \Phi_2'$, $\quad N_2 I_2 = N_1 I_2'$,

So, $\quad I_2' = \dfrac{N_2}{N_1} \times I_2 = KI_2$

Hence, when transformer is on load, the primary winding has two currents in it—one is I_0 and the other is I_2', which is antiphase with I_2 and K times in magnitude. The total primary current is the phasor sum of I_0 and I_2'.

4.10.1 Phasor Diagram: Without Considering Winding Resistance and Magnetic Leakage

Neglecting small primary and secondary voltage drops due to winding resistance and leakage reactance, we get

On primary side, $E_1 = V_1$, antiphase with each other

On secondary side, $V_2 = E_2$

Case (i) When load is resistive (unity power factor)

Figure 4.14(a) shows the phasor diagram for resistive load (assuming $K = 1$). Steps for drawing the phasor diagram are as follows:

1. Take flux Φ as reference phasor.
2. Draw $\overline{E}_1$, which lags behind the flux Φ by 90°.
3. Draw $\overline{E}_2$, which is in phase with $\overline{E}_1$. As $K = 1$, E_2 is equal to E_1. $\overline{V}_2$ is equal to $\overline{E}_2$ both in magnitude and phase.
4. Draw $\overline{V}_1$, equal and opposite to $\overline{E}_1$.
5. Draw phasor $\overline{I}_0$, which lags $\overline{V}_1$ by an angle $\phi_0 < 90°$.
6. Draw phasor $\overline{I}_2$ in phase with $\overline{V}_2$ (as load is resistive).
7. The secondary current I_2 causes primary current I_2', which is antiphase with it and equal to it in magnitude (since $K = 1$). Therefore, draw the phasor $\overline{I}_2'$ in antiphase with $\overline{I}_2$ and equal in magnitude.
8. By law of parallelogram, find the resultant of $\overline{I}_0$ and $\overline{I}_2'$. This resultant is the total primary current $\overline{I}_1$.
9. Mark the primary phase angle ϕ_1 (angle between $\overline{V}_1$ and $\overline{I}_1$). Similarly, mark the secondary phase angle ϕ_2 (angle between $\overline{V}_2$ and $\overline{I}_2$).

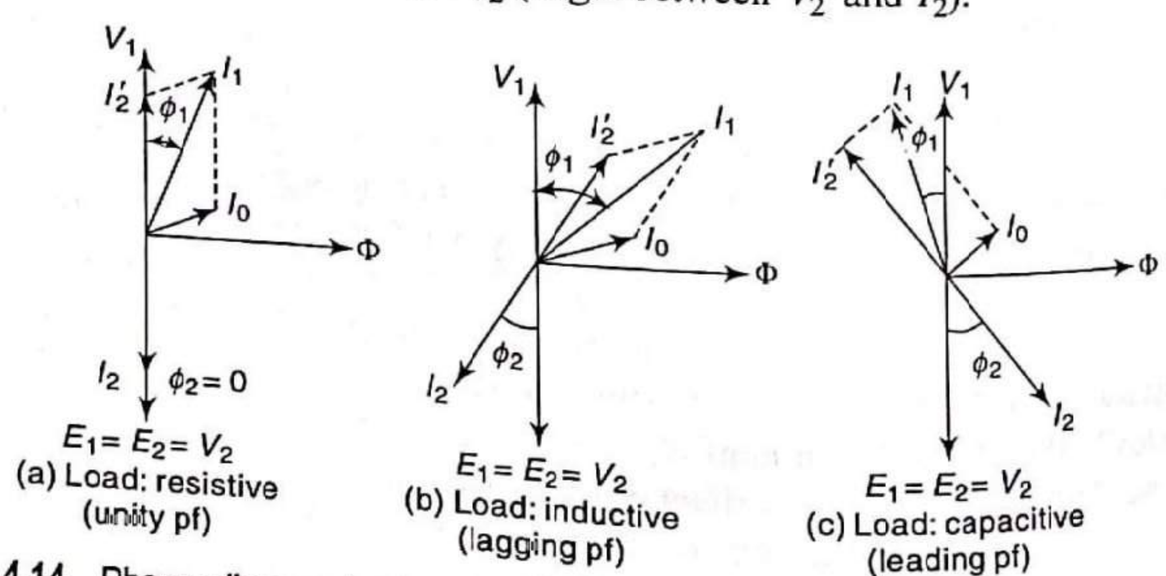

Fig. 4.14 Phasor diagram (on load), without considering winding resistance and magnetic leakage

Case (ii) When load is inductive (lagging power factor)

By using the same steps as in case (i), the phasor diagram can be drawn. Only modification required is that current I_2 lags V_2 by an angle $\phi_2 < 90°$ (as load is inductive). Figure 4.14(b) shows the phasor diagram for inductive load (assuming $K = 1$).

Case (iii) When load is capacitive (leading power factor)

By using the same steps as in case (i), the phasor diagram can be drawn. Only modification required is that current I_2 leads V_2 by an angle $\phi_2 < 90°$ (as load is capacitive). Figure 4.14(c) shows the phasor diagram for capacitive load (assuming $K = 1$).

4.10.2 Phasor Diagram: Considering Winding Resistance and Magnetic Leakage

Consider a transformer with winding resistance and leakage reactance as shown in Fig. 4.15.

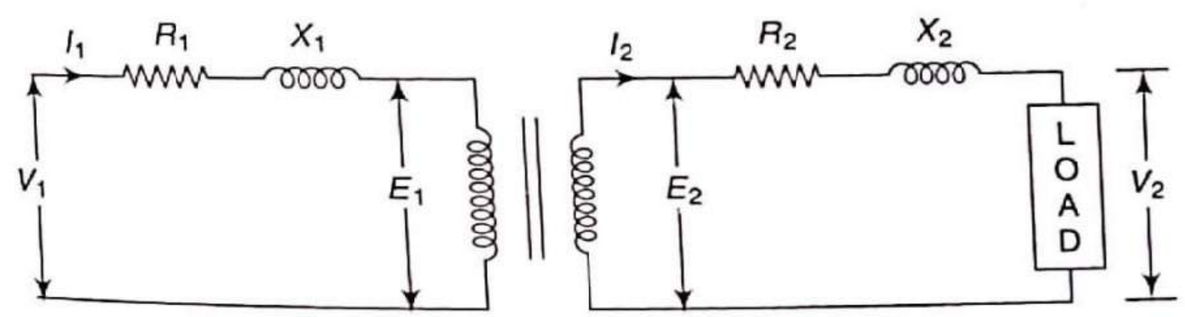

Fig. 4.15 Transformer with parameters

Writing vector equations for primary and secondary sides,

$$\overline{V}_1 = \overline{I}_1\overline{R}_1 + \overline{I}_1\overline{X}_1 + (-\overline{E}_1)$$

and $$\overline{E}_2 = \overline{I}_2\overline{R}_2 + \overline{I}_2\overline{X}_2 + \overline{V}_2$$

where $$\overline{I}_1 = \overline{I}_0 + \overline{I}_2'$$

The phasor diagram of a transformer on load condition is drawn with the help of the above expressions.

Steps for drawing the phasor diagram are as follows:

1. First draw $\overline{V}_2$ and then $\overline{I}_2$. Phase angle between $\overline{I}_2$ and $\overline{V}_2$ will depend on the type of load.
2. To $\overline{V}_2$, add resistive drop $\overline{I}_2\overline{R}_2$ parallel to $\overline{I}_2$ and inductive drop $\overline{I}_2\overline{X}_2$ leading $\overline{I}_2$ ($\overline{I}_2\overline{R}_2$) by 90° such that
$$\overline{E}_2 = \overline{I}_2\overline{R}_2 + \overline{I}_2\overline{X}_2 + \overline{V}_2$$
3. Draw $\overline{E}_1$ in the same phase of $\overline{E}_2$.
4. Draw $-\overline{E}_1$ equal and opposite to $\overline{E}_1$.
5. For drawing $\overline{I}_1$, first draw $\overline{I}_0$ and $\overline{I}_2'$ such that
$$\overline{I}_1 = \overline{I}_0 + \overline{I}_2'$$

6. Now add $\bar{I}_0$ and $\bar{I}_2'$ using parallelogram law of vector addition such that
$$\bar{I}_1 = \bar{I}_0 + \bar{I}_2'$$
7. To $-\bar{E}_1$, add resistive drop $\bar{I}_1\bar{R}_1$, parallel to $\bar{I}_1$ and inductive drop $\bar{I}_1\bar{X}_1$ leading $\bar{I}_1(\bar{I}_1\bar{R}_1)$ by 90° such that
$$\bar{V}_1 = \bar{I}_1\bar{R}_1 + \bar{I}_1\bar{X}_1 + (-\bar{E}_1)$$
8. Draw flux Φ such that Φ leads $\bar{E}_1$ and $\bar{E}_2$ by 90°.

Case (i) When load is resistive (unity power factor)
Figure 4.16(a) shows the phasor diagram for resistive load (assuming $K = 1$).

Case (ii) When load is inductive (lagging power factor)
Figure 4.16(b) shows the phasor diagram for inductive load (assuming $K = 1$).

Case (iii) When load is capacitive (leading power factor)
Figure 4.16(c) shows the phasor diagram for capacitive load (assuming $K = 1$).

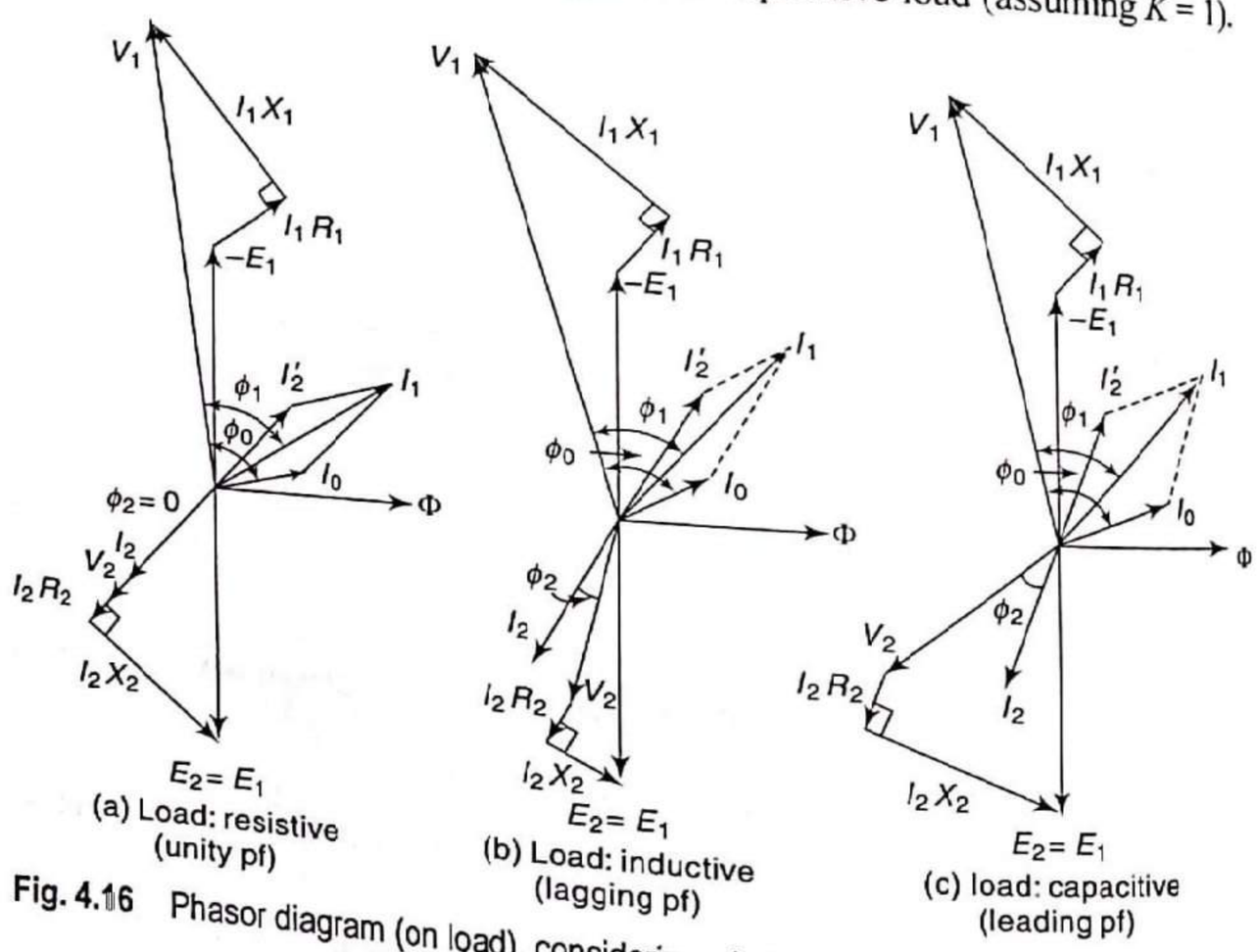

Fig. 4.16 Phasor diagram (on load), considering winding resistance and magnetic leakage

4.11 Transformer Ratings

Two types of ratings are used for transformer—voltage rating and kVA rating.

Voltage rating

It indicates the normal or rated primary and secondary voltages. For example, for the voltage rating given as 200/400 V,

primary rated voltage, $E_1 \cong V_1 = 200$ V

secondary rated voltage, $E_2 \cong V_2 = 400$ V

kVA rating

During operation of a transformer, power losses take place in the windings and core of the transformer. These power losses appear in the form of heat, which increases the temperature of the device. This temperature must be maintained below a certain limiting value as it is always harmful to the transformer.

The output of a transformer is expressed in kVA (i.e., kilo-volt ampere). The rated transformer output is limited by heating and hence losses in the transformer, i.e., copper loss and core loss. These losses depend upon the voltage and current, and are almost unaffected by the power factor of the load. Therefore, the transformer rated output is expressed in kVA and not in kW.

At a zero power factor also (i.e., delivering zero power), a transformer can be made to operate at rated kVA.

The kVA rating is given by

$$\text{kVA rating} = \frac{E_1(I_1)_{FL}}{1000} = \frac{E_2(I_2)_{FL}}{1000}$$

where $(I_1)_{FL}$ = full-load primary current
$(I_2)_{FL}$ = full-load secondary current

From kVA rating, we can calculate full-load currents on primary and secondary windings. This is the safe maximum current limit, which may keep temperature rise below its limiting value. So,

$$(I_1)_{FL} = \frac{\text{kVA rating} \times 1000}{E_1}$$

$$(I_2)_{FL} = \frac{\text{kVA rating} \times 1000}{E_2}$$

The full-load primary and secondary currents indicate the safe maximum values of currents that the transformer windings can carry. These values indicate how much maximum load can be connected to a given transformer of a specified kVA rating.

Example 4.1 A 50 kVA, single-phase transformer has 600 turns on the primary winding and 40 turns on the secondary winding. The primary winding is connected to a 2.2 kV, 50 Hz supply. Determine (i) secondary voltage at no load and (ii) primary and secondary currents at full load.

Solution

(i) $$\frac{E_2}{E_1} = \frac{N_2}{N_1}$$

So, $$E_2 = \frac{N_2}{N_1} \times E_1 = \frac{40}{600} \times 2200 = 146.67 \text{ V}$$

(ii) $(I_1)_{FL} = \dfrac{\text{kVA rating} \times 1000}{E_1}$

$= \dfrac{50 \times 1000}{2200}$

$= 22.73$ A

$(I_2)_{FL} = \dfrac{\text{kVA rating} \times 1000}{E_2}$

$= \dfrac{50 \times 1000}{146.67}$

$= 340.9$ A

Example 4.2 A 80 kVA, 3200/400 V, single-phase, 50 Hz, transformer has 111 turns on the secondary winding. Calculate (i) number of turns on primary winding, (ii) secondary full-load current, and (iii) cross-sectional area of the core, if the maximum flux density is 1.2 tesla.

Solution

(i) We know that

$$\frac{N_2}{N_1} = \frac{E_2}{E_1}$$

So, $N_1 = \dfrac{E_1}{E_2} \times N_2 = \dfrac{3200}{400} \times 111 = 888$ turns

(ii) $(I_2)_{FL} = \dfrac{\text{kVA rating} \times 1000}{E_2}$

$= \dfrac{80 \times 1000}{400}$

$= 200$ A

(iii) The emf equation of a transformer is:

$E_2 = 4.44 f N_2 \Phi_m$ V

or $E_2 = 4.44 f N_2 B_m A$ V $\quad (\because \Phi_m = B_m \times A)$

where B_m = maximum flux density in Wb/m^2 or tesla

A = cross-sectional area of the core in m^2

So, $400 = 4.44 \times 50 \times 111 \times 1.2 \times A$

or cross-sectional area, $A = 0.0135$ m^2

Example 4.3 The required no-load ratio in a single-phase 50 Hz, core-type transformer is 6000/250 V. Find the number of turns in each winding if the peak value of flux in the core is to be about 0.06 Wb.

Solution

No-load voltage ratio $= \dfrac{6000}{250}$, i.e., $E_1 = 6000$ V and $E_2 = 250$ V

Peak value of the flux, $\Phi_m = 0.06$ Wb

The emf equation of the transformer is given by

$E_1 = 4.44 f N_1 \Phi_m$ V

or $6000 = 4.44 \times 50 \times N_1 \times 0.06$

Hence, $N_1 = 450.45$ turns

Since the number of turns in each winding should be a whole number,

$N_1 = 451$ turns

Similarly, emf equation of a transformer is given by

$E_2 = 4.44 f N_2 \Phi_m$ V

or $250 = 4.44 \times 50 \times N_2 \times 0.06$

Hence, $N_2 = 18.768$ turns or 19 turns

Example 4.4 A 25 kVA transformer has 500 turns on the primary winding and 50 turns on the secondary winding. The primary winding is connected to 3000 V, 50 Hz supply. Find the full-load primary and secondary currents, the secondary emf and the maximum flux in the core. Neglect leakage drop and no-load primary current.

Solution

Transformation ratio, $K = \dfrac{N_2}{N_1} = \dfrac{50}{500} = 0.1$

Full-load primary current,

$(I_1)_{FL} = \dfrac{\text{kVA rating} \times 1000}{E_1}$

$= \dfrac{25 \times 1000}{3000}$

$= 8.33$ A

Now, $\dfrac{(I_1)_{FL}}{(I_2)_{FL}} = K$

So, $(I_2)_{FL} = \dfrac{(I_1)_{fl}}{K} = \dfrac{8.33}{0.1} = 83.3$ A

Now, $\dfrac{E_2}{E_1} = K$

So, $E_2 = KE_1 = 0.1 \times 3000 = 300$ V

The emf equation of a transformer is given by

$$E_1 = 4.44\, f N_1 \Phi_m \text{ V}$$

So, we have $3000 = 4.44 \times 50 \times 500 \times \Phi_m$

or $\Phi_m = 0.027$ Wb

$= 27$ mWb

Example 4.5 A single-phase transformer has primary voltage of 230 V. No-load primary current is 5 A. No-load pf is 0.25. Number of primary turns is 200 and frequency is 50 Hz. Calculate (i) maximum value of flux in the core, (ii) core loss, and (iii) magnetizing current.

Solution

Given: $E_1 \approx V_1 = 230$ V

$I_0 = 5$ A

$\cos \phi_0 = 0.25$

$N_1 = 200$ turns

$f = 50$ Hz

(i) The emf equation of a transformer is given by

$$E_1 = 4.44 f N_1 \Phi_m \text{ V}$$

So, $230 = 4.44 \times 50 \times 200 \times \Phi_m$

which gives $\Phi_m = 5.18$ mWb

(ii) At no load, copper loss is negligible.

So, input power = iron loss (W_i)

Thus, core loss, $W_i = V_1 I_0 \cos \phi_0$

$= 230 \times 5 \times 0.25 = 287.5$ W

(iii) Magnetizing current,

$I_\mu = I_0 \sin \phi_0$

$= 5 \times 0.97$ $\quad (\because \cos \phi_0 = 0.25 \text{ and } \sin \phi_0 = 0.97)$

$= 4.85$ A

Example 4.6 A transformer has turn ratio $N_1 : N_2$ of 4. If a 50 Ω resistance is connected across the secondary, what is the resistance referred to the primary?

Solution

$$\text{Turns ratio} = \frac{N_1}{N_2} = 4$$

So, $$K = \frac{N_2}{N_1} = \frac{1}{4}$$

A 50 Ω resistance is connected across the secondary.

When 50 Ω resistance is shifted from secondary to primary, we have to divide it by K^2.

Hence, resistance referred to the primary $= \dfrac{50}{K^2} = \dfrac{50}{(1/4)^2} = 800\ \Omega$

Example 4.7 A resistance connected across the secondary of an ideal transformer has a value of 800 ohm as referred to the primary. The same resistance when connected across the primary has a value of 3.125 ohm as referred to the secondary. Find the turns ratio of the transformer.

Solution

Let the value of resistance is $R\ \Omega$.

Case (i) When the resistance is connected to secondary

When the resistance is transferred to primary, its value is given as 800 Ω, i.e.,

$$\frac{R}{K^2} = 800 \qquad \text{(i)}$$

Case (ii) When the same resistance is connected to primary

When the resistance is transferred to secondary, its value is given as 3.125 Ω, i.e.,

$$K^2 R = 3.125 \qquad \text{(ii)}$$

From Eqs (i) and (ii),

$K = 0.25$

Example 4.8 A 30 kVA, 2400/120 V, 50 Hz, transformer has a high-voltage winding resistance of 0.1 Ω and a leakage reactance of 0.22 Ω. The low-voltage winding resistance is 0.035 Ω and the leakage reactance is 0.012 Ω. Calculate for the transformer (i) equivalent resistance as referred to both primary and secondary, (ii) equivalent reactance as referred to both primary and secondary, (iii) equivalent impedance as referred to both primary and secondary, (iv) copper loss at full load, (v) copper loss at half load, and (vi) copper loss at 75% full load.

Solution

Given: $K = \dfrac{E_2}{E_1} = \dfrac{120}{2400} = 0.05$

$R_1 = 0.1\ \Omega,\ X_1 = 0.22\ \Omega$

$R_2 = 0.035\ \Omega,\ X_2 = 0.012\ \Omega$

(i) Equivalent resistance as referred to both primary and secondary,

$$R_{01} = R_1 + R_2'$$

$$= R_1 + \frac{R_2}{K^2}$$

$$= 0.1 + \frac{0.035}{(0.05)^2}$$

$$= 14.1\ \Omega$$

$$R_{02} = R_2 + R_1'$$

$$= R_2 + K^2 R_1$$

$$= 0.035 + (0.05)^2 \times 0.1$$

$$= 0.03525\ \Omega$$

(ii) Equivalent reactance as referred to both primary and secondary,

$$X_{01} = X_1 + X_2'$$

$$= X_1 + \frac{X_2}{K^2}$$

$$= 0.22 + \frac{0.012}{(0.05)^2}$$

$$= 5.02\ \Omega$$

$$X_{02} = X_2 + X_1'$$

$$= X_2 + K^2 X_1$$

$$= 0.012 + (0.05)^2 \times 0.22$$

$$= 0.01255\ \Omega$$

(iii) Equivalent impedance as referred to both primary and secondary,

$$Z_{01} = \sqrt{R_{01}^2 + X_{01}^2}$$

$$= \sqrt{14.1^2 + 5.02^2}$$

$$= 15\ \Omega$$

$$Z_{02} = \sqrt{R_{02}^2 + X_{02}^2}$$

$$= \sqrt{0.03525^2 + 0.01255^2}$$

$$= 0.0374\ \Omega$$

(iv) For calculation of copper loss, full-load currents are required. So,

$$(I_1)_{FL} = \frac{30 \times 1000}{2400} = 12.5\ \text{A}$$

and $$(I_2)_{FL} = \frac{30 \times 1000}{120} = 250\ \text{A}$$

Full-load copper loss,

$$[W_{cu}]_{FL} = (I_1)_{FL}^2 R_1 + (I_2)_{FL}^2 R_2$$

$$= (12.5)^2 \times 0.1 + (250)^2 \times 0.035$$

$$= 2203.13\ \text{W}$$

Alternative method:

$$[W_{cu}]_{FL} = (I_1)_{FL}^2 R_{01} \quad \text{or} \quad [W_{cu}]_{FL} = (I_2)_{FL}^2 R_{02}$$

$$= (12.5)^2 \times 14.1 \qquad\qquad = (250)^2 \times 0.03525$$

$$= 2203.13\ \text{W} \qquad\qquad = 2203.13\ \text{W}$$

(v) Copper loss at half load,

$$[W_{cu}]_{HL} = (I_1)_{HL}^2 R_{01}$$

$$= (0.5 \times 12.5)^2 \times 14.1$$

$$= 550.78\ \text{W}$$

(vi) Copper loss at 75% full load,

$$[W_{cu}]_{75\%FL} = (I_1)_{75\%FL}^2 R_{01}$$

$$= (0.75 \times 12.5)^2 \times 14.1$$

$$= 1239.26\ \text{W}$$

From the above example, it is clear that copper loss at half load is one-fourth of that at full load. Thus, copper loss is a variable loss and it varies with square of the current or load. If we know the cu loss at full load, we can calculate the cu loss at any load by using the following relation:

$$[W_{cu}]_{\text{at given load}} = (x)^2 \times [W_{cu}]_{FL}$$

where x = ratio of (actual) given load to full load

Example 4.9 A 40 kVA, single-phase transformer has full-load copper loss equal to 2500 W. Determine (i) copper loss at 60% full-load condition and (ii) copper loss at half-load condition.

Solution

(i) Copper loss at 60% full-load condition,

$$[W_{cu}]_{60\%FL} = (0.60)^2\ [W_{cu}]_{FL}$$

$$= (0.60)^2 \times 2500$$

$$= 900\ \text{W}$$

(ii) Copper loss at half-load condition,

$$[W_{cu}]_{HL} = (0.5)^2\ [W_{cu}]_{FL}$$

$$= (0.5)^2 \times 2500$$

$$= 625\ \text{W}$$

Example 4.10 For a transformer, copper loss at 75% full-load condition is equal to 1200 W. What is the copper loss at half load?

Solution

Given: $[W_{cu}]_{75\%\ FL} = 1200$ W

Required: $[W_{cu}]_{HL}$

First we will calculate the copper loss at full load.

We have, $[W_{cu}]_{75\%\ FL} = (0.75)^2\ [W_{cu}]_{FL}$

or $1200 = (0.75)^2\ [W_{cu}]_{FL}$

Hence, $[W_{cu}]_{FL} = 2133.33$ W

Now, $[W_{cu}]_{HL} = (0.5)^2\ [W_{cu}]_{FL}$

$$= (0.5)^2 \times 2133.33$$

$$= 533.33\ \text{W}$$

Example 4.11 A 230/110 V, 1-Φ transformer takes an input of 350 VA at no-load and at rated voltage. The core loss is 110 W. Find (i) the iron loss component of no-load current, (ii) magnetizing component of no-load current, and (iii) no-load pf.

Solution

Transformer input at no load is 350 VA.

So, $V_1 I_0 = 350$

or $230 \times I_0 = 350$

Hence, $I_0 = 1.52$ A

At no-load,

Input power = Core loss

or $V_1 I_0 \cos \phi_0 = 110$

or $350 \times \cos \phi_0 = 110$

or $\cos \phi_0 = 0.314$

No-load pf, $\cos \phi_0 = 0.314$

Iron loss component of no-load current,

$$I_W = I_0 \cos \phi_0 = 1.52 \times 0.314 = 0.477 \text{ A}$$

Magnetizing component of no-load current,

$$I_\mu = \sqrt{I_0^2 - I_W^2} = \sqrt{1.52^2 - 0.477^2} = 1.44 \text{ A}$$

Alternative method for calculation of I_μ:

As $\cos \phi_0 = 0.314$,

$\sin \phi_0 = 0.9493$

So, $I_\mu = I_0 \sin \phi_0 = 1.52 \times 0.9493 = 1.44$ A

EXERCISES 4.1

1. Define transformer. State two applications of transformer.
2. Derive emf equation for a transformer from the first principles.
3. Explain the principle of working of a single-phase transformer.
4. What is kVA rating of transformer?
5. Explain the various features of an ideal transformer.
6. Explain the construction of a single-phase transformer.
7. Discuss the differences between core-type and shell-type transformers.
8. Differentiate between ideal and practical transformers.
9. Draw a no-load phasor diagram of a transformer and explain it.

10. Write a note on various winding parameters of a transformer.
11. Enumerate the various losses in a transformer. How can these losses be minimized?
12. Mention different types of transformers. Classify them according to construction, output voltage level, application, etc. Why should a transformer not be connected to dc supply?
13. Draw and explain phasor diagram of a transformer, loaded with lagging power factor load.
14. A 50 kVA, 4400/220 V transformer has $R_1 = 3.45\ \Omega$, $R_2 = 0.009\ \Omega$. The reactances are $X_1 = 5.2\ \Omega$ and $X_2 = 0.015\ \Omega$. Calculate for the transformer
    (i) Full-load currents on primary and second sides
    (ii) Equivalent resistances, reactance, and impedances referred to primary and secondary sides
    (iii) Total copper loss using individual resistance and equivalent resistances.
    [*Ans.* (i) 11.36 A, 227.27 A, (ii) 7.05 Ω, 11.2 Ω, 13.234 Ω, 0.0176 Ω, 0.028 Ω, 0.033 Ω, (iii) 910 W]
15. A single-phase transformer has 400 primary and 1000 secondary turns. The net cross-sectional area of the core is 60 cm^2. If the primary winding be connected to a 50 Hz supply at 520 V, calculate
    (i) Peak value of the flux density in the core
    (ii) Voltage induced in the secondary winding
    [*Ans.* (i) 0.976 Wb/m^2, (ii) 1300 V]
16. A 25 kVA, single-phase transformer has 250 turns on the primary winding and 40 turns on the secondary winding. The primary winding is connected to 1500 V, 50 Hz mains. Calculate
    (i) Primary and secondary currents on full load
    (ii) Secondary emf
    (iii) Maximum flux in the core
    [*Ans.* (i) 16.67 A, 104.2 A, (ii) 240 V, (iii) 0.027 Wb]
17. It is desired to have 4.13 mWb maximum flux in the core of a transformer operating at 110 V and 50 Hz. Determine the required number of turns in the primary winding. [*Ans.* 120]
18. A 23 kVA, single-phase transformer has full-load copper loss equal to 2000 W. Calculate
    (i) Copper loss at 75% full load
    (ii) Copper loss at half load [*Ans.* (i) 1125 W, (ii) 500 W]
19. A 100 kVA transformer has secondary voltage of 400 V, 200 primary winding turns, and 40 secondary winding turns. Calculate the secondary current when the load is 25 kW at 0.8 power factor. [*Ans.* 78.125 A]
20. A 1000/200 V transformer takes 0.3 A at pf of 0.2 on open circuit. Find the magnetizing and iron loss components of no-load primary current.
    [*Ans.* 0.294 A; 0.06 A]

4.12 Equivalent Circuit

The complete details of the currents and their components, voltages, winding parameters of primary as well as secondary windings of a transformer are represented in one common electric circuit called **equivalent circuit** of the transformer. The equivalent circuit of a transformer is quite helpful in predetermining the behaviour of the transformer under various conditions of operation. In equivalent circuit, the actual transformer is assumed to be equivalent to an ideal transformer along with the additional parameters inserted between supply and primary winding and between secondary winding and load (see Fig. 4.18).

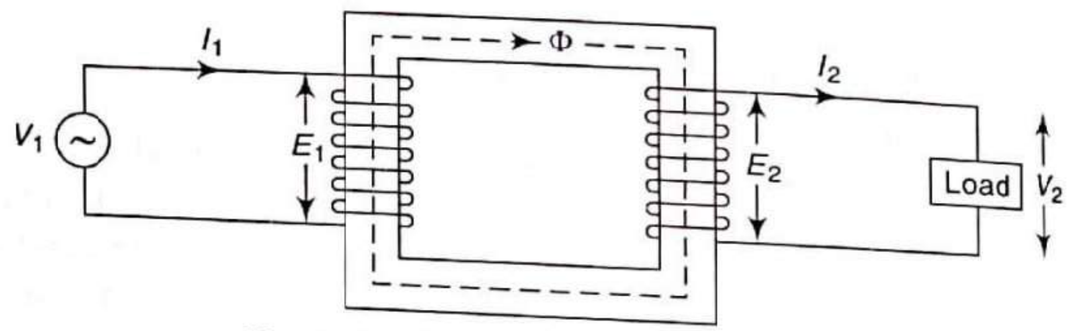

Fig. 4.17 Practical or actual transformer

The practical or actual transformer shown in Fig. 4.17 can be represented as an equivalent circuit in which the resistance and leakage reactance of the transformer are imagined to be external to the winding (refer to Fig. 4.18). We know that the no-load current I_0 has two components I_W and I_μ. The current I_W is in phase with voltage V_1, whereas I_μ lags behind the voltage V_1 by 90°. Therefore, in equivalent circuit, I_0 is simulated by pure inductance X_0 taking the magnetizing component I_μ and a resistance R_0 taking the working component I_W connected in parallel across the primary circuit. The resistance R_0 represents the core loss and so, the current I_W which supplies core loss, is shown passing through it. Thus, $I_W^2 R_0$ = core loss of the actual transformer.

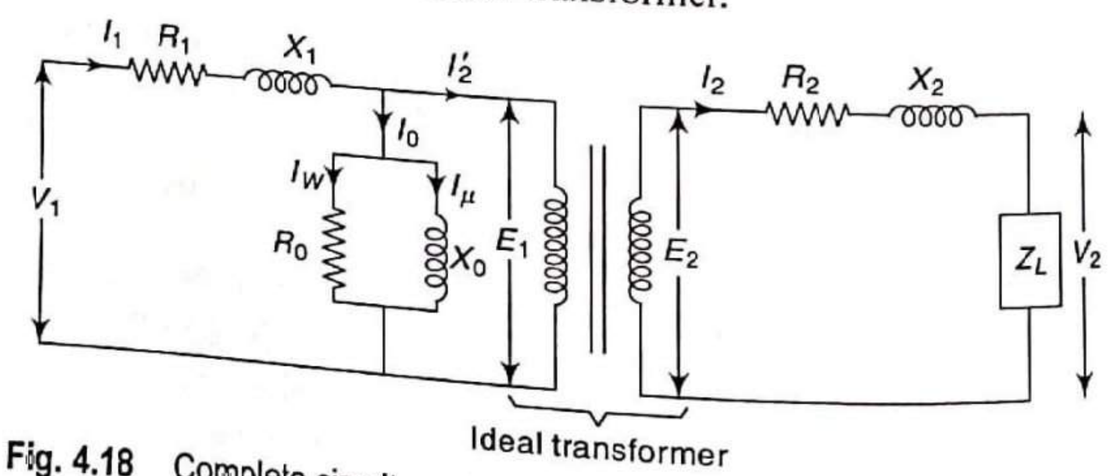

Fig. 4.18 Complete circuit model (equivalent circuit) of a practical transformer

Figure 4.18 shows the complete equivalent circuit of a transformer. An exact equivalent circuit of a transformer referred to the primary side can be obtained by transferring (reflecting) the entire secondary circuit to primary side as follows:

(i) All secondary resistances and reactances are transferred (reflected) to the primary by dividing them by the square of the transformation ratio. That is, the quantities R_2, X_2 and Z_L in the secondary become R_2/K^2, X_2/K^2 and Z_L/K^2 respectively, when referred to the primary.

(ii) All voltages are transferred (reflected) to the primary by dividing them by the transformation ratio. That is, the quantities V_2 and E_2 in the secondary become V_2/K and E_2/K respectively, when referred to the primary.

(iii) The secondary current is transferred (reflected) to the primary by multiplying it by the transformation ratio. That is, the current I_2 in the secondary becomes KI_2, when referred to the primary.

Figure 4.19 shows the equivalent circuit with all secondary values referred (reflected) to the primary. This circuit is called the **exact equivalent circuit** of the transformer referred to the primary.

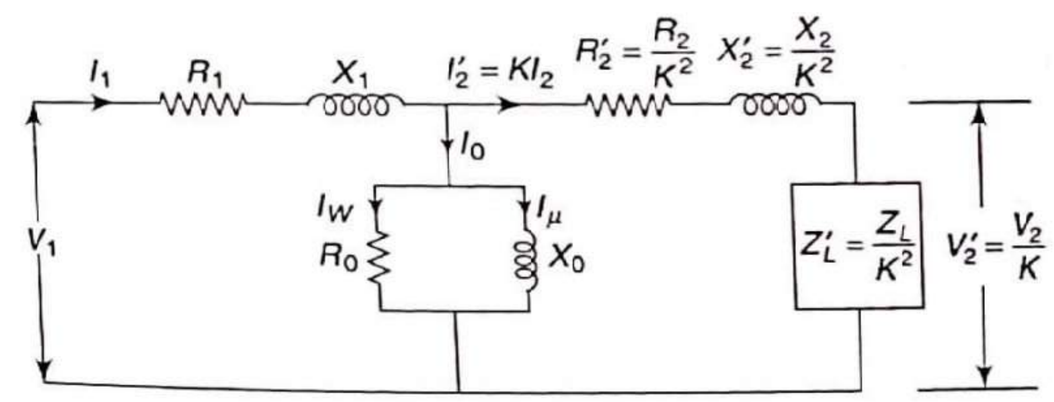

Fig. 4.19 Exact equivalent circuit of a transformer referred to the primary

With the equivalent circuit shown in Fig. 4.19, it is not possible to add directly the primary impedance $(R_1 + jX_1)$ to the secondary impedance transferred (reflected) to the primary side.

Figure 4.20 shows the approximate equivalent circuit referred to the primary. The justification for approximation is as follows:

The no-load current I_0 is usually less than 5% of the full-load primary current. The voltage drop produced by I_0 in $(R_1 + jX_1)$ is negligible for practical purposes. Therefore, it is immaterial that the shunt branch $R_0 \parallel X_0$ is connected before the primary series impedance $(R_1 + jX_1)$ or after it. The currents I_W and I_μ are not much affected. Therefore, the parallel branch $R_0 \parallel X_0$ is connected to the input terminals as shown in Fig. 4.20.

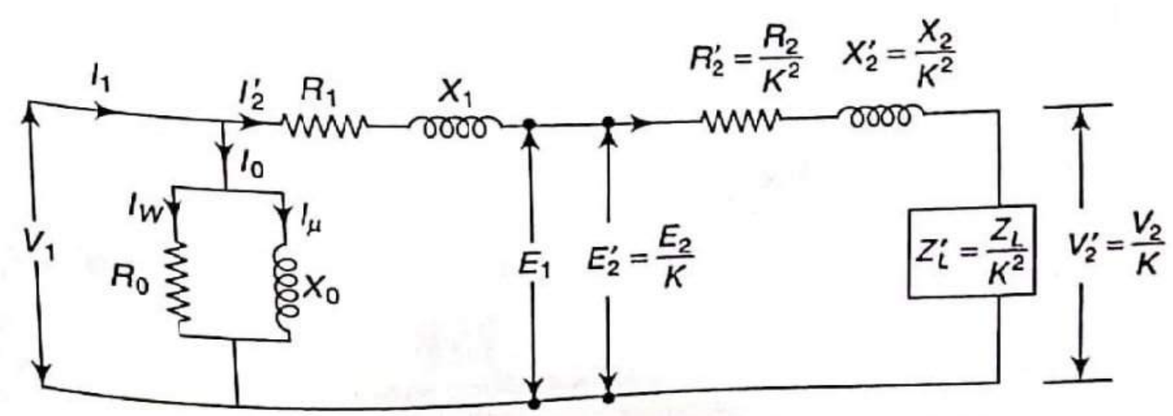

Fig. 4.20 Shifting of parallel branch $R_0 \parallel X_0$ to input side

Due to this approximation, the primary and secondary impedances referred (reflected) to the primary can be added conveniently.

That is, $R_1 + R_2' = R_{01}$

and $X_1 + X_2' = X_{01}$

Thus, we get the approximate equivalent circuit of the transformer as referred to the primary side as shown in Fig. 4.21.

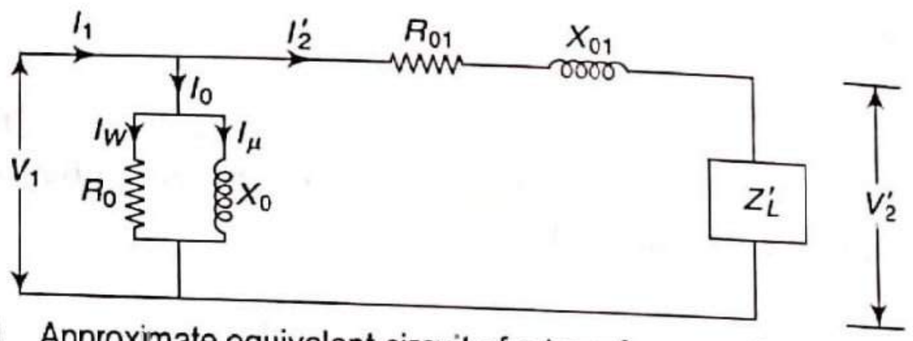

Fig. 4.21 Approximate equivalent circuit of a transformer referred to the primary

The main parameters of the equivalent circuit are:

R_{01} : equivalent resistance of transformer as referred to primary side
X_{01} : equivalent reactance of transformer as referred to primary side
R_0 : equivalent core loss resistance
X_0 : magnetizing reactance

4.13 Transformer Tests

The performance of a transformer can be calculated on the basis of its equivalent circuit, which contains four main parameters—R_{01} (equivalent resistance as referred to primary), X_{01} (equivalent leakage reactance as referred to primary), R_0 (equivalent core-loss resistance), and X_0 (magnetizing reactance). These constants or parameters can be easily determined by two tests: (i) open-circuit test and (ii) short-circuit test. These tests are very economical and convenient because they furnish the required information without actually loading the transformer.

4.13.1 Open-Circuit Test (No-Load Test)

The purpose of this test is to determine core loss (W_i), equivalent core loss resistance (R_0), magnetizing reactance (X_0), and no-load current (I_0). The circuit diagram of open-circuit test is shown in Fig. 4.22.

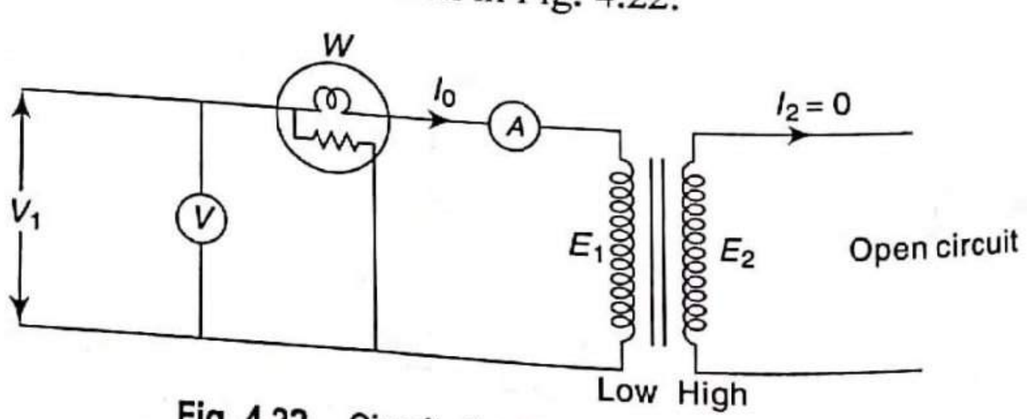

Fig. 4.22 Circuit diagram of open-circuit test

One winding of the transformer, whichever is convenient but usually the high-voltage winding[4], is left open and other is connected to the supply of normal voltage and frequency. A wattmeter, a voltmeter and an ammeter are connected in the low-voltage winding, i.e., the primary winding in the present case. With rated/normal voltage applied to the primary, normal flux will be set up in the core, and hence, normal iron losses will occur, which are recorded by the wattmeter. As the primary no-load current I_0 is small, copper loss is negligibly small in primary and nil in secondary (it being open). Hence, the wattmeter reading represents practically the core loss under no-load condition. Ammeter indicates the no-load primary current I_0.

Let wattmeter reading = W watt
ammeter reading = I_0 ampere
voltmeter reading = V_1 volt

Figure 4.23 shows the phasor diagram under no-load condition (open circuit).

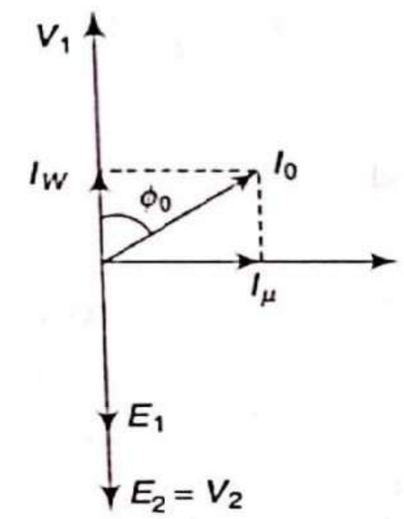

Fig. 4.23 Phasor diagram under no-load condition (open circuit)

The equivalent circuit of a transformer under no-load condition is shown in Fig. 4.24. This equivalent circuit is derived from the approximate equivalent circuit of Fig. 4.21. The approximate equivalent circuit is modified according to the open-circuit test condition, i.e., as secondary is open, the load is removed and the load component of the primary current I_2' is made zero.

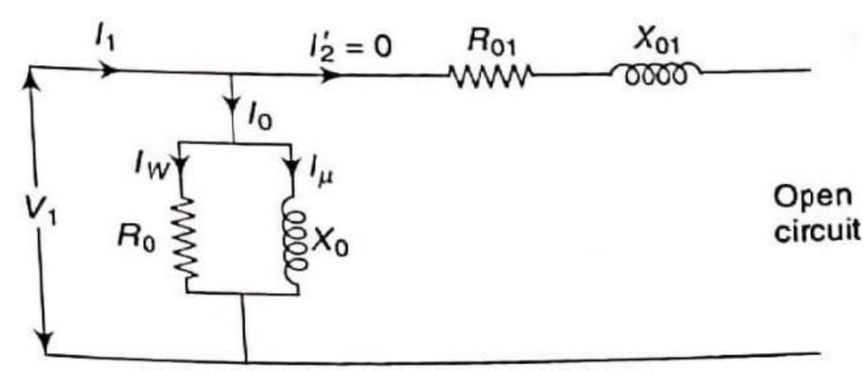

Fig. 4.24 Equivalent circuit of a transformer under no-load condition

Calculation for R_0 and X_0

The wattmeter reading indicates the input power, i.e.,

$$W = V_1 I_0 \cos \phi_0 \text{ W}$$

where W, V_1 and I_0 are the wattmeter, voltmeter and ammeter readings respectively.

So, $$\cos \phi_0 = \frac{W}{V_1 I_0}$$

[4]The rated voltage on the low-voltage side is lower than that on the high-voltage side. This voltage can be safely applied and measured with the available laboratory voltmeters.

Now, $I_W = I_0 \cos \phi_0$
and $I_\mu = I_0 \sin \phi_0$
From equivalent circuit of Fig. 4.24,

$$R_0 = \frac{V_1}{I_W} \ \Omega$$

and $$X_0 = \frac{V_1}{I_\mu} \ \Omega$$

4.13.2 Short Circuit (SC) Test

This is an economical method to determine copper loss (W_{cu}) at full load (and at any desired load), equivalent resistance (R_{01} or R_{02}), equivalent reactance (X_{01} or X_{02}), and equivalent impedance (Z_{01} or Z_{02}). The circuit diagram of short-circuit test (conducted on the primary side) is shown in Fig. 4.25.

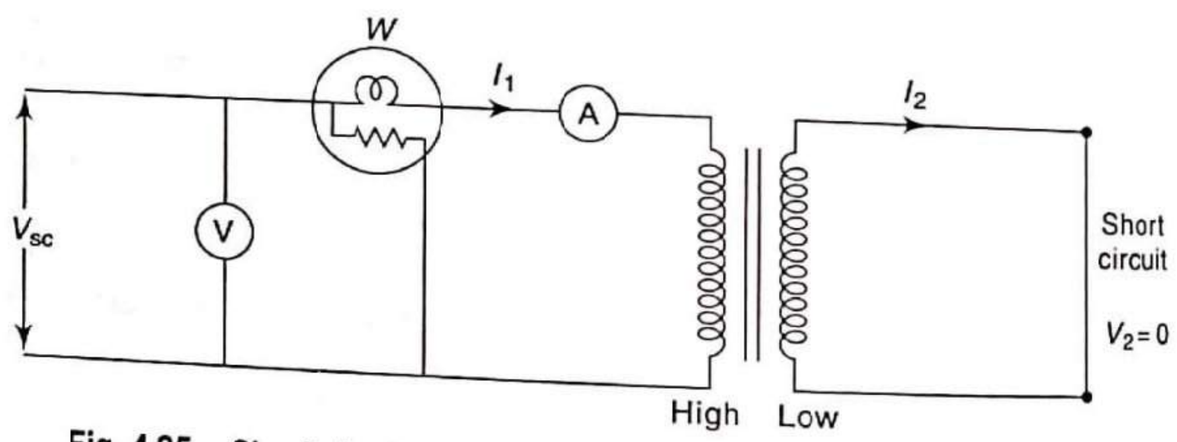

Fig. 4.25 Circuit diagram of short-circuit test (conducted on primary side)

In this test, one winding, usually the low-voltage winding[5], is short circuited by thick conductor as shown in Fig. 4.25. A low voltage is applied to the primary and is cautiously increased till full-load currents are flowing both in the primary and the secondary (as indicated by the ammeter). Since in this test, the applied voltage is a small percentage of the normal voltage, the mutual flux Φ produced is also a small percentage of its normal value. Hence, core losses are very small with the result that the wattmeter reading represents the full-load copper loss of the transformer.

Let wattmeter reading = W watt
ammeter reading = I_1 ampere
voltmeter reading = V_{sc} volt

The equivalent circuit of a transformer under this condition is shown in Fig. 4.26. This equivalent circuit is derived from the approximate equivalent

[5]The rated current on the high-voltage side is lower than that on the low-voltage side. This current can be safely measured with the available laboratory ammeters. Also since the applied voltage is less than 5% of the rated voltage of the winding, greater accuracy in the reading of the voltmeter is possible when the test is conducted on the high-voltage side.

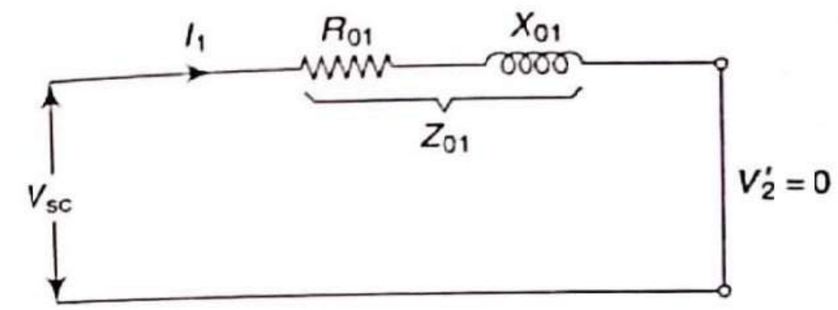

Fig. 4.26 Equivalent circuit of a transformer under short-circuit test condition

circuit of Fig. 4.21. The approximate equivalent circuit is modified according to the short-circuit test condition, i.e., as secondary is shorted, the secondary voltage is made zero. As core loss is negligible, the equivalent core loss resistance R_0 is removed. Therefore, the value of I_0 becomes very small, and so it is neglected in the equivalent circuit.

Calculation for R_{01}, X_{01} and Z_{01}

The wattmeter reading indicates the copper loss, i.e.,

$$W = I_1^2 R_{01}$$

So, $$R_{01} = \frac{W}{I_1^2} \ \Omega$$

From equivalent circuit shown in Fig. 4.26, we get

$$Z_{01} = \frac{V_{sc}}{I_1} \ \Omega$$

where W, V_{sc} and I_1 are the wattmeter, voltmeter and ammeter readings respectively.

Now, $$X_{01} = \sqrt{Z_{01}^2 - R_{01}^2} \ \Omega$$

In the above case, sc test is conducted on the primary side. If it is conducted on the secondary side, then the corresponding circuit diagram and calculation of the parameters would be as follows:

The circuit diagram of short-circuit test (conducted on the secondary side) is shown in Fig. 4.27.

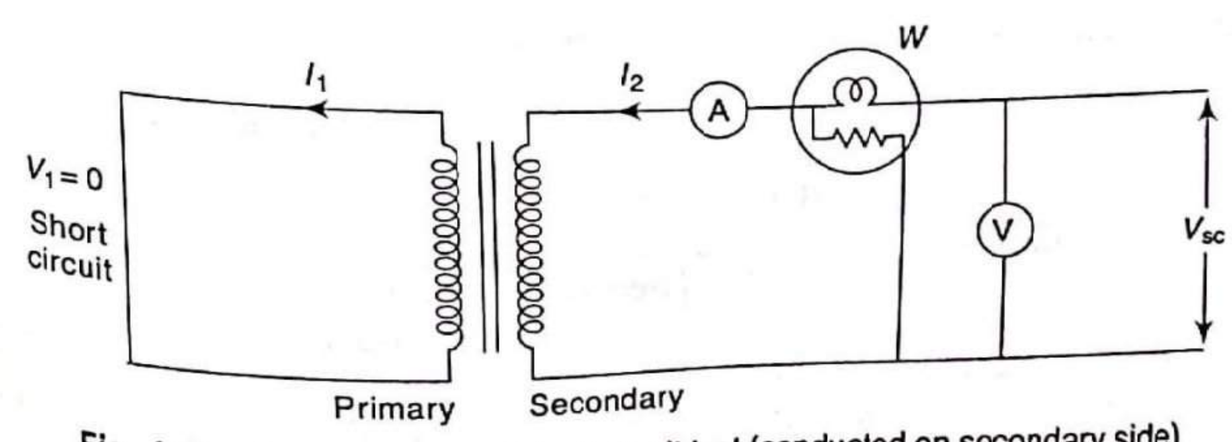

Fig. 4.27 Circuit diagram of short-circuit test (conducted on secondary side)

Let wattmeter reading = W watt
ammeter reading = I_2 ampere
voltmeter reading = V_{sc} volt

The constants or parameters can be calculated as follows:

The wattmeter indicates the Cu loss, i.e.,

$$W = I_2^2 R_{02}$$

or $$R_{02} = \frac{W}{I_2^2}\ \Omega$$

and $$Z_{02} = \frac{V_{sc}}{I_2}\ \Omega$$

where W, V_{sc} and I_2 are the wattmeter, voltmeter and ammeter readings respectively.

Now, $$X_{02} = \sqrt{Z_{02}^2 - R_{02}^2}\ \Omega$$

Also, R_{01} and X_{01} can be calculated as follows:

$$R_{01} = \frac{R_{02}}{K^2}\ \Omega \quad \text{and} \quad X_{01} = \frac{X_{02}}{K^2}\ \Omega$$

4.14 Regulation of a Transformer

When a transformer is loaded with a constant primary voltage, because of the voltage drop across the primary and secondary impedances, it is observed that secondary terminal voltage drops from its no-load value (E_2) as load current increases.

This change in secondary terminal voltage from no load to the given load conditions, expressed as a fraction of the no-load secondary terminal voltage is called **regulation of the transformer.**

Let E_2 = secondary terminal voltage on no load
V_2 = secondary terminal voltage on the given load

Then mathematically voltage regulation at the given load can be calculated as

$$\% \text{ regulation} = \frac{\begin{pmatrix}\text{Secondary terminal}\\ \text{voltage on no load}\end{pmatrix} - \begin{pmatrix}\text{Secondary terminal}\\ \text{voltage on the}\\ \text{given load}\end{pmatrix}}{\begin{pmatrix}\text{Secondary terminal}\\ \text{voltage on no load}\end{pmatrix}} \times 100$$

or $$\% \text{ regulation} = \frac{E_2 - V_2}{E_2} \times 100$$

The secondary terminal voltage does not depend only on the magnitude of the load current but also on the nature of power factor of the load.

The voltage regulation is a figure of merit of a transformer. The smaller the voltage regulation, the better is the performance of the transformer. For an ideal transformer, as the primary and secondary impedances supposed to be zero, there are no voltage drops, so regulation remains zero.

Expression for voltage regulation

The simplified equivalent circuit of a transformer with resistance and reactance referred to the secondary winding has been shown in Fig. 4.28. The phasor diagram of the secondary side of the equivalent circuit is drawn in Fig. 4.29(a) for lagging power factor load, which is self-explanatory. In order to find out approximate formula for the voltage regulation of the transformer, the phasor diagram is modified as shown in Fig. 4.29(b), using the following steps:

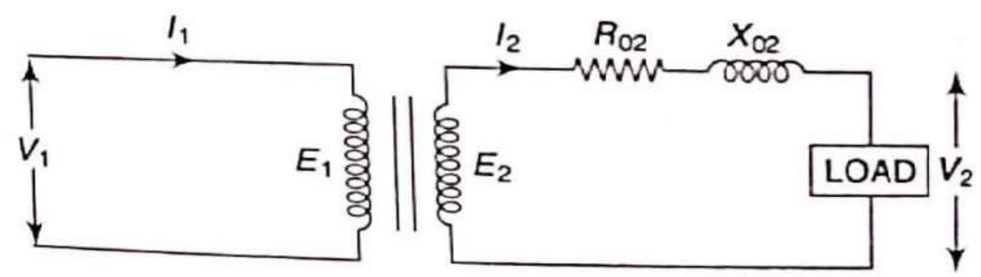

Fig. 4.28 Simplified equivalent circuit

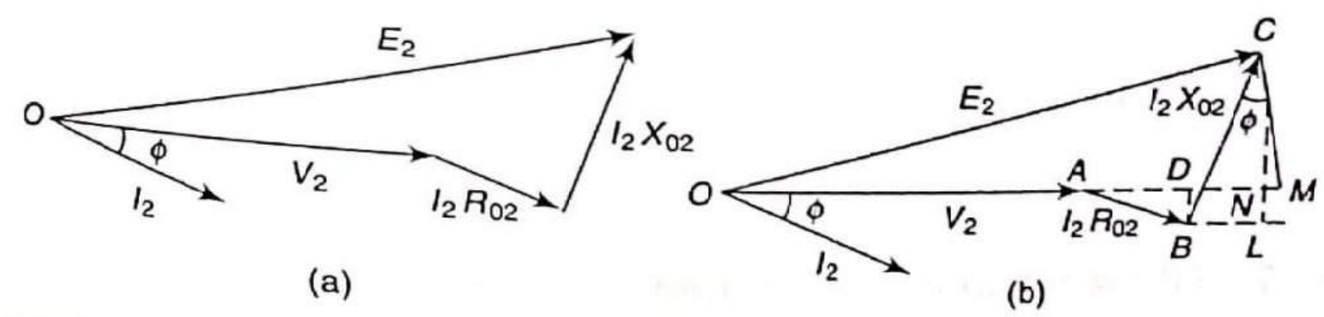

Fig. 4.29 Phasor diagram

1. Draw an arc with centre O and radius OC so as to cut the line OA produced at M.
2. From the point C, drop a perpendicular CN on the line OM.
3. Draw a perpendicular from the point B on the line ON.
4. Draw BL perpendicular to CN produced.

Total voltage drop $= E_2 - V_2 = OC - OA = OM - OA$
$= AM = AN + NM$

approximate voltage drop $\cong AN$ (since NM is very small)
$= AD + DN = AD + BL$
$= I_2 R_{02} \cos\phi + I_2 X_{02} \sin\phi$

So, $$\% \text{ regulation} = \frac{I_2 R_{02} \cos\phi + I_2 X_{02} \sin\phi}{E_2} \times 100$$

For leading pf, it can be proved that

$$\text{approximate voltage drop} = I_2R_{02}\cos\phi - I_2X_{02}\sin\phi$$

$$\%\ \text{regulation} = \frac{I_2R_{02}\cos\phi - I_2X_{02}\sin\phi}{E_2}\times 100$$

Hence, in general,

$$\%\ \text{regulation} = \frac{I_2R_{02}\cos\phi \pm I_2X_{02}\sin\phi}{E_2}\times 100$$

'+' sign is used for lagging pf and '–' sign is used for leading pf.

On the primary side, the regulation can be expressed as

$$\%\ \text{regulation} = \frac{I_1R_{01}\cos\phi \pm I_1X_{01}\sin\phi}{E_1}\times 100$$

We can also express percentage regulation as

$$\%\ \text{regulation} = \frac{100\,I_2R_{02}}{E_2}\cos\phi \pm \frac{100\,I_2X_{02}}{E_2}\sin\phi$$

$$= v_r\cos\phi \pm v_x\sin\phi$$

where $v_r = \dfrac{100\,I_2R_{02}}{E_2}$ = percentage resistive drop

$v_x = \dfrac{100\,I_2X_{02}}{E_2}$ = percentage reactive drop

4.15 Efficiency of a Transformer

Due to the losses in a transformer, the output power of a transformer is less than the input power supplied. The **efficiency of any device** is defined as the ratio of the output power to the input power. So, for a transformer, the efficiency can be expressed as

$$\eta = \frac{\text{Output power}}{\text{Input power}}$$

$$= \frac{\text{Output power}}{\text{Output power} + \text{Total losses}}$$

$$= \frac{\text{Output power}}{\text{Output power} + W_i + W_{cu}}$$

where W_i = iron loss and W_{cu} = copper loss

Thus, in general, the efficiency at any load is given by

$$\%\ \eta = \frac{(x \times \text{full-load kVA} \times \text{pf})}{(x \times \text{full-load kVA} \times \text{pf}) + W_i + x^2\,[W_{cu}]_{FL}} \times 100$$

where W_i = iron loss in kW

$[W_{cu}]_{FL}$ = copper loss at full load in kW

x = ratio of given load (actual) to full load

The explanation of the above expression of efficiency is given below:

For transformer, output power = $V_2I_2\cos\phi$ W

$$= \frac{V_2I_2}{1000}\cos\phi \text{ kW}$$

But $\cos\phi = \text{pf}$ and $\dfrac{V_2I_2}{1000} = \text{kVA}$

So, output power = (kVA × pf) kW

The output power at any given load can be calculated as follows:

Output power at the given load = (kVA at given load × pf) kW

Output power at the given load = (x × full-load kVA × pf) kW

Since kVA at the given load = x × full-load kVA

where x is the ratio of given load (actual) to full load

Similarly, copper loss at any given load is given by

$$[W_{cu}]_{\text{at given load}} = x^2[W_{cu}]_{FL}$$

So, $$\%\ \eta = \frac{[x \times \text{full-load kVA} \times \text{pf}]}{[x \times \text{full-load kVA} \times \text{pf}] + W_i + x^2\,[W_{cu}]_{FL}} \times 100$$

4.16 Condition for Maximum Efficiency

When a transformer works on a constant input voltage and frequency, efficiency varies with load. As load increases, the efficiency also increases. At a certain load current, it achieves a maximum value. If the transformer is loaded further, the efficiency starts decreasing. The graph of efficiency versus load current I_2 is shown in Fig. 4.30. The load current at which the efficiency attains the maximum value is denoted by I_{2max} and the maximum efficiency is denoted by η_{max}.

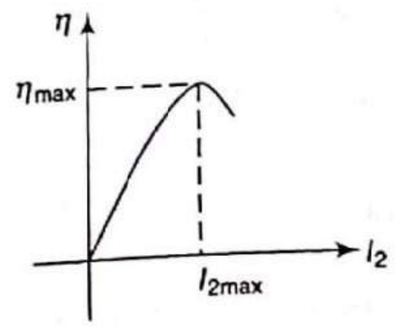

Fig. 4.30 Efficiency vs load current

We know that

$$\eta = \frac{\text{Output power}}{\text{Input power}}$$

or $$= \frac{\text{Input power} - \text{Losses}}{\text{Input power}} \quad \because \text{Output power} = \text{Input power} - \text{Losses}$$

Let $W_{cu} = I_1^2 R_{01}$ or $W_{cu} = I_2^2 R_{02}$

Iron (core) loss = W_i

Input power = $V_1 I_1 \cos\phi$

So, $$\eta = \frac{V_1 I_1 \cos\phi - I_1^2 R_{01} - W_i}{V_1 I_1 \cos\phi}$$

$$= 1 - \frac{I_1 R_{01}}{V_1 \cos\phi} - \frac{W_i}{V_1 I_1 \cos\phi}$$

The current I_1 varies according to the load. Therefore, in the above expression, the efficiency is a function of current I_1 assuming $\cos\phi$ as a constant. The applied voltage V_1 is also assumed as a constant.

For η_{max}, $\frac{d\eta}{dI_1} = 0$

So, $$\frac{d\eta}{dI_1} = 0 - \frac{R_{01}}{V_1 \cos\phi} + \frac{W_i}{V_1 I_1^2 \cos\phi} = 0$$

or $$\frac{W_i}{V_1 I_1^2 \cos\phi} = \frac{R_{01}}{V_1 \cos\phi}$$

or $W_i = I_1^2 R_{01}$

or $W_i = I_2^2 R_{02}$ $(\because I_1^2 R_{01} = I_2^2 R_{02})$

Thus, the condition to achieve maximum efficiency is[6]

Iron loss = Copper loss

Load current at η_{max}

For η_{max}, $I_2^2 R_{02} = W_i$ but $I_2 = I_{2max}$

So, $I_{2max}^2 R_{02} = W_i$

or $$I_{2max} = \sqrt{\frac{W_i}{R_{02}}}$$

This is value of the load current at η_{max}.

Dividing both sides by $(I_2)_{FL}$,

$$\frac{I_{2max}}{(I_2)_{FL}} = \frac{1}{(I_2)_{FL}} \sqrt{\frac{W_i}{R_{02}}}$$

[6]For a transformer, iron loss is constant. So, when the copper loss becomes equal to the iron loss, the maximum efficiency occurs.

or $$\frac{I_{2max}}{(I_2)_{FL}} = \sqrt{\frac{W_i}{(I_2)_{FL}^2 R_{02}}}$$

or $$I_{2max} = (I_2)_{FL} \times \sqrt{\frac{W_i}{[W_{cu}]_{FL}}}$$

This is the load current at η_{max} in terms of the full-load current.

kVA at η_{max}

$$\text{kVA at } \eta_{max} = \frac{V_2 I_{2max}}{1000}$$

Substituting the value of $I_{2\,max}$ in the above expression, we get

$$\text{kVA at } \eta_{max} = \frac{V_2 (I_2)_{FL}}{1000} \times \sqrt{\frac{W_i}{[W_{cu}]_{FL}}}$$

$$= (\text{full-load kVA}) \times \sqrt{\frac{W_i}{[W_{cu}]_{FL}}}$$

This is the kVA at η_{max}.

Now, the maximum efficiency η_{max} can be calculated as follows:

$$\% \eta_{max} = \frac{\text{Output power at } \eta_{max}}{\text{Output power at } \eta_{max} + \text{Total losses}} \times 100$$

$$= \frac{(\text{kVA at } \eta_{max} \times \text{pf})}{(\text{kVA at } \eta_{max} \times \text{pf}) + 2W_i} \times 100 \qquad [\because W_i = W_{cu}]$$

Load at η_{max}

Let at 'x' times full load, the efficiency is maximum.

So, copper loss at $\eta_{max} = x^2 \times [W_{cu}]_{FL}$

But at η_{max}, iron (or core) loss = copper, loss

$W_i = x^2 \times [W_{cu}]_{FL}$

or $$x = \sqrt{\frac{W_i}{[W_{cu}]_{FL}}}$$

We get the expression for η_{max} as

$$\% \eta_{max} = \frac{(x \times \text{full-load kVA} \times \text{pf})}{(x \times \text{full-load kVA} \times \text{pf}) + 2W_i} \times 100 \quad [\because \text{at } \eta_{max}, W_i = W_{cu}]$$

where $$x = \sqrt{\frac{W_i}{[W_{cu}]_{FL}}}$$

4.17 All-Day Efficiency

The primary winding of a distribution transformer is connected to the line for all the 24 hours of the day. Thus, the core (iron) losses occur for the whole 24 hours, whereas copper losses occur only when transformer is on load. Distribution transformers operate well below the rated power output for most of the time. These transformers normally operate on a varying load during 24 hours of the day. So, copper losses are different during different periods of the day. The performance of a distribution transformer is more appropriately represented by all-day or energy efficiency. Energy efficiency of a transformer is defined as the ratio of total energy output for a certain period to the total energy input for the same period. The energy efficiency can be calculated for any specific period. When the energy efficiency is calculated for a day of 24 hours, it is called the all-day efficiency. **All-day efficiency** is defined as the ratio of the energy output to the energy input taken over a 24-hour period.

Consequently, all-day efficiency of the transformer is given by

$$\%\ \text{all-day efficiency} = \frac{\text{Output energy in kWh over 24 hours}}{\text{Input energy in kWh over 24 hours}} \times 100$$

or

$$\%\ \eta_{\text{all day}} = \frac{\text{Output energy in kWh over 24 hours}}{\left(\begin{array}{c}\text{Output energy}\\ \text{in kWh over}\\ \text{24 hours}\end{array}\right) + \left(\begin{array}{c}\text{Energy spent}\\ \text{in iron loss}\\ \text{for 24 hours}\end{array}\right) + \left(\begin{array}{c}\text{Energy spent}\\ \text{in copper loss}\\ \text{for 24 hours}\end{array}\right)} \times 100$$

For a given kVA loading, the all-day efficiency of a transformer is less than its commercial efficiency.

Example 4.12 A single-phase, 440/220 V, 10 kVA, 50 Hz transformer has a resistance of 0.2 Ω and a reactance of 0.6 Ω on high-voltage side. The corresponding values of low-voltage side are 0.04 Ω and 0.14 Ω. Calculate the percentage regulation on full load for (i) 0.8 lagging pf, (ii) 0.8 leading pf, and (iii) unity pf.

Solution

The given values are:

$$E_1 = 440\ \text{V},\ E_2 = 220\ \text{V},\ R_1 = 0.2\ \Omega,\ X_1 = 0.6\ \Omega,\ R_2 = 0.04\ \Omega,\ X_2 = 0.14\ \Omega$$

Secondary current at full load,

$$(I_2)_{FL} = \frac{10 \times 1000}{220} = 45.45\ \text{A}$$

Transformation ratio, $K = \dfrac{E_2}{E_1} = \dfrac{220}{440} = 0.5$

$$R_{02} = R_2 + R_1' = R_2 + K^2 R_1 = 0.04 + (0.5)^2 \times 0.2 = 0.09\ \Omega$$

$$X_{02} = X_2 + X_1' = X_2 + K^2 X_1 = 0.14 + (0.5)^2 \times 0.6 = 0.29\ \Omega$$

(i) Percentage regulation at full-load 0.8 pf lagging:

$\cos\phi = 0.8$

So, $\sin\phi = 0.6$

We have

$$\%\ \text{regulation} = \frac{I_2 R_{02}\cos\phi + I_2 X_{02}\sin\phi}{E_2} \times 100$$

$$= \frac{45.45 \times 0.09 \times 0.8 + 45.45 \times 0.29 \times 0.6}{220} \times 100$$

$$= 5.082$$

(ii) Percentage regulation at full-load 0.8 pf leading:

$\cos\phi = 0.8$

So, $\sin\phi = 0.6$

$$\%\ \text{regulation} = \frac{I_2 R_{02}\cos\phi - I_2 X_{02}\sin\phi}{E_2} \times 100$$

$$= \frac{45.45 \times 0.09 \times 0.8 - 45.45 \times 0.29 \times 0.6}{220} \times 100$$

$$= -2.107$$

(iii) Percentage regulation at full-load unity pf:

$$\%\ \text{regulation} = \frac{I_2 R_{02}\cos\phi \pm I_2 X_{02}\sin\phi}{E_2} \times 100$$

$$= \frac{I_2 R_{02}\cos\phi}{E_2} \times 100 \qquad [\because \sin\phi = 0]$$

$$= \frac{45.45 \times 0.09 \times 1}{220} \times 100$$

$$= 1.859$$

Example 4.13 A 250/125 V, 5 kVA single-phase transformer has a primary resistance of 0.2 Ω and a reactance of 0.75 Ω. The secondary resistance is 0.05 Ω and reactance is 0.2 Ω. Determine (i) the regulation while supplying full load on 0.8 leading pf, and (ii) the secondary terminal voltage on full load and 0.8 leading pf.

Solution

The given values are:

$$R_1 = 0.2\ \Omega,\ X_1 = 0.75\ \Omega,\ R_2 = 0.05\ \Omega,\ X_2 = 0.2\ \Omega,\ \text{pf} = 0.8\ \text{leading}$$

Now, $K = \dfrac{E_2}{E_1} = \dfrac{125}{250} = 0.5$

$$(I_2)_{FL} = \frac{\text{kVA rating} \times 1000}{E_2} = \frac{5 \times 1000}{125} = 40\ \text{A}$$

$$R_{02} = R_2 + R_1' = R_2 + K^2 R_1 = 0.05 + (0.5)^2 \times 0.2 = 0.1\ \Omega$$

$$X_{02} = X_2 + X_1' = X_2 + K^2 X_1 = 0.2 + (0.5)^2 \times 0.75 = 0.3875\ \Omega$$

(i) Regulation on full-load 0.8 leading pf:

$\cos\phi = 0.8$ leading

So, $\sin\phi = 0.6$

$$\%\ \text{regulation} = \frac{I_2 R_{02}\cos\phi - I_2 X_{02}\sin\phi}{E_2} \times 100$$

$$= \frac{40 \times 0.1 \times 0.8 - 40 \times 0.3875 \times 0.6}{125} \times 100$$

$$= -4.88$$

(ii) The secondary terminal voltage on full-load 0.8 leading pf:

By using basic expression of regulation,

$$\%\ \text{regulation} = \frac{E_2 - V_2}{E_2} \times 100$$

At full-load 0.8 leading pf, regulation is −4.88%.

So, $-4.88 = \dfrac{125 - V_2}{125} \times 100$

or $-6.1 = 125 - V_2$

or $V_2 = 131.3$ V

Example 4.14 A 50 kVA, 2300/230 V, single-phase transformer has primary and secondary winding resistances of 2 Ω and 0.02 Ω respectively. The iron loss is 412 W. Calculate the efficiency (i) at full load and (ii) at half-full load. The load pf is 0.8.

Solution

Given: $R_1 = 2\ \Omega$, $R_2 = 0.02\ \Omega$, $W_i = 412$ W, pf = 0.8

The full-load primary and secondary currents are:

$$(I_1)_{FL} = \frac{\text{kVA rating} \times 1000}{E_1} = \frac{50 \times 1000}{2300} = 21.739\ \text{A}$$

$$(I_2)_{FL} = \frac{\text{kVA rating} \times 1000}{E_2} = \frac{50 \times 1000}{230} = 217.39\ \text{A}$$

(i) Efficiency at full-load 0.8 pf:

First, we will calculate the copper lost at full load.

$$[W_{cu}]_{FL} = (I_1)_{FL}^2 R_1 + (I_2)_{FL}^2 R_2$$

$$= (21.739)^2 \times 2 + (217.39)^2 \times 0.02$$

$$= 1890\ \text{W}$$

$$= 1.89\ \text{kW}$$

We know that efficiency at any load can be calculated as

$$\%\ \eta = \frac{(x \times \text{full-load kVA} \times \text{pf})}{(x \times \text{full-load kVA} \times \text{pf}) + W_i + x^2 [W_{cu}]_{FL}} \times 100$$

where x = ratio of given load to full load

W_i = iron loss in kW

$[W_{cu}]_{FL}$ = copper loss at full load in kW

Now, efficiency at full-load 0.8 pf is required.

We have $x = 1$, full-load kVA = rated kVA = 50, pf = 0.8, $W_i = 0.142$ kW

$$\text{Hence, } \%\ \eta = \frac{(1 \times 50 \times 0.8)}{(1 \times 50 \times 0.8) + 0.412 + (1)^2 \times 1.89} \times 100$$

$$= 94.56$$

(ii) Efficiency at half-full load 0.8 pf:

$$\%\ \eta = \frac{(x \times \text{full load kVA} \times \text{pf})}{(x \times \text{full load kVA} \times \text{pf}) + W_i + x^2 [W_{cu}]_{FL}} \times 100$$

$$= \frac{(0.5 \times 50 \times 0.8)}{(0.5 \times 50 \times 0.8) + 0.412 + (0.5)^2 \times 1.89} \times 100$$

$$= 95.76$$

Example 4.15 In a 25 kVA, 2000/200 V transformer, the iron and full load copper losses are 350 W and 400 W respectively. Calculate the efficiency at full load 0.8 pf lagging. Determine the load in kVA at which the maximum efficiency occurs. Also determine the maximum efficiency.

Solution

Given: $W_i = 350$ W, $[W_{cu}]_{FL} = 400$ W

Efficiency of full load 0.8 pf lagging:

$$\%\ \eta = \frac{(x \times \text{full-load kVA} \times \text{pf})}{(x \times \text{full-load kVA} \times \text{pf}) + W_i + x^2 [W_{cu}]_{FL}} \times 100$$

$$= \frac{(1 \times 25 \times 0.8)}{(1 \times 25 \times 0.8) + 0.35 + (1)^2 \times 0.4} \times 100$$

$$= 96.39$$

Load in kVA at which maximum efficiency occurs:

$$(\text{kVA}) \text{ at } \eta_{max} = (\text{full-load kVA})\sqrt{\frac{W_i}{[W_{cu}]_{FL}}}$$

$$= 25\sqrt{\frac{350}{400}}$$

$$= 23.385$$

Maximum efficiency:

η_{max} can be calculated as follows:

$$\% \ \eta_{max} = \frac{(\text{kVA at } \eta_{max} \times \text{pf})}{(\text{kVA at } \eta_{max} \times \text{pf}) + 2W_i} \times 100, \text{ where } W_i = \text{iron loss in kW}$$

$$= \frac{(23.385 \times 0.8)}{(23.385 \times 0.8) + 2(0.35)} \times 100$$

$$= 96.39$$

Alternating method for calculation of η_{max}:

Let at x time full load, the efficiency is maximum.

The value of x can be calculated as follows:

$$x = \sqrt{\frac{W_i}{[W_{cu}]_{FL}}}$$

$$= \sqrt{\frac{350}{400}}$$

$$= 0.9354$$

Now, η_{max} can be calculated as follows:

$$\% \ \eta_{max} = \frac{(x \times \text{full-load kVA} \times \text{pf})}{(x \times \text{full-load kVA} \times \text{pf}) + 2W_i} \times 100, \qquad [\because W_i = W_{cu}]$$

where W_i = iron loss in kW

$$= \frac{(0.9354 \times 25 \times 0.8)}{(0.9354 \times 25 \times 0.8) + 2(0.35)} \times 100$$

$$= 96.39$$

Example 4.16 A 40 kVA transformer has a core loss of 450 W, full-load copper loss of 850 W. If the power factor of the load is 0.8, calculate (i) the full-load efficiency, (ii) the maximum efficiency, and (ii) the load in kVA at which the maximum efficiency occurs.

Solution

Given: $W_i = 450$ W, $[W_{cu}]_{FL} = 850$ W, pf = 0.8

(i) Efficiency at full-load 0.8 pf:

$$\% \ \eta = \frac{(x \times \text{full-load kVA} \times \text{pf})}{(x \times \text{full-load kVA} \times \text{pf}) + W_i + x^2 [W_{cu}]_{FL}} \times 100$$

$$= \frac{(1 \times 40 \times 0.8)}{(1 \times 40 \times 0.8) + 0.45 + (1)^2 \times 0.85} \times 100$$

$$= 96.1$$

(ii) Maximum efficiency:

Let at x times full load, the efficiency is maximum.

The value of x can be calculated as

$$x = \sqrt{\frac{W_i}{[W_{cu}]_{FL}}} = \sqrt{\frac{450}{850}} = 0.7276$$

Now, the maximum efficiency can be calculated as

$$\% \ \eta_{max} = \frac{(x \times \text{full-load kVA} \times \text{pf})}{(x \times \text{full-load kVA} \times \text{pf}) + 2W_i} \times 100 \qquad (\because W_i = W_{cu})$$

where W_i = iron loss in kW

$$\text{So, } \% \eta_{max} = \frac{(0.7276 \times 40 \times 0.8)}{(0.7276 \times 40 \times 0.8) + 2(0.45)} \times 100$$

$$= 96.28$$

(iii) The load in kVA at maximum efficiency:

$$\text{kVA of } \eta_{max} = \text{full-load kVA} \sqrt{\frac{W_i}{[W_{cu}]_{FL}}}$$

$$= 40 \sqrt{\frac{0.45}{0.85}}$$

$$= 29.1$$

Example 4.17 A 20 kVA, 2000/200 V, transformer primary resistance and reactance of 2.3 Ω and 4.2 Ω respectively. Corresponding secondary values are 0.025 Ω and 0.04 Ω. Open-circuit loss is 200 W. Determine (i) equivalent resistance and reactance referred to primary and secondary and (ii) full-load regulation and efficiency at 0.8 pf lagging.

Solution

Given: $R_1 = 2.3\ \Omega$, $X_1 = 4.2\ \Omega$, $R_2 = 0.025\ \Omega$, $X_2 = 0.04\ \Omega$,

open-circuit loss = $W_i = 200$ W

Full-load currents are:

$$(I_1)_{FL} = \frac{\text{kVA rating} \times 1000}{E_1} = \frac{20 \times 1000}{2000} = 10 \text{ A}$$

$$(I_2)_{FL} = \frac{\text{kVA rating} \times 1000}{E_2} = \frac{20 \times 1000}{200} = 100 \text{ A}$$

$$K = \frac{E_2}{E_1} = \frac{200}{2000} = 0.1$$

(i) Equivalent resistance and reactance referred to primary:

$$R_{01} = R_1 + R_2' = R_1 + \frac{R^2}{K^2} = 2.3 + \frac{0.025}{(0.1)^2} = 4.8\ \Omega$$

$$X_{01} = X_1 + X_2' = X_1 + \frac{X^2}{K^2} = 4.2 + \frac{0.04}{(0.1)^2} = 8.2\ \Omega$$

Equivalent resistance and reactance referred to secondary:

$$R_{02} = R_2 + R_1' = R_2 + K^2 R_1 = 0.025 + (0.1)^2 \times 2.3 = 0.048\ \Omega$$

$$X_{02} = X_2 + X_1' = X_2 + K^2 X_1 = 0.04 + (0.1)^2 \times 4.2 = 0.082\ \Omega$$

(ii) Full-load regulation at 0.8 pf lagging:

$$\%\ \text{regulation} = \frac{I_2 R_{02} \cos\phi + I_2 X_{02} \sin\phi}{E_2} \times 100$$

$$= \frac{100 \times 0.048 \times 0.8 + 100 \times 0.082 \times 0.6}{200} \times 100$$

$$= 4.38$$

Full-load efficiency at 0.8 pf lagging:

$$\%\ \eta = \frac{(x \times \text{full-load kVA} \times \text{pf})}{(x \times \text{full-load kVA} \times \text{pf}) + W_i + x^2 \times [W_{cu}]_{FL}} \times 100$$

where $x = 1$, $W_i = 0.2$ kW

$$[W_{cu}]_{FL} = (I_1)^2_{FL} R_{01} = (10)^2 \times 4.8 = 480\ \text{W} = 0.48\ \text{kW}$$

So,

$$\%\ \eta = \frac{1 \times 20 \times 0.8}{(1 \times 20 \times 0.8) + 0.2 + 0.48} \times 100$$

$$= 95.92$$

Example 4.18 A 20 kVA transformer has iron loss of 450 W and full-load copper loss of 900 W. If the pf of the load is 0.8 lagging, calculate (i) the full-load efficiency, (ii) the load at which maximum efficiency occurs, and (iii) the maximum efficiency.

Solution

Given: $W_i = 450$ W, $[W_{cu}]_{FL} = 900$ W, pf = 0.8 lagging

(i) Full-load efficiency:

$$\%\ \eta = \frac{(x \times \text{full-load kVA} \times \text{pf})}{(x \times \text{full-load kVA} \times \text{pf}) + W_i + x^2 [W_{cu}]_{FL}} \times 100$$

$$= \frac{(1 \times 20 \times 0.8)}{(1 \times 20 \times 0.8) + 0.45 + (1)^2 \times 0.9} \times 100$$

$$= 92.22$$

(ii) The load at which maximum efficiency occurs:

Let at x times full load, the efficiency is maximum

Then the value of x can be calculated as

$$x = \sqrt{\frac{W_i}{[W_{cu}]_{FL}}} = \sqrt{\frac{450}{900}} = 0.707$$

At 70.7% full load, maximum efficiency occurs.

(iii) Maximum efficiency:

$$\%\ \eta_{max} = \frac{(x \times \text{full-load kVA} \times \text{pf})}{(x \times \text{full-load kVA} \times \text{pf}) + 2W_i} \times 100$$

$$= \frac{(0.707 \times 20 \times 0.8)}{(0.707 \times 20 \times 0.8) + 2 \times 0.45} \times 100$$

$$= 92.63$$

Example 4.19 A 50 kVA, one-phase transformer has an efficiency of 98% at full-load, 0.8 pf and 97% at half-full load, 0.8 pf. Determine the full-load copper loss and iron loss. Find the load at which maximum efficiency occurs and maximum efficiency at unity pf.

Solution

Given: % efficiency at full-load 0.8 pf = 98

% efficiency at half-load 0.8 pf = 97

Full-load copper and iron losses:

% efficiency at full load 0.8 pf,

$$\%\ \eta = \frac{(x \times \text{full-load kVA} \times \text{pf})}{(x \times \text{full-load} \times \text{kVA}) + W_i + x^2 [W_{cu}]_{FL}} \times 100$$

or

$$98 = \frac{(1 \times 50 \times 0.8)}{(1 \times 50 \times 0.8) + W_i + (1)^2 [W_{cu}]_{FL}} \times 100$$

or

$$0.98 W_i + 0.98 [W_{cu}]_{FL} = 0.8 \qquad \text{(i)}$$

% efficiency at half load 0.8 pf,

$$\%\ \eta = \frac{x \times \text{full-load kVA} \times \text{pf}}{x \times \text{full-load kVA} \times \text{pf} + W_i + x^2 [W_{cu}]_{FL}} \times 100$$

or

$$97 = \frac{0.5 \times 50 \times 0.8}{(0.5 \times 50 \times 0.8) + W_i + (0.5)^2 [W_{cu}]_{FL}} \times 100$$

or

$$0.97 W_i + 0.2425 [W_w]_{FL} = 0.6 \qquad \text{(ii)}$$

From Eqs (i) and (ii),

$$W_i = 0.5527\ \text{kW}$$

and

$$[W_{cu}]_{FL} = 0.2636\ \text{kW}$$

Load at which maximum efficiency occurs:
Let at x times full load, the efficiency is maximum.
The value of x can be calculated as

$$x = \sqrt{\frac{W_i}{[W_{cu}]_{FL}}} = \sqrt{\frac{0.5527}{0.2636}} = 1.448$$

i.e., at 144.8% of full load, maximum efficiency occurs.
Maximum efficiency:

$$\% \eta_{max} = \frac{(x \times \text{full-load kVA} \times \text{pf})}{(x \times \text{full-load kVA} \times \text{pf}) + 2W_i} \times 100$$

$$= \frac{1.448 \times 50 \times 1}{(1.448 \times 50 \times 1) + 2 \times 0.5527} \times 100$$

$$= 98.496$$

Example 4.20 The efficiency of 200 kVA, 1100/230 V transformer is a maximum of 98% at 50% of rated load. Calculate (i) core loss, (ii) efficiency at rated load, and (iii) efficiency at a load of 75%. The power factor of the load is unity.

Solution
Given: $\eta_{max} = 98\%$, load = 50% of rated, i.e., half load, pf = 1 (unity).

(i) Core loss:
Maximum efficiency at half load,

$$\% \eta_{max} = \frac{(x \times \text{full load kVA} \times \text{pf})}{(x \times \text{full load kVA} \times \text{pf}) + 2W_i} \times 100$$

or $$98 = \frac{(0.5 \times 200 \times 1)}{(0.5 \times 200 \times 1) + 2W_i} \times 100$$

or $W_i = 1.020408$ kW
At η_{max}, $W_i = W_{cu}$.
So, $[W_{cu}]_{HL} = 1.020408$ kW

(ii) Efficiency at rated load:
First we calculate the copper loss at full load. As copper loss at half load is known, we can write

$$[W_{cu}]_{HL} = (0.5)^2 [W_{cu}]_{FL}$$

or $$1.020408 = (0.5)^2 [W_{cu}]_{FL}$$

So, $[W_{cu}]_{FL} = 4.08163$ kW

Now, $$\% \eta = \frac{(x \times \text{full-load kVA} \times \text{pf})}{(x \times \text{full-load kVA} \times \text{pf}) + W_i + x^2[W_{cu}]_{FL}} \times 100$$

$$= \frac{(1 \times 200 \times 1)}{(1 \times 200 \times 1) + 1.020408 + (1)^2 \times 4.08163} \times 100$$

$$= 97.51$$

(iii) Efficiency at a load of 75%:

$$\% \eta = \frac{(x \times \text{full-load kVA} \times \text{pf})}{(x \times \text{full-load kVA} \times \text{pf}) + W_i + x^2[W_{cu}]_{FL}} \times 100$$

$$= \frac{(0.75 \times 200 \times 1)}{(0.75 \times 200 \times 1) + 1.020408 + (0.75)^2 \times 4.08163} \times 100$$

$$= 97.84$$

Example 4.21 A 100 kVA transformer has 400 turns on the primary and 80 turns on the secondary. The primary and secondary resistances are 0.3 Ω and 0.01 Ω respectively and corresponding leakage reactances are 1.1 Ω and 0.035 Ω respectively. The supply voltage is 2200 V. Calculate (i) equivalent impedance referred to primary and (ii) voltage regulation and secondary terminal voltage for full load having a pf 0.8 leading.

Solution
Given: $N_1 = 400$ turns, $N_2 = 80$ turns, $R_1 = 0.3\ \Omega$, $R_2 = 0.01\ \Omega$,
$X_1 = 1.1\ \Omega$, $X_2 = 0.035\ \Omega$, $V_1 \cong E_1 = 2200$ V

So, we have $$K = \frac{N_2}{N_1} = \frac{80}{400} = 0.2$$

Also $$R_{01} = R_1 + R_2' = R_1 + \frac{R^2}{K^2} = 0.3 + \frac{0.01}{(0.2)^2} = 0.55\ \Omega$$

$$X_{01} = X_1 + X_2' = X_1 + \frac{X^2}{K^2} = 1.1 + \frac{0.035}{(0.2)^2} = 1.975\ \Omega$$

(i) $$Z_{01} = \sqrt{R_{01}^2 + X_{01}^2} = \sqrt{0.55^2 + 1.975^2} = 2.05\ \Omega$$

(ii) $$K = \frac{E_2}{E_1}$$

So, $E_2 = KE_1 = 0.2 \times 2200 = 440$ V
Full-load secondary current can be calculated as follows:

$$(I_2)_{FL} = \frac{\text{Full-load kVA} \times 1000}{E_2} = \frac{100 \times 1000}{440} = 227.3 \text{ A}$$

Now, $R_{02} = K^2 R_{01} = (0.2)^2 \times 0.55 = 0.022\ \Omega$
$X_{02} = K^2 X_{01} = (0.2)^2 \times 1.975 = 0.079\ \Omega$

Voltage regulation for full-load 0.8 leading pf:

$$\% \text{ regulation} = \frac{I_2 R_{02} \cos\phi - I_2 X_{02} \sin\phi}{E_2} \times 100$$

$$= \frac{227.3 \times 0.022 \times 0.8 - 227.3 \times 0.079 \times 0.6}{440} \times 100$$

$$= -1.54$$

Secondary terminal voltage V_2 can be calculated as follows:

$$\% \text{ regulation} = \frac{E_2 - V_2}{E_2} \times 100$$

or $$-1.54 = \frac{440 - V_2}{440} \times 100$$

So, $V_2 = 446.77$ V

Example 4.22 A 5 kVA, 1000/200 V, 50 Hz, single-phase transformer gave the following test results:

OC test (hv side) :	1000 V	0.24 A	90 W
SC test (hv side) :	50 V	5 A	110 W

Calculate (i) equivalent circuit of transformer with circuit constants, (ii) regulation at full load at 0.8 lagging pf, and (iii) kVA load for maximum efficiency.

Solution

(i) Equivalent circuit with circuit constants:

From oc test:

The test is conducted on primary side.

Given: $V_1 = 1000$ V, $I_0 = 0.24$ A, $W = 90$

We have $W = V_1 I_0 \cos\phi_0$

So, $$\cos\phi_0 = \frac{W}{V_1 I_0} = \frac{90}{1000 \times 0.24} = 0.375 \text{ lagging}$$

or $\sin\phi_0 = 0.927$

The working component of no-load current,

$$I_W = I_0 \cos\phi_0 = 0.24 \times 0.375 = 0.09 \text{ A}$$

The magnetizing component of no-load current,

$$I_\mu = I_0 \sin\phi_0 = 0.24 \times 0.927 = 0.222 \text{ A}$$

$$R_0 = \frac{V_1}{I_W} = \frac{1000}{0.09} = 11111\ \Omega$$

$$X_0 = \frac{V_1}{I_\mu} = \frac{1000}{0.222} = 4504.5\ \Omega$$

From SC test:

The test is conducted on primary side.

Given: $V_{sc} = 50$ V, $I_1 = 5$ A, $W = 110$ W

We have $W = I_1^2 R_{01}$

or $$R_{01} = \frac{W}{I_1^2} = \frac{110}{(5)^2} = 4.4\ \Omega$$

$$Z_{01} = \frac{V_{sc}}{I_1} = \frac{50}{5} = 10\ \Omega$$

$$X_{01} = \sqrt{Z_{01}^2 - R_{01}^2} = \sqrt{10^2 - 4.4^2} = 8.98\ \Omega$$

Figure 4.31 shows the equivalent circuit with circuit constants.

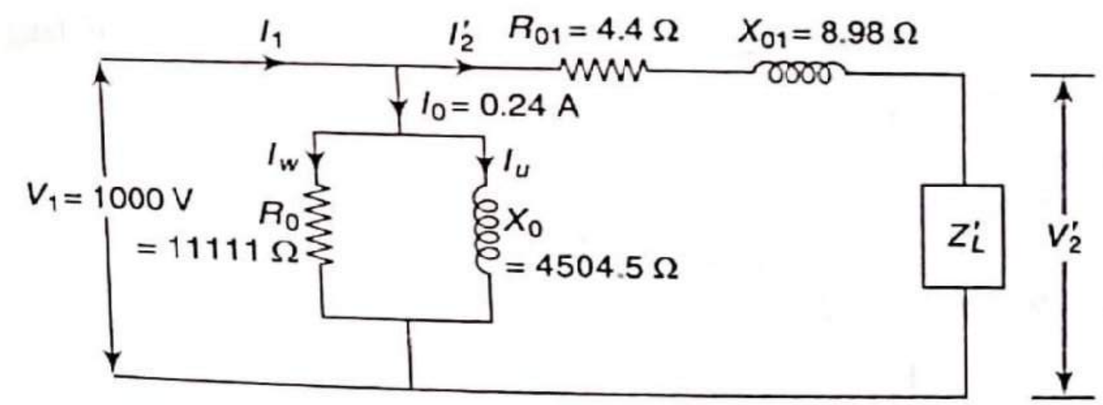

Fig. 4.31

(ii) Regulation of full-load 0.8 lagging pf:

$$(I_2)_{FL} = \frac{\text{kVA rating} \times 1000}{E_2} = \frac{5 \times 1000}{200} = 25 \text{ A}$$

$$K = \frac{E_2}{E_1} = \frac{200}{1000} = 0.2$$

$$R_{02} = K^2 R_{01} = (0.2)^2 \times 4.4 = 0.176\ \Omega$$

$$X_{02} = K^2 X_{01} = (0.2)^2 \times 8.98 = 0.36\ \Omega$$

Power factor $= \cos\phi = 0.8$, $\sin\phi = 0.6$

So, $$\% \text{ regulation} = \frac{I_2 R_{02} \cos\phi + I_2 X_{02} \sin\phi}{E_2} \times 100$$

$$= \frac{25 \times 0.176 \times 0.8 + 25 \times 0.36 \times 0.6}{200} \times 100$$

$$= 4.46$$

(iii) kVA load for maximum efficiency:

From oc test, $W_i = 90$ W

$$(I_1)_{FL} = \frac{\text{kVA rating} \times 1000}{E_1} = \frac{5 \times 1000}{1000} = 5 \text{ A}$$

So, $[W_{cu}]_{FL} = (I_1)^2_{FL} R_{01} = (5)^2 \times 4.4 = 110$ W

$$\text{kVA at } \eta_{max} = \text{full-load kVA} \sqrt{\frac{W_i}{[W_{cu}]_{FL}}}$$

$$= 5 \times \sqrt{\frac{90}{110}}$$

$$= 4.52$$

Example 4.23 Obtain equivalent circuit of a 200/400 V, 50 Hz, single-phase transformer from the following test data:

OC test:	200 V	0.7 A	70 W	(on lv side)
SC test :	15 V	10 A	85 W	(on hv side)

Calculate the secondary voltage when delivering 5 kW at 0.8 pf lagging, the primary voltage being 200 V.

Solution

From oc test:

The readings are: $V_1 = 200$ V, $I_0 = 0.7$ A, $W = 70$ W

We have $W = V_1 I_0 \cos \phi_0$

So, $$\cos \phi_0 = \frac{W}{V_1 I_0} = \frac{70}{200 \times 0.7} = 0.5$$

and $\sin \phi_0 = 0.866$

Also $I_W = I_0 \cos \phi_0 = 0.7 \times 0.5 = 0.35$ A

$I_\mu = I_0 \sin \phi_0 = 0.7 \times 0.866 = 0.606$ A

$$R_0 = \frac{V_1}{I_W} = \frac{200}{0.35} = 571.4\ \Omega$$

$$X_0 = \frac{V_1}{I_\mu} = \frac{200}{0.606} = 330\ \Omega$$

From sc test:

It may be noted that this test is conducted on hv side, i.e., instruments are placed on secondary, and primary has been short-circuited.

The readings are $V_{sc} = 15$ V, $I_2 = 10$ A, $W = 85$ W

We have $W = I_2^2 R_{02}$

So, $$R_{02} = \frac{W}{I_2^2} = \frac{85}{10^2} = 0.85\ \Omega$$

$$Z_{02} = \frac{V_{sc}}{I_2} = \frac{15}{10} = 1.5\ \Omega$$

So, $$X_{02} = \sqrt{Z_{02}^2 - R_{02}^2} = \sqrt{1.5^2 - 0.85^2} = 1.24\ \Omega$$

Now, $$R_{01} = \frac{R_{02}}{K^2} = \frac{0.85}{\left(\frac{400}{200}\right)^2} = \frac{0.85}{(2)^2} = 0.21\ \Omega$$

$$X_{01} = \frac{X_{02}}{K^2} = \frac{1.24}{(2)^2} = 0.31\ \Omega$$

The equivalent circuit is shown in Fig. 4.32.

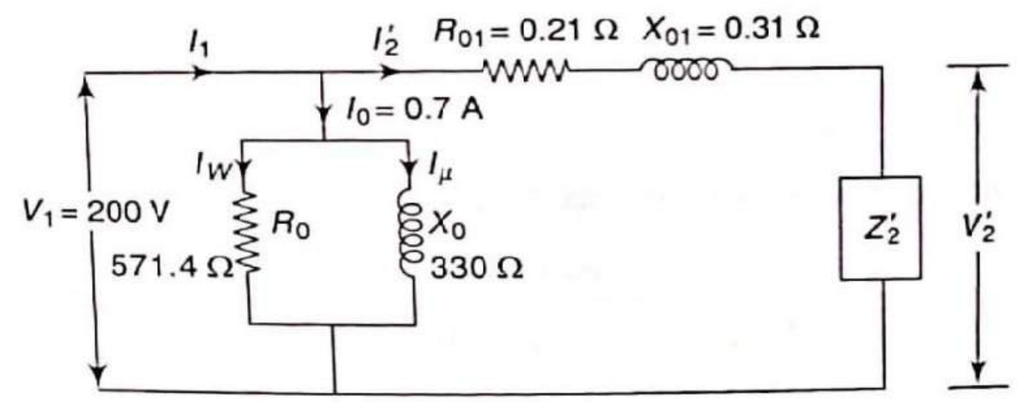

Fig. 4.32

Secondary current, when delivering 5 kW at 0.8 pf lagging is calculated as follows:

$$\text{Output kVA} = \frac{\text{kW}}{\text{pf}}$$

or $$\frac{E_2 I_2}{1000} = \frac{5}{0.8}$$

or $$\frac{400 \times I_2}{1000} = \frac{5}{0.8}$$

or $I_2 = 15.63$ A

Total voltage drop as referred to secondary,

$$E_2 - V_2 = I_2 R_{02} \cos \phi + I_2 X_{02} \sin \phi$$

or $$400 - V_2 = 15.63 \times 0.85 \times 0.8 + 15.63 \times 1.24 \times 0.6$$

So, $V_2 = 377.7$ V

Example 4.24 A 50 kVA, 2200/220 V, 50 Hz, single-phase transformer gave the following test results:

OC test (hv side) :	2200 V	0.5 A	1000 W
SC test (hv side) :	100 V	20 A	500 W

Calculate (i) efficiency at full-load 0.8 lagging pf and (ii) maximum efficiency at 0.8 pf and load at maximum efficiency.

Solution

From oc test, $W_i = 1000$ W

The sc test is conducted on hv side, i.e., primary side.

The full-load primary current,

$$(I_1)_{FL} = \frac{\text{kVA rating} \times 1000}{E_1} = \frac{50 \times 1000}{2200} = 22.73 \text{ A}$$

Short-circuit test data have been given at 20 A current on primary side. Since short-circuit current and full-load current are different, the cu loss at full load should be calculated as

$$[W_{cu}]_{FL} = \left(\frac{22.73}{20}\right)^2 \times 500$$

$$= 645.81 \text{ W}$$

(i) Efficiency at full-load 0.8 lagging pf:

$$\% \eta = \frac{(x \times \text{full-load kVA} \times \text{pf})}{(x \times \text{full-load kVA} \times \text{pf}) + W_i + x^2 [W_{cu}]_{FL}} \times 100$$

$$= \frac{(1 \times 50 \times 0.8)}{(1 \times 50 \times 0.8) + 1 + (1)^2 \times 0.64581} \times 100$$

$$= 96.048$$

(ii) The load at maximum efficiency:

$$x = \sqrt{\frac{W_i}{[W_{cu}]_{FL}}} = \sqrt{\frac{1000}{645.81}} = 1.244$$

Maximum efficiency,

$$\% \eta_{max} = \frac{(x \times \text{full-load kVA} \times \text{pf})}{(x \times \text{full-load kVA} \times \text{pf}) + 2W_i} \times 100$$

$$= \frac{(1.244 \times 50 \times 0.8)}{(1.244 \times 50 \times 0.8) + 2(1)} \times 100$$

$$= 96.14$$

Example 4.25 Open-circuit and short-circuit tests on a 5 kVA, 200/400 V, 50 Hz, single-phase transformer gave the following test results:

OC test:	200 V	1 A	100W	(carried on lv side)
SC test :	15 V	10 A	85 W	(with primary short circuited)

(i) Draw the equivalent circuit referred to primary. (ii) Calculate the approximate regulation of a transformer at full-load 0.8 pf lagging and at full-load 0.8 pf leading.

Solution

(i) Equivalent circuit referred to primary:

From oc test:

The test is carried on lv side, i.e., primary side. The instrument readings are:

$V_1 = 200$ V, $I_0 = 1$ A, $W = 100$ W

We have $W = V_1 I_0 \cos \phi_0$

So, $$\cos \phi_0 = \frac{W}{V_1 I_0} = \frac{100}{200 \times 1} = 0.5$$

and $\sin \phi_0 = 0.866$

Now, $I_W = I_0 \cos \phi_0 = 1 \times 0.5 = 0.5$ A

$I_\mu = I_0 \sin \phi_0 = 1 \times 0.866 = 0.866$ A

Hence, $$R_0 = \frac{V_1}{I_W} = \frac{200}{0.5} = 400\ \Omega$$

$$X_0 = \frac{V_1}{I_\mu} = \frac{200}{0.866} = 231\ \Omega$$

From sc test:

In sc test, primary side is short-circuited, i.e., the test is carried on secondary side. The readings are given as $V_{sc} = 15$ V, $I_2 = 10$ A, and $W = 85$ W

Now, $W = I_2^2 R_{02}$

So, $$R_{02} = \frac{W}{I_2^2} = \frac{85}{(10)^2} = 0.85\ \Omega$$

$$Z_{02} = \frac{V_{sc}}{I_2} = \frac{15}{10} = 1.5\ \Omega$$

$$X_{02} = \sqrt{Z_{01}^2 - R_{02}^2} = \sqrt{1.5^2 - 0.85^2} = 1.236\ \Omega$$

$$K = \frac{E_2}{E_1} = \frac{400}{100} = 2$$

So, $$R_{01} = \frac{R_{02}}{K^2} = \frac{0.85}{(2)^2} = 0.2125\ \Omega$$

$$X_{01} = \frac{X_{02}}{K^2} = \frac{1.236}{(2)^2} = 0.309\ \Omega$$

The equivalent circuit referred to primary is as shown in Fig. 4.33.

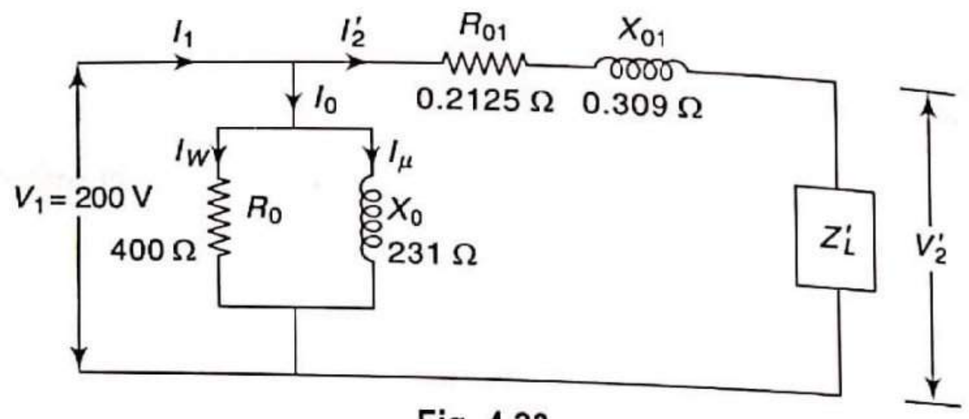

Fig. 4.33

(ii) Regulation at full load:

At 0.8 pf lagging:

$$(I_2)_{FL} = \frac{\text{kVA rating} \times 1000}{E_2} = \frac{5 \times 1000}{400} = 12.5 \text{ A}$$

$$\% \text{ regulation} = \frac{I_2 R_{02} \cos\phi + I_2 X_{02} \sin\phi}{E_2} \times 100$$

$$= \frac{12.5 \times 0.85 \times 0.8 + 12.5 \times 1.236 \times 0.6}{400} \times 100$$

$$= 4.44$$

At 0.8 pf leading:

$$\% \text{ regulation} = \frac{I_2 R_{02} \cos\phi - I_2 X_{02} \sin\phi}{E_2} \times 100$$

$$= \frac{12.5 \times 0.85 \times 0.8 - 12.5 \times 1.236 \times 0.6}{400} \times 100$$

$$= -0.19$$

Example 4.26 A 250/500 V, single-phase transformer gave the following test results:

Short-circuit test with low-voltage winding short circuited: 20 V, 12 A, 100 W

Open-circuit test: 250 V, 1 A, 80 W on low-voltage side.

Find the efficiency, when the output is 10 A at 500 V at 0.8 pf lag.

Solution

Since oc test is carried out by applying rated voltage (250 V) on lv side (primary) with hv side open circuited, the wattmeter reading gives the core loss corresponding to normal voltage, i.e.,

core (or iron) loss = 80 W

The sc test is carried out with lv winding (primary) short-circuited, i.e., it is carried out on secondary side. (The current circuited on secondary side = 12 A and power input = 100 W.)

So, copper loss corresponding to 12 A = 100 W

Now, efficiency at 10 A load is required.

So, copper loss corresponding to 10 A $= \left(\frac{10}{12}\right)^2 \times 100 = 69.44$ W

Hence, efficiency at 10 A, 0.8 pf and 500 V,

$$\% \eta = \frac{\text{Output power}}{\text{Output power + Iron loss + Copper loss}} \times 100$$

$$= \frac{(500 \times 10 \times 0.8)}{(500 \times 10 \times 0.8) + 80 + 69.44} \times 100$$

$$= 96.4$$

Example 4.27 A 25 kVA single-phase transformer has load cycle for a day as follows:

(i) 15 kW at 0.8 pf for 6 hours
(ii) 20 kW at 0.9 pf for 10 hours
(iii) 10 kW at 0.9 pf for 4 hours
(iv) No-load condition for 4 hours

The iron loss is 400 W and the full-load copper loss is 500 W. Calculate the all-day efficiency of the transformer.

Solution

The copper loss at different load condition can be calculated as follows.

(i) When load is 15 kW, load kVA will be

$$\text{kVA} = \frac{\text{kW}}{\cos\phi} = \frac{15}{0.8} = 18.75$$

The load corresponding to 18.75 kVA,

$$x = \frac{\text{load kVA}}{\text{full-load kVA}} = \frac{18.75}{25} = 0.75$$

So, copper loss $= (0.75)^2 \times [W_{cu}]_{FL}$
$= (0.75)^2 \times 500$
$= 281.25$ W

(ii) When load is 20 kW, load kVA will be

$$\text{load kVA} = \frac{\text{kW}}{\cos\phi} = \frac{20}{0.9} = 22.222$$

So, the load corresponding to 22.222 kVA,

$$x = \frac{\text{load kVA}}{\text{full-load kVA}} = \frac{22.222}{25}$$

So, copper loss $= \left(\frac{22.222}{25}\right)^2 \times 500 = 359.053$ W

(iii) When load is 10 kW, load kVA will be

$$\text{load kVA} = \frac{\text{kW}}{\cos\phi} = \frac{10}{0.9} = 11.111$$

So, the load corresponding to 11.111 kVA,

$$x = \frac{\text{load kVA}}{\text{full-load kVA}} = \frac{11.111}{25}$$

$$\text{So, copper loss} = \left(\frac{11.11}{25}\right)^2 \times 500 = 98.765 \text{ W}$$

(iv) When transformer is at no-load condition, copper loss will be practically zero.

Total energy spent because of copper loss in a day

$= 281.25 \times 6 + 395.053 \times 10 + 98.765 \times 4 + 0$

$= 6.03309$ kWh

Total energy spent because of iron loss in a day

$= 400 \times 24$

$= 9.6$ kWh

Energy output in a day $= 15 \times 6 + 20 \times 10 + 10 \times 4$

$= 330$ kWh

Hence, all-day efficiency

$$\eta_{\text{all day}} = \frac{\text{Energy output}}{\text{Energy output} + \begin{pmatrix}\text{Energy}\\ \text{spent in}\\ \text{iron loss}\end{pmatrix} + \begin{pmatrix}\text{Energy}\\ \text{spent in}\\ \text{copper loss}\end{pmatrix}} \times 100$$

(for 24 hours)

$$= \frac{330}{330 + 9.6 + 6.03309} \times 100 = 95.48\%$$

Example 4.28 Find the all-day efficiency of a 500 kVA distribution transformer, whose copper loss and iron loss at full load are 4.5 kW and 3.5 kW respectively. During a day of 24 hours, it is loaded as under:

No. of hours	Loading in kW	Power Factor
6	400	0.8
10	300	0.75
4	100	0.8
4	0	0.8

Solution

Copper loss at different load condition can be calculated as follows.

When load is 400 kW, the load kVA will be

$$\text{kVA} = \frac{\text{kW}}{\text{pf}} = \frac{400}{0.8} = 500$$

Load kVA is equal to full-load kVA

So, copper load = 4.5 kW

When load is 300 kW, the load kVA will be

$$\text{kVA} = \frac{\text{kW}}{\text{pf}} = \frac{300}{0.75} = 400$$

$$\text{So, copper loss} = \left(\frac{400}{500}\right)^2 \times 4.5 = 2.88 \text{ kW}$$

When load is 100 kW, the load kVA will be

$$\text{kVA} = \frac{\text{kW}}{\text{pf}} = \frac{100}{0.8} = 125$$

$$\text{So, copper loss} = \left(\frac{125}{100}\right)^2 \times 4.5 = 0.281 \text{ kW}$$

When load is 0 kW, copper loss is also 0 kW.

Total energy spent because of copper loss in a day

$= (4.5 \times 6) + (2.88 \times 10) + (0.281 \times 4) + (0 \times 4)$

$= 56.924$ kWh

The iron loss takes place throughout the day irrespective of the load on the transformer because its primary side is energized all the 24 hours.

Hence, total energy spent because of iron loss in a day $= 3.5 \times 24 = 84$ kWh

Energy output in a day $= (400 \times 6) + (300 \times 10) + (100 \times 4) + (0 \times 4)$

$= 5800$ kWh

$$\text{Hence, } \eta_{\text{all day}} = \frac{\text{Output energy}}{\text{Output energy} + \begin{matrix}\text{Energy spent}\\ \text{in iron loss}\end{matrix} + \begin{matrix}\text{Energy spent}\\ \text{in copper loss}\end{matrix}} \times 100$$

(for a day)

$$= \frac{5800}{5800 + 84 + 56.924} \times 100$$

$= 97.63\%$

Example 4.29 A transformer has its maximum efficiency of 0.98 at 15 kVA at unity power factor. During the day, it is loaded as under:

(i) 2 kW at 0.5 pf for 12 hours

(ii) 12 kW at 0.8 pf for 6 hours

(iii) 18 kW at 0.9 pf for 6 hours

Find the all-day efficiency.

Solution

Given: η_{max} at unity pf = 0.98

kVA at $\eta_{max} = 15$

So, $$\eta_{max} = \frac{\text{kVA at } \eta_{max} \times \text{pf}}{(\text{kVA at } \eta_{max} \times \text{pf}) + 2W_i} \qquad (\because \text{At } \eta_{max}, W_i = W_{cu})$$

or $$0.98 = \frac{15 \times 1}{15 \times 1 + 2W_i}$$

So, $W_i = 0.153$ W

and $W_{cu} = 0.153$ W $\quad (\because W_i = W_{cu})$

i.e., the copper loss at 15 kVA is 0.153 kW.

The copper loss at different load conditions can be calculated as follows.

(i) When load is 2 kW, load kVA will be

$$\text{kVA} = \frac{\text{kW}}{\text{pf}} = \frac{2}{0.5} = 4$$

We know that copper loss corresponding to 15 kVA = 0.153 kW.
So, copper loss corresponding to 4 kVA

$$= \left(\frac{4}{15}\right)^2 \times 0.153 = 0.01088 \text{ kW}$$

(ii) When load is 12 kW, load kVA will be

$$\text{kVA} = \frac{\text{kW}}{\text{pf}} = \frac{12}{0.8} = 15 \text{ kVA}$$

So, copper loss = 0.153 kVA

(iii) When load is 18 kW, load kVA will be

$$\text{kVA} = \frac{\text{kW}}{\text{pf}} = \frac{18}{0.9} = 20$$

So, copper loss $= \left(\frac{20}{15}\right)^2 \times 0.153 = 0.272$ kW

Thus, total energy spent because of cu loss in a day
$= (0.01088 \times 12) + (0.153 \times 6) + (0.272 \times 6)$
$= 2.68056$ kWh

Also total energy spent because of iron loss in a day
$= 0.153 \times 24$
$= 3.672$ kWh

Total output energy in a day $= (2 \times 12) + (12 \times 6) + (18 \times 6)$
$= 204$ kWh

So, $$\%\,\eta_{\text{all day}} = \frac{204}{204 + 3.672 + 2.68056} \times 100$$
$$= 96.98$$

Example 4.30 A 100 kVA lighting transformer has a full-load loss of 3 kW, the loss being equally divided between iron and copper. During a day, the transformer operates on full load for 3 hours, one-half load for 4 hours, the output being negligible for the remainder of the day. Calculate the all-day efficiency.

Solution

The lighting transformer always operates at unity pf.

Copper loss = 1.5 kW

Iron (or core) loss = 1.5 kW

Copper loss at different load conditions can be calculated as follows.

Copper loss for 3 hours on full load = 1.5 kW

Copper loss for 4 hours on one-half load $= \left(\frac{1}{2}\right)^2 \times 1.5 = 0.375$ kW

Copper loss for remainder of the day = 0 kW

Hence, total energy spent because of cu loss in a day
$= (1.5 \times 3) + (0.375 \times 4) = 6$ kWh

and total energy spent because of iron loss $= (1.5 \times 24) = 36$ kWh

Total output energy in a day can be calculated as follows.

Output power for 3 hours on full load $= (x \times \text{full-load kVA} \times \text{pf})$
$= (1 \times 100 \times 1) = 100$ kW

Output power for 4 hours on half load $= (x \times \text{full-load kVA} \times \text{pf})$
$= (0.5 \times 100 \times 1)$
$= 50$ kW

So, total output energy $= (100 \times 3) + (50 \times 4) + 0 = 500$ kWh

This gives $$\%\,\eta_{\text{all day}} = \frac{500}{500 + 36 + 6} \times 100$$
$$= 92.25$$

EXERCISES 4.2

1. Explain the voltage regulation of a transformer.
2. Derive the expression for the approximate voltage regulation.
3. Draw and explain the equivalent circuit of a transformer.
4. Develop the equivalent circuit of a transformer.
5. Explain the efficiency of a transformer.
6. Derive the condition for the maximum efficiency of a transformer.
7. Explain the all-day efficiency of a transformer.
8. Compare ordinary efficiency and all-day efficiency.
9. What are the purposes of conducting the OC test.
10. What are the purposes of conducting the SC test.
11. With a neat circuit diagram, explain procedure of conducting the OC test.
12. With a neat circuit diagram, explain procedure of conducting the SC test.

13. The wattmeter reads iron losses in oc test and reads copper losses in sc test of a transformer. Why?
14. What information can be obtained by conducting the oc and sc tests in a transformer?
15. Define regulation of a transformer. How does it vary with the load current?
16. Give reasons for the following:
    (i) Efficiency of a transformer is high compared to other electrical machines.
    (ii) The core of a transformer is laminated.
17. A 100 kVA transformer has iron loss of 600 W and full-load copper loss of 1500 W. Calculate the efficiency at half-load unity pf and full-load 0.8 pf lagging. [*Ans.* 98.09%; 97.44%]
18. A 100 kVA transformer has iron loss of 2 kW and full-load copper loss of 1 kW. Calculate the efficiency at (i) full-load unity pf, (ii) half-load 0.8 pf lagging, and (iii) quarter load 0.8 pf leading. [*Ans.* (i) 97.09%, (ii) 94.674%, (iii) 90.65%]
19. A 600 kVA, single-phase transformer has an efficiency of 92% at both full load and half load at unity pf. Determine the efficiency at 75% of full load, 0.9 pf lagging. [*Ans.* 91.64%]
20. A 100 kVA, 440/220 V, single-phase, 50 Hz core-type transformer has an efficiency of 98.5% when supplying full load at 0.8 power factor lagging and an efficiency of 99% when supplying half load at unity power factor. Find the iron loss and copper loss at full load. [*Ans.* 267.3 W; 950.9 W]
21. A 150 kVA transformer has iron loss of 1.4 kW and full-load copper loss of 1.6 kW. Determine (i) the kVA load at maximum efficiency and the maximum efficiency at 0.8 lagging power factor and (ii) the efficiency at half full load and 0.8 lagging pf. [*Ans.* (i) 140.31 kVA, 97.57%, (ii) 97.09%]
22. A 230/460 V transformer has a primary resistance of 0.2 Ω and reactance of 0.5 Ω and the corresponding values for the secondary are 0.75 Ω and 1.8 Ω respectively. Find the secondary terminal voltage when supplying 10 A at 0.8 pf lagging. [*Ans.* 424.8 V]
23. A 10 kVA, 400/230 V, 50 Hz, single-phase transformer on test gives the following results with instruments connected on hv side:

OC test:	400 V	2 A	100 W
SC test :	25 V	25 A	80 W

Find out the percentage regulation at full-load 0.8 lagging pf and efficiency. [*Ans.* 4.36%; 97.79%]

24. A 1000/200 V, 50 Hz, single-phase transformer gave the following test results:

OC test (hv side) :	1000 V	0.24 A	90 W
SC test (hv side) :	50 V	5 A	110 W

The regulation of the transformer at full load at power factor 0.8 lag is 4.46%.

Find (i) rating of the transformer, (ii) equivalent circuit of transformer with circuit constants, and (iii) kVA load for maximum efficiency.
[*Ans.* (i) 5 kVA, (ii) 11111 Ω, 4504.5 Ω, 4.4 Ω, 8.98 Ω, (iii) 4.52 kVA]

25. Test data on a single-phase, 250/500 V, 50 Hz transformer are as under:

OC test:	250 V	1 A	80 W	(carried on lv side)
SC test :	20 V	12 A	100 W	(carried on lv side)

Determine equivalent circuit of transformer with circuit constants.
[*Ans.* 781 Ω; 264 Ω; 0.694 Ω; 1.51 Ω]

26. Open-circuit and short-circuit tests were conducted on a 50 kVA, 6360/240 V, 50 Hz, single-phase transformer in order to find its efficiency. The findings during these tests are as under:

OC test:	6360 V	1 A	2 kW	(carried on hv side)
SC test :	180 V	175 A	2 kW	(carried on lv side)

Calculate the efficiency of the transformer when supplying full load at pf of 0.8 lagging. [*Ans.* 89.23%]

27. The corrected instruments readings obtained from open- and short-circuit tests on 10 kVA, 450/120 V, 50 Hz transformer are as given below:
    OC test: $V_2 = 120$ V, $I_0 = 4.2$ A, $W = 80$ W
    (with high-voltage winding open circuited)
    SC test: $V_{sc} = 9.65$ V, $I_1 = 22.2$ A, $W = 120$ W
    (with low-voltage winding short circuited)
    Determine (i) the equivalent circuit constants, (ii) efficiency and regulation at full load for an 80% lagging power factor load, and (iii) the efficiency at half full-load and 80% lagging power factor load.
    [*Ans.* (i) 2531 Ω, 407 Ω, 0.243 Ω, 0.36 Ω, (ii) 97.56%, 2.04%, (iii) 97.32%]
28. A 50 kVA single-phase transformer has load cycle for a day as follows:
    50 kVA at 0.8 lag pf for 10 hours
    25 kVA at 0.6 lag pf for 10 hours
    No load for 4 hours
    The iron loss is 1000 W and the full-load copper loss is 1200 W. Calculate the all-day efficiency of the transformer. [*Ans.* 93.38%]
29. A 5 kVA distribution transformer has full-load efficiency at unity power factor of 95%, the copper and iron losses being equal. Calculate its all-day efficiency if it is loaded throughout the 24 hours as follows:
    (i) No load for 10 hours (ii) Quarter load for 7 hours
    (iii) Half load for 5 hours (iv) Full load for 2 hours
    Assume load pf of unity. [*Ans.* 89.53%]
30. A transformer has its maximum efficiency of 0.98 at 15 kVA at unity pf. During the day, it is loaded as follows:
    12 hours : 2 kW at 0.8 pf
    6 hours : 12 kW at 0.8 pf
    6 hours : at no load
    Calculate the all-day efficiency of the transformer. [*Ans.* 95.39%]

Chapter 5

DC Machines

5.1 Introduction

Electrical energy is one form of energy that is most flexible and can be easily controlled. It can be converted into other forms of energy and converted back from other energy forms. Thus, energy conversion devices are required both at the generating end and the receiving end of the electrical power systems. At the generating end, energy obtained from a natural source (e.g., heat, water, or nuclear energy) is first converted into electrical energy, transmitted to the load centre, and then converted into required form of energy (e.g., heat, sound, light, mechanical, or chemical energy).

In generating stations (such as hydroelectrical and diesel-electric power stations), mechanical or thermal energy is converted into electrical energy with the help of generators. When electrical energy is available and mechanical work is to be done by it, a device called electrical motor is needed, which converts electrical energy into mechanical energy.

Thus, the **electrical machines**—generators and motors—are devices that transform mechanical power into electrical power and vice versa. This chapter incorporates a discussion of electrical machines. A special emphasis is given on their basic principles, working, types, and applications.

5.2 Principle and Working of DC Machines

Electrical machines related to electrical energy of direct type are called dc machines. These machines are classified as dc generator and dc motor.

A **dc generator** is a machine that converts mechanical energy (or power) into electrical energy (or power), whereas a **dc motor** is a machine that converts electrical energy (or power) into mechanical energy (or power). From construction point of view, there is no basic difference between a dc generator and a dc motor. Any dc machine can act as a dc generator or a dc motor.

5.2.1 DC generator

Working principle

A dc generator works on the principle of Faraday's law of electromagnetic induction that states that when a conductor cuts the magnetic flux lines, an emf is induced in it, called dynamically induced emf. The direction of the induced emf can be determined by the Fleming's right hand rule and the magnitude of the induced emf is given by

$$e = B\,l\,v\,\sin\theta \text{ volt}$$

where B = flux density in Wb/m^2

l = active length of the conductor in m

v = relative velocity of the conductor in m/s

θ = angle between the direction of motion of the conductor and the magnetic field

According to Fleming's right hand rule, if three fingers of right hand, namely thumb, index finger and middle finger, are outstretched so that they are mutually perpendicular to each other, and if the index finger is made to point in the direction of magnetic field, the thumb in the direction of motion of the conductor, then the outstretched middle finger gives the direction of the emf induced in the conductor.

Consider the arrangement as shown in Fig. 5.1(a). If we move the conductor in a magnetic field in a direction at right angle to the field as shown in Fig. 5.1(a), it cuts the flux lines, and emf is induced in it, called dynamically induced emf (as conductor is in motion). By applying the Fleming's right hand rule, it is found that the direction of the induced current (or induced emf) is out of the plane. This direction is shown by putting the dot inside the cross section of the conductor.

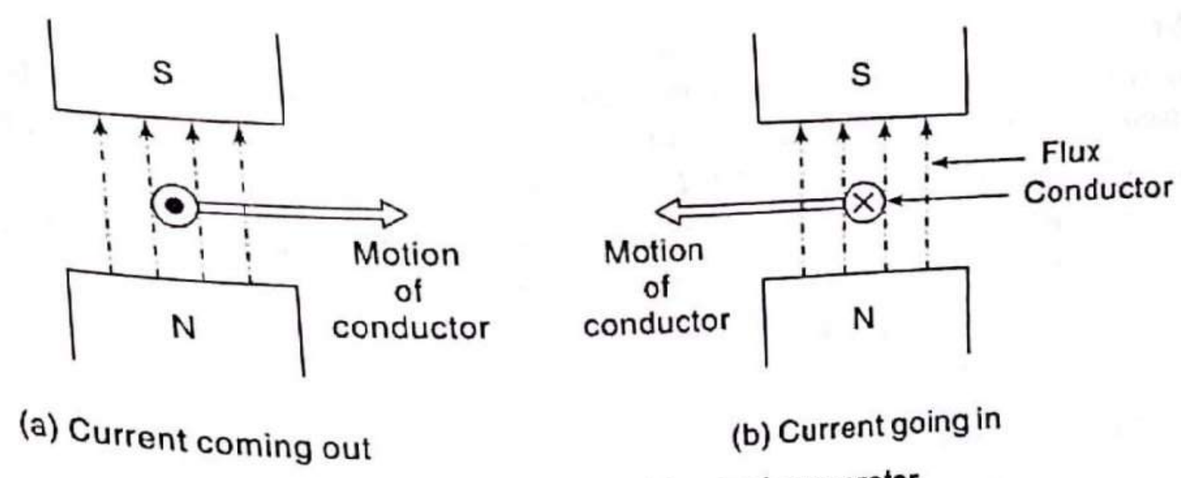

Fig. 5.1 Working principle of a dc generator

It is seen that reversal of direction of motion of the conductor reverses the direction of the induced current [see Fig. 5.1(b)].

Working

Figure 5.2 shows the schematic diagram of a simple dc generator consisting of a rectangular copper coil *ABCD* mounted on a shaft and rotating about its own axis (shaft) in a magnetic field produced by permanent magnets. The coil is rotated

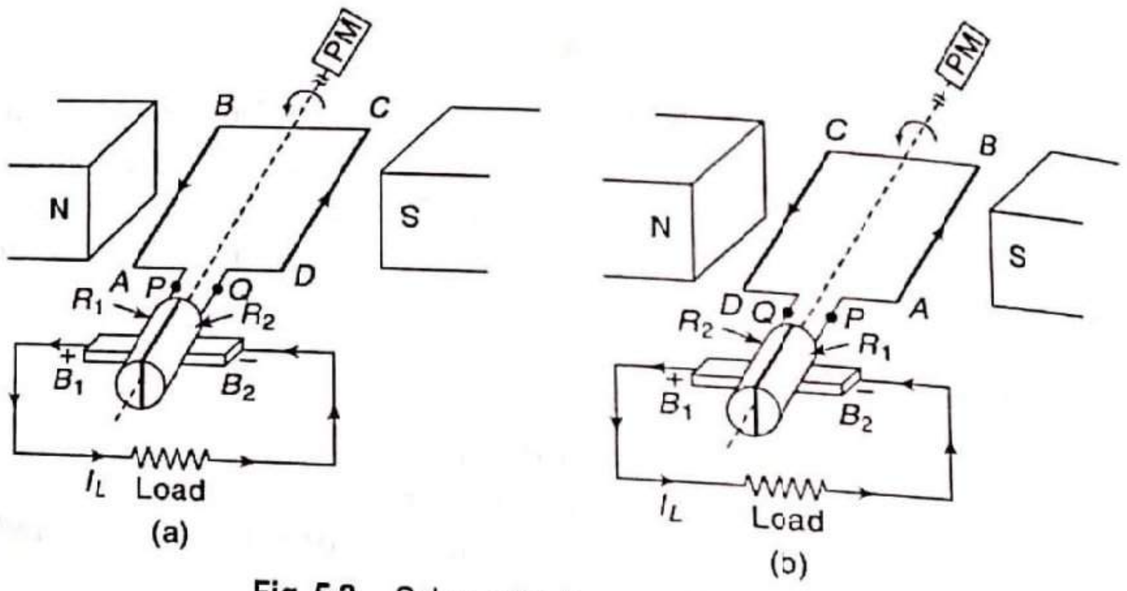

Fig. 5.2 Schematic diagram of a dc generator

with constant angular velocity by means of a prime mover[1] (PM). The coil has two identical conductors AB and CD. The two ends of the coil P and Q are connected permanently to two commutator[2] segments R_1 and R_2 respectively. The commutator segments are well insulated from each other. The commutator is placed on the same shaft and rotates along with the coil. Two stationary carbon brushes B_1 and B_2 are pressed against the commutator. These brushes are further connected to the external load circuit. Their function is to collect the current induced in the coil and deliver it to the external circuit.

Let the coil be rotated in an anticlockwise direction with constant angular velocity. So, its conductors AB and CD cut the lines of flux and according to Faraday's law of electromagnetic induction, an emf get induced in them.

Now, emf induced in one conductor $= B\,l\,v \sin\theta$ volt

By Fleming's right hand rule, it is seen that at any instant, the emf's induced in the two conductors are additive in nature. As the coil has two identical conductors, emf induced in the coil, $v_{PQ} = 2B\,l\,v \sin\theta$ volt (5.1)

When $\theta = 90°$, emf induced is maximum. The maximum value of induced emf is expressed by V_m. Thus, when $\theta = 90°$, $v = V_m$.

So, $V_m = 2\,B\,l\,v \sin 90°$

or $V_m = 2\,B\,l\,v$

Now, Eq. (5.1) becomes

$$v_{PQ} = V_m \sin\theta \text{ volt} \tag{5.2}$$

Equation (5.2) gives the instantaneous value of the voltage induced in the coil, which appears across the coil terminals P and Q. This voltage is a sinusoidal alternating voltage as shown in Fig. 5.3.

[1]The prime mover, which drives the generator, may be a turbine, a diesel engine, or some type of motor.

[2]A commutator is a cylindrical drum mounted on a shaft. The surface of the drum is made of a large number of segments of harddrawn copper.

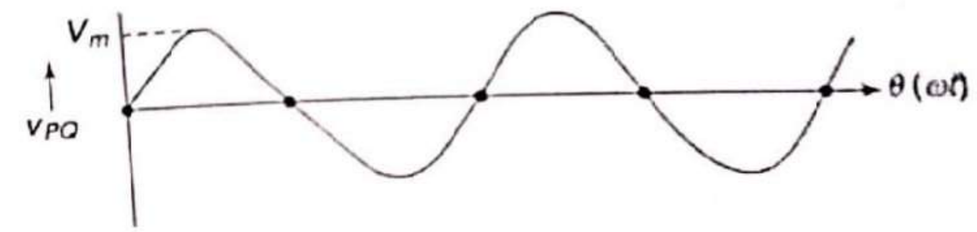

Fig. 5.3 Voltage induced in the coil of a dc generator

The direction of the induced emf can be determined by Fleming's right hand rule. In Fig. 5.2(a), as the conductor AB of the coil $ABCD$ moves downward and CD moves upward, the direction of the induced emf in the coil is along $DCBA$. The coil terminal P (i.e., commutator segment R_1) is positive and the coil terminal Q (i.e., commutator segment R_2) is negative. The current in the external load circuit flows from brush B_1 to brush B_2. The direction of the current remains the same for half revolution of the coil starting from its vertical position. In the next half revolution [see Fig. 5.2(b)], the direction of the induced current is reversed and the coil terminal Q (i.e., commutator segment R_2) is positive and the coil terminal P (i.e., commutator segment R_1) is negative. As the commutator segments interchange their positions, the current direction in the external load circuit remains same, i.e., from brush B_1 to brush B_2.

The commutator segments are so arranged that during half revolution of the coil, each segment remains in contact with a particular brush, whereas during the next half cycle, when the current is reversed, the same segment is in contact with the other brush. It is seen that in the first half revolution [Fig. 5.2(a)], brush B_1 in contact with segment R_1 acts as the positive end of the supply and brush B_2 acts as the negative end. In the next half revolution [Fig. 5.2 (b)], the direction of the induced current in the coil has reversed. But at the same time, the positions of segments R_1 and R_2 are also reversed with the result that brush B_1 comes in contact with the segment that is positive, i.e., segment R_2 in this case, and brush B_2 comes in contact with the segment that is negative, i.e., segment R_1 in this case. Hence, the current in the external load circuit remains unchanged.

The nature of current in the external load circuit with the rotation of the coil, i.e., with time, is shown in Fig. 5.4. This current is unidirectional but not constant like a pure direct current.

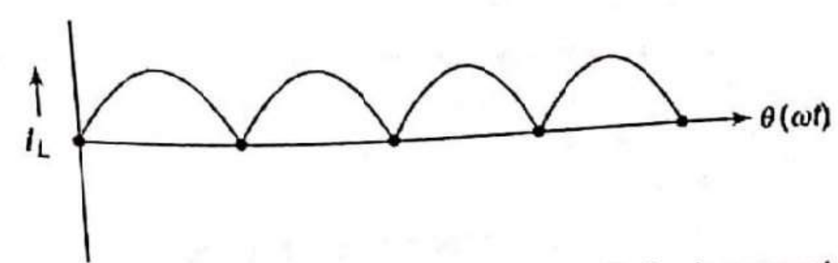

Fig. 5.4 Current in the external load circuit of a dc generator

Thus, the current induced in the coil is alternating but due to the commutator and the brushes, the current flowing through the external circuit is unidirectional. In other words, the commutator acts as a rectifier.

5.2.2 DC Motor

Working principle

The working of a dc motor is based on the principle that when a current-carrying conductor is placed in a magnetic field, the conductor experiences a mechanical force, whose direction is given by Fleming's left hand rule and magnitude is given by

$$F = B\,I\,l\,\sin\theta \text{ newton}$$

where F = mechanical force experience by the conductor in N
B = flux density in Wb/m^2
l = active length of the conductor in m
I = current through the conductor in A
θ = angle between the direction of the current and the magnetic field

Consider a single conductor placed in a magnetic field produced by permanent magnets as shown in Fig. 5.5(a). If current is passed through the conductor in the direction shown in Fig. 5.5(b), i.e., into the plane, then according to the basic principle, the conductor will experience a mechanical force. If the force is sufficient, then the conductor will move in the direction of the force. By Fleming's left hand rule, it is observed that the direction of motion of the conductor or the force is towards the right direction (from left to right).

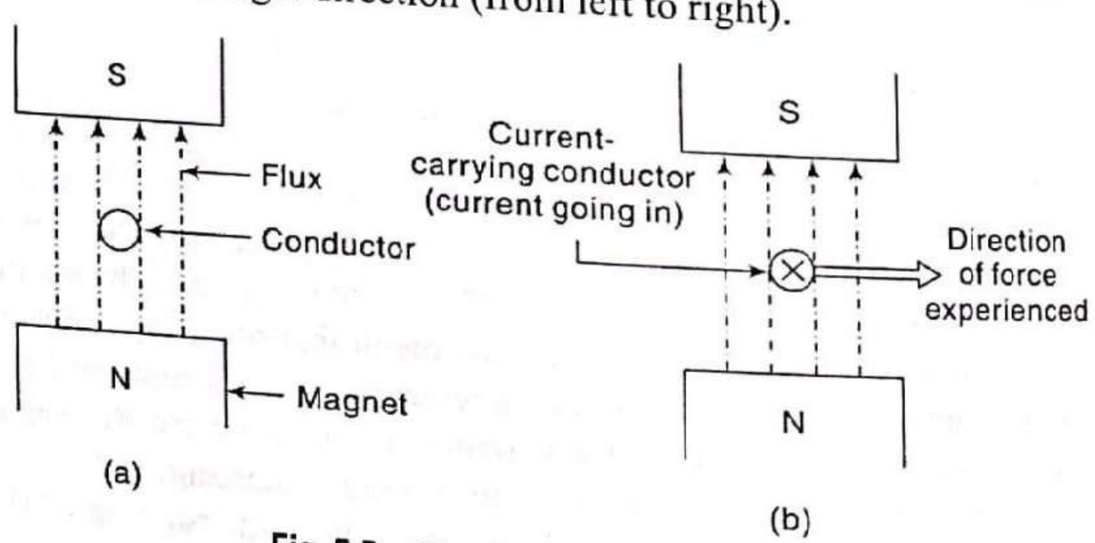

Fig. 5.5 Working principle of a dc motor

Fleming's left hand rule is as follows:

Outstretch the three fingers of left hand, namely thumb, index finger and middle finger, such that they are mutually perpendicular to each other. If the index finger is made to point in the direction of magnetic field, middle finger in the direction of the current, then the thumb gives the direction of the force experienced by the conductor.

Apply the above rule to verify the direction of force experienced by a single conductor placed in a magnetic field as shown in Figs 5.6 (a), (b), (c), and (d).

It can be seen that if the direction of magnetic field is reversed without changing the direction of current through the conductor, then the direction of force experienced also gets reversed [see Figs 5.6(a) and (c)]. Similarly, keeping the direction of magnetic field same, if the direction of current through the conductor is reversed, then also the direction of force experienced by the conductor gets

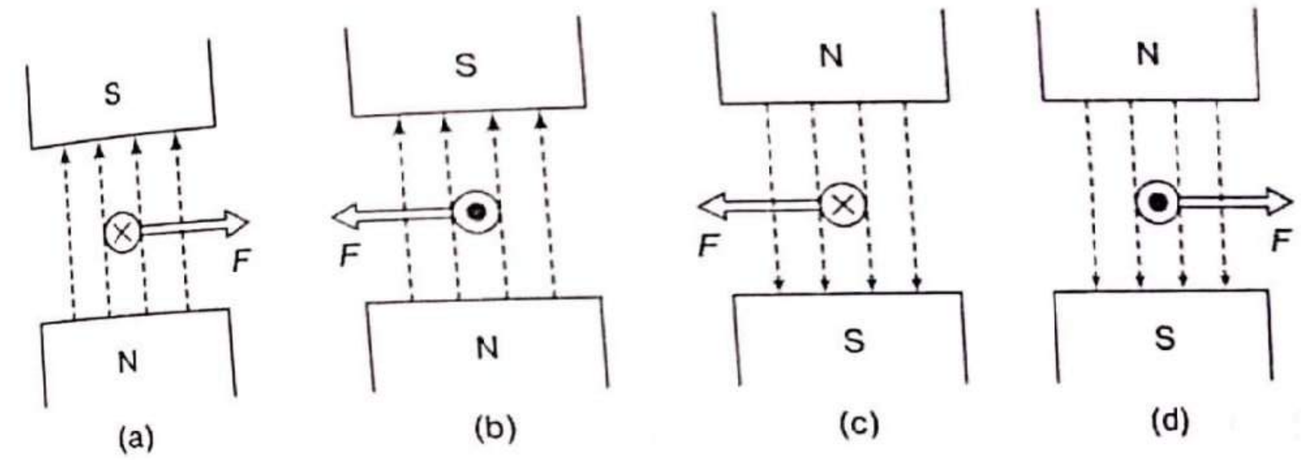

Fig. 5.6 A conductor placed in a magnetic field under different situations

reversed [see Figs 5.6(a) and (b)]. But if directions of both magnetic field and current through the conductor are reversed, then the direction of force experienced by the conductor remains unchanged [see Figs 5.6(a) and (d)].

Working

Figure 5.7 shows the schematic diagram of a simple dc motor consisting of a rectangular copper coil $ABCD$ mounted on a shaft and placed in a magnetic field produced by permanent magnets. The coil has two identical conductors AB and CD. Two ends of the coil are connected permanently to two commutator segments R_1 and R_2 respectively. The commutator segments are well insulated from each other. The commutator is placed on the same shaft along with the coil. Two stationary carbon brushes B_1 and B_2 are pressed against the commutator.

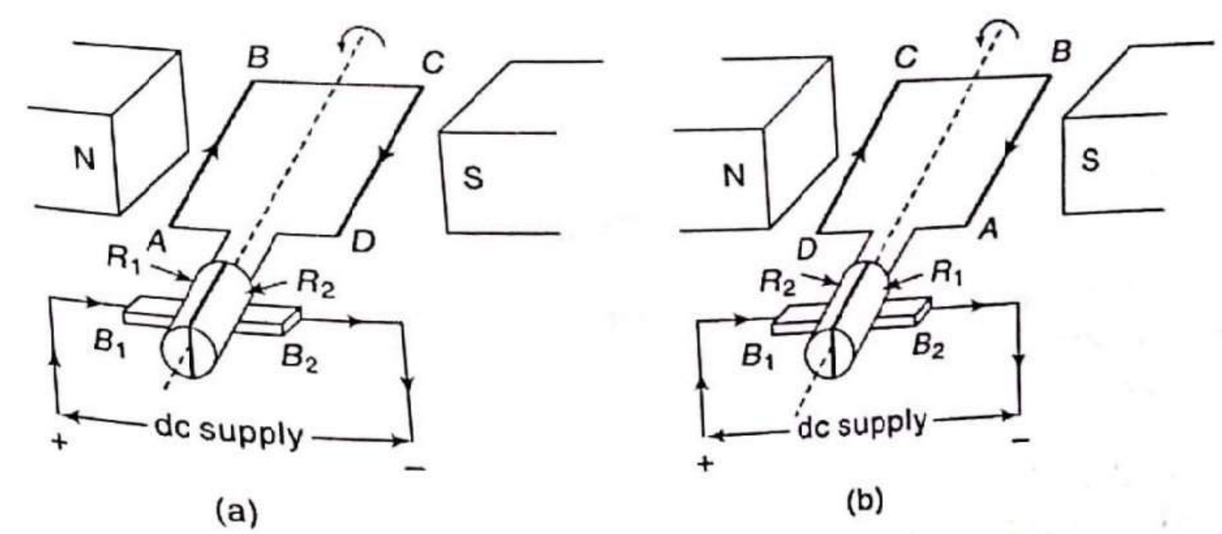

Fig. 5.7 Schematic diagram of a dc motor

When the dc supply connected across the brushes B_1 and B_2 is switched on, current flows through the coil $ABCD$ as shown in Fig. 5.7(a). As a result, each conductor of the coil experiences a mechanical force. By Fleming's left hand rule, the conductor AB experiences a force in downward direction, while the conductor CD experiences a force in upward direction. These forces collectively produce a torque, and the coil rotates about its own axis (shaft) in anticlockwise direction.

As soon as half a rotation of the coil is completed, segment R_1 of the commutator comes in contact with brush B_2 and segment R_2 with brush B_1, thereby

reversing the direction of current in the coil as shown in Fig. 5.7(b). Since the position of the conductors *AB* and *CD* of the coil are also interchanged, the direction of rotation of the coil remains unchanged and the coil keeps on rotating in the same direction.

Thus, function of the commutator is to reverse the direction of the current in each conductor as it passes from one pole to another. It helps to develop a continuous and unidirectional torque.

5.3 Construction of DC Machine

Whether the dc machine is a generator or a motor, the basic construction remains the same. Figure 5.8(a) shows the cross-sectional view showing various parts of a two-pole dc machine. Figure 5.8(b) shows the equivalent circuit of the dc machine.

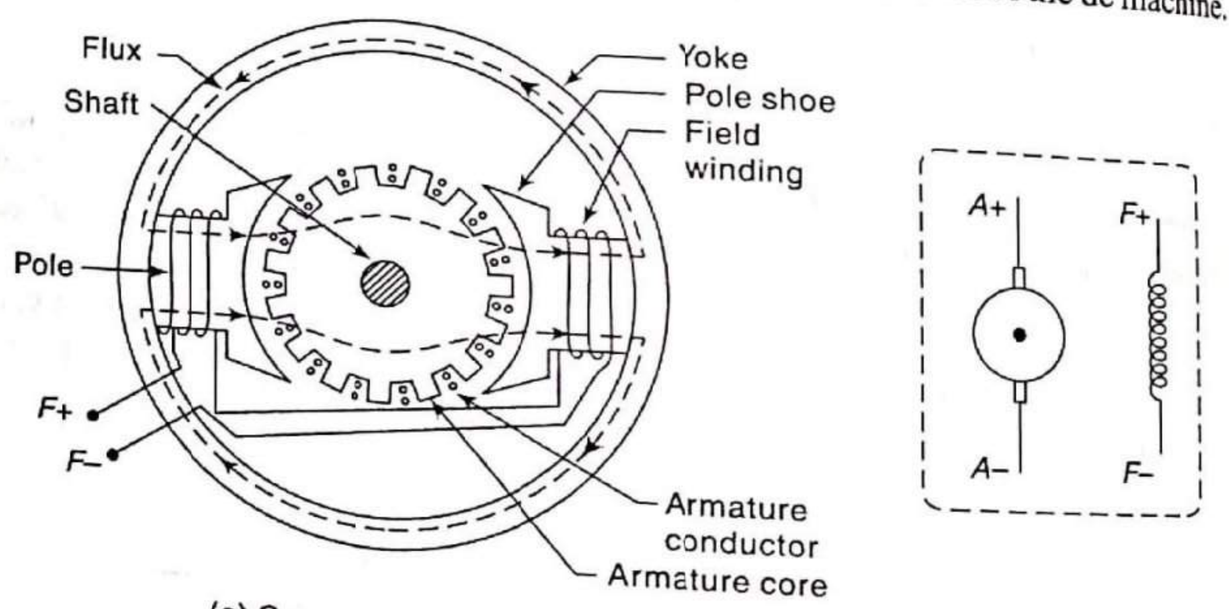

(a) Cross-sectional view

(b) Equivalent circuit

Fig. 5.8 DC machine

A dc machine consists of the following parts:

Stationary parts:
- (i) Yoke
- (ii) Pole
  - (a) Pole shoes
  - (b) Pole core
  - (c) Field winding
- (iii) Brushes

Rotating parts:
- (i) Armature
  - (a) Armature core
  - (b) Armature winding
- (ii) Commutator
- (iii) Bearings

Yoke

It is the outer frame of the dc machine. It is normally made of a magnetic material such as cast iron. For large machines, rolled steel, cast steel, or silicon steel is used, which provides high permeability, i.e., low reluctance for the flux and gives good mechanical strength. Yoke generally serves two purposes:

(i) It provides mechanical support to the poles and acts as a protecting cover for the whole machine, so that the inner parts of the machine get protected from harmful atmospheric elements such as moisture, dust, and acidic fumes.

(ii) It forms a part of magnetic circuit and carries the magnetic flux produced by the poles. It provides the path of low reluctance for magnetic flux.

Poles

An even number of poles are bolted to the yoke. Each pole is divided into three parts, namely pole core, pole shoe, and field winding. This is shown in Fig. 5.9.

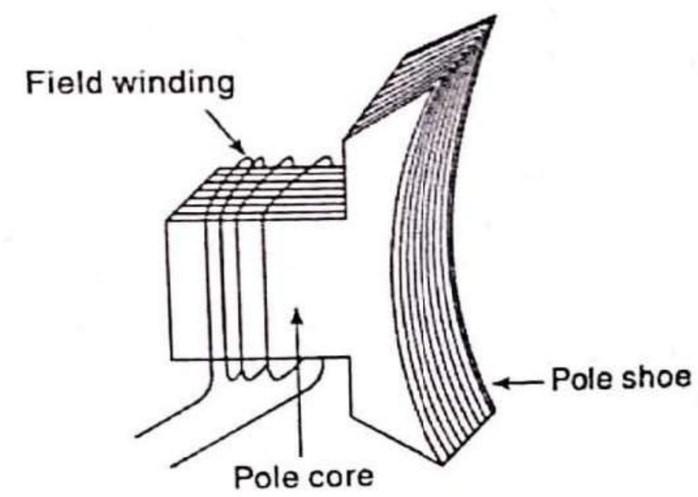

Fig. 5.9 Pole

The poles of the machine are electromagnets. A winding is placed over the poles to excite them. This winding is called exciting winding or field winding or magnetizing winding. However, more commonly used name is **field winding**. As the poles are excited by the winding, they produce a magnetic field in the machine.

The pole cores, which support the field windings, are mounted on the inside circumference of the yoke. The core is made of cast steel or sheet steel laminations of high permeability, so that it provides the low reluctance for the flux.

The pole faces are shaped to fit the curvature of the armature as shown in Fig. 5.8(a) and are known as the **shoes of the pole**. The pole shoes serve two purposes: (i) they spread out the flux in the air gap also, being of larger cross section, reduce the reluctance of the magnetic path and (ii) they support the exciting coils (or field coils).

The field coils, which consist of copper wire or strip, are former-wound for the correct dimension. Then the former is removed and the wound coil is put into the place over the core. These field coils are connected in series, so that finally we get the field winding having two terminals called **F+ and F–**.The field winding receives the current either from an external dc source or may be connected directly across the armature. When current flows through the field winding, magnetic flux lines are established in the yoke, pole pieces, air-gap and armature core as shown in Fig. 5.8(a).

Armature

It is further divided into two parts, namely armature core and armature winding.

The armature core is cylindrical in shape, mounted on the shaft as shown in Fig. 5.10(a) and rotates in the magnetic field. The outer surface is slotted to receive the armature conductors (winding).The armature core is made of laminations of sheet steel as shown in Fig. 5.10(b).The thickness of the laminations varies from 0.4 to 0.6 mm. The insulation between the core and the conductors is provided by placing thin sheets of solid insulation in the slots. The armature conductors connected in specific manner form the armature coils, which are called **armature winding**. The ends of the armature coils are brought to the commutator segments. The armature windings are made up copper and they form a closed circuit.

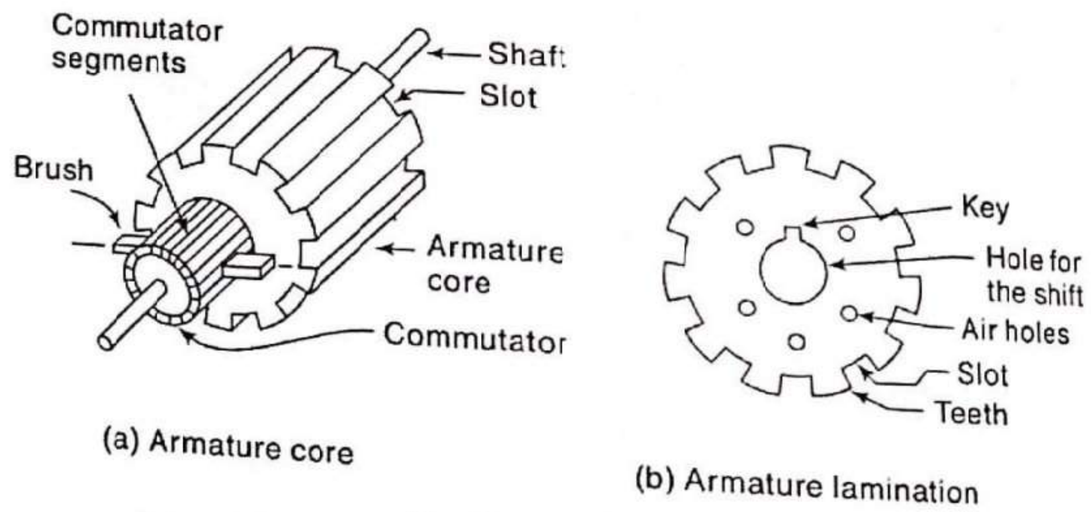

(a) Armature core

(b) Armature lamination

Fig. 5.10 Armature

Commutator and brushes

As shown in Fig. 5.10(a), the commutator is a cylindrical drum mounted on the shaft, along with the armature drum. The surface of the drum is made of a large number of wedge-shaped segments of hard-drawn copper. The segments are insulated from one another by thin layer of mica. The armature winding is tapped at various points and these tapings are successively connected to various commutator segments.

The brushes generally are made to rest on the commutator by placing them in the brush holder against the action of spring whose tension can be adjusted as shown in Fig. 5.11.

The brushes are usually made of carbon and can slide on the commutator with the rotation of the brush gears, so that they can be fixed at any desired position

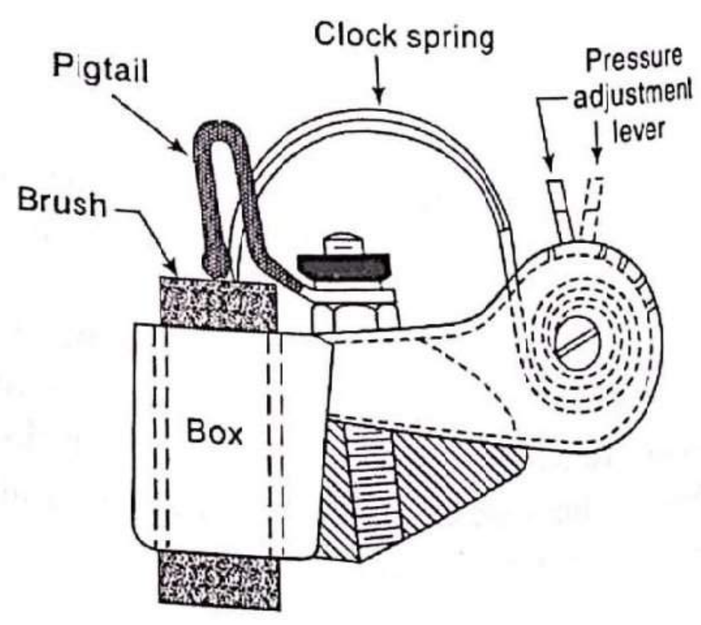

Fig. 5.11 Brush

on the surface of the commutator. A flexible copper pigtail mounted at the top of a brush carries the current. The brush holders, which are attached to the brush pieces together with the spring, hold the brushes in their position on the commutator. When a dc machine acts as a generator, the brushes are used to collect current from the commutator and supply it to the external circuit. When it acts as a motor, the brushes are used to send the current to the armature winding through commutator.

Bearings

The bearings form an important part of all types of rotating machines. Their main function is to support the rotating part and allow its smooth motion with minimum friction. Ball and roller bearings are used for small- and medium-size dc machines. These bearings reduce the bearing losses to the great extent. For medium-size machines, roller bearings may be used at the driving end and ball bearings at the non-driving end (commutator end). Pedestal bearings are normally used for large dc machines.

5.3.1 Types of Armature Winding

In a dc machine, there are a large number of armature conductors, which are connected in specific manner as per the requirement. These are called **armature windings**. According to the way of connecting the conductors, armature winding are basically of two types, namely lap winding and wave winding.

Lap winding

In this type of winding, the armature conductors are divided into parallel paths, whose number equals the number of poles. In a simple lap winding, the connection is made from one commutator segment through the sides of the coil to the next commutator segment [see Fig. 5.12 (a)]. If an armature with lap winding has P poles and Z conductors, then the number of parallel paths will also be P, each consisting of Z/P conductors, connected in series between the positive and negative brushes. The current carried by each path is I_a/P, where I_a is the total armature

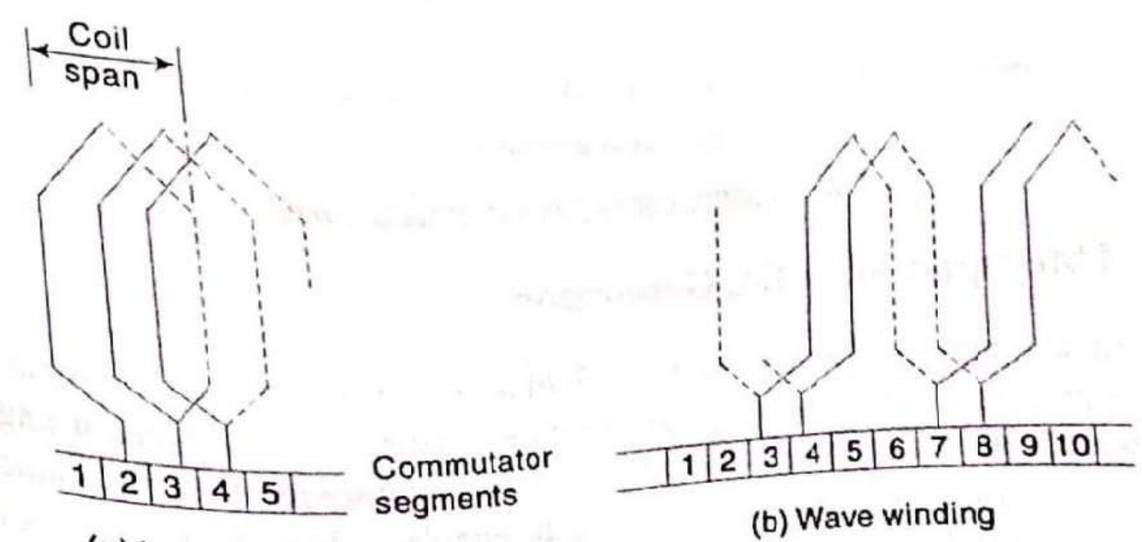

(a) Lap winding

(b) Wave winding

Fig. 5.12 Types of armature winding

current. Due to the presence of a large number of parallel paths, lap winding is more suitable for generating large currents. Figure 5.13(a) shows the internal connections in armature of lap winding.

Wave winding

In this type of winding, the armature conductors are divided into two parallel paths. Thus, the armature current entering the negative brush finds two parallel paths while going to the positive brush. Hence, each parallel path carries a current of $I_a/2$, where I_a is the total armature current. In wave winding, the first conductor (say under N-pole) is connected directly to another conductor, which occupies a similar position, but under the opposite polarity pole (i.e., S-pole in the above example). The winding advances forward to the next N-pole and so on [see Fig. 5.12(b)]. This type of winding is so named because it travels like a progressive wave. As the number of parallel paths is less, it is preferable for low-current, high-voltage capacity generators. Figure 5.13(b) shows the internal connections in armature of wave winding.

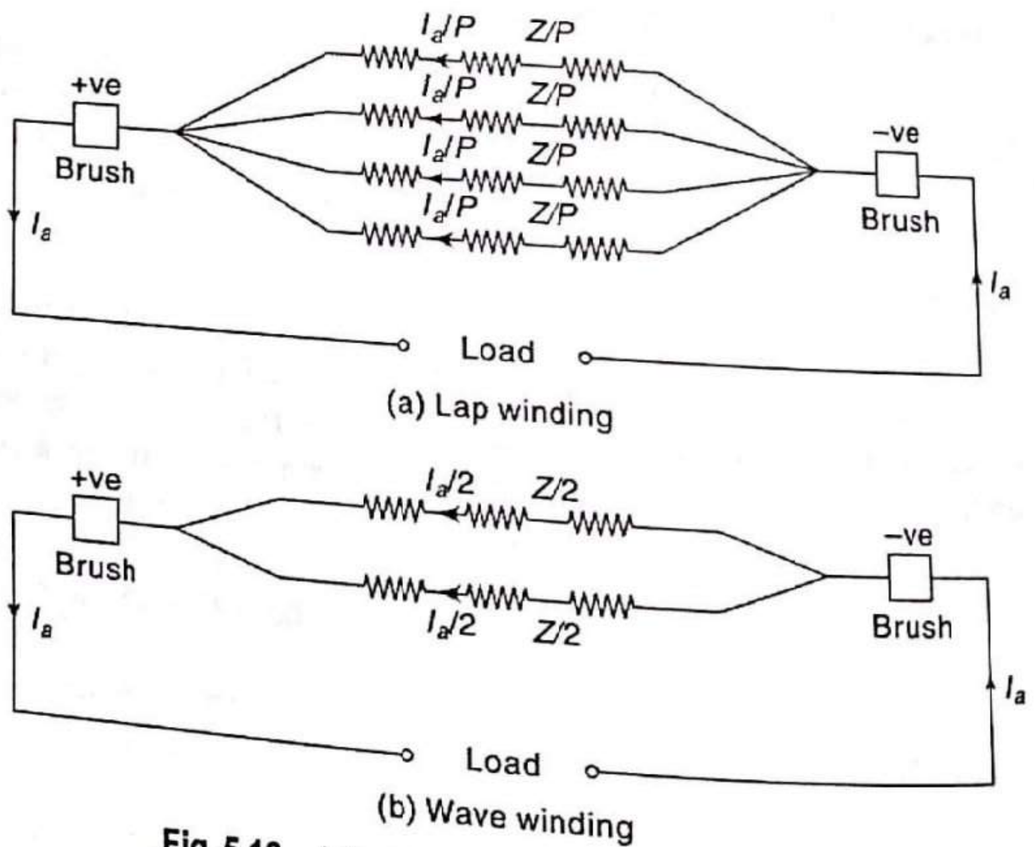

Fig. 5.13 Internal connections in armature winding

5.4 EMF Equation of DC Generator

When field winding is excited, magnetic field is established in the dc machine. To use this machine as a generator, the armature is rotated with constant angular velocity with the help of prime mover. When the armature rotates, its conductors cut the magnetic flux lines and according to Faraday's law of electromagnetic induction, emf induced in the conductors. The equation of total induced emf in a dc generator can be calculated as follows.

Let P = Number of poles of generator
Φ = Flux produced by each pole in weber (Wb)
N = Speed of armature in rpm
Z = Total number of armature conductors
A = Number of parallel paths in which the total number of conductors are divided.

For lap type of winding, $A = P$
For wave type of winding, $A = 2$
According to Faraday's law of electromagnetic induction,

$$\text{Average value of emf induced in single conductor} = \frac{d\Phi}{dt} \quad (\because N = 1)$$

Now, consider one revolution of a conductor. In one revolution, the conductor will cut the total flux produced by all the poles (= $P\Phi$).
Flux cut by the conductor in one revolution, $d\Phi = P\Phi$ weber

$$\text{Time required to complete one revolution, } dt = \frac{60}{N} \text{ sec}$$

$$\text{Hence, average value of emf induced in single conductor} = \frac{d\Phi}{dt} = \frac{P\Phi}{\frac{60}{N}} = \frac{P\Phi N}{60} \text{ volt}$$

This is the emf induced in one conductor. Now, the conductors in one parallel path are always in series. There are Z conductors with A parallel paths. Hence, Z/A number of conductors are always in series and emf remains same across all the parallel paths.
So, total emf can be expressed as

$$E_g = \frac{P\Phi N}{60} \frac{Z}{A} \text{ volt}$$

This equation is called emf equation of the dc generator.

We can also write $E_g = \dfrac{\Phi Z N}{60} \dfrac{P}{A}$ volt

where $A = P$ for lap winding
$A = 2$ for wave winding

5.5 Types of DC Generators

The symbolic representation of a dc generator is shown in Fig. 5.14. The armature is denoted by a circle with two brushes. The armature is driven by prime mover with speed N rpm. The two ends of the armature are denoted as $A+$ and $A-$. The field winding is shown near armature and the two ends are denoted by $F+$ and $F-$.

The poles of the machine are electromagnets. By passing the current through the field winding, the magnetic field is produced in the generator. Hence, this current is called **exciting current**. Depending on the way of deriving the field current or exiting current, dc generator is basically divided into two categories: (i) separately excited generator and (ii) self-excited generator. The self-excited generator is further classified depending upon the way of field winding connection with armature as (i) shunt generator, (ii) series generator, and (ii) compound generator.

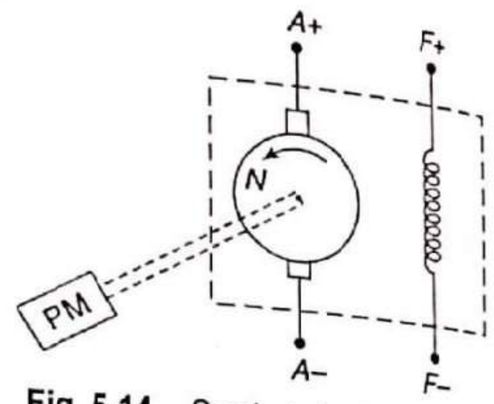

Fig. 5.14 Symbol of a dc generator

5.5.1 Separately Excited DC Generator

When the field winding is supplied from external, separate dc supply, i.e., excitation of the field winding is separate, the generator is called separately excited dc generator. Schematic representation of separately excited dc generator is shown in Fig. 5.15.

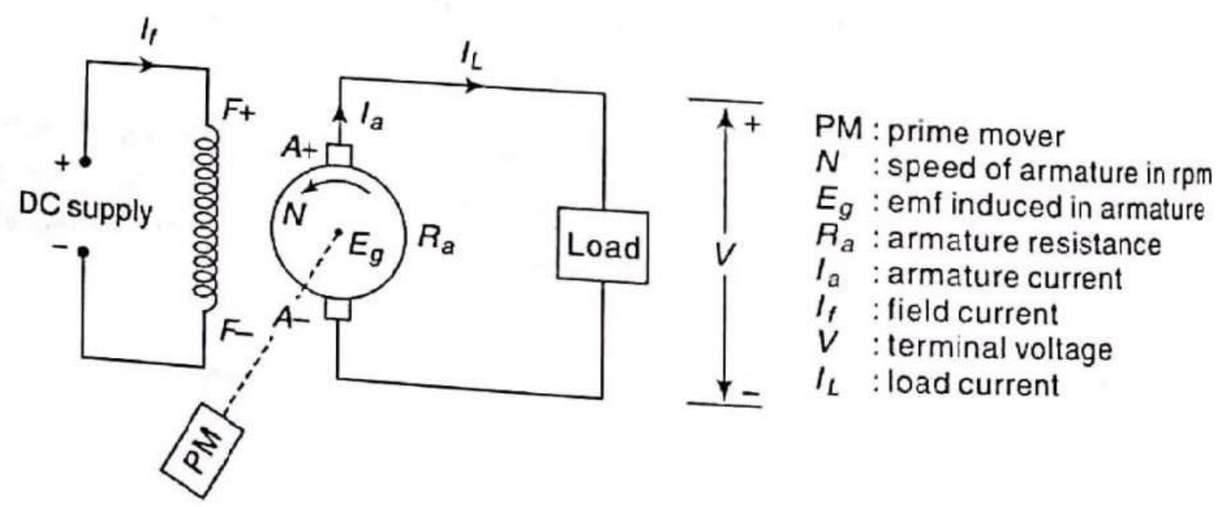

Fig. 5.15 Separately excited dc generator

Voltage and current relations

The prime mover rotates the armature at N rpm. The generator induces the emf E_g. Since the field winding is excited separately, the field current depends on supply voltage and resistance of the field winding. For armature side, we can see that it is supplying a load demanding a load current I_L at a voltage of V, which is called **terminal voltage.**

Now, $I_a = I_L$ (5.3)

Equation (5.3) is called **current equation.**

The internally induced emf E_g supplies the voltage to the load. Hence, terminal voltage V is a part of E_g. But it is not equal to V while supplying a load. This is because when armature current I_a flows through armature winding, due to armature

winding resistance R_a ohm, there is a voltage drop across armature winding equal to I_aR_a volt. The induced emf has to supply this drop, along with the terminal voltage V. To keep I_aR_a drop to minimum, the resistance R_a is designed to be very small. In addition to this drop, there is some voltage drop at the contacts of the brush, called **brush contact drop**. But this drop is negligible and hence, generally neglected. When armature carries current I_a, it produces its own flux called armature flux. This flux has a tendency to disturb the pattern of main useful flux produced by field winding. This distortion produced by armature flux reacting with field flux is called **armature reaction**. Due to this armature reaction, there is a drop in voltage.

Hence, in all the induced emf, E_g has to overcome I_aR_a drop, brush contact drop and armature reaction drop to produce the terminal voltage V at the load. Thus, the voltage equation for the generator is

$$E_g = V + I_aR_a + V_{brush} + \text{Armature reaction drop} \quad (5.4)$$

Equation (5.4) is called **voltage equation.**

By using the voltage equation, induced emf E_g or terminal voltage V can be determined if other drops are known. The brush contact drop is generally specified as per brush drop. As there are two brushes, total brush drop is twice the drop per brush.

5.5.2 Self-excited DC Generator

Self-excited dc generator is one whose field windings are excited by the current produced by the generator itself. Now, without generated emf, field cannot be excited in such a generator and without excitation, there cannot be generated emf. So, one may obviously wonder how this type of generator works. The answer to this is residual magnetism possessed by the field poles under normal condition. This enables armature to develop small emf, which circulates current through field, which further increases the flux produced. Because of this cumulative process, the generator ultimately produces its rated voltage.

There are three types of self-excited generators named according to the manner in which their field windings are connected to the armature as: (i) shunt generator, (ii) series generator, and (iii) compound generator.

Shunt generator

When the field winding is connected across or in parallel with the armature, the generator is called shunt generator. Since the field winding has large number of turns of thin wire, it has high resistance compared to the armature winding. Let R_{sh} be the resistance of the field winding and I_{sh} be the current through the field winding. Schematic representation of shunt generator is shown in Fig. 5.16(a).

Before loading a shunt generator, it is allowed to build up its voltage. Assume that the generator in Fig. 5.16(a) has no load connected to it and the armature is driven at a certain speed by a prime mover. Usually, there is always present some residual magnetism in the poles; hence, a small emf is produced initially. This emf circulates a small current in the field circuit, which increases the pole flux.

When flux is increased, generated emf is increased, which further increases the flux and so on. As shown in Fig. 5.16(b), 'E_1' is the induced emf due to residual magnetism, which appears across the field circuit and causes the field current 'I_{sh1}' to flow. This current aids residual flux and hence produces a larger induced emf 'E_2'. In turn, this increased emf 'E_2' causes an even larger current 'I_{sh2}', which creates more flux for a still larger emf and so on. This process of voltage build-up continues. The effect of magnetic saturation in the pole faces limits the terminal voltage of the generator to a steady state value (E_g).

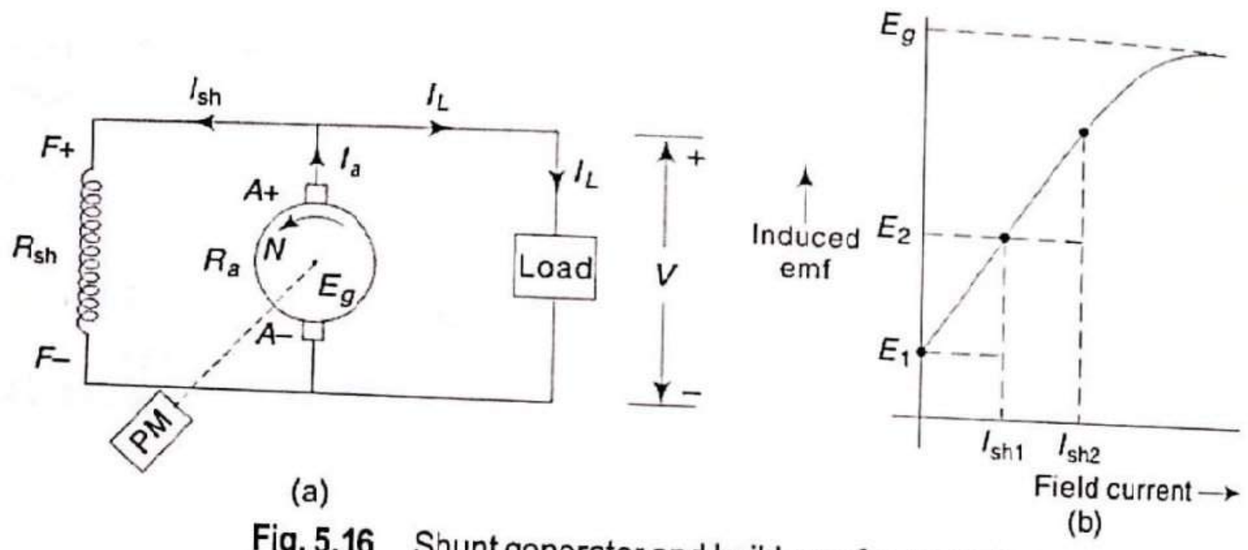

Fig. 5.16 Shunt generator and build-up of a generator

Voltage and current relations From the circuit shown in Fig. 5.16(a), we can write the current equation as

$$I_a = I_L + I_{sh} \tag{5.5}$$

Now, voltage across load is V, which is same across field winding as both are in parallel with each other.

So, $$I_{sh} = \frac{V}{R_{sh}}$$

While induced emf E_g still requires to supply voltage drop I_aR_a, brush contact drop and armature reaction drop. Thus, we get the voltage equation as

$$E_g = V + I_aR_a + V_{brush} + \text{Armature reaction drop} \tag{5.6}$$

Since the shunt field winding has large number of turns of thin copper, its cross-sectional area is small. Its resistance R_{sh} is high. This is because the load current should not disturb the field current I_{sh} and remains constant for the operation range of generator.

Load characteristics of shunt generator The relation between the terminal voltage V and the load current I_L is called load characteristics or performance characteristics of the generator.

From the voltage equation, we can see that as load current I_L increases, the armature current I_a increases to satisfy the load demand. Thus, the armature voltage drop I_aR_a also increases. Hence, the terminal voltage $V = E_g - I_aR_a$ decreases, neglecting other drops. But as R_a is very small, though I_L changes from no load to

full load, the drop in the terminal voltage is very small. This is shown in Fig. 5.17. Hence, dc shunt generator is also called constant voltage generator.

Application of shunt generator Due to constant voltage characteristics, shunt generators are commonly used for battery charging, ordinary lighting and power supply purposes.

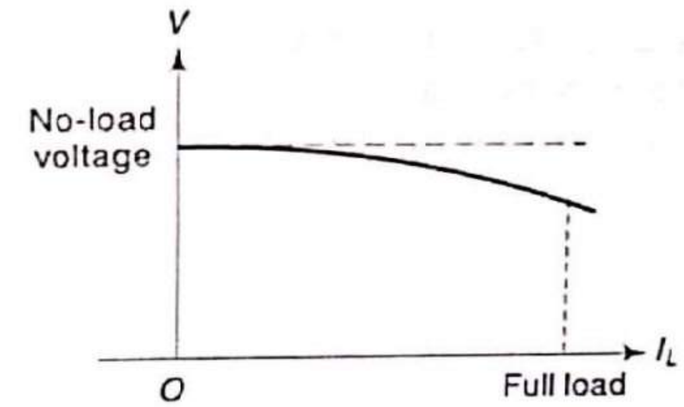

Fig. 5.17 Load current vs terminal voltage

Series generator

When the field winding is connected in series with the armature winding while supplying the load, the generator is called series generator. It is shown in Fig. 5.18. The field winding resistance is denoted by R_{se}. The resistance R_{se} is very small and hence, naturally it has less number of turns of a wire of thick cross section.

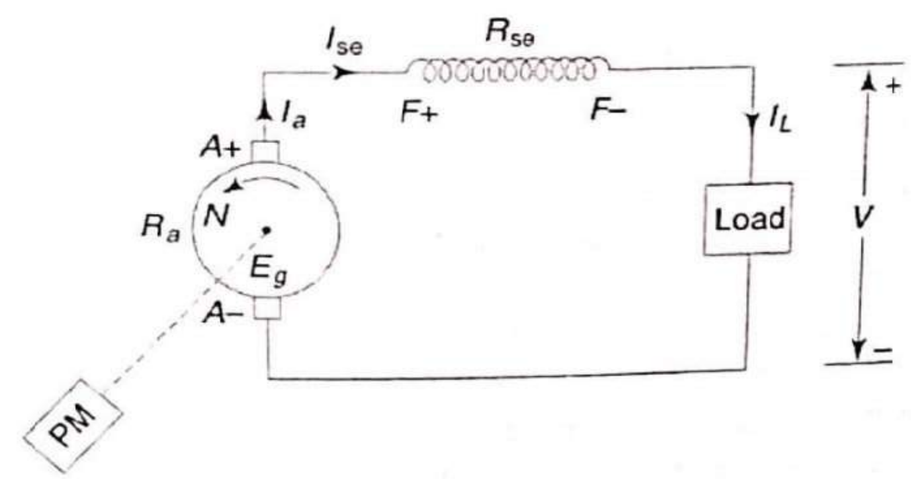

Fig. 5.18 Series generator

Voltage and current relations As armature, field winding and load, all are in series, they carry the same current. So, the current equation can be written as

$$I_a = I_{se} = I_L \tag{5.7}$$

where I_{se} = current through series field winding

Now, in addition to drop I_aR_a, induced emf has to supply voltage drop across series field winding too.

The voltage drop across series field winding $= I_{se}R_{se} = I_aR_{se}$ $\quad (\because I_a = I_{se})$

Thus, voltage equation can be written as

$$E_g = V + I_aR_a + I_aR_{se} + V_{brush} + \text{Armature reaction drop} \tag{5.8}$$

or $$E_g = V + I_a(R_a + R_{se}) + V_{brush} + \text{Armature reaction drop}$$

Load characteristics of series generator In series generator, as $I_a = I_{se} = I_L$, when I_L increases, I_{se} also increases. The flux Φ is directly proportional to I_{se}. So, the flux increases. As induced emf E_g is directly proportional to the flux, E_g also increases. For load characteristics, the drop $I_a(R_a + R_{se})$ increases as I_a increases. But this drop is small compared to increase in V due to increase in E_g,

and so, graph of V versus I_L is rising in nature as shown in Fig. 5.19. On no load, there exists some voltage due to residual flux retained by the field winding, and the characteristics do not pass through origin.

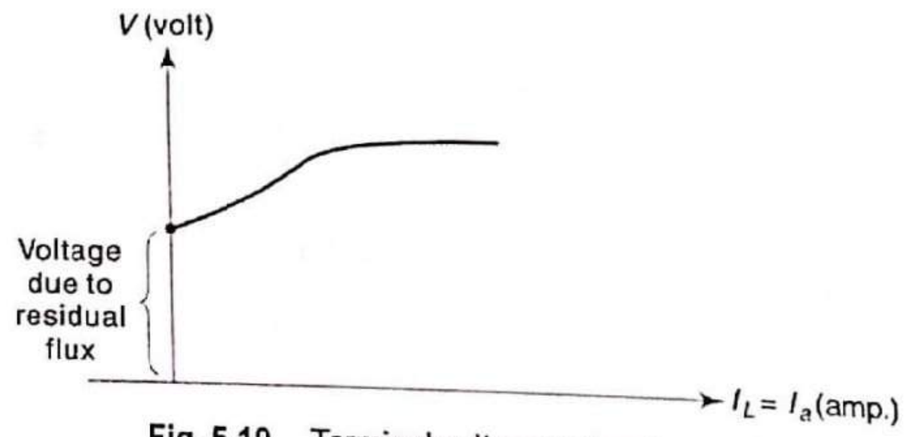

Fig. 5.19 Terminal voltage vs load current

Application of series generator Due to the rising characteristics, series generators are used as boosters on dc feeders and as constant current generators for welding generators and lamps.

Compound generator

In compound generator, the poles of the machine are excited by the two independent field windings, i.e., shunt field winding and series field winding. The shunt field winding is connected in parallel and the series field winding is connected in series, with the armature winding. The shunt field winding is stronger than the series field winding. If series field aids the shunt field, i.e., the magnetizing effect of the two windings is cumulative, the generator is called cumulative compound generator [see Fig. 5.20(a)]. If series field opposes the shunt field, the generator is said to be differential compound generator [see Fig. 5.20(b)].

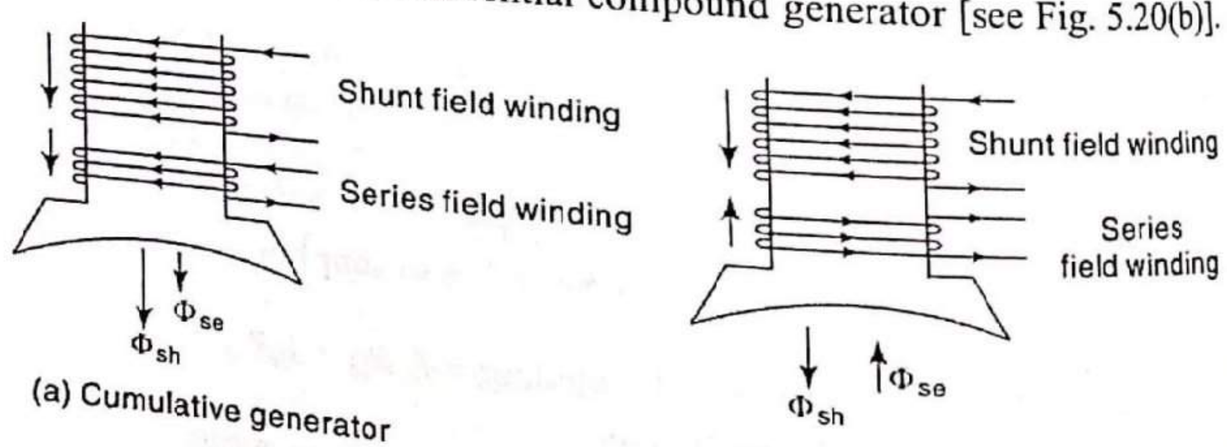

Fig. 5.20 Excitation of pole by shunt and series field windings

The compound generator can be either short shunt or long shunt as shown in Figs 5.21(a) and (b) respectively. So, the cumulative or differential compound generator can be either short shunt or long shunt.

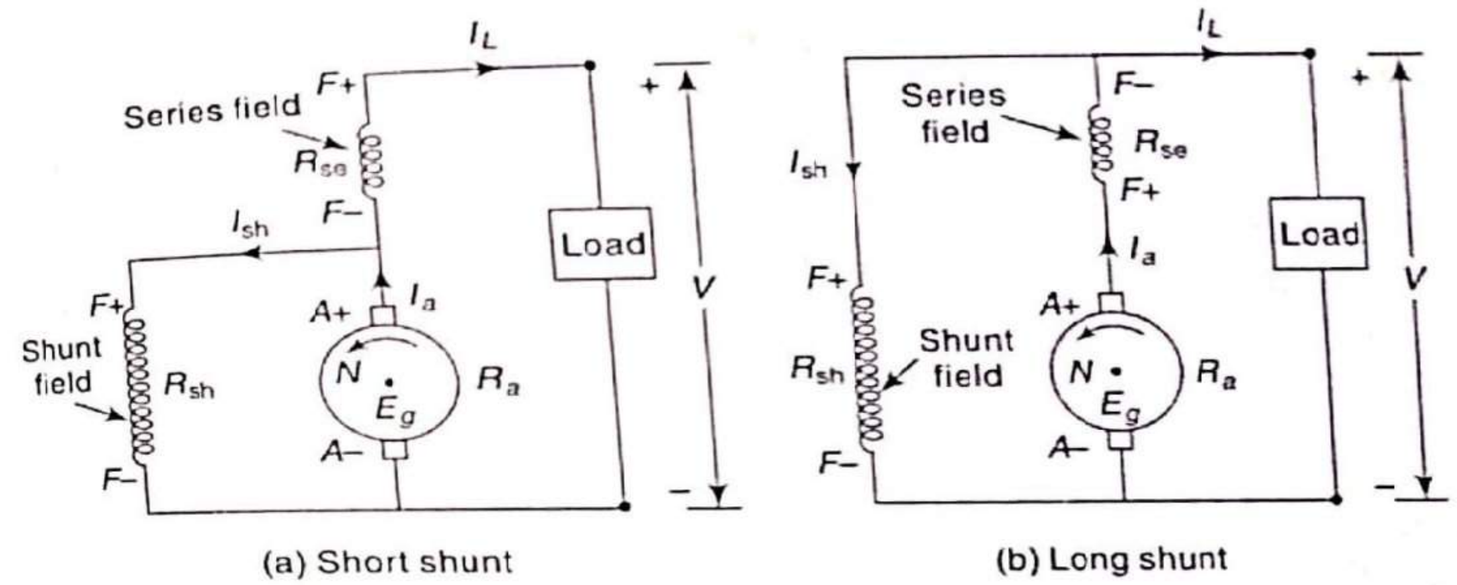

Fig. 5.21 Compound generator

Load characteristics In Fig. 5.21, if it is imagined that the series field winding is absent, it is simple-shunt generator and its load characteristics will be same as those shown in Fig. 5.17. These characteristics are of drooping nature. For the cumulative compound generator, series field aids the shunt field, and so, it gives characteristics of boosting nature. But for differential compound generator, as series field winding opposes the shunt field, it now gives negative boosting characteristics. The load characteristics of compound generator are shown in Fig. 5.22.

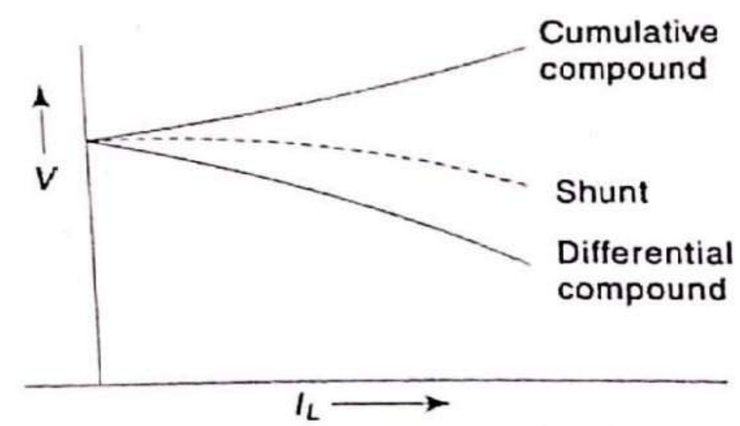

Fig. 5.22 Load characterstics of compound generator

5.6 Operation of DC Motor and Back EMF

We know that constructionally there is no basic difference between a dc generator and a dc motor. In fact, the same machine can be used interchangeably as a generator or as a motor.

Figure 5.23 shows the cross-sectional view of two-pole dc motor. When its field magnets are excited and dc voltage is applied to the motor, current flows through the armature conductors. Armature conductors under the N-pole are assumed to carry the current downwards (shown by crosses) and those under S-pole to carry current upwards (shown by dots).

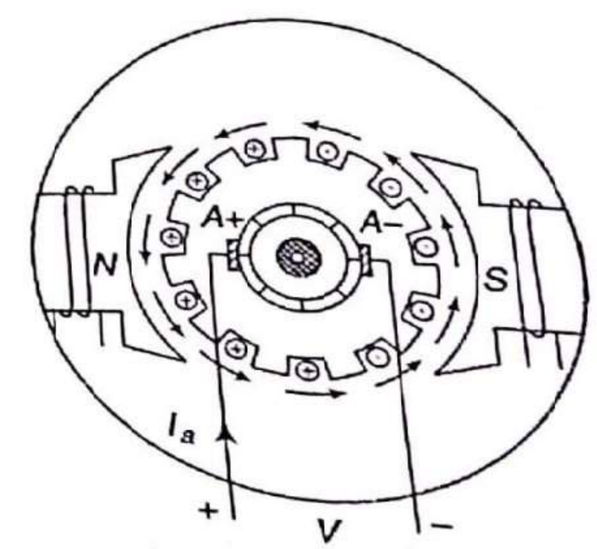

Fig. 5.23 Two-pole dc motor

By basic principle, each conductor will experience a mechanical force. According to Fleming's left hand rule, each conductor will experience a force in anticlockwise direction, which is shown by small arrows placed above each conductor. These forces collectively produce a driving torque, which sets the armature rotating in anticlockwise direction.

It should be noted that the function of commutator is to reverse the direction of current in each conductor as it passes from one pole to another. It helps to develop a continuous and unidirectional torque.

It is seen in the generator action that when an armature conductor cuts the lines of flux, emf gets induced in it. In a dc motor, after a motoring action, there exists a generator action. When the armature rotates, the conductor cuts the magnetic flux lines and according to Faraday's law of electromagnetic induction, emf gets induced in it. This induced emf in the armature always acts in the opposite direction of the supply voltage. This is according to Lenz's law, which states that the direction of induced emf is always so as to oppose the cause producing it. In a dc motor, electrical input, i.e., the supply voltage, is the cause and hence, this induced emf opposes the supply voltage. This emf tries to set up a current through the armature in the opposite direction, which supplies voltage forcing through the conductor.

So, as this emf always opposes the supply voltage, it is called **back emf** and denoted by E_b. Though it is denoted as E_b, basically it gets generated by the generating action that we have seen earlier. So, its magnitude can be determined by the emf equation derived earlier. Thus,

$$E_b = \frac{\Phi ZN}{60} \frac{P}{A} \text{ volt}$$

where all symbols carry the same meaning as in case of generators.

The back emf is shown schematically in Fig. 5.24(a). If V is the supply voltage and R_a is the value of the armature resistance, the equivalent circuit will be as shown in Fig. 5.24(b). In equivalent circuit, back emf is represented by a battery of emf E_b with polarity such that it opposes the supply voltage.

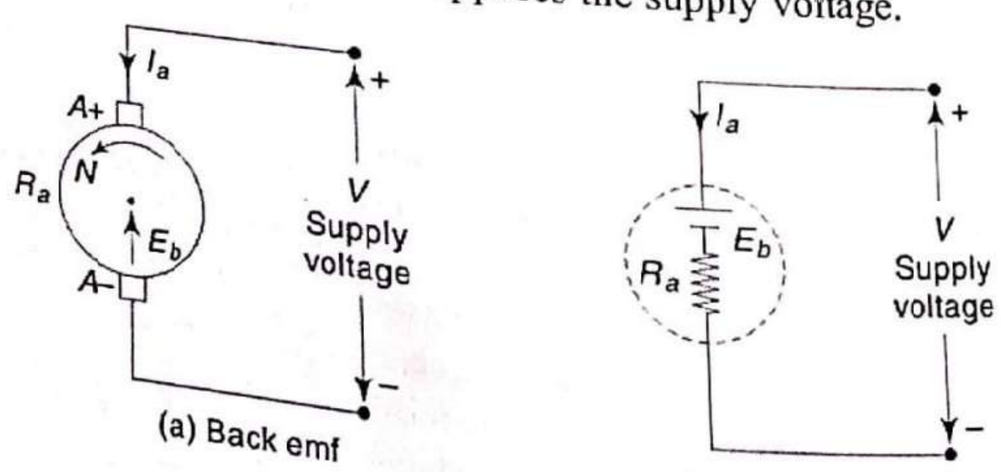

Fig. 5.24 Armature circuit

Applying KVL to the equivalent circuit shown in Fig. 5.24(b), we get the voltage equation of the dc motor as

$$V = E_b + I_a R_a \tag{5.9}$$

Thus, in case of dc motor, supply voltage V has to overcome back emf E_b (which opposes V) and also armature resistance drop $I_a R_a$. In fact, the electrical work done in overcoming the back emf gets converted into the mechanical energy, developed in the armature.

The back emf is always less than the supply voltage. The net voltage across the armature is the difference between the supply voltage and the back emf, which decides the armature current. Hence, from the voltage equation, we can write

$$\text{Armature current, } I_a = \frac{V - E_b}{R_a}$$

Multiplying both sides of the voltage equation, Eq. (5.9), by I_a, we get

$$VI_a = E_b I_a + I_a^2 R_a \tag{5.10}$$

where VI_a = Electrical power input to the armature

$I_a^2 R_a$ = Power loss due to the armature resistance called armature copper loss

$E_b I_a$ = Electrical equivalent of gross mechanical power developed in the armature

Equation (5.10) is called **power equation** of the dc motor.

Hence, some of the armature input is wasted in I^2R loss and rest is converted into mechanical power within the armature.

5.7 Torque Equation of a DC Motor

In general, torque is the turning or twisting movement of a force about an axis. The torque, angular speed and power are related as

Mechanical power developed, $P = T \times \omega$

where T = Torque in Nm

ω = Angular speed in rad/sec

In case of motor, each armature conductor experiences a force, and these forces collectively produce a torque (T_a).

Let T_a be the torque developed by the armature of the motor running at N rpm.

So, the mechanical power developed, $P = T_a \times \omega$ (5.11)

From Eq. (5.10) above (i.e., power equation of a motor), we know that

Mechanical power developed = $E_b I_a$ (5.12)

Equating Eqs (5.11) and (5.12),

$$T_a \times \omega = E_b I_a$$

or $$T_a \times \frac{2\pi N}{60} = E_b I_a \qquad \because \omega = \frac{2\pi N}{60}$$

or $$T_a \times \frac{2\pi N}{60} = \frac{\Phi ZN}{60} \frac{P}{A} I_a \qquad \because E_b = \frac{\Phi ZN}{60} \frac{P}{A}$$

or $$T_a = \frac{1}{2\pi} \Phi Z I_a \left(\frac{P}{A}\right) \text{ Nm}$$

This is the **torque equation** of the dc motor. So, for a dc motor,

$$T_a \propto \Phi I_a$$

5.8 Types of DC Motor

Similar to the dc generators, the dc motors are classified depending upon the way of connecting the field winding with the armature winding as shunt motor and series motor.

5.8.1 Shunt Motor

In this type of dc motor, the field winding is connected across the armature winding and the combination is connected across the supply as shown in Fig. 5.25.

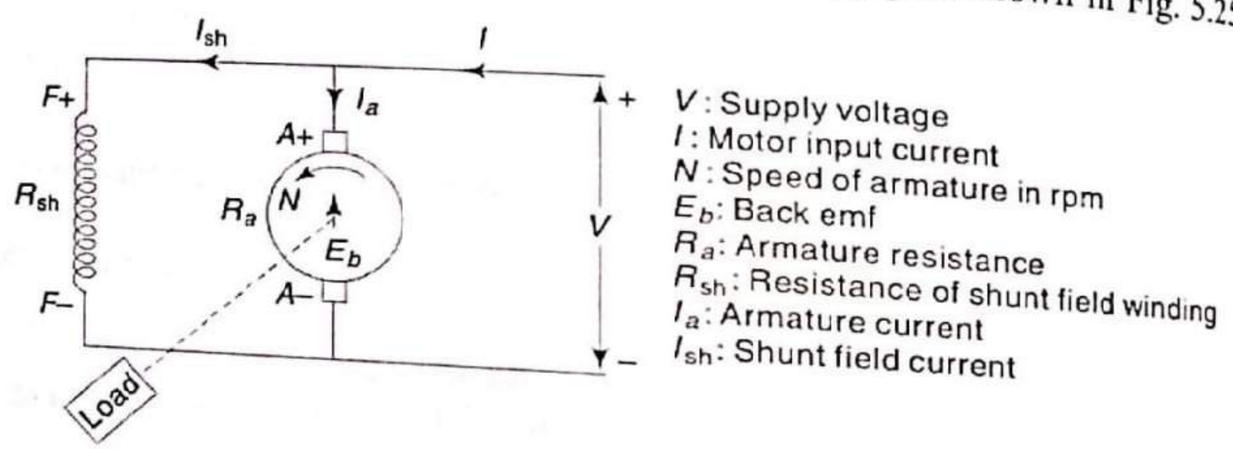

Fig. 5.25 Shunt motor

The value of R_a is very small while R_{sh} is quite large. Hence, shunt field winding has more number of turns with less cross-sectional area.

The voltage across the armature and the field winding is same—equal to the supply voltage V.

From circuit diagram, the total current drawn from the supply can be written as

$$I = I_a + I_{sh} \tag{5.13}$$

Equation (5.13) is called **current equation** of the shunt motor.

where shunt current, $I_{sh} = \dfrac{V}{R_{sh}}$

The supply voltage V has to overcome back emf E_b (which is opposing V) and also armature resistance drop I_aR_a. So, we get the voltage equation of shunt motor as

$$V = E_b + I_aR_a \tag{5.14}$$

Now, the flux produced by the field winding is proportional to the current passing through it, i.e.,

$$\Phi \propto I_{sh}$$

As long as the supply voltage is constant, which is generally so in practice, the flux produced is constant. Hence, dc shunt motor is also called **constant flux motor.**

Applications of shunt motor

Shunt motor is a constant speed motor having medium starting torque. The speed of a shunt motor can be adjusted over a wide range. Therefore, shunt motor can be used in

(i) various machine tools such as lathe machines, drilling machines, milling machines, etc.,
(ii) centrifugal and reciprocating pumps,
(iii) blowers and fans, and
(iv) printing machinery and paper machines.

5.8.2 Series Motor

In this type of dc motor, the series field winding is connected in series with the armature winding and the supply as shown in Fig. 5.26.

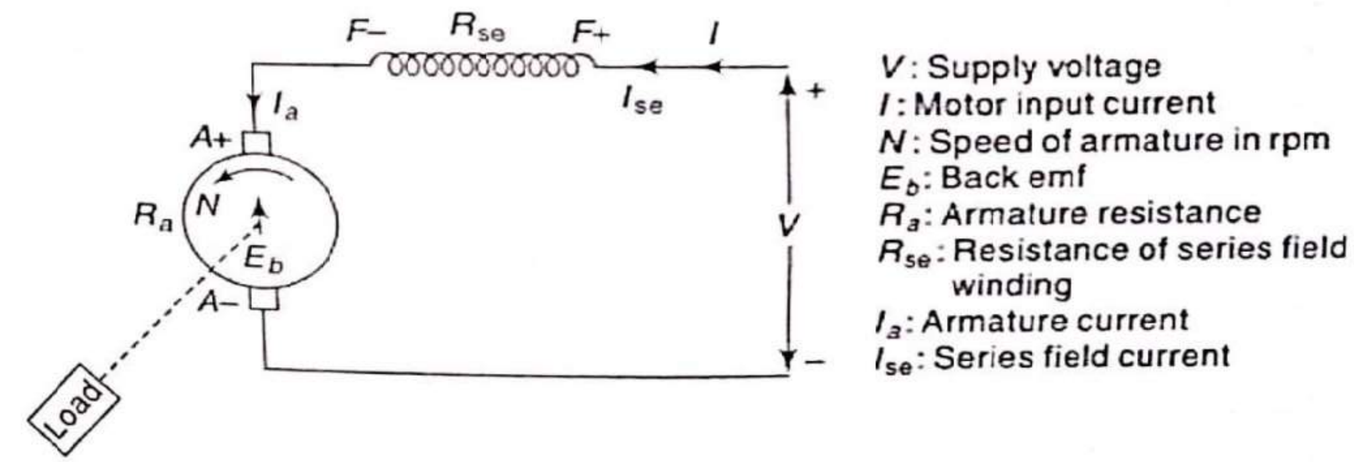

Fig. 5.26 Series motor

The value of R_{se} is very small and it is made of small number of turns having large cross-sectional area.

As all armature, field winding and supply are in series, they carry the same current. So, the current equation can be written as

$$I = I_{se} = I_a \tag{5.15}$$

where I_{se} = current through the series field winding

The supply voltage V has to overcome the drop across series field winding, in addition to the back emf E_b (which is opposing V) and the armature resistance drop I_aR_a. So, we get the voltage equation of series motor as

$$V = E_b + I_aR_a + I_aR_{se}$$

$$V = E_b + I_a(R_a + R_{se}) \tag{5.16}$$

In this motor, entire armature current is passing through the series field winding. So, flux produced is proportional to the armature current, i.e.,

$$\Phi \propto I_{se} \propto I_a$$

Applications of series motor

Series motor has very high starting torque and good accelerating torque. The speed is adjustable and varying. The motor has very low speed at high loads and dangerously high speed at low loads. Therefore, series motor can be used in

(i) electric trains,

(ii) trolley cars and trolley buses,
(iii) cranes and hoists,
(iv) conveyers, and
(v) rapid transit system.

EXERCISES

1. What is the basic nature of induced emf in a dc generator? What is the function of commutator in a dc generator?
2. What is the difference between a generator and a motor?
3. Explain with a neat sketch the construction of a dc machine.
4. Which parts of a dc machine are laminated and why?
5. What is the difference between lap-type and wave-type armature windings?
6. What is the basic principle of a dc generator?
7. Derive from first principles, an expression for induced emf in a dc generator.
8. State different types of dc generator and state applications of each type.
9. Sketch and explain the load characteristics of the following types of generator:
   (i) DC shunt generator
   (ii) DC series generator
   (iii) DC compound generator
10. State various applications of dc generators.
11. Explain the principle of working of a dc motor. What is the function of commutator in a dc motor?
12. State voltage and power equations of a dc motor explaining the importance of each term.
13. What is back emf? Explain the significance of back emf.
14. Derive the expression for the electromagnetic torque developed in a dc motor.
15. Explain why a dc series motor should not be started on no load.
16. What are applications of dc shunt motor?
17. What are applications of dc series motor?

Appendix A

Fundamentals of Electricity

Topics discussed:
Structure of matter; charge; electromotive force and current; relation between charge and current; electric potential; potential difference; electromotive force and potential difference; resistance; factors influencing resistance

Electrical engineering is concerned with the study of all aspects of electric power, i.e., its generation, transmission, and utilization. So, before beginning actual study of electrical engineering, it is necessary to discuss the fundamental ideas about the elements such as electromotive force, current, and potential difference.

A.1 Structure of Matter

For understanding fundamentals of electricity, it is necessary to discuss the structure of matter. All types of matter, whether solid, liquid, or gas, are composed of minute particles called molecules. A molecule is in turn made up of atoms. Those substances whose molecules consist of the same kind of atoms are called **elements**, while those whose molecules consist of atoms of different kinds are called **compounds**. The atoms are the building blocks of the matter. According to the modern electron theory, an atom is composed of three fundamental particles, which are invisible to bare eyes. These are neutron, proton, and electron. Proton is a positively charged particle, while electron is a negatively charged particle. Neutron is uncharged, i.e., neutral in nature. The mass of neutron and proton is same, while electron is lighter, almost 1/1840th the mass of neutron (or proton). The following table gives information about these three particles.

Table A.1 Fundamental particles of matter

Fundamental particle of matter	Symbol	Nature of charge possessed	Mass (kg)
Neutron	n	Neutral	1.675×10^{-27}
Proton	p^+	Positive	1.675×10^{-27}
Electron	e^-	Negative	9.107×10^{-31}

An atom consists of a central part called **nucleus** and in the part around the nucleus (called extra nucleus), there are number of electrons revolving in different paths or orbits. Size of the nucleus is very small as compared to size of the atom. All the protons and neutrons are bound together into the compact nucleus. Therefore, the nucleus of an atom bears a positive charge.

In a normal atom, the number of protons is equal to the number of electrons. An atom as a whole is electrically neutral. The electrons are arranged in different orbits. The nucleus exerts a force of attraction on the revolving electrons and holds them together. The orbit closest to the nucleus is always under the tremendous force of attraction, while the last orbit is under very weak force of attraction. Hence, electrons in the last orbit are loosely held to the nucleus. The last orbit is called **valence shell** and electrons in this orbit are called **valence electrons**.

In some atoms, the valence electrons are so loosely bound to the nucleus that at room temperature, the additional energy imparted to the valence electrons causes them to escape from the valence cell and exist as free electrons. Such free electrons are basically responsible for the flow of electric current through metals.

A.2 Charge

An atom is neutral under ordinary condition, i.e., it contains the same number of protons and electrons so that the total positive charge of protons is exactly neutralized by the total negative charge of electrons. If somehow, some electrons are removed from such a neutral atom, there occurs a deficit of electrons and the atom is said to possess a positive charge. On the other hand, if the electrons are added to a neutral atom, there occurs an excess of electrons and the atom is said to possess a negative charge. Thus, a charged body has either deficiency or excess of electrons.

The charge of an electron is so small that it is not convenient to select it as the unit of charge. In practice, coulomb is used as the unit of charge. One coulomb of charge is equal to the charge on 6.28×10^{18} electrons, i.e.,

$$1 \text{ coulomb} = \text{charge on } 6.28 \times 10^{18} \text{ electrons}$$

Thus, when we say that a body has a positive charge of 1 coulomb, it means that it has a deficit of 6.28×10^{18} electrons.

A.3 Electromotive Force and Current

It has been mentioned earlier that free electrons are responsible for the flow of electric current. Let us now see how it happens. To understand this, first we will see the enlarged view of inside of a piece of a conductor. A conductor has abundant free electrons. The free electrons in such a conductor are always moving in random directions as shown in Fig. A.1(a).

A small electric effort externally applied to the conductor makes all such free electrons to drift along the conductor in a definite particular direction. This direction depends on how the external electric effort is applied to the conductor.

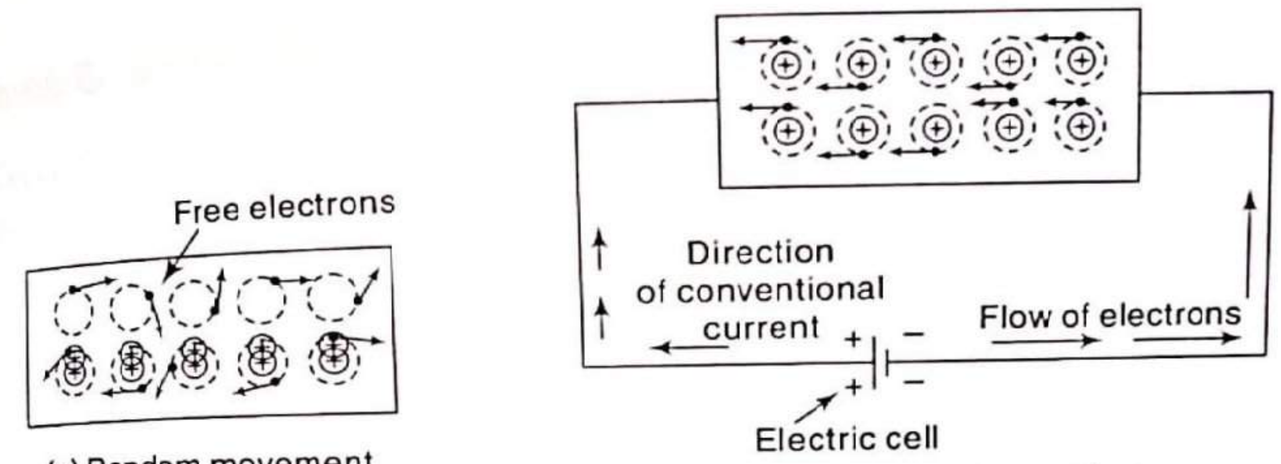

(a) Random movement of free electrons

(b) Directed movement of free electrons

Fig. A.1 Flow of electric current through a conductor

Such an electric effort may be generated by an electrical cell, commonly called battery, connected across the two ends of the conductor. Such physical phenomenon is represented in Fig. A.1(b). The electric effort required to drift the free electrons in one particular direction in a conductor is called **electromotive force** (emf).

A metal consists of charged particles. Like charges repel each other, while unlike charges attract each other. As external electric effort is applied, the free electrons being negatively charged get attracted by positive terminal of the cell connected. And this is the reason why electrons get aligned in one particular direction under the influence of an electromotive force.

The electric effort, i.e., the emf, is maintained across the positive and negative electrodes of the cell, due to the chemical reaction taking place in the solution contained in the cell.

Atoms, on losing or gaining electrons, become charged accordingly and are called ions. Now, when a free electron gets dragged towards the positive terminal from an atom, it becomes a positively charged ion. Such a positive ion drags a free electron from the next atom. This process repeats from atom to atom along the conductor. So, there is flow of electrons from the negative terminal to the positive. This movement of electrons is called **electric current**.

Thus, the directed flow of electrons is called electric current. The actual direction of the current (i.e., flow of electrons) is from the negative terminal to the positive terminal through that part of the circuit external to the cell. However, prior to the electron theory, it was assumed that current flowed from the positive terminal to the negative terminal of the cell via the circuit. This convention is so firmly established that it is still in use. This assumed current is now called **conventional current**.

A.4 Relation between Charge and Current

The current is flow of electrons and thus can be measured by measuring how many electrons are passing through the material per second. This can be expressed in terms of the charge carried by these electrons in the material per second. So, the flow of charge per unit time is used to quantify an electric current.

Thus, current can be defined as the rate of flow of electrons in an electric circuit, i.e., charge flowing per second.

The charge is indicated by Q, while the current is indicated by I. The unit for the current is ampere, which is nothing but coulomb/sec. Hence, mathematically we can write the relation between the charge (Q) and the electric current (I) as

$$I = \frac{Q}{t} \text{ A}$$

where I = average current flowing
Q = total charge transferred
t = time required for transfer of charge

One ampere can be defined as follows:

A current of 1 A is said to be flowing through a conductor when a charge of 1 C is passing any given point in one second.

Now, 1 C is the charge on 6.28×10^{18} electrons. So, 1 A current flow means flow of 6.28×10^{18} electrons per second across a section taken anywhere in the circuit.

A.5 Electric Potential

A body is neutral under ordinary conditions, i.e., it contains the same number of protons and electrons so that the total positive charge of protons is exactly neutralized by the total negative charge of electrons. A body can be charged by removing the electrons from it or by supplying the electrons to it. Work is done in this process because electrons have to be removed or supplied against the opposing forces. This work done is stored in the body in the form of potential energy. When two similarly charged particles are brought near, they try to repel each other, while dissimilar charges attract each other. Thus, a charged body has the capacity to do work by moving other charges either by attraction or repulsion. This ability or capacity of the charged body to do work is called **electric potential.**

The greater the capacity of a charged body to do work, the greater is its electric potential. Obviously, the work done to charge a body to 1 C will be a measure of its electric potential, i.e.,

$$\text{Electric potential, } V = \frac{\text{Work done}}{\text{Charge}} = \frac{W}{Q}$$

The work done is measured in joule (J) and charge in coulomb (C). Therefore, the unit of electric potential will be joule/coulomb or volt (V). If $W = 1$ J, $Q = 1$ C, then $V = 1/1 = 1$ V.

Hence, a body is said to have an electric potential of 1 V if 1 J of work is done to give it a charge of 1 C.

Thus, when we say that a body has an electric potential of 5 V, it means that 5 J of work has been done to charge the body to 1 C. In other words, every coulomb of charge possesses an energy of 5 J. The greater the joule/coulomb on a charged body, the greater is its electric potential.

A.6 Potential Difference

The difference between the potentials of two charged bodies is called **potential difference.**

If two bodies have different electric potentials, a potential difference exists between the bodies. Consider two bodies A and B having potentials of V_1 volt and V_2 volt respectively as shown in Fig. A.2(a). Each coulomb of charge on body A has energy of V_1 joule, while each coulomb of charge on body B has energy of V_2 joule. Suppose V_1 is greater than V_2. Then body A is at higher potential than body B. The potential difference is equal to $(V_1 - V_2)$ volt.

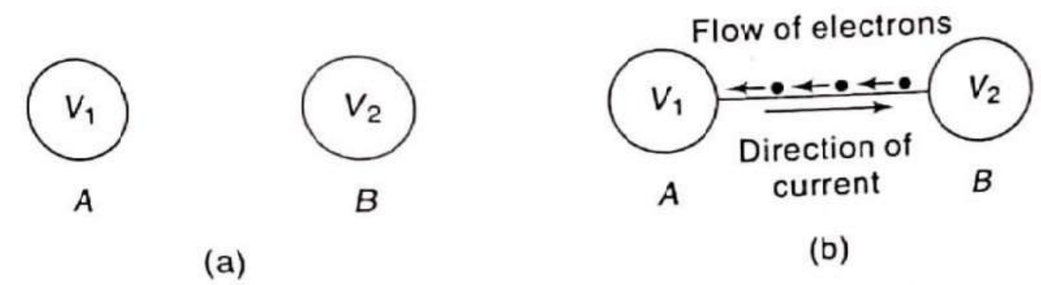

Fig. A.2 Potential difference between two bodies

If the two bodies are joined through a conductor [see Fig. A.2(b)], then electrons will flow from body B to body A. The conventional flow of current will be in the opposite direction, i.e., from body A to body B. When the two bodies attain the same potential, the flow of current stops. Therefore, we arrive at a very important conclusion that current will flow in a circuit if potential difference exists. If there is no potential difference, there will be no current flow. It may be noted that potential difference is sometimes called voltage.

Since the unit of electric potential is volt, one can expect that unit of potential difference will also be volt. It is defined as under:

The potential difference between two points is 1 V if 1 J of work is done in transferring 1 C of charge from one point to the other.

A.7 Electromotive Force and Potential Difference

Electromotive force (emf) is the force that causes the flow of electrons, i.e., flow of current, in the given circuit or maintains the potential difference between two points. For understanding the concept of emf, let us consider a simple cell as shown in Fig. A.3(a). Due to the chemical reaction in the solution, the terminal A has acquired positive charge, while the terminal B has acquired negative charge.

If now a piece of a conductor is connected between the terminals A and B, then flow of electrons starts through the conductor. This is nothing but the flow of current through the conductor. This is shown in Fig. A.3(b). The electrons will flow from terminal B to A and hence, the direction of the current is from A to B, i.e., positive to negative as shown in the figure.

One may think that once the positive charge on terminal A gets neutralized due to the electrons, the flow of electrons will stop. Both the terminals may get

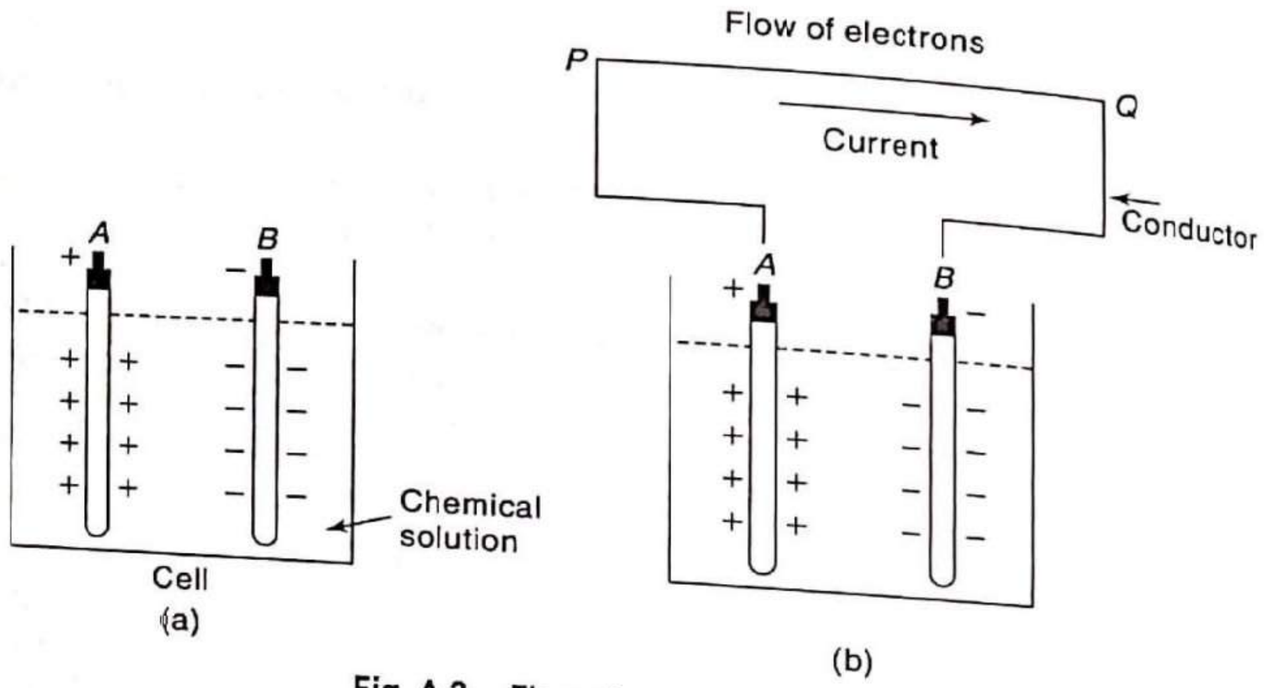

Fig. A.3 Flow of current due to a cell

neutralized after some time. But this does not happen practically because chemical reaction in the solution maintains terminal A positively charged and terminal B negatively charged, which maintains the flow of current. The chemical reaction converts chemical energy into electric energy, which maintains the flow of electrons.

The force that is required to keep electrons in motion, i.e., to convert chemical or any other form of energy into electric energy, is known as **electromotive force** (emf). It is denoted by E, and its unit is volt. Unless there is some emf present in the circuit, a continuous flow of current is not possible.

In the circuit shown in Fig. A.3(b), the current is flowing from point P to point Q. This means that there exists a potential difference (pd) between the points P and Q. This potential difference is called **voltage**, denoted by V and measured in volt.

We can explain the difference between emf and pd as follows. In the cell, two energy transformations are taking place simultaneously. The first is the conversion of the chemical energy of the solution in the cell, into the electrical energy, which is the basic cause of flow of electrons and hence, current. The second transformation happens when the current flows and the piece of metal gets heated up, i.e., electrical energy is converted into heat energy due to flow of the current.

In the first transformation, electrical energy is generated from other form of energy. The force involved in such transformation is electromotive force. When the current flows, due to which the metal gets heated up, i.e., due to existence of potential difference between the two points, voltage exists. And in such a case, electrical energy gets converted into other form of energy. The force involved in such transformation is nothing but the potential difference or voltage. Both emf and potential difference are, in general, referred as voltage.

The following points may be noted for recapitulation:

(i) The emf represents the driving influence that causes a current to flow, and may be interpreted to represent the energy that is used during passing of a unit charge through the source.

(ii) The emf maintains the potential difference, while the potential difference causes current to flow.

(iii) The energy transfer due to the flow of unit charge between the two points in the circuit is termed as potential difference.

A.8 Resistance

The opposition offered by a substance to the flow of electric current is called **resistance**. Since current is the flow of free electrons, resistance is the opposition offered by the substance to the flow of free electrons. This opposition occurs because atoms and molecules of the substance obstruct the flow of these electrons. Certain substances (e.g., metals such as silver, copper, aluminium) offer very little opposition to the flow of electric current and are called conductors. On the other hand, the substances that offer high opposition to the flow of electric current (i.e., flow of free electrons) are called insulators, e.g., glass, rubber, mica, dry wood.

It may be noted here that resistance is the electric friction offered by the substance and causes production of heat with the flow of electric current. The moving electrons collide with atoms or molecules of the substance, each collision resulting in the liberation of minute quantity of heat.

The practical unit of resistance is ohm, represented by the symbol Ω. It is defined as under:

A wire is said to have a resistance of 1 Ω if a potential difference of 1 V across its ends causes 1 A current to flow through it (see Fig. A.4).

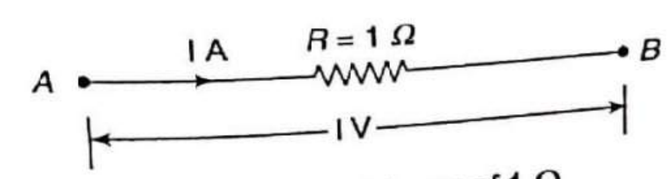

Fig. A.4 Resistance of 1 Ω

There is another way of defining ohm as given below:

A wire is said to have a resistance of 1 Ω if it releases 1 J (or develops 0.24 cal of heat) when a current of 1 A flows through it for 1 sec.

A little reflection shows that second definition leads to the first definition. Thus, 1 A current flowing for 1 sec means that total charge flowing is $Q = I \times t = 1 \times 1 = 1$ C. Now, the charge flowing between A and B (see Fig. A.4) is 1 C and the energy released is 1 J (or 0.24 cal). Obviously, by definition, the potential difference between A and B should be 1 V.

A.9 Factors Influencing Resistance

The resistance R of a conductor depends upon the factors discussed below.

Length If the length of a conductor is increased, the distance that the free electrons must travel is increased and, therefore, the resistance of the conductor is increased. In other words, the resistance of a conductor is directly proportional to its length (l), i.e.,

$$R \propto l$$

Cross-sectional area For a given number of free electrons to flow, if area of cross section of a conductor is increased, the resistance offered to its flow is decreased. It is because now, the free electrons have larger area of path to flow and hence, the opposition is decreased. In other words, resistance of a conductor is inversely proportional to the area of cross section (a) of the conductor, i.e.,

$$R \propto \frac{1}{a}$$

Nature of material Resistance depends upon the nature of the material as different materials offer different resistance to the flow of electric current. For example, a steel wire offers more resistance than a copper wire of the same length and cross-sectional area.

Temperature In general, resistance changes with temperature.

From the first three points (leaving temperature for the time being), we have

$$R \propto \frac{l}{a}$$

or $$R = \rho \frac{l}{a}$$

where ρ (Greek letter 'rho') is a constant and is known as resistivity or specific resistance of the material. Its value depends upon the nature of the material.

Appendix B

Capacitor

Topics discussed:
Capacitor; capacitance; capacitor with uniform medium; capacitor with composite medium; energy stored in a capacitor; charging of a capacitor; discharging of a capacitor

B.1 Capacitor

A **capacitor** or **condenser** consists of two conducting surfaces separated by an insulating material. The conducting surfaces are called the **plates** of the capacitor and the insulating material is called the **dielectric**. The most commonly used dielectrics are air, mica, waxed paper, ceramics, etc. It is well known that different bodies hold different charges when the same potential is applied to them. This charge-holding property of a body is called **capacitance**. In order to store sufficient charge, a device called capacitor, is purposely constructed. It has the property to store electrical energy in the form of electrostatic charges. The capacitor can be connected to a circuit so that this stored energy can be made to flow in the circuit to perform a useful function. Capacitance plays an important role in dc as well as ac circuits. A capacitor is generally named after the dielectric used, e.g., air capacitor, paper capacitor, mica capacitor. The capacitor may be in the form of parallel plates, concentric cylinder or other arrangement.

Figure B.1(a) shows a parallel-plate capacitor having plates A and B connected across the battery of emf V volt with the switch S open. Let, before closing the switch, the capacitor plates are neutral, i.e., there is no charge on the plates and so no potential difference across the plates. When the switch is closed as shown in Fig. B.1(b), the electrons from plate A will be attracted by the positive terminals of the battery and these electrons start accumulating on plate B. The result is that plate A attains more and more positive charge and plate B gets more and more negative charge. So, the potential difference across the plates increases. This action is referred to as **charging of a capacitor**. This process of charging (i.e.,

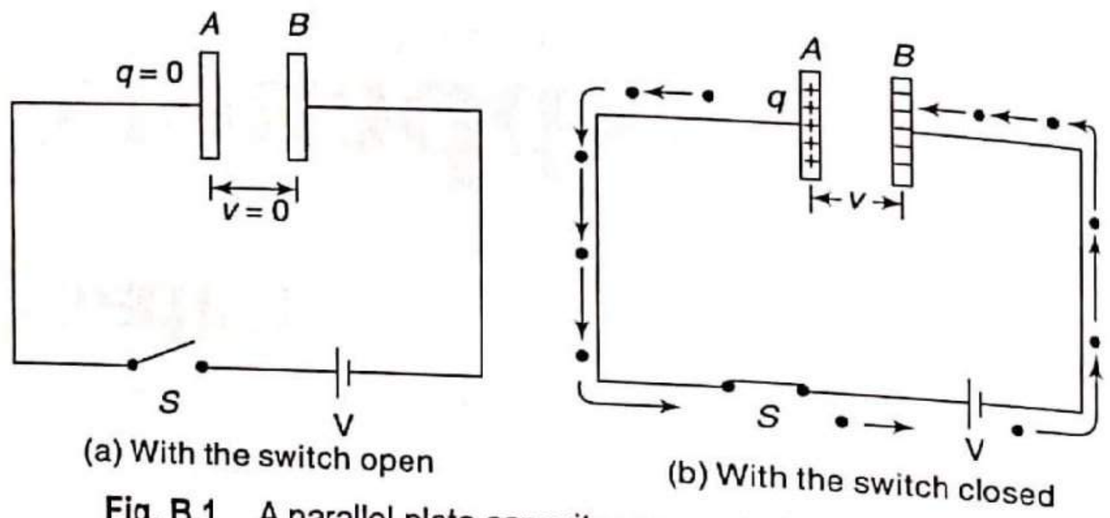

Fig. B.1 A parallel-plate capacitor connected across a battery

detaching the electrons from plate A and accumulating on plate B) continues till the potential difference across the capacitor becomes equal to the battery voltage V. When the capacitor is charged to the battery voltage V, the charging current reduces to zero, i.e., flow of electrons stops and the capacitor is said to be fully charged. If now the switch is opened, the capacitor plates will retain the charges.

The whole charging process takes place in a very short time, a fraction of second. Thus, once charged, the capacitor prevents the flow of direct current. When the capacitor is charged, the two plates carry equal and opposite charges (say $+Q$ and $-Q$). The charge on the capacitor means charge on either plate.

B.2 Capacitance

The ability of a capacitor to store charge is known as its **capacitance.** It has been found experimentally that charge Q stored in a capacitor is directly proportional to the potential difference across it, i.e.,

$$Q \propto V$$

or $$\frac{Q}{V} = \text{constant} = C$$

The constant C is called the capacitance of the capacitor. Hence, capacitance of a capacitor can be defined as the ratio of charge on the capacitor plates to the potential difference across the plates. The capacitance depends upon the area of the plates, distance between the plates and the nature of the insulating material (or the dielectric).

The SI unit of charge is coulomb and that of potential difference is volt. Therefore, the SI unit of capacitance is coulomb/volt, which is also called farad (F). A capacitor is said to have a capacitance of 1 F if a charge of 1 C accumulates on each plate when a potential difference of 1 V is applied across the plates. Farad is an extremely large unit of capacitance. Practical capacitors have capacitances of the order of microfarad (μF) and picofarad (pF).

$$1\ \mu\text{F} = 10^{-6}\ \text{F}$$
$$1\ \text{pF} = 10^{-12}\ \text{F}$$

B.3 Capacitor with Uniform Medium

Figure B.2 shows a parallel-plate capacitor with uniform dielectric. The capacitance of the capacitor can be determined in terms of its dimensions and relative permittivity of the dielectric. Let each plate has area of A square metre and is separated by a uniform dielectric of thickness d metre and relative permittivity ε_r. The potential difference of V volt, applied between the plates, places charges of $+Q$ and $-Q$ on the plates. With reasonable accuracy, it can be assumed that the electric field between the plates is uniform.

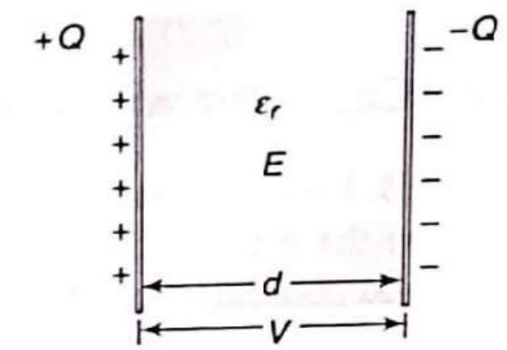

Fig. B.2 A parallel-plate capacitor with uniform dielectric

Electric flux density between the plates, $D = \dfrac{Q}{A}$ C/m^2

Electric intensity at any point is numerically equal to the potential gradient at that point.

Hence, electric intensity between the plates, $E = \dfrac{V}{d}$ V/m

But electric flux density at any point in an electric field is $\varepsilon_0\varepsilon_r$ times the electric intensity at that point, i.e.,

$$D = \varepsilon_0 \varepsilon_r E$$

or $$\frac{Q}{A} = \varepsilon_0 \varepsilon_r E \qquad \left(\because D = \frac{Q}{A}\right)$$

or $$\frac{Q}{A} = \varepsilon_0 \varepsilon_r \frac{V}{d} \qquad \left(\because E = \frac{V}{d}\right)$$

or $$\frac{Q}{V} = \frac{\varepsilon_0 \varepsilon_r A}{d}$$

The ratio $\dfrac{Q}{V}$ is the capacitance C of the capacitor.

So, $$C = \frac{\varepsilon_0 \varepsilon_r A}{d} \qquad \text{(in a medium)}$$

A capacitor that uses air as the dielectric is called air capacitor. The capacitance of an air capacitor is given by

$$C = \frac{\varepsilon_0 A}{d} \qquad (\because \varepsilon_r = 1)$$

Capacitance is directly proportional to relative permittivity of the dielectric (ε_r) and area of the plate (A) and inversely proportional to thickness of the dielectric (d).

B.4 Capacitor with Composite Medium

Figure B.3 shows a parallel-plate capacitor with composite medium. The space between the plates is filled by three dielectrics of thicknesses of d_1, d_2 and d_3 metre and permittivities of ε_{r1} ε_{r2} and ε_{r3} respectively. The potential difference of V volt, applied between the plates, places charges of $+Q$ and $-Q$ on the plates.

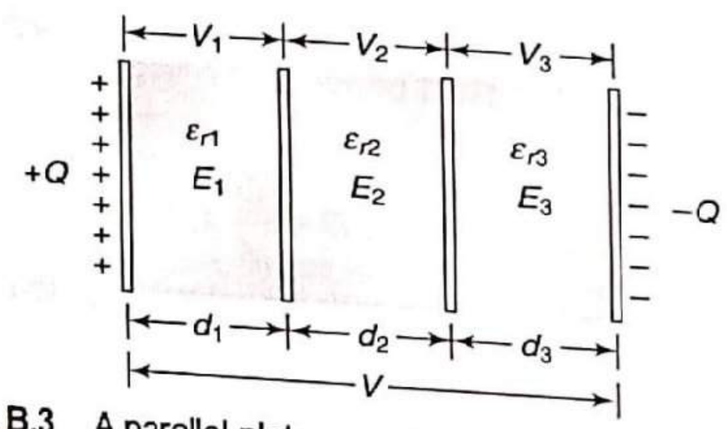

Fig. B.3 A parallel-plate capacitor with composite medium

As total charge on each plate is Q coulomb, the total electric flux produced in each dielectric is also Q coulomb. Thus, the dielectric flux density D in the dielectrics remains the same and is equal to Q/A. However, the electric intensities in the three dielectrics will be different and are given by

$$E_1 = \frac{D}{\varepsilon_0 \varepsilon_{r1}}, \quad E_2 = \frac{D}{\varepsilon_0 \varepsilon_{r2}}, \quad E_3 = \frac{D}{\varepsilon_0 \varepsilon_{r3}}$$

If V is the total potential difference across the capacitor and V_1, V_2 and V_3 are the potential differences across the first, second and third dielectrics respectively, then

$$\begin{aligned} V &= V_1 + V_2 + V_3 \\ &= E_1 d_1 + E_2 d_2 + E_3 d_3 \\ &= \frac{D}{\varepsilon_0 \varepsilon_{r1}} d_1 + \frac{D}{\varepsilon_0 \varepsilon_{r2}} d_2 + \frac{D}{\varepsilon_0 \varepsilon_{r3}} d_3 \\ &= \frac{D}{\varepsilon_0}\left(\frac{d_1}{\varepsilon_{r1}} + \frac{d_2}{\varepsilon_{r2}} + \frac{d_3}{\varepsilon_{r3}}\right) \\ &= \frac{Q}{\varepsilon_0 A}\left(\frac{d_1}{\varepsilon_{r1}} + \frac{d_2}{\varepsilon_{r2}} + \frac{d_3}{\varepsilon_{r3}}\right) \qquad \left(\because D = \frac{Q}{A}\right) \end{aligned}$$

or
$$\frac{Q}{V} = \frac{\varepsilon_0 A}{\left(\frac{d_1}{\varepsilon_{r1}} + \frac{d_2}{\varepsilon_{r2}} + \frac{d_3}{\varepsilon_{r3}}\right)}$$

But $\frac{Q}{V}$ is the capacitance C of the capacitor.

Hence,
$$C = \frac{\varepsilon_0 A}{\left(\frac{d_1}{\varepsilon_{r1}} + \frac{d_2}{\varepsilon_{r2}} + \frac{d_3}{\varepsilon_{r3}}\right)} \text{ F}$$

In general,

$$C = \frac{\varepsilon_0 A}{\sum \frac{d}{\varepsilon_r}} \text{ F}$$

B.5 Energy Stored in a Capacitor

During charging of a capacitor, electrons are pushed to the negative plate, which tends to repel them, and electrons are removed from the positive plate, which tends to attract them. In either case, there is a force that opposes the transfer of electrons from one plate to other. This opposition increases as charge on the plates increases. Thus, during the charging, electrons have to be moved against these opposing forces, and so, charging of the capacitor always involves some expenditure of energy. This energy is stored in an electrostatic field set up in the dielectric medium. On discharging of the capacitor, the field collapses and the stored energy is released.

Consider a capacitor of capacitance C farad being charged from a dc source of V volt as shown in Fig. B.4. During charging at any instant, let the charge on the capacitor is q coulomb and the potential difference across the plates is v volt.

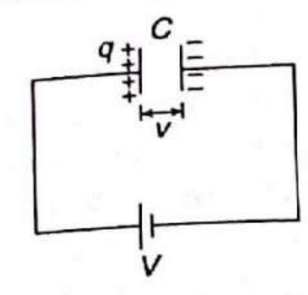

Fig. B.4 A capacitor being charged from a dc source

Then, capacitance, $C = \frac{q}{v}$

We know that potential difference,

$$v = \frac{\text{Work done}}{\text{Charge}} \text{ joule/coulomb}$$

Therefore, when we say that the potential difference across a capacitor is v volt, it means that v joule of work will be done in transferring 1 coulomb of charge from one plate to other. If further, small charge dq is transferred, then work done is given by

$$dW = v\,dq$$
$$= Cv\,dv \qquad (\because q = Cv,\ dq = C\,dv)$$

Hence, the total work done in raising the potential of uncharged capacitor to V volt will be as follows:

$$W = \int_0^V dW$$
$$= \int_0^V Cv\,dv$$
$$= C\left[\frac{v^2}{2}\right]_0^V$$

or $$W = \frac{1}{2}CV^2 \text{ joule}$$

This work done is stored in the electrostatic field set up in the dielectric.

Hence, energy stored in the capacitor,

$$E = \frac{1}{2}CV^2 \text{ joule}$$
$$= \frac{1}{2}QV \text{ joule} \qquad \left(\because C = \frac{Q}{V}\right)$$
$$= \frac{Q^2}{2C} \text{ joule} \qquad \left(\because V = \frac{Q}{C}\right)$$

B.6 Charging of a Capacitor

The more usual way of charging a capacitor in an electric circuit is from a fixed-value dc supply. In order to control the rate of charging, a resistance is connected in series with the capacitor. As we shall see, the rate of charging depends upon the product RC. Greater the value of RC, more will be the time taken by the capacitor to charge to the final value and vice versa.

Figure B.5 depicts an arrangement by which a capacitor C may be charged through a high resistance R from a dc supply of V volt. The voltage across C can be measured by a suitable voltmeter. When switch S is connected to 'a', the capacitor is charged, but when it is connected to 'b', the capacitor is short circuited through R and is thus discharged. During charging, the voltage across the capacitor does not rise to V instantaneously but builds up slowly.

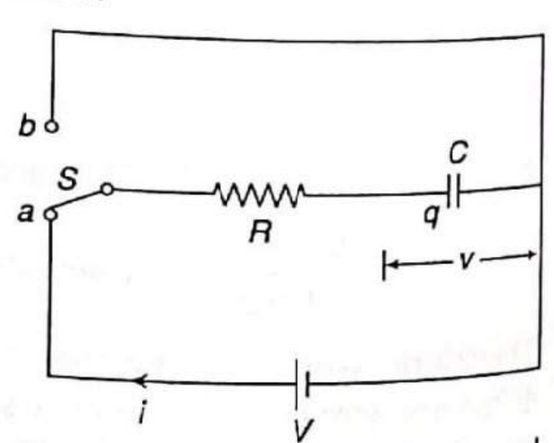

Fig. B.5 A capacitor being charged from a dc supply through a high resistance

Let initially the capacitor is uncharged and when the switch is connected to 'a', the capacitor starts charging up, and charging current flows in the circuit. The charging current is maximum at the instant of switching and decreases gradually as the voltage across the capacitor increases. When the capacitor is charged to the applied voltage V, the charging current becomes zero.

At the switching instant

At the instant the switch is closed, the voltage across the capacitor is zero since we started with an uncharged capacitor. The entire voltage V is dropped across the resistance R and the charging current is maximum (we may denote it by I_m).

So, initial charging current, $I_m = \dfrac{V}{R}$

At any instant

After having closed the switch, the charging current starts decreasing and the voltage across the capacitor gradually increases. Let at any instant during charging,

i = charging current
v = potential difference across C
q = charge on capacitor = Cv

According to Kirchhoff's voltage law, the applied voltage V is equal to the sum of the voltage drops across the resistor and the capacitor, i.e.,

$$V = v + iR \tag{B.1}$$

Since $i = \dfrac{dq}{dt} = \dfrac{d(Cv)}{dt} = C\dfrac{dv}{dt}$, we get

$$V = v + CR\frac{dv}{dt}$$

or $$V - v = CR\frac{dv}{dt}$$

or $$-\frac{dv}{V - v} = -\frac{dt}{RC}$$

Integrating both sides,

$$\int -\frac{dv}{V - v} = \int -\frac{dt}{RC}$$

or $$\log_e(V - v) = -\frac{t}{RC} + K \tag{B.2}$$

where K is a constant whose value can be determined from the initial conditions.

At the instant of transferring the switch S to 'a', $t = 0$ and $v = 0$. Substituting these values in Eq. (B.2), we get

$$\log_e V = K$$

Putting the value of K in Eq. (B.2), we get

$$\log_e(V - v) = -\frac{t}{RC} + \log_e V$$

or $$\log_e \frac{V - v}{V} = -\frac{t}{RC}$$

or $$\frac{V - v}{V} = e^{-t/RC}$$

or $$v = V(1 - e^{-t/RC}) \tag{B.3}$$

This is the expression for variation of voltage across the capacitor (v) with time (t) and is represented graphically in Fig. B.6. Note that growth of voltage across the capacitor follows an exponential law. An inspection of Eq. (B.3) reveals that as t increases, the term $e^{-t/RC}$ gets smaller and voltage v across capacitor gets larger.

Since $v = q/C$ and $V = Q/C$, Eq. (B.3) becomes

$$\frac{q}{C} = \frac{Q}{C}(1 - e^{-t/RC})$$

or $$q = Q(1 - e^{-t/RC}) \tag{B.4}$$

where q is the charge at any time t and Q is the final charge on the capacitor.

Again, the increase of charge on the capacitor plates follows the exponential law. From Eq. (B.1), we have $V - v = iR$

From Eq. (B.3), $V - v = Ve^{-t/RC}$

So, $$iR = Ve^{-t/RC}$$

or $$i = \frac{V}{R} e^{-t/RC}$$

or $$i = I_m e^{-t/RC}$$

where $I_m (= V/R)$ is the initial charging current. Again, the charging current decreases following the exponential law. This is also represented graphically in Fig. B.6.

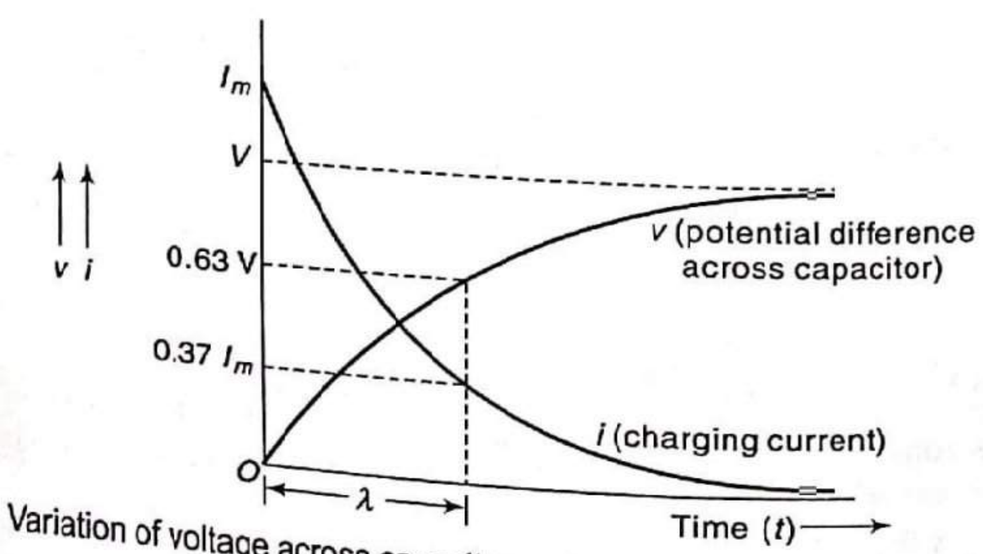

Fig. B.6 Variation of voltage across capacitor and current through capacitor during charging

Time constant

The product RC in Eq. (B.3) has the dimensions of time so that exponent of e is a whole number. The quantity RC is called the **time constant** of the circuit and has effects on the charging and discharging time. The larger the time constant, the longer the charging and discharging process, i.e., it will take more time to reach the steady-state value.

So, time constant, $\lambda = RC$ second

We know that the expression for variation of voltage across the capacitor (v) with time (t) is given by

$$v = V(1 - e^{-t/RC})$$

Now, if we take the time interval $t = \lambda (= RC)$, then

$$v = V(1 - e^{-RC/RC})$$
$$= V(1 - e^{-1})$$
$$= 0.632 \text{ V}$$

Hence, the time constant can be defined as the time required for a capacitor voltage to reach 0.632 of its final steady value V.

We know that the expression of charging current (i) w.r.t. time (t) is given by

$$i = I_m e^{-t/RC}$$

Now, if we take the time interval $t = \lambda (= RC)$, then

$$i = I_m e^{-RC/RC}$$
$$= I_m e^{-1}$$
$$= 0.37\ I_m$$

Hence, the time constant can also be defined as the time required for the charging current to fall to 0.37 of its initial maximum value I_m.

B.7 Discharging of a Capacitor

Refer to Fig. B.5 once again. Let the capacitor is fully charged to V volt. Now, when switch S is shifted to 'b', the capacitor is discharged through R. During discharging, the capacitor voltage decreases exponentially and gradually reaches to zero when the capacitor is fully discharged. At switching instant, the discharging current is maximum ($I_m = V/R$), and then it decays gradually to zero when the capacitor is fully discharged.

Let at any instant during discharging,

i = discharging current

v = potential difference across C

q = charge on the capacitor = Cv

According to Kirchhoff's voltage law, we have

$$v + iR = 0$$

or $$v + CR\frac{dv}{dt} = 0 \qquad \left(\because i = C\frac{dv}{dt}\right)$$

or $$\frac{dv}{v} = -\frac{dt}{RC}$$

Integrating both sides,

$$\int \frac{dv}{v} = \int -\frac{dt}{RC}$$

Hence, $\log_e v = -\frac{t}{RC} + K$ (B.6)

At the instant of shifting the switch S to 'b', $t = 0$ and $v = V$. Putting these values in Eq. (B.6), we get

$$\log_e V = K$$

Putting the value of K in Eq. (B.6), we get

$$\log_e v = -\frac{t}{RC} + \log_e V$$

or $$\log_e \frac{v}{V} = -\frac{t}{RC}$$

or $$\frac{v}{V} = e^{-t/RC}$$

So, $$v = V e^{-t/RC} \quad \text{(B.7)}$$

This is the expression for variation of voltage across the capacitor (v) with time (t) and is represented graphically in Fig. B.7. In this expression, the quantity RC ($= \lambda$) is the time constant and has the dimensions of time.

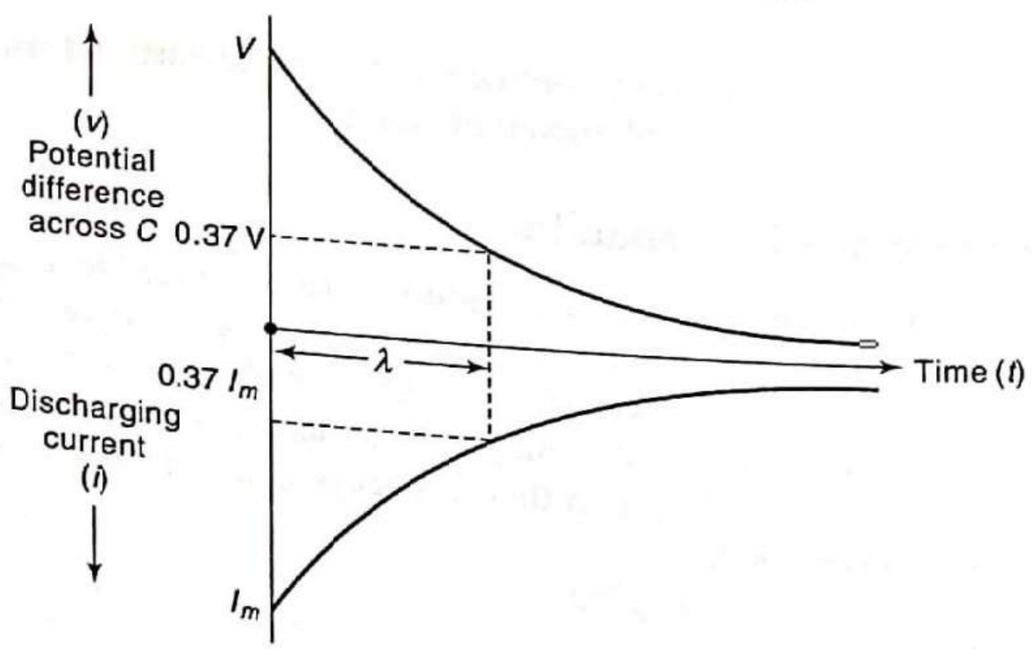

Fig. B.7 Variation of voltage with time

Since $v = q/C$ and $V = Q/C$, Eq. (B.7) becomes

$$\frac{q}{C} = \frac{Q}{C} e^{-t/RC}$$

or $$q = Qe^{-t/RC} \quad \text{(B.8)}$$

where q is the charge at any time t and Q is the initial charge on the capacitor.

Equation (B.8) indicates that the decrease of charge on the capacitor plates follows the exponential law.

Similarly, we can write

$$i = -I_m e^{-t/RC} \quad \text{(B.9)}$$

This is the expression of discharging current (i) with time (t) and is represented graphically in Fig. B.7. Note that the negative sign is attached to I_m. This is because the discharging current flows in the direction opposite to that in which the charging current flows.

Appendix C

Relation between Magnetic and Electric Fields

Topics discussed:
Magnetic field; electromagnetism; magnetic circuit; magnetic hysteresis; electromagnetic induction

C.1 Magnetic Field

We know that electric field exists near a charged object. Similarly, magnetic field exists around a magnet. If an isolated magnetic pole is brought near a magnet, it experiences a force. The region near the magnet where forces act on the magnetic poles is called magnetic field. The magnetic field is strongest near the pole and goes on decreasing in strength as we move away from the magnet. Thus, the area around a magnet or magnetic pole within which its influence is perceptible, is called its **magnetic field**. A small compass needle can be used to map a magnetic field. Iron filings may be used to demonstrate the shape and distribution of the magnetic field in any horizontal plane. These filings set themselves in the form of curved chains between the poles as shown in Fig. C.1(a). Such continuous curves in a magnetic field are normally termed as magnetic lines of force. These lines of force travel from the north to south pole as shown in Fig. C.1(b). These are assumed to continue through the magnet to the point from which they have emerged. Thus, each line of force forms a closed path.

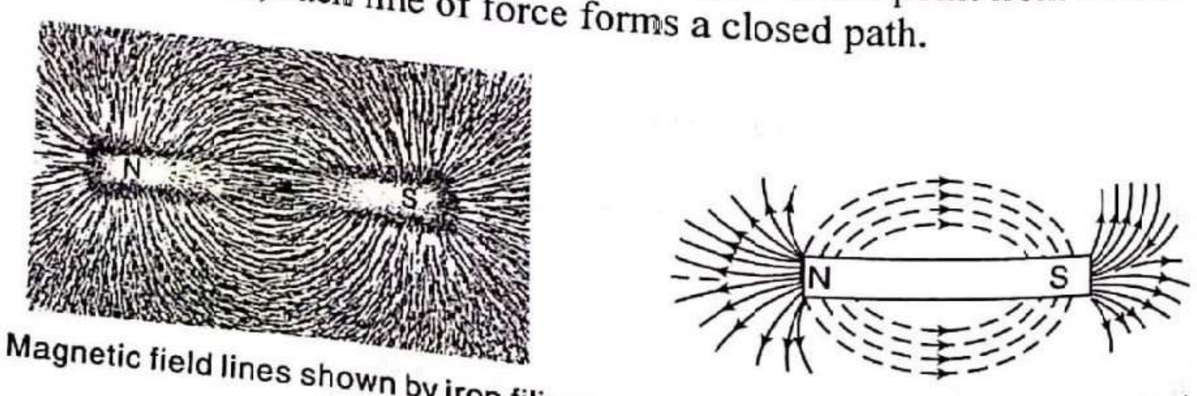

(a) Magnetic field lines shown by iron filings (b) Representation of magnetic field

Fig. C.1 Magnetic field

Although the magnetic lines of force have no real existence and are purely imaginary, they are a useful concept to describe various magnetic effects. The magnetic lines of force possess the following properties:

(i) Each magnetic line of force forms a closed loop.
(ii) They always start from the north pole and end in the south pole and are continuous through the body of the magnet.
(iii) They never intersect each other.
(iv) They have the tendency to take an easy magnetic path.
(v) They act as they are in tension, i.e., as stretched elastic lines.

C.1.1 Magnetic Flux

The total number of lines of force in a magnetic field is called the **magnetic flux.** It is denoted by Φ. The unit of magnetic flux is weber (Wb). One weber of flux comprises 10^8 lines. To identify the magnetic field quantitatively (i.e., with numbers), we generally use the term magnetic flux.

C.1.2 Magnetic Flux Density

The **magnetic flux density** is the flux per unit area of a surface at right angles to the magnetic field. This is also known as magnetic induction. It is denoted by B.

$$\text{Flux density, } B = \frac{\Phi}{A} \text{ Wb/m}^2$$

where Φ = magnetic flux in Wb
A = area in m^2 normal to the flux

The SI unit of magnetic flux density is Wb/m^2 or tesla. Flux density is a measure of field concentration, i.e., amount of flux in each square metre of the field. In practice, it is much more important than the total amount of flux.

C.1.3 Permeability

The permeability of a material means its conductivity for magnetic flux. The greater the permeability of a material, the greater is its conductivity for magnetic flux and vice versa. Let us understand its meaning more clearly.

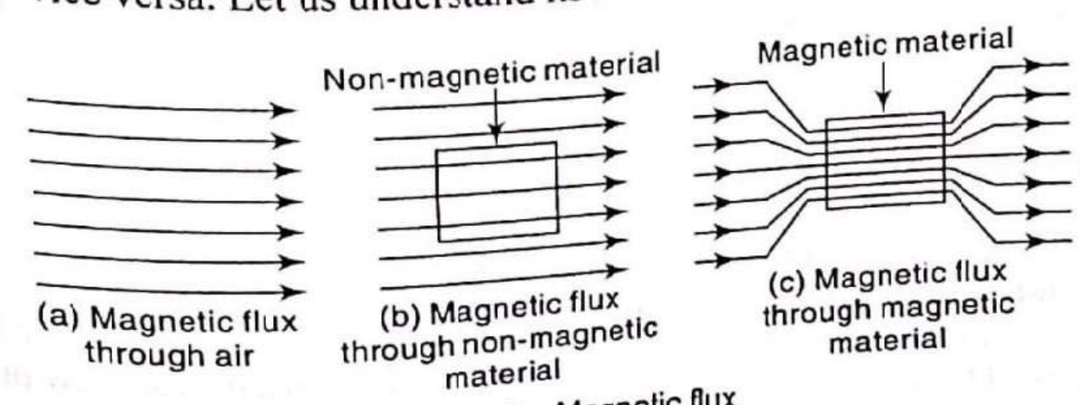

Fig. C.2 Magnetic flux

As shown in Fig. C.2, magnetic flux can pass through any material. In Fig. C.2(a), it is shown passing through air. Similarly, in Fig. C.2(b), magnetic

flux lines are passing through non-magnetic material as well as through air. In Fig. C.2(c), it is seen that magnetic flux prefers to pass through magnetic material (iron) rather than to pass through air. Thus, we can conclude that ability to conduct magnetic flux is more in case of iron in comparison with air and other non-magnetic materials.

Air or vacuum is the poorest conductor of magnetic flux. The absolute (or actual) permeability μ_0 of air or vacuum is $4\pi \times 10^{-7}$ H/m. The absolute (or actual) permeability μ of magnetic materials is greater than μ_0. The ratio μ/μ_0 is called the **relative permeability** of the material and is denoted by μ_r, i.e.,

$$\text{relative permeability, } \mu_r = \frac{\mu}{\mu_0}$$

where μ = absolute (or actual) permeability of the material
μ_0 = absolute permeability of the air or vacuum
μ_r = relative permeability of the material

Obviously, the relative permeability for air or vacuum would be $\mu_0/\mu_0 = 1$. The value of μ_r for all non-magnetic materials is also 1. However, relative permeability of magnetic materials is very high. Due to high permeability of magnetic materials (e.g., iron, steel, and other magnetic alloys), they are widely used for the cores of all electromagnetic equipment.

C.1.4 Relation between Magnetic Flux Density and Field Intensity

At any point in a magnetic field, field strength or field intensity H is the force maintaining the magnetic flux and producing a particular value of flux density B at that point. Hence, the field intensity H is the cause and the flux density B is the effect. Thus, the flux density can be assumed proportional to the field intensity in a magnetic field that is in free space, $B = \mu_0 H$.

So, $$\frac{B}{H} = \mu_0$$

where μ_0 is called permeability of air or vacuum and its value is $4\pi \times 10^{-7}$ H/m.

The flux density also depends upon the nature of the medium. Thus, if the relative permeability of the medium is μ_r, then the flux density B at any point in the magnetic field is given by

$$B = \mu_0 \mu_r H$$

C.2 Electromagnetism

The operation of the electrical machines such as transformer, generator, motor, etc. depends largely upon the magnetism. Electricity can be generated from magnetism, and the converse of it is also true, i.e., electricity can also produce magnetism. The production of magnetism from electricity is called **electromagnetism.**

When an electric current flows through a conductor, magnetic field is set up all along the length of the conductor. Figure C.3 shows the magnetic field produced

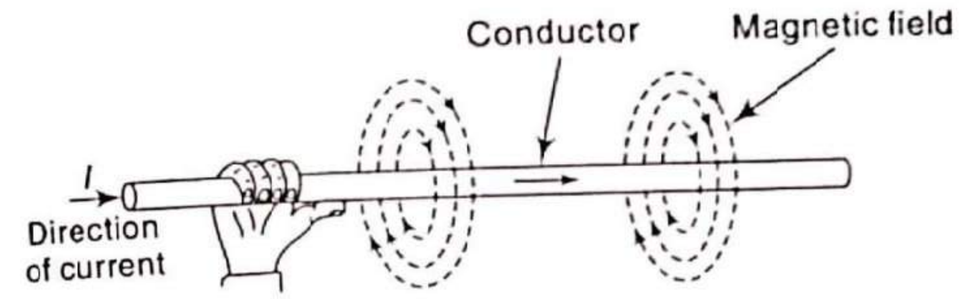

Fig. C.3 Magnetic field produced by electric current

by the current flowing in a straight conductor. The magnetic lines of force are in the form of concentric circles around the conductor. The direction of lines of force depends upon the direction of the current and may be determined by right hand rule. Hold the conductor with the right hand with the thumb pointing in the direction of the current (see Fig. C.3). Then the fingers will point in the direction of the magnetic field around the conductor. Applying this rule to Fig. C.3, it is clear that when viewed from left hand side, the direction of magnetic lines of force will be clockwise.

The following points may be noted about the magnetic effect of electric current:

(i) The greater the current through the conductor, the stronger the magnetic field and vice versa.
(ii) The magnetic field near the conductor is stronger and becomes weaker and weaker as we move away from the conductor.
(iii) The magnetic lines of force round the conductor will be either clockwise or anticlockwise, depending upon the direction of the current. One may use right hand rule to determine the direction of the magnetic field round the conductor.
(iv) The shape of the magnetic field depends upon the shape of the conductor.

C.2.1 Typical Electromagnetic Fields

A current-carrying conductor may be in the form of a straight wire, a loop of one turn, or a coil of several turns. The shape of the magnetic field would eventually depend upon the shape of the conductor. We shall now discuss magnetic fields produced by some current-carrying conductor arrangements.

Long straight conductor

If a straight long conductor is carrying current, the magnetic lines of force will be concentric circles round the conductor as shown in Fig. C.4. In Fig. C.4(a), a conductor is carrying current into the plane of paper (usually represented by a

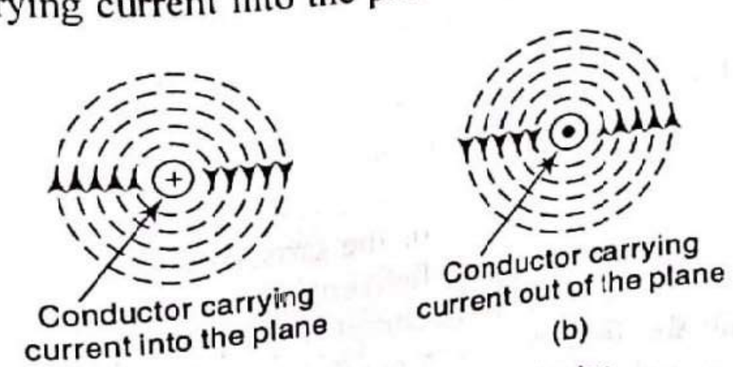

Fig. C.4 Long straight conductor

cross inside the cross section of the conductor). Applying right hand rule, it is clear that the direction of the magnetic lines of force will be clockwise. In Fig. C.4(b), the conductor is carrying current out of the plane of paper (usually represented by a dot inside the cross section of the conductor). Clearly, the direction of the magnetic lines of force will be anticlockwise.

Parallel conductors

Consider two parallel conductors A and B placed close together and carrying current into the plane of the paper as shown in Fig. C.5(a). The magnetic lines of force will be clockwise around each conductor. In the space between A and B, the lines of force due to the conductors are in the opposite direction and hence, they cancel out each other. This results in a field that entirely surrounds the conductors as shown in Fig. C.5(b).

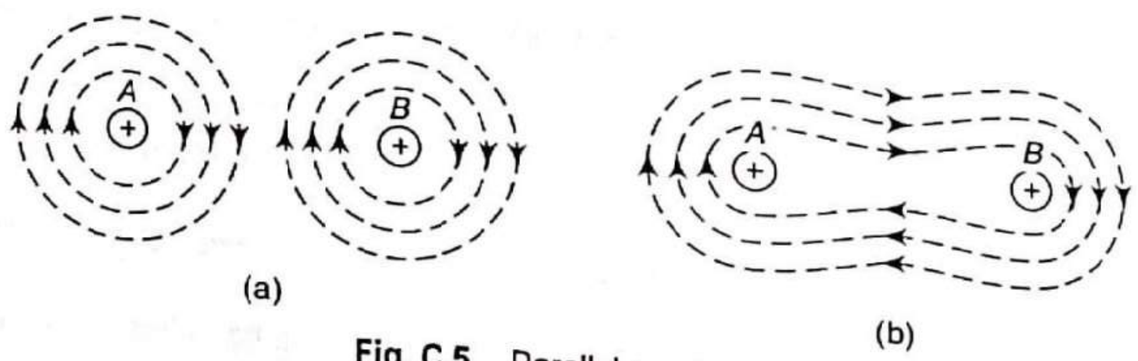

Fig. C.5 Parallel conductors

If there are several parallel conductors placed close together and carrying current into the plane of the paper as shown in Fig. C.6(a), the magnetic field envelops the conductors. If the direction of the current is reversed, the direction of field is also reversed as shown in Fig. C.6(b).

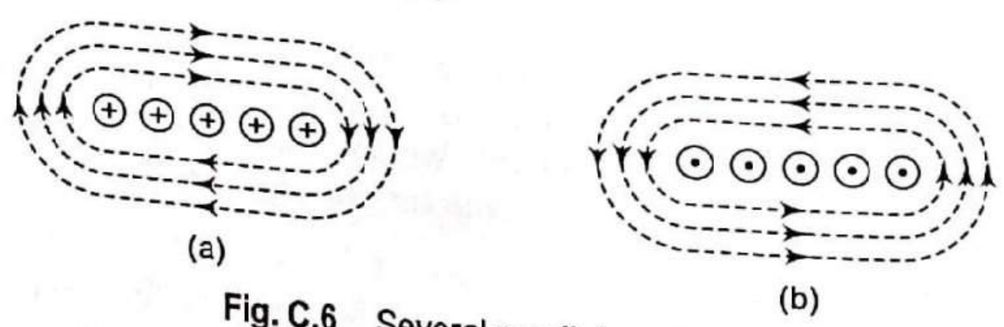

Fig. C.6 Several parallel conductors

Coil of several turns

Consider a coil of several turns wound on a hollow tube or iron bar as shown in Fig. C.7(a). Such an arrangement is called a **solenoid**. Suppose current flows through the coil in the direction shown in the figure. In the upper part of each turn (at points 1, 2, 3, 4, and 5), the current is flowing into the plane of the paper and in the lower part of each turn (at points 6, 7, 8, and 9), it is flowing out of the plane of the paper. This is shown in the cross-sectional view of the coil in Fig. C.7(b). It is clear that clockwise field entirely surrounds the conductors 1, 2, 3, 4, and 5, while anticlockwise field completely envelops the conductors 6, 7, 8, and 9. As a result, the field becomes similar to that of a bar magnet with flux emerging from one end of the coil and entering the other.

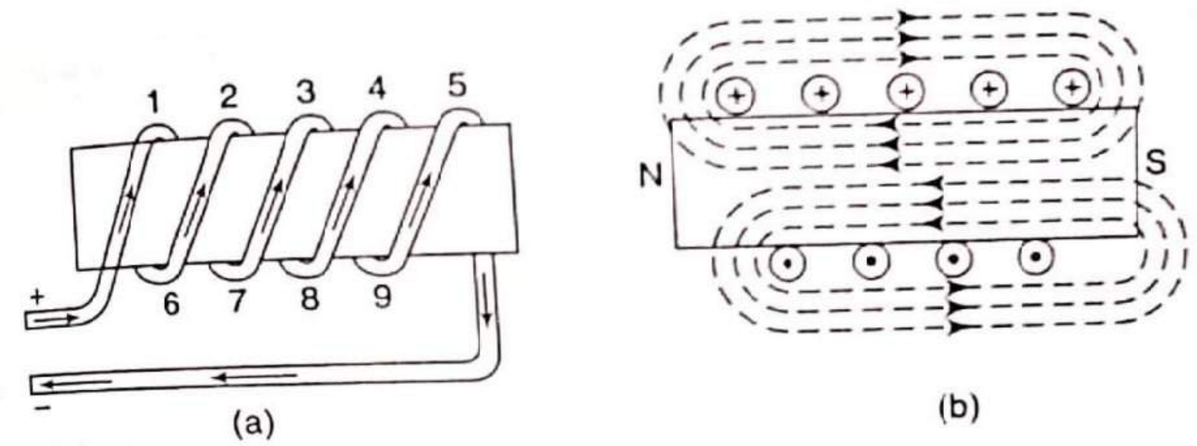

Fig. C.7 A coil carrying current

It is clear that left hand face of the coil [see Fig. C.7(b)] becomes a N-pole and right hand face a S-pole. The magnetic polarity of the coil can also be determined by the *right hand rule for coil*. Grasp the whole coil with right hand so that the fingers are curled in the direction of the current. Then the thumb stretched parallel to the axis of the coil will point towards the N-pole end of the coil [see Fig. C.8]. It may be noted that both right hand rules (for a conductor and for a coil) discussed so far can be applied in reverse. If we know the direction of the magnetic field encircling a conductor or the magnetic polarity of a coil, we can determine the direction of the current by applying appropriate right hand rule.

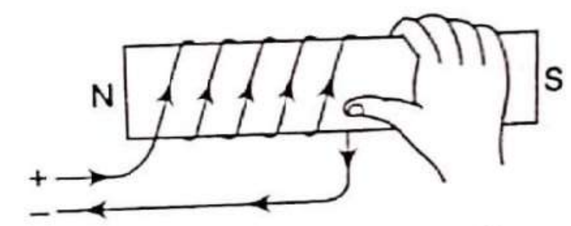

Fig. C.8 Determining magnetic polarity using right hand rule

C.3 Magnetic Circuit

The basic characteristic of the magnetic lines of force is that they form closed loops around and through the magnetic material. The closed path followed by a magnetic flux is called a **magnetic circuit** just as the closed path followed by current is called an electric circuit. In a magnetic circuit, the magnetic flux leaves the N-pole, passes through the entire circuit, and returns to the starting point. A magnetic circuit usually consists of materials having high permeability, e.g., iron, soft steel. This is because these materials offer very small opposition to the magnetic flux. The most usual way of producing magnetic flux is by passing electric current through a wire of a number of turns wound over a magnetic material. This helps in exercising excellent control over the magnitude, density and direction of the magnetic flux.

The electrical machines such as transformer, generator, motor, etc. have magnetic circuits, i.e., closed flux paths. In order that these devices function efficiently, their magnetic circuits must be properly designed to obtain the required magnetic conditions.

Figure C.9 shows a magnetic circuit in which a coil of N turns is wound on an iron core. When a current I is passed through the coil, a magnetic flux Φ is set up in the core. The flux follows the closed path $ABCDA$ and hence, $ABCDA$ is the

magnetic circuit. Suppose the mean length of the magnetic circuit (i.e., length $ABCDA$) is l metre, cross-sectional area of the core is a m^2, and the relative permeability of the core material is μ_r.

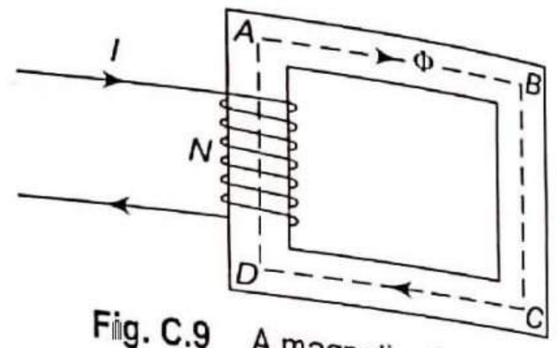

Fig. C.9 A magnetic circuit

The amount of the magnetic flux set up in the core depends upon current (I) and number of turns (N). If we increase the current or the number of turns, the amount of the magnetic flux also increases and vice versa. The product NI is called **magnetomotive force** (mmf) and determines the amount of flux set up in the magnetic circuit.

The opposition that the magnetic circuit offers to the flux is called **reluctance**. It depends upon length of the magnetic circuit, area of cross section of the circuit and nature of the material that makes up the magnetic circuit.

Flux density in the material, $B = \dfrac{\Phi}{a}$ Wb/m^2

Magnetizing force in the material, $H = \dfrac{B}{\mu_0 \mu_r} = \dfrac{\Phi}{a\mu_0 \mu_r}$ AT/m

According to work law, the work done in moving a unit magnetic pole once round the magnetic circuit (i.e., path $ABCDA$ in this case) is equal to the ampere-turns enclosed by the magnetic circuit.

Hence, the work done in moving a unit magnetic pole once round the magnetic circuit = NI.

We know that H means force acting on a unit magnetic pole. If the unit pole is moved once round the magnetic circuit (i.e., distance covered is l), then the work done = $H \times l$.

So, $$H \times l = NI$$

or $$\frac{\Phi}{a\mu_0 \mu_r} \times l = NI$$

or $$\Phi = \frac{NI}{\left(\dfrac{l}{a\mu_0 \mu_r}\right)}$$

As discussed earlier, the quantity NI, which produces the magnetic flux, is the magnetomotive force (mmf). It is measured in ampere-turns. The quantity $l/a\mu_0\mu_r$ is called the reluctance of the magnetic circuit. Reluctance is the opposition that the magnetic circuit offers to flux.

Hence, flux, $$\Phi = \frac{\text{mmf}}{\text{reluctance}} \qquad \text{(C.1)}$$

Note that the relationship expressed in Eq. (C.1) has a strong resemblance to Ohm's law for electric circuit ($I = E/R$). The mmf is analogous to the emf in the

electric circuit, the reluctance is analogous to the resistance and flux is analogous to the current. Because of this similarity, Eq. (C.1) is sometimes referred to as Ohm's law of magnetic circuit.

C.3.1 Important Terms related to Magnetic Circuit

The terms that we generally come across while studying magnetic circuits are discussed below.

Magnetomotive force (mmf)

The current flowing in an electric circuit is due to the existence of electromotive force (emf) across the circuit. By analogy, to drive magnetic flux through a magnetic circuit, a magnetomotive force is necessary. The magnetomotive force (mmf) is a magnetic pressure that sets up or tends to set up flux in a magnetic circuit and may be defined as under:

The work done in moving a unit magnetic pole once round the magnetic circuit is called the **magetomotive force** (mmf). It is equal to the product of the current and the number of turns of the coil, i.e.,

mmf = NI ampere-turns (or AT)

Magnetic field strength

If the magnetic circuit of a magnetic material is homogeneous and of uniform cross-sectional area, the magnetomotive force per metre length of the magnetic circuit is called the **magnetic field strength**. It is represented by H. Hence, the magnetic field strength is given by

$$H = \frac{\text{mmf}}{l} = \frac{NI}{l} \text{ AT/m}$$

where l is the length of the magnetic flux path in metre.

Reluctance

The opposition that a magnetic circuit offers to flux is called **reluctance**. The reluctance of a magnetic circuit depends upon its length, area of cross section and permeability of the material that makes up the magnetic circuit. Its unit is AT/Wb. Thus,

$$\text{Reluctance, } S = \frac{l}{a\mu_0 \mu_r}$$

Reluctance in a magnetic material corresponds to resistance ($R = \rho l/a$) in an electric circuit. Both of them are proportional to length and inversely proportional to cross-sectional area. Also they are dependent upon the nature of material of the circuit. Magnetic materials (e.g., iron, steel) have a low reluctance because the value of μ_r for them is very large. On the other hand, non-magnetic materials (e.g., air, wood, copper, brass) have a high reluctance because they posses the least value of μ_r, 1 in case of all non-magnetic materials.

Permeance

It is the reciprocal of reluctance and is a measure of the ease with which flux can pass through the material. Its unit is Wb/AT. So,

$$\text{Permeance} = \frac{1}{\text{reluctance}} = \frac{a\mu_0\mu_r}{l}$$

Permeance of a magnetic circuit corresponds to conductance in an electric circuit.

C.3.2 Comparison of Magnetic and Electric Circuits

There are many points of similarity between magnetic and electric circuits. However, the two circuits are not analogous in all respects. The similarities and dissimilarities between magnetic and electric circuits are given in Tables C.1 and C.2 respectively. A comparison of the two circuits is also depicted in Fig. C.10.

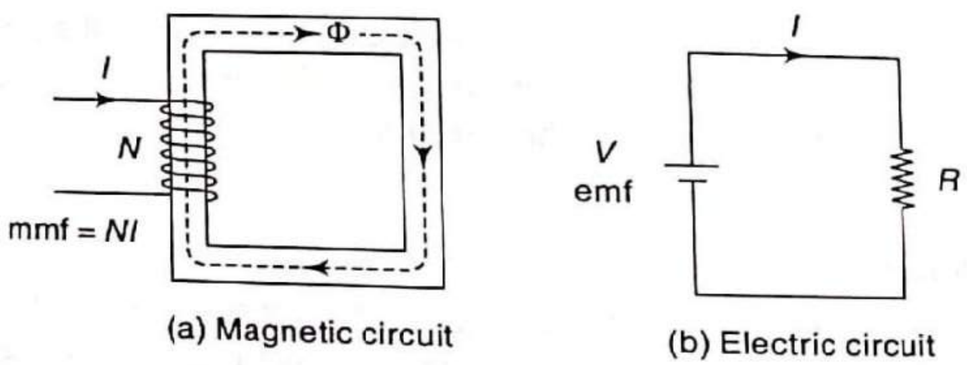

Fig. C.10 Magnetic and electric circuits

Table C.1 Similarities between magnetic and electric circuits

1. The closed path for magnetic flux is called a magnetic circuit.	1. The closed path for electric current is called an electric circuit.
2. Flow is of flux (Φ).	2. Flow is of current (I).
3. The mmf is the cause of flow of flux.	3. The emf is the cause of flow of current.
4. Reluctance, $S = l/a\mu_0\mu_r$.	4. Resistance , $R = \rho l/a$.
5. Flux density, $B = \Phi/a$ Wb/m^2.	5. Current density, $J = I/a$ A/m^2.
6. The mmf drop = ΦS.	6. Voltage drop = IR.
7. Magnetic intensity, $H = NI/l$ AT/m.	7. Electric intensity, $E = V/d$.
8. Flux, Φ = mmf/reluctance (S).	8. Current, I = emf/resistance (R).

Table C.2 Dissimilarities between magnetic and electric circuits

1. Magnetic flux does not actually flow in a magnetic circuit.	1. The electric current actually flows in an electric circuit.
2. There is no magnetic insulator. For example, flux can be set up even in air (the best known magnetic insulator) with reasonable mmf.	2. There are a number of electric insulators. For example, air is a very good insulator and current can not pass through it.
3. The value of μ_r is not constant for a given magnetic material. It varies	3. The value of resistivity (ρ) varies very slightly with temperature. Therefore, the

(Contd.)

(Contd.)

considerably with flux density (B) in the material. This implies that reluctance of a magnetic circuit is not constant, rather it depends upon B.	resistance of an electric circuit is practically constant. This salient feature calls for different approach to the solution of magnetic and electric circuits.
4. No energy is expended in a magnetic circuit. In order words, energy is required in creating the flux and not in maintaining it.	4. When current flows through an electric circuit, energy is expended so long as the current flows. The expended energy is dissipated in the form of heat.
5. It is very difficult to confine the flux into a desired path, and a certain amount of leakage flux is always associated with magnetic materials.	5. Current can be easily confined into a desired path just by providing a conducting path for it.

C.4 Magnetic Hysteresis

When a magnetic material is subjected to a cycle of magnetization (i.e., it is magnetized first in one direction and then in the other direction), it is found that the flux density B in the material lags behind the applied magnetizing force H. The phenomenon of lagging of the flux density (B) behind the magnetizing force (H) in a magnetic material subjected to a cycle of magnetization is known as **magnetic hysteresis.**

Consider a piece of an unmagnetized iron bar AB within the field of a solenoid to magnetize it [see Fig. C.11(a)]. The field H produced by the solenoid, called magnetizing field, whose value can be altered (increased or decreased) by altering (increasing or decreasing) the current passing through the solenoid. If we increase slowly the value of magnetic field (H) from zero to the maximum value, the value of flux density (B) varies along '1' to '2' [see Fig. C.11(b)], and the magnetic material (viz. iron bar) finally attains the maximum value of flux density (B_m) at point '2', and thus, becomes magnetically saturated. In other words, the flux density is maximum at point '2'.

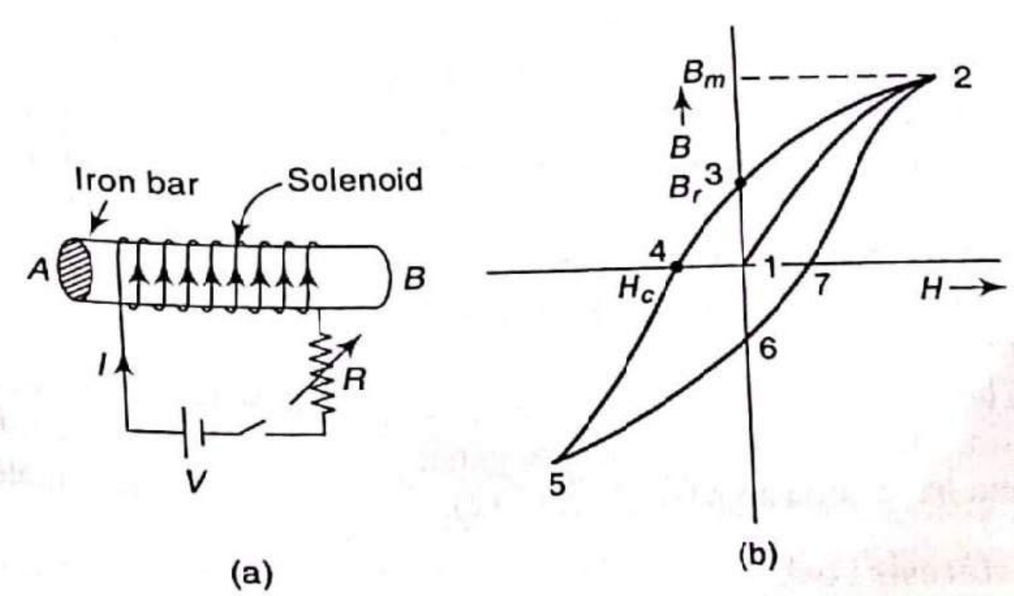

Fig. C.11 Magnetization of iron bar and hysteresis loop

Now, if the value of H is decreased slowly (by decreasing the current in the solenoid), the corresponding value of flux density (B) does not decrease along '2' to '1', but decreases somewhat less rapidly along '2' to '3'. Consequently, during the reversal of magnetization, the value of B is not zero, but is B_r at $H = 0$. In other words, during the period of removal of magnetization force (H), the iron bar is not completely demagnetized. The value of $B = B_r$ is the measure of the retentivity (or remanence) of the material (of iron bar). In order to demagnetize the iron bar completely, we have to supply the demagnetization force (H) in the opposite direction (i.e., by reversing the direction of current in the solenoid). The value of B is reduced to zero at point '4', when $H = H_c$. This value of H required to remove the residual magnetization is known as **coercive force**, and is a measure of coercivity of the material, i.e., the tenacity with which the material holds to it its magnetism.

If after obtaining zero value of magnetism, the value of H is made more negative, the iron bar again reaches finally a state of magnetic saturation (or maximum flux density) at the point '5', which represents negative saturation. Now, if the value of H is increased from negative saturation to positive saturation, a curve '5, 6, 7, 2' is obtained. The closed loop '2, 3, 4, 5, 6, 7, 2' thus represents one complete cycle of magnetization, and this is known as hysteresis loop [see Fig. C.11(b)].

From the hysteresis loop, it may be noted that B always lags behind H, and the two never attain zero values simultaneously. The lagging of flux density (B) behind the magnetic field (H) during the reversal cycle of magnetization is called **hysteresis** (means to lag behind). Alternatively, it is that quality of a magnetic substance due to which energy is dissipated in it on the reversal of its magnetism.

C.4.1 Hysteresis Loops of Soft and Hard Magnetic Materials

Soft magnetic materials such as silicon iron (3 to 4% Si content) are used in electric machines and transformers. Their magnetization can be changed rapidly without much friction. Their hysteresis loops are generally characterized tall, but narrow, and have small area (see Fig. C.12). These possess a uniform structure (i.e., well-aligned crystal grains).

Hard magnetic materials such as alnico (iron alloyed with aluminium, nickel and cobalt) are used for permanent magnets and magnetic recording tapes. These possess great resistance to demagnetization. Their hysteresis loops are generally broad and have large area (see Fig. C.12).

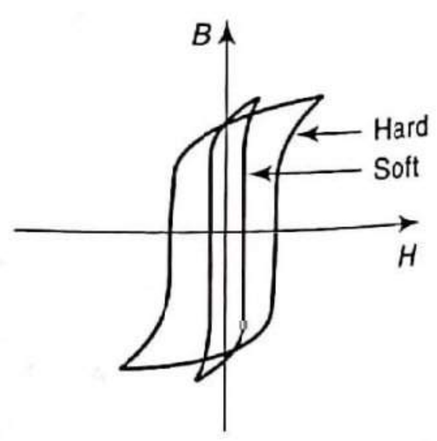

Fig. C.12 Hysteresis loops of soft and hard magnetic materials

C.4.2 Hysteresis Loss

In every magnetizing cycle, the magnetizing field (H) is reversed during half a cycle, and magnetic flux density (B) lags behind H (as already shown in the hysteresis loop). During the complete cycle, the elementary magnets within the magnetic material try to line up, first one way, and then in reverse way during the second half cycle (see Fig. C.13). This tendency to turn around of elementary magnets gives rise to mechanical stresses in the magnetic material, which in turn produces heat, a waste form of energy. The dissipated heat energy during the cycle of magnetization is given by the area within the hysteresis loop and is called **hysteresis loss** [see Fig. C.11(b)].

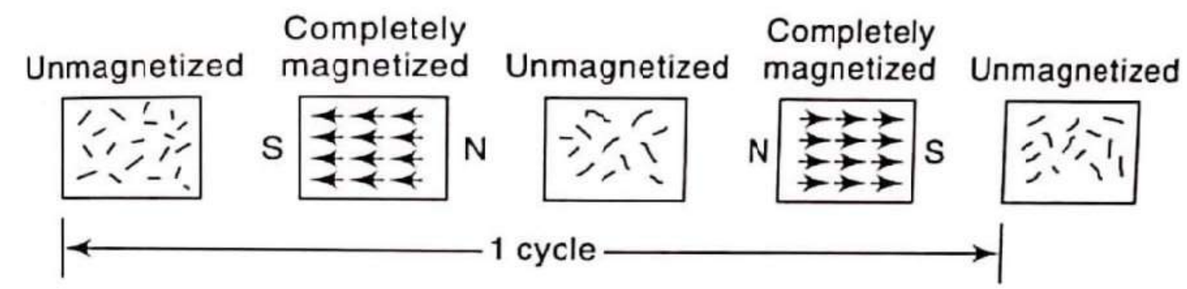

Fig. C.13 Complete cycle of magnetization

The area within a hysteresis loop indicates the hysteresis loss. To eliminate the need of finding the area of a hysteresis loop in order to compute the hysteresis loss, Steinmetz derived an empirical law for finding the hysteresis loss. He found that area of hysteresis loop of a magnetic material is directly proportional to 1.6th power of the maximum flux density established, i.e.,

$$\text{area of hysteresis loop} \propto B_{max}^{1.6}$$

or

$$\text{hysteresis energy loss} \propto B_{max}^{1.6} \text{ joule/m}^3\text{/cycle}$$

or

$$\text{hysteresis energy loss} = \eta B_{max}^{1.6} \text{ joule/m}^3\text{/cycle}$$

where η is a constant called hysteresis coefficient. Its value depends upon the nature of materials. The smaller the value of η of a magnetic material, the lesser is the hysteresis loss. The armatures of electrical machines and transformer cores are made of magnetic materials having low hysteresis coefficients in order to reduce the hysteresis loss.

If V is the volume of a magnetic material in m^3 and f is the frequency of its magnetization, then the hysteresis power loss is given by

$$W_h = \eta f B_{max}^{1.6} V \text{ joule/sec or watt}$$

C.5 Electromagnetic Induction

We know the relationship between magnetism and electricity. As per this relationship, a conductor carrying a current I is surrounded all along its length by a magnetic field, the lines of magnetic flux being concentric circles in planes at right angles to the conductor. This phenomenon of a magnetic field being associated with a current-carrying conductor leads to the question whether the converse of the above is possible, i.e., can a magnetic field generate a current.

Michael Faraday, on 29 August 1831, succeeded in generating an electric current with the aid of magnetic flux.

From his experiments, Faraday concluded that a current was generated in a coil so long as the lines of force bearing through the conductor changed. The current thus generated is called the induced current and the emf that gives rise to this induced current is called the induced emf. This phenomenon of generating an induced current in a closed circuit by changing the magnetic field through it, is called **electromagnetic induction**. The operation of electrical equipment such as motors, generators, transformers, etc. is mainly based upon the laws formulated by Faraday.

In the following sub-sections, first the laws governing electromagnetic induction and the direction of induced emf are discussed. Then, expressions for dynamically and statically induced emf are derived. Concepts of self-inductance and mutual inductance are explained. Further, the rise and decay of current in an inductive circuit and energy stored in an inductor is discussed.

C.5.1 Faraday's Laws of Electromagnetic Induction

Faraday conducted the following experiment to obtain an electric current with the aid of magnetic flux.

Faraday connected a solenoid (i.e., coil of conducting material, wound on a hollow cylinder of cardboard) to a galvanometer as shown in Fig. C.14. When a magnet was kept inside the solenoid, nothing happened as shown in Fig. C.14(a). But when the north pole of the magnet was inserted in the solenoid as shown in Fig. C.14(b), the galvanometer pointer was deflected momentarily on one side, and the direction of current was found to be anticlockwise. When the magnet was withdrawn as shown in Fig. C.14(c), the pointer of the galvanometer deflected on the other side, and the direction of current was found to be clockwise. Similar results were obtained when the south pole of the magnet was inserted or withdrawn, but the direction of current in this case was reverse of that obtained with the north pole.

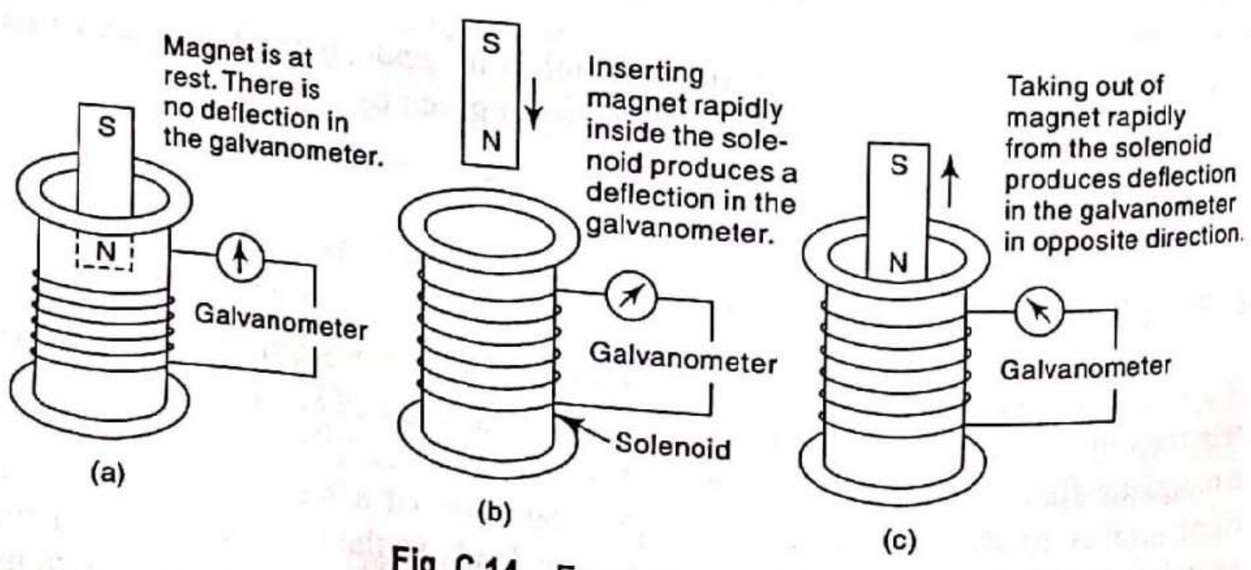

Fig. C.14 Faraday's experiment

Faraday summed up the results of the experiments described above in the form of the following two laws, known as Faraday's laws of electromagnetic induction.

Faraday's first law states that whenever the magnetic flux associated or linked with a closed circuit is changed, or alternatively, when a conductor cuts or is cut by the magnetic flux, an emf is induced in the circuit resulting in an induced current. This emf is induced so long as the magnetic flux changes.

Faraday's second law states that the magnitude of the induced emf generated in a coil is directly proportional to the rate of change of the magnetic flux.

These two basic laws discovered by Faraday changed the course of electrical engineering and led to the development of generators, transformers, etc.

The change of flux as discussed in Faraday's law can be produced in the following two ways:

(i) By motion of the conductor or the coil in magnetic field, i.e., the magnetic field is stationary and the moving conductors cut across it. The emf generated in this way is normally called **dynamically induced emf**.

(ii) By changing the current (either increasing or decreasing) in a circuit, thereby changing the flux linked with the stationary conductors, i.e., the conductors or coils remain stationary and the flux linking these conductors is changed. The emf in this case is termed **statically induced emf**, which can be further divided into self-induced emf and mutually induced emf.

The concept of dynamically induced emf gave rise to the development of generators, whereas that of statically induced emf was helpful in developing transformers.

C.5.2 Direction of Induced EMF

Faraday's laws provide no data regarding the direction of induced emf. It can be determined by two methods, namely Fleming's right hand rule and Lenz's law. In case of dynamically induced emf, Fleming's right hand rule is used to obtain the direction of induced emf, whereas Lenz's law is normally used to fix the direction of statically induced emf.

Fleming's right hand rule

Stretch the forefinger, the middle finger and the thumb of the right hand in three mutually perpendicular directions as shown in Fig. C.15. If the forefinger points

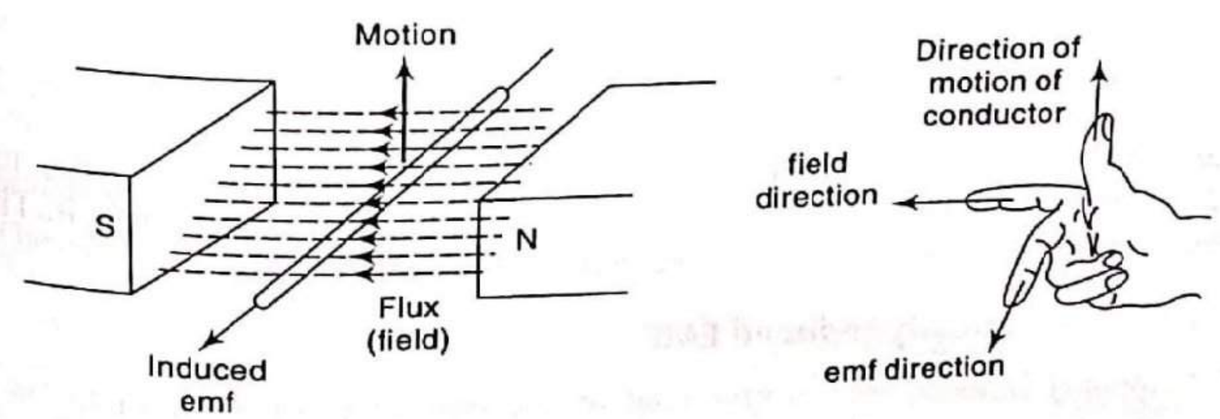

Fig. C.15 Fleming's right hand rule

in the direction of the magnetic flux, the thumb points in the direction of motion of the conductor relative to the magnetic field, then the middle finger represents the direction of the induced emf.

Lenz's law

The direction of statically induced emf can be obtained with the help of Lenz's law, which states that 'the direction of the induced emf is always such that it tends to set up a current so as to oppose the cause that produces it.'

Lenz's law is further clarified by using it with reference to Fig. C.14. When the north pole of the magnet is inserted in the coil, an emf is induced in it due to the motion of the magnet, thereby generating induced current. According to Lenz's law, the direction of this induced current generated in the coil should be such that the motion of the magnet is opposed, which is possible only when the upper end of the coil behaves as a north pole. For this to happen, the current generated in the coil should be in the anticlockwise direction as was observed by Faraday. In a similar way, the direction of the induced emf can be determined for any case utilizing Lenz's law.

C.5.3 Magnitude of Induced EMF

Let a coil consists of N number of turns over it. Assume that the flux through the coil changes from its initial value Φ_a to Φ_b in an interval of t second. So, we have

Initial value of flux linkages $= N\Phi_a$

Value of flux linkages after t second $= N\Phi_b$

So, Change of flux linkages in t second $= N\Phi_a - N\Phi_b$

The term *flux linkages* used here simply means the product of the flux in weber and the number of turns with which the flux is linked. Now, as per Faraday's law of electromagnetic induction, the induced emf in the above coil due to a change of flux is given by

$$\text{induced emf} = \frac{N(\Phi_a - \Phi_b)}{t} \text{ V}$$

Based on the above discussion, the instantaneous value of the emf induced in the coil can be represented as

$$e = -\frac{d}{dt}(N\Phi)$$

or

$$e = -N\frac{d\Phi}{dt} \qquad \text{(C.2)}$$

The negative sign in Eq. (C.2) is according to Lenz's law, which states that the induced emf generates a current so as to oppose the cause that produces it. The relation expressed by Eq. (C.2) can be called Faraday's law.

C.5.4 Dynamically Induced EMF

Dynamically induced emf is produced by the movement of a conductor in a

magnetic field. Figure C.16(a) shows a uniform magnetic field of flux density B tesla, in which the conductor is moving in the direction shown in the figure and cuts the flux through a right angle.

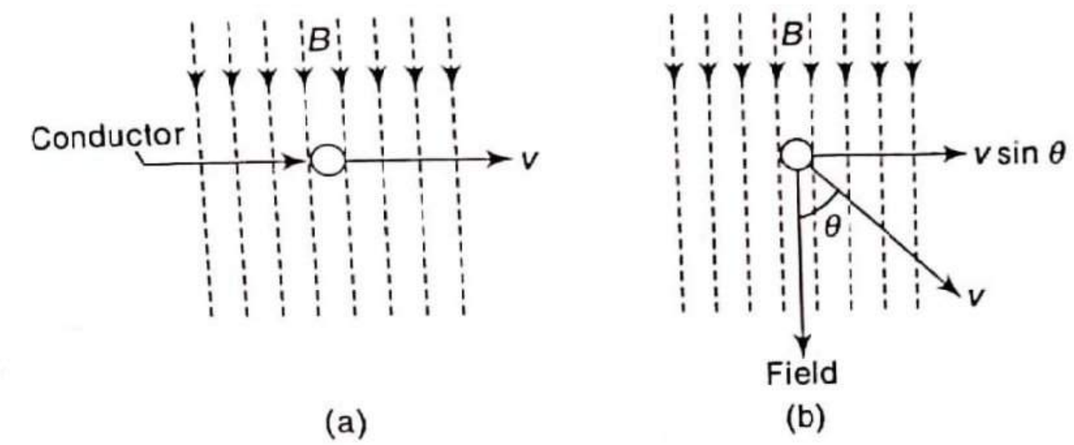

Fig. C.16 A conductor moving in a uniform magnetic field

Let l = length of the conductor in metre cutting the field

v = velocity of motion of the conductor

dx = distance moved by the conductor in time dt

Then the area swept by the moving conductor $= l \times dx$

Hence, change in flux, when the conductor moves a distance dx in time dt,

$$d\Phi = B \times l \times dx$$

The dynamically induced emf is the rate of change of flux linkages, i.e.,

$$\text{Dynamically induced emf} = \frac{Bldx}{dt} = Bl\frac{dx}{dt}$$

$$\left[\text{as } \frac{dx}{dt} = v \text{ (velocity)}\right]$$

Thus, dynamically induced emf $= Blv$ volt (C.3)

Now, if the conductor is moved at an angle θ with the direction of flux at a velocity v m/s as shown in Fig. C.16 (b), then the component of velocity perpendicular to the magnetic field is $v \sin \theta$, i.e.,

Dynamically induced emf $= Blv \sin \theta$ volt (C.4)

C.5.5 Statically Induced EMF

When the conductor is stationary and the field is moving or changing, the emf induced in the conductor is called statically induced emf. A statically induced emf can be further divided into self-induced emf and mutually induced emf.

Self-induced emf

The emf induced in a coil due to the change of its own flux linked with it, is called the **self-induced emf.**

When a coil is carrying current (see Fig. C.17), a magnetic field is established through the coil. If current in the coil changes, then the flux linked to the coil also changes. Hence, by Faraday's law, an emf will be induced in the coil, which is

known as self-induced emf. The direction of this induced emf (by Lenz's law) is always such that it opposes the cause responsible for inducing the emf, namely the change of current (and hence the field) in the coil. It follows that when current in a coil changes, an emf is induced (self-induced emf) in it, the direction of which is such that it opposes the change of current in the coil.

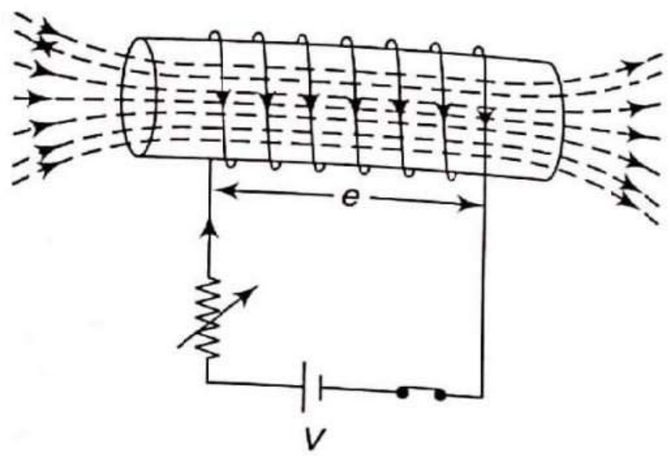

Fig. C.17 Self-induced emf

The following points may be noted regarding the self-induced emf:

(i) When the current in a coil changes, the self-induced emf opposes the change. This property of the coil that opposes any change in the amount of current through it, is called its **self-inductance** or **inductance**.

(ii) Self-induced emf (and hence, inductance) comes into picture only when the current in the coil changes (decreases or increases). When the current in the coil is steady or constant, magnetic field also becomes constant and the self-induced emf drops to zero.

(iii) The magnitude of self-induced emf is given by Faraday's laws as $e = N\,d\Phi/dt$, where N is the number of turns of the coil and $d\Phi/dt$ is the rate of change of the flux linking the coil.

(iv) Self-induced emf (and hence inductance) does not prevent the current from changing; it serves only to delay the change. Thus, after the switch is closed (see Fig. C.17), the current will rise from zero ampere to its final steady value in some time (a fraction of a second). This delay is due to the self-induced emf or inductance of the coil.

Self-inductance (L) As discussed above, the property of a coil that opposes any change in the amount of current flowing through it is called its self-inductance or inductance. If the current in the coil is increasing, the self-induced emf is set up in such a direction so as to oppose the rise of the current, i.e., direction of the self-induced emf is opposite to that of the applied voltage. Similarly, if the current in the coil is decreasing, the self-induced voltage will be in the direction of the applied voltage.

Consider a coil of N turns carrying a current of I ampere. If current in the coil changes, the flux linkages of the coil will also change. This will set up a self-induced emf e in the coil given by

$$e = N\frac{d\Phi}{dt} = \frac{d}{dt}(N\Phi) \qquad \text{(C.5)}$$

Since the flux is due to the current in the coil, it follows that flux linkages ($N\Phi$) will be proportional to I. So, Eq. (C.5) gives

$$e \propto \frac{dI}{dt}$$

or $$e = \text{constant} \times \frac{dI}{dt}$$

or $$e = L\frac{dI}{dt}$$

where L is a constant called self-inductance or inductance of the coil. The unit of inductance is henry (H). In the above expression, if $e = 1$ V, $dI/dt = 1$ A/sec, then $L = 1$ H.

Hence, a coil has an inductance of 1 H if an emf of 1 V is induced in it when the current through it changes at the rate of 1 A/sec.

Mutually induced emf

Consider two coils A and B placed adjacent to each other as shown in Fig. C.18. A part of the magnetic flux produced by coil A passes through or links with coil B. This flux, which is common to both the coils, is called **mutual flux** (Φ_m). If the current in coil A is varied, the mutual flux also varies and hence, emf is induced in both the coils. The emf induced in coil A is called self-induced emf as already discussed. The emf induced in coil B is known as mutually induced emf.

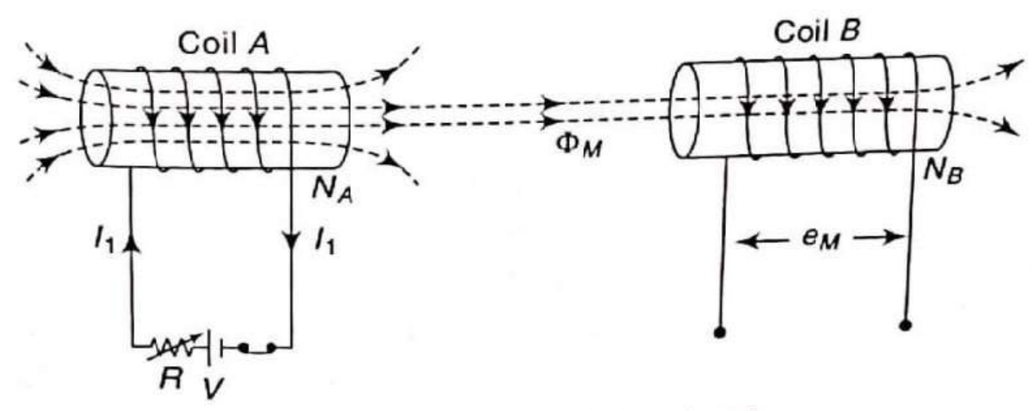

Fig. C.18 Mutually induced emf

Thus, the emf induced in a coil due to the changing current in the neighbouring coil is called mutually induced emf. The magnitude of mutually induced emf is given by Faraday's law as follows:

Mutually induced emf, $e_M = N_B\dfrac{d\Phi_M}{dt}$

where N_B = number of turns of coil B

$\dfrac{d\Phi_M}{dt}$ = rate of change of the mutual flux (common flux)

The direction of mutually induced emf (by Lenz's law) is always such that it opposes the very cause producing it. The cause producing the mutually induced emf in coil B is the changing mutual flux produced by coil A. Hence, the direction of the induced current (when the circuit is completed) in coil B will be such that the flux set up by it will oppose the changing mutual flux produced by coil A.

The following points may be noted regarding the mutually induced emf:

(i) The mutually induced emf in coil B persists so long as the current in coil A is changing. If current in coil A becomes steady, the mutual flux also becomes steady and mutually induced emf drops to zero.

(ii) The property of two neighbouring coils to induce voltage in one coil due to the change of current in other is called **mutual inductance.**

Mutual inductance (M) In Fig. C.18, the larger the rate of change of the current in coil A, the greater is the emf induced in coil B. In other wards, mutually induced emf in coil B is directly proportional to the rate of change of the current in coil A, i.e.,

Mutually induced emf in coil $B \propto$ Rate of change of current in coil A

or $$e_M \propto \frac{dI_1}{dt}$$

or $$e_M = M\frac{dI_1}{dt}$$

where M is a constant called mutual inductance between the two coils. The unit of mutual inductance is henry (H). In the above expression, if $e_M = 1$ V, $dI_1/dt = 1$ A/sec, then $M = 1$ H.

Hence, mutual inductance between two coils is 1 H if current changing at the rate of 1 A/sec in one coil induces an emf of 1 V in the other coil.

Mutual inductance comes into picture when the two coils are placed close together in such a way that the flux produced by one links the other, i.e., two coils are coupled. Each coil has its own inductance as well as mutual inductance.

The fraction of magnetic flux produced by the current in one coil that links the other coil is called coefficient of coupling (k). The coefficient of coupling has a maximum value of 1 (or 100%) when the entire flux of one coil links the other. If half the flux set up in one coil links the other, then the coefficient of coupling (k) is 0.5 or 50%.The coefficient of coupling is very important in coupled circuits because mutual inductance depends upon it. The greater the coefficient of coupling between the two coils, the greater is the mutual inductance between them and vice versa.

C.5.6 Rise of Current in an Inductive Circuit

Consider a simple circuit consisting of a resistor R and an inductance L connected to a dc voltage of V volt through a switch S as shown in Fig. C.19(a). No current will flow in this circuit till the switch S is open. When the switch S is closed, the current in the circuit does not rise immediately to its final steady value. The final steady value of the current in the circuit will be V/R ampere. The reason the current does not build up instantly to its final value is that as the current increases, the self-induced emf in inductance opposes the change in the current (Lenz's law).

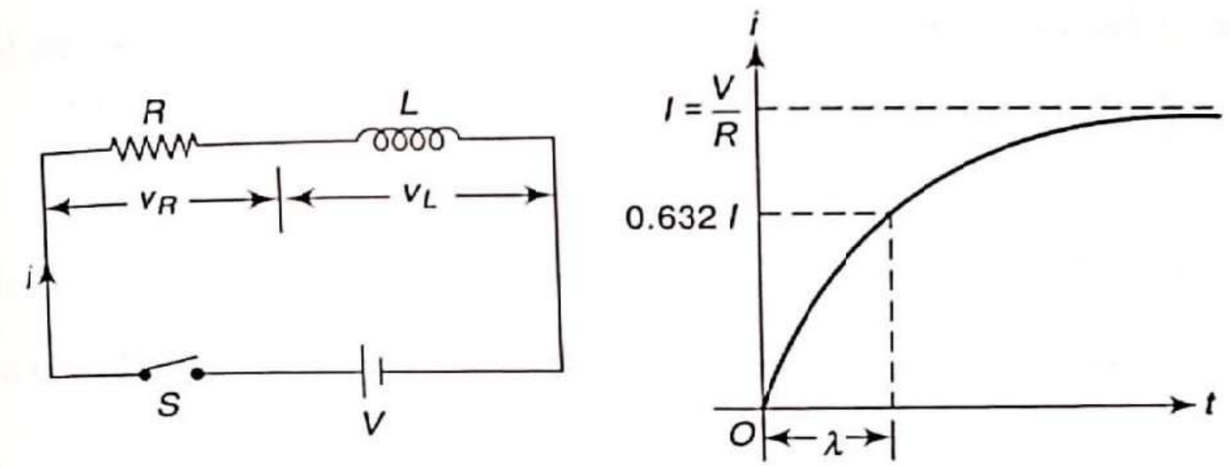

(a) Inductive circuit (b) Current–time curve

Fig. C.19 Rise of current in a circuit with inductance

Suppose at the instant of closing the switch S, the current is i and is increasing at the rate of di/dt. The applied voltage must balance (i) the voltage drop $v_R(= iR)$ across the resistor and (ii) the self-induced emf $v_L(= Ldi/dt)$ in the inductance.

So, $$V = v_R + v_L$$

$$= iR + L\frac{di}{dt}$$

As the current increases, $v_R(= iR)$ increases and $v_L(= Ldi/dt)$ decreases since V is constant. The decrease in $v_L(= Ldi/dt)$ means that di/dt decreases because L is constant. The result is that after some time, di/dt becomes zero and so does the self-induced emf $v_L(= Ldi/dt)$. At this stage, the current attains the final fixed value I given by

$$V = IR + 0$$

or $$I = \frac{V}{R}$$

Thus, when a dc circuit containing inductance is switched on, the current takes some time to reach the final value $I(= V/R)$. The expression of variation of the circuit current (i) with time t can be calculated as

$$V = v_R + v_L$$

or $$V = iR + L\frac{di}{dt}$$

or $$V - iR = L\frac{di}{dt}$$

or $$\frac{di}{V - iR} = \frac{dt}{L}$$

Multiplying both sides by $-R$, we get

$$\frac{-Rdi}{V - iR} = \frac{-R}{L}dt$$

Integrating both sides, we get

$$\int \frac{-Rdi}{V - iR} = \int \frac{-R}{L} dt$$

or $$\log_e (V - iR) = -\frac{R}{L} t + K \tag{C.6}$$

where K is a constant whose value can be determined from the initial conditions.

At the instant of closing the switch S, $t = 0$ and $i = 0$.

Substituting these values in Eq. (C.6), we get

$$\log_e V = K$$

Putting the value of K in Eq. (C.6), we get

$$\log_e (V - iR) = -\frac{R}{L} t + \log_e V$$

or $$\log_e \frac{V - iR}{V} = -\frac{R}{L} t$$

or $$\frac{V - iR}{V} = e^{-Rt/L}$$

or $$V - iR = Ve^{-Rt/L}$$

or $$i = \frac{V}{R}(1 - e^{-Rt/L})$$

But $V/R = I$, the final value of the current attained by the circuit.

So, $$i = I(1 - e^{-Rt/L}) \tag{C.7}$$

In Eq. (C.7), t is in second and its value is zero at the instant the switch is closed. Eq. (C.7) gives the value of current in the circuit w.r.t. time (t) and is represented graphically in Fig. C.19(b). Note that the rise of current follows an exponential law.

Equation (C.7) reveals that as t increases, the term $e^{-Rt/L}$ gets smaller and the current i in the circuit gets larger. Inspection of the current–time curve [see Fig. C.19(b)] reveals that at first, the curve is steep and as the time passes, it becomes less and less steep. This is because initially, the rate of rise of current is more but as the current increases, the rate at which the current increases is reduced.

Time constant

The quantity L/R in Eq. (C.7) above has the dimensions of time so that the exponent of e (i.e., Rt/L) is a whole number. The quantity L/R is called the **time constant** of the circuit and affects the rise of current in the circuit. It is represented by λ.

So, time constant, $\lambda = L/R$ sec

We know that the expression for the circuit current variation with time (t) is given by

$$i = I(1 - e^{-Rt/L})$$

Now, if we take the time interval $t = \lambda (= L/R)$, then

$$i = I(1 - e^{-1})$$
$$= 0.632\, I$$

Hence, the time constant can be defined as the time required for the circuit current to reach 0.632 of its final steady value.

C.5.7 Decay of Current in an Inductive Circuit

Consider an inductive circuit as shown in Fig. C.20(a). When the switch S is thrown to position 2, the current in the circuit starts rising and attains the final value $I (= V/R)$ after some time as explained previously. If now, the switch is thrown to position 1, it is found that the current in the RL circuit does not cease immediately but gradually reduces to zero.

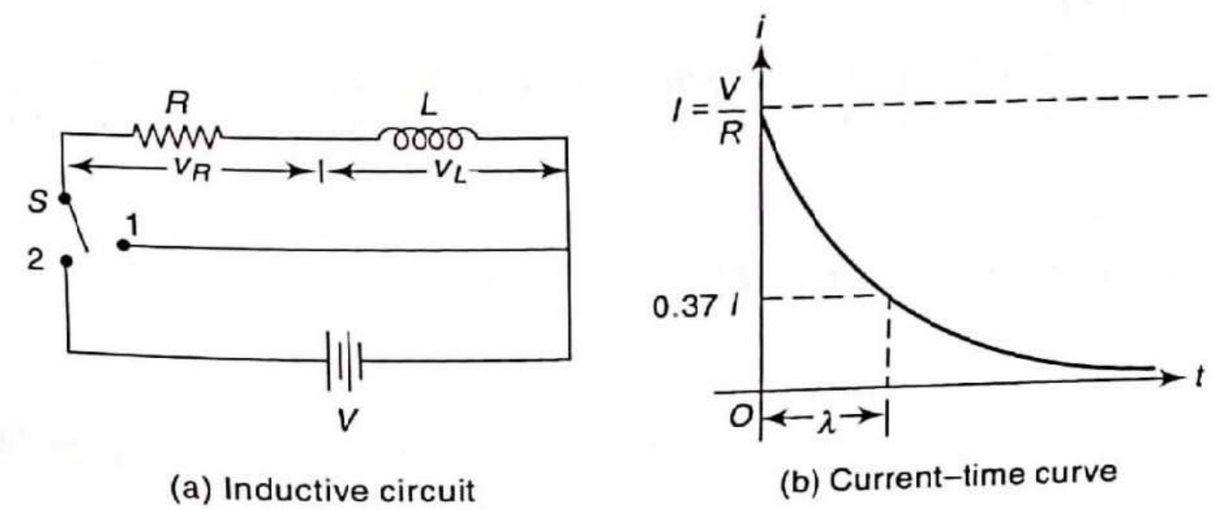

Fig. C.20 Decay of current in an inductive circuit

Suppose at any instant, the current is i and is decreasing at the rate of di/dt. Then

$$0 = v_R + v_L$$

$$0 = iR + L\frac{di}{dt}$$

or $$\frac{di}{i} = -\frac{R}{L} dt$$

Integrating both sides, we get

$$\log_e i = -\frac{R}{L} t + K \tag{C.8}$$

where K is a constant whose value can be determined from the initial conditions.

When $t = 0$, $i = I (= V/R)$.

Substituting these values in Eq. (C.8), we get

$$\log_e I = 0 + K$$

or $$K = \log_e I$$

Putting the value of K in Eq. (C.8), we get

$$\log_e i = -\frac{R}{L}t + \log_e I$$

or $$\log_e \frac{i}{I} = -\frac{R}{L}t$$

or $$\frac{i}{I} = e^{-Rt/L}$$

or $$i = Ie^{-Rt/L} \qquad \text{(C.9)}$$

Equation (C.9) gives the decay of current in an RL series circuit with time t and is represented graphically in Fig. C.20(b). Note that decay of current follows the exponential law.

Time constant

The quantity L/R in Eq. (C.9) is called the **time constant** of the circuit. We know that the expression for the circuit current variation with time (t) is given by

$$i = Ie^{-Rt/L}$$

Now, if we take the time interval $t = \lambda(= L/R)$, then

$$i = Ie^{-1}$$

$$= 0.37\, I$$

Hence, the time constant can be defined as the time taken by the current to fall to 0.37 of its initial steady value.

C.5.8 Energy Stored in an Inductor

Consider a simple circuit consisting of an inductor connected to a dc voltage of V volts through a switch S as shown in Fig. C.21. The inductor has a resistor of R ohm and an inductance of L henry. When the switch is closed, current increases slowly due to inductance L and reaches the final steady value $I(= V/R)$ after some time. During the period of change, while the current is increasing, an emf is induced in L due to the change in flux linkages. This emf opposes the change in the current (Lenz's law). Therefore, to overcome the self-induced emf and to establish a magnetic field around a inductor, energy must be supplied. This supplied energy is stored in the magnetic field. As the current increases, the stored energy also increases. When the current attains the steady value $I(V/R)$, the self-induced emf drops to zero and no further energy is required to maintain the flux produced. At this stage, the stored magnetic energy is steady at the value of corresponding to I. When the switch is opened, the magnetic field collapses and the stored energy is returned to the circuit.

Suppose at any instant, the current in the inductor is i and is increasing at the rate of di/dt. Then the induced emf e across L is given by

$$e = L\frac{di}{dt}$$

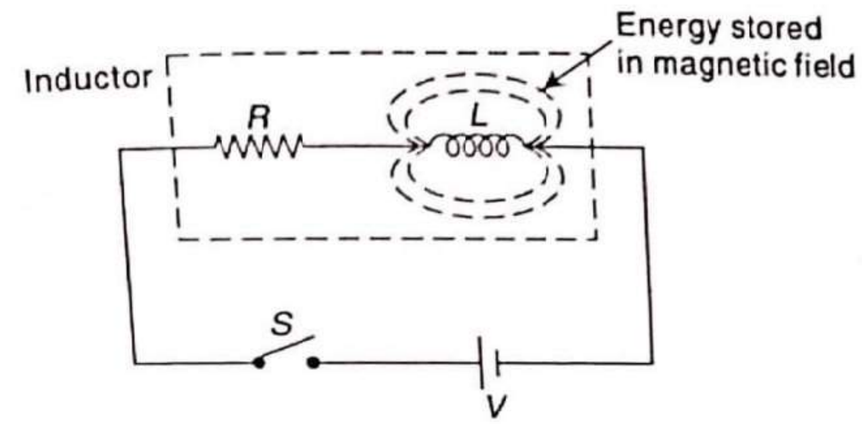

Fig. C.21 A circuit containing inductor

The applied voltage must balance the voltage drop across resistor R and neutralize the above induced emf. Thus,

$$V = iR + L\frac{di}{dt}$$

Multiplying throughout by idt,

$$V\, i\, dt = i^2 R\, dt + L\, i\, di$$

Now, $V\, i\, dt$ = Energy supplied by the source in time dt

$i^2 R\, dt$ = Energy dissipated in the form of heat

$L\, i\, di$ = Energy absorbed by the inductance of the coil in building up the magnetic field

Thus, the energy absorbed by the magnetic field during the time dt second

$= L\, i\, di$ joule

Hence, the total energy absorbed in the magnetic field when the current increases from zero to I ampere

$$= \int_0^I Li\, di$$

$$= L\int_0^I i\, di$$

So, energy stored $= \frac{1}{2}LI^2$ joule

C.5.9 Eddy Current Loss

When a magnetic material is linked with a variable or alternating flux, an emf is induced in the magnetic material itself according to Faraday's laws of electromagnetic induction. This induced emf circulates a current in the body of the magnetic material. These circulating currents are called **eddy currents** and the power loss due to the flow of this current is called **eddy current loss.** An eddy current always tends to flow in planes perpendicular to the magnetic field as it is induced due to the variation of this flux through the circuit.

Heat is generated due to the flow of eddy currents. Basically, eddy current loss depends upon the value of the emf induced and the resistance offered by the magnetic material to the flow of eddy currents. The resistance can be greatly increased by laminating the material, thereby reducing the magnitude of the eddy currents to an appreciable value. The eddy current loss depends upon the following factors:

(i) Thickness of the material, t
(ii) Frequency of the flux reversal, f
(iii) Maximum value of the flux density, B_{max}
(iv) Volume of the material, v
(v) Quality of the material

The eddy current loss (W_e) occurring in a magnetic material is given by

$$W_e = k B_{max}^2 f^2 t^2 v$$

where k is the eddy current coefficient and its value depends upon the type of the magnetic material.

Appendix D

Additional Examples

1. Using source transformation find I in the circuit shown in Fig. D.1.

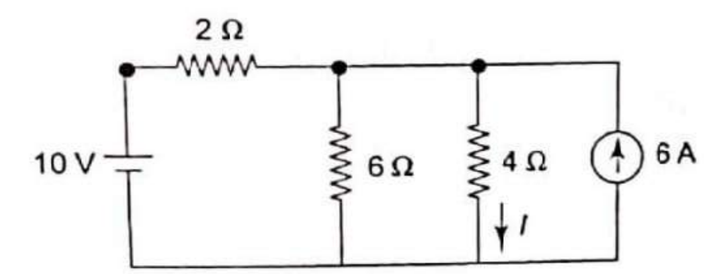

Fig. D.1

Converting series combination of voltage source of 10 V and resistor of 2 Ω into equivalent combination, we get the circuit as follows:

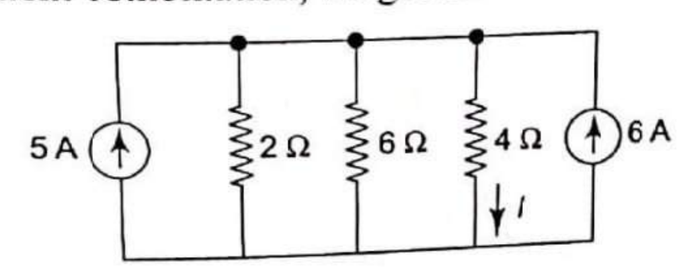

Fig. D.2

In Fig. D.2, resistor 2 Ω and 6 Ω are in parallel. So, 2 Ω || 6 Ω = 1.5 Ω.

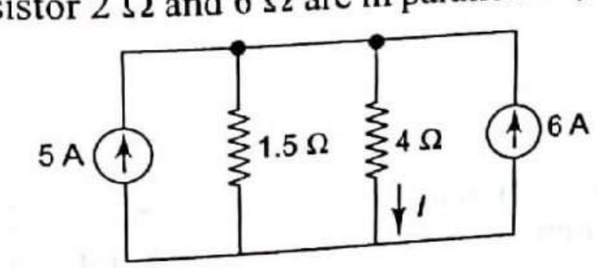

Fig. D.3

By adding the parallel current sources, we get the circuit as shown in Fig. D.4.

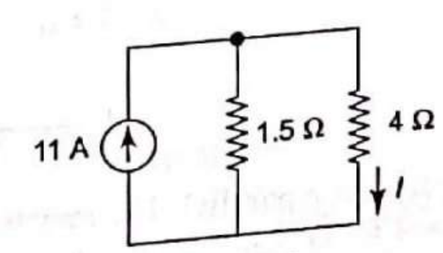

Fig. D.4

By current division rule, we have

$$I = \frac{11 \times 1.5}{1.5 + 4}$$

$$I = 3\,\text{A}\,(\downarrow)$$

2. Using source conversion, reduce the circuit shown in Fig. D.5 into single current source in parallel with single resistance.

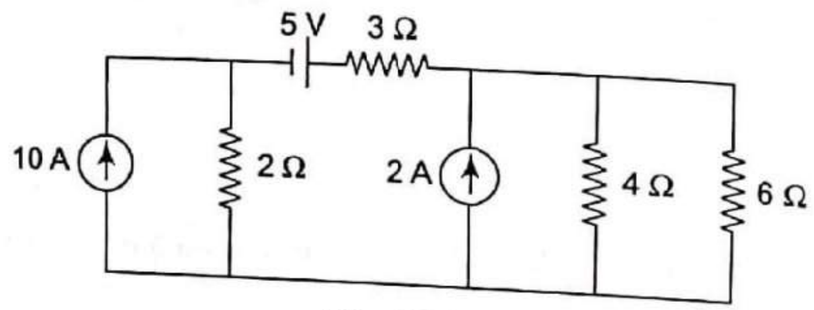

Fig. D.5

Converting parallel combination of current source of 10 A and resistor of 2 Ω into equivalent series combination of voltage source and resistor, we get the following circuit.

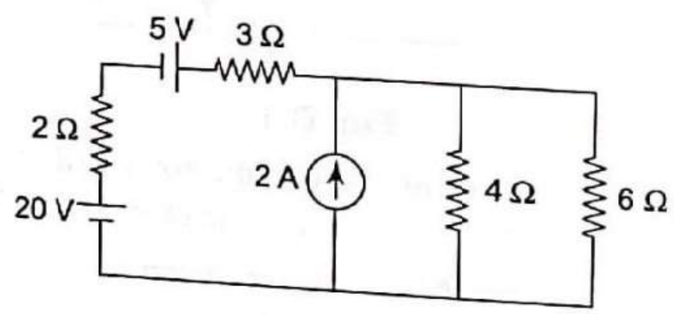

Fig. D.6

By adding the series voltage sources and series resistors, we get

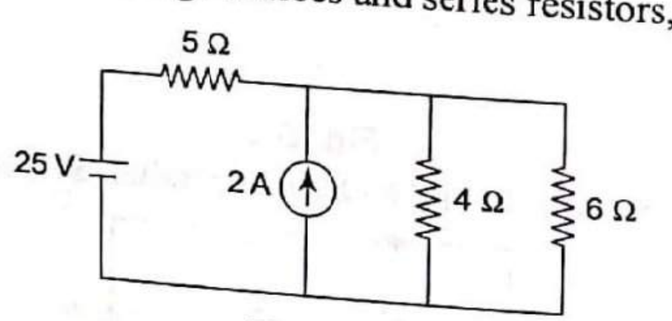

Fig. D.7

Converting series combination of voltage source of 25 V and resistor of 5 Ω into equivalent combination of current source and resistor, we get

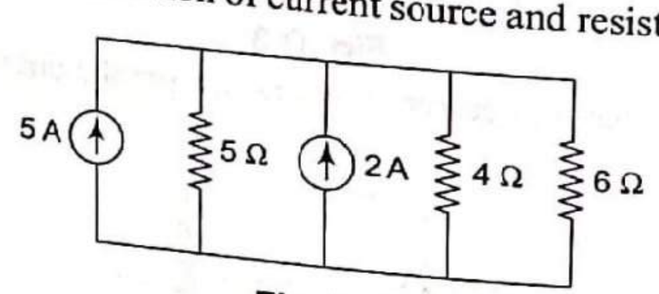

Fig. D.8

In Fig. D.8, all elements are in parallel. The resistors 5 Ω, 4 Ω and 6 Ω are in parallel. So 5 || 4 || 6 = 1.62 Ω. Also adding the current sources, we get

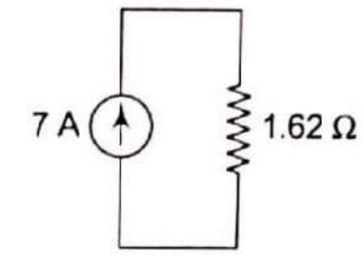

Fig. D.9

3. Find the current flowing through the 4 Ω resistor in the circuit shown in Fig. D.10.

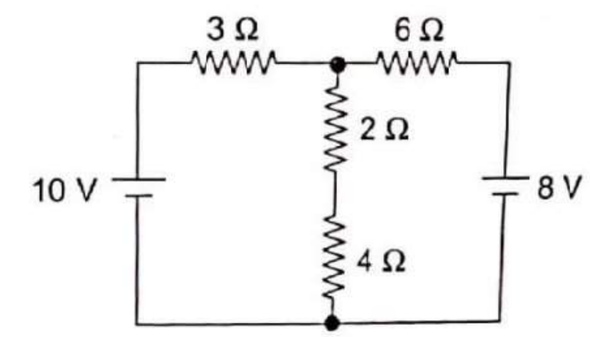

Fig. D.10

In Fig. D.10, the circuit has two nodes (every junction is regarded as node). Choosing the node at the bottom as reference node, we assign the voltage at the top node as V.

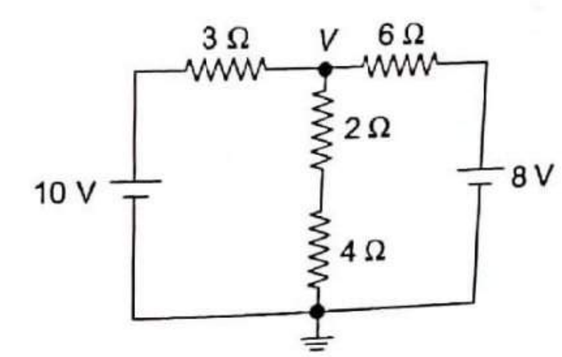

Fig. D.11

By nodal analysis, i.e., applying KCL at top node, assuming all current flowing away from the node, we get the single nodal equation as

$$\frac{V-10}{3} + \frac{V-0}{(4+2)} + \frac{V-8}{6} = 0$$

So, V= 7 volts

Current flowing through 4 Ω resistor,

$$I_{4\,\Omega} = \frac{V}{(2+4)}\,\text{A}\,(\downarrow)$$

$$\text{So,}\quad I_{4\,\Omega} = \frac{7}{(2+4)}\,\text{A}\,(\downarrow)$$

$$\text{So,}\quad I_{4\,\Omega} = 1.167\,\text{A}(\downarrow)$$

4. Calculate the current in each branch of the network shown in Fig. D.12.

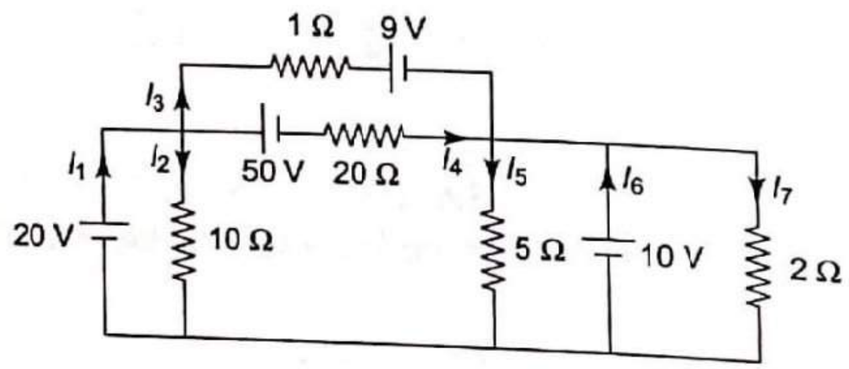

Fig. D.12

From Fig. D.12, applying Ohm's law for different parts of the circuit we get

$$I_2 = \frac{20}{10} = 2\text{ A}; I_5 = \frac{10}{5} = 2\text{ A}; I_7 = \frac{10}{2} = 5\text{ A}$$

By marking the different nodes and taking the bottom node as reference,

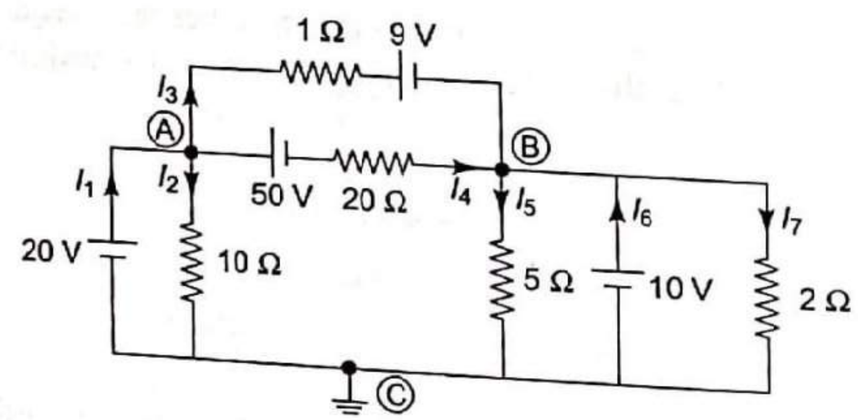

Fig. D.13

Let the voltage at node A be V_A and at node B be V_B. From circuit diagram,

$$I_3 = \frac{V_A - (V_B + 9)}{1} = \frac{20 - (10 + 9)}{1} = 1\text{ A}$$

$$I_4 = \frac{(V_A - 50) - V_B}{20} = \frac{(20 - 50) - 10}{20} = -2\text{ A}$$

Applying KCL at node A,

$$I_1 = I_2 + I_3 + I_4$$
$$I_1 = 2 + 1 + (-2)$$
$$I_1 = 1\text{ A}$$

Similarly applying KCL at node B

$$I_3 + I_4 + I_6 = I_5 + I_7$$

So, $I_6 = I_5 + I_7 - I_3 - I_4 = 2 + 5 - 1 - (-2) = 8\text{ A}$

5. Determine the voltage drop V_{xy} across the open circuit in Fig. D.14. Also state which resistors have no effect on V_{xy}.

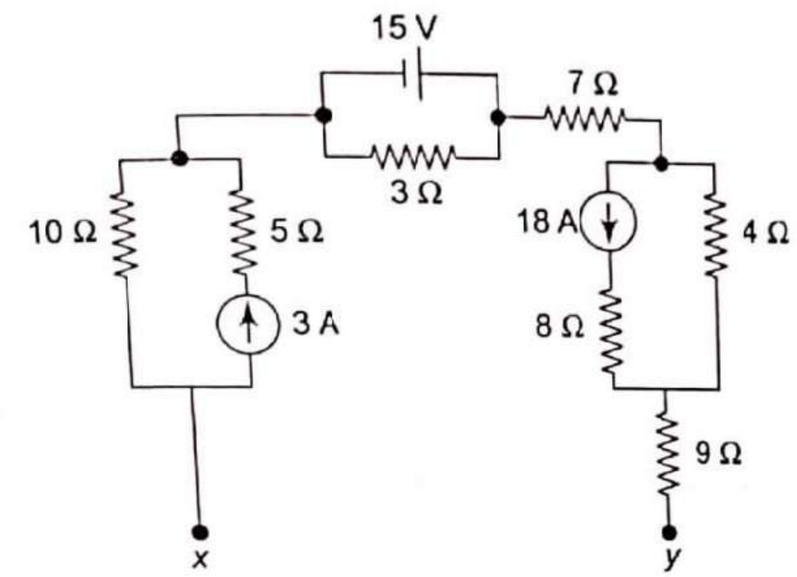

Fig. D.14

No current flows through 7 Ω resistor and 9 Ω resistor, as there is no closed path for the current to flow. The current 3 A flows in the left loop of the circuit (due to current source) and is not affected by the resistance connected in series (i.e. 5 Ω). The pd across the 10 Ω is 3 × 10 = 30 V, irrespective of the value of 5 Ω resistor. Similarly, the pd across 4 Ω resistor is 18 × 4 = 72 V irrespective of the value of 8 Ω resistance. The pd across the parallel combination of 15 V source and 3 Ω resistor remains 15 V, irrespective of the value of 3 Ω resistor. Thus 5 Ω, 8 Ω, 3 Ω, 7 Ω, and 9 Ω resistors will have no effect on the voltage drop V_{xy}.

So, $V_{xy} = -(4 \times 18) - 15 - (10 \times 3) = -117\text{ V}$

Note that we can conclude that a resistance connected in series with an ideal current source can be ignored and is redundant to the circuit. Similarly, a resistance connected in parallel with an ideal voltage source can be ignored and is redundant to the circuit.

6. By Norton's theorem, find the current flowing through 5Ω resistor in the circuit shown in Fig. D.15.

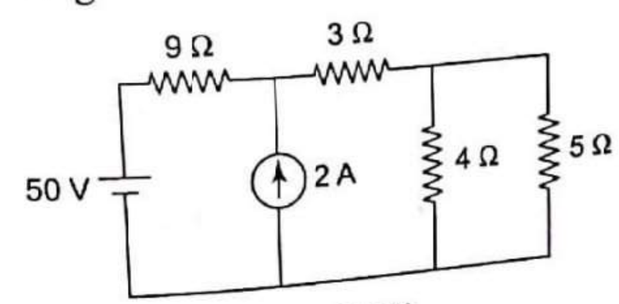

Fig. D.15

Current flowing through 5 Ω is required. This resistance can be called load resistance R_L and its terminals can be marked as load terminals A and B.

Step I: Calculation of I_N

Removing the load resistance from the network and short circuiting the load terminals, we get the network as shown in Fig. D.16.

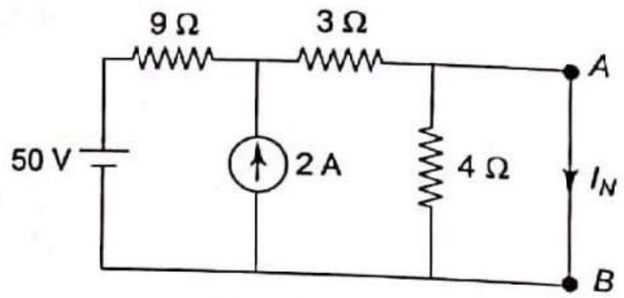

Fig. D.16

In Fig. D.16, with *AB* shorted, no current would flow in 4 Ω resistor; and hence this resistance can be removed from the circuit.

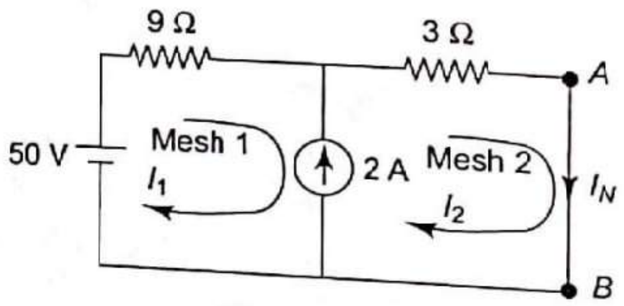

Fig. D.17

By Mesh analysis,
Mesh 1 and Mesh 2 form a supermesh.
So, $I_2 - I_1 = 2$ (i)
Applying KVL to supermesh (outer loop),
$-9I_1 - 3I_2 + 50 = 0$
$-9I_1 - 3I_2 = -50$ (ii)
From Eqs (i) and (ii), $I_2 = 5.67$ A
i.e. $I_N = 5.67$A

Step II: Calculation of R_N

Removing the load resistance from the network and replacing the voltage source by short circuits and current source by open circuit, we get the following circuit.

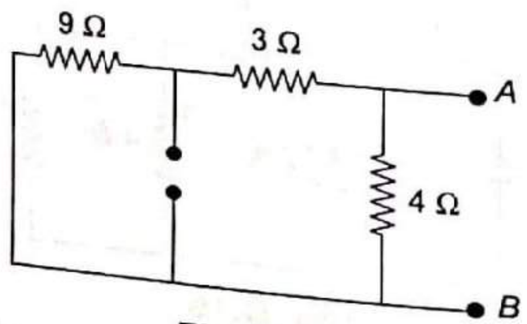

Fig. D.18

By series-parallel circuit rules, the above circuit can be reduced as:

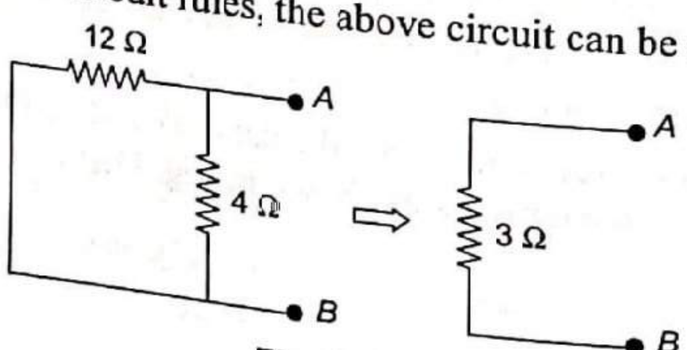

Fig. D.19

So, $R_{AB} = R_N = 3\ \Omega$

Step III: Calculation of load current

Norton's equivalent can be drawn as shown below:
By current division rule,

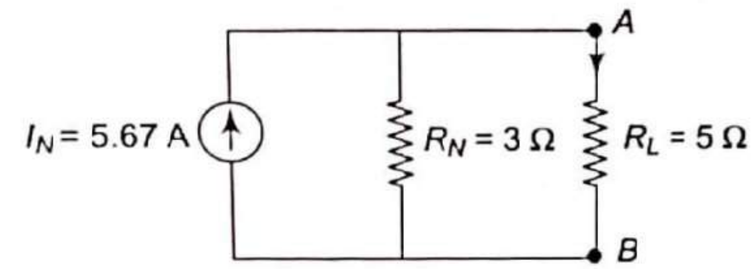

Fig. D.20

$$I_{5\Omega} = 5.67 \times \frac{3}{3+5} = 2.13\text{ A}\ (\downarrow)$$

7. Determine the current through resistance $R_L = 3\ \Omega$ in the circuit shown in Fig. D.21, by superposition theorem. Also verify the answer by Thevenin's theorem.

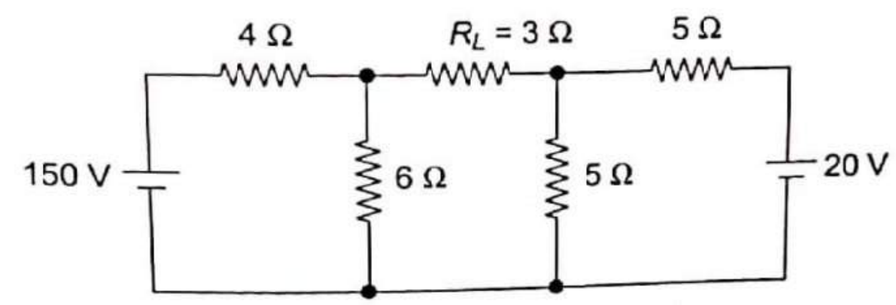

Fig. D.21

Step I: 150 V source acting alone, and replacing 20 V source by short circuit, the circuit reduces to that shown in Fig. D. 22(a). The 5 Ω and 5 Ω resistances come in parallel and the circuit reduces to that shown in Fig. D.22(b). The circuit is further simplified to that shown in Fig. D.22(c).

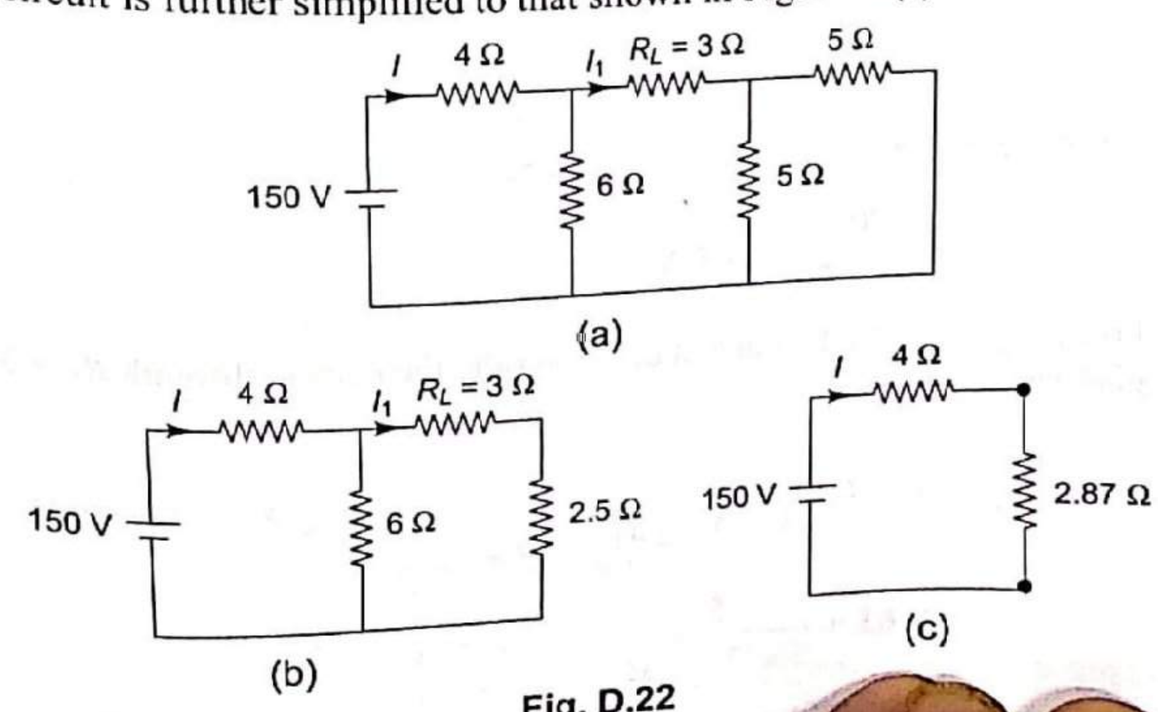

Fig. D.22

From Fig. D.22(c), the total current I is given as

$$I = \frac{150}{4+2.87} = 21.83 \text{ A}$$

From Fig. D.22(b), by current division rule, the current through $R_L = 3\ \Omega$ is given as

$$I_1 = I \times \frac{6}{6+(3+2.5)} = 21.83 \times \frac{6}{6+(3+2.5)}$$

So, $I_{R_L} = I_1 = 11.39 \text{ A} (\rightarrow)$

Step II: 20 V source acting alone, and replacing 150 V source by short circuit we get Fig. D.23(a). The 4 Ω and 6 Ω resistors come in parallel and the circuit reduces to Fig. D.23(b). By series-parallel circuit reduction technique, the circuit is further simplified to that shown in Fig. D.23(c).

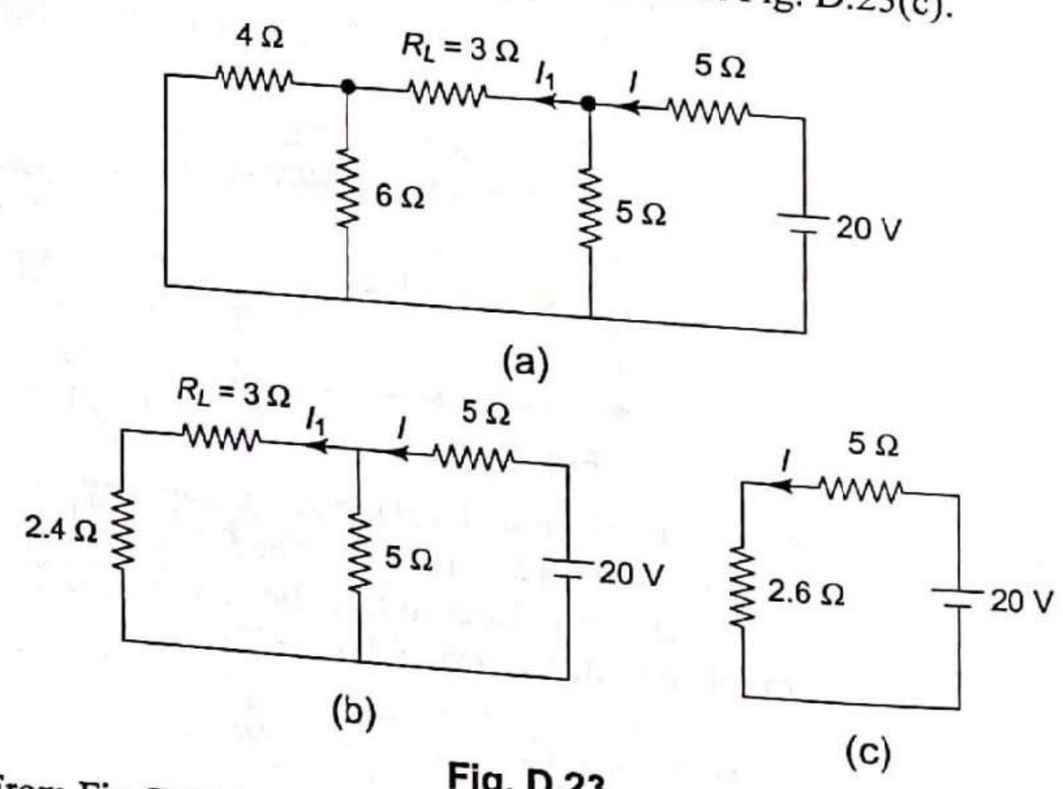

Fig. D.23

From Fig. D.23(c), the total circuit current I is given as

$$I = \frac{20}{5+2.6} = 2.63 \text{ A}$$

From Fig. D.23(b), by current division rule, the current through $R_L = 3\ \Omega$ is given as

$$I_{R_L} = I_1 = I \times \frac{5}{5+(3+2.4)}$$

$$= 2.63 \times \frac{5}{5+(3+2.4)} = 1.264 \text{ A} (\leftarrow)$$

Step III: By Superposition principle, the resultant current through R_L is given as

$$I_{R_L} = 11.39 \text{ A} (\rightarrow) + 1.264 \text{ A} (\leftarrow)$$

So, $I_{R_L} = I_{3\Omega} = 10.126 \text{ A} (\rightarrow)$

Verification by Thevenin's theorem

Current through $R_L = 3\ \Omega$ is required. By marking the load terminals as A and B we get the circuit as shown in Fig D.24(a).

Step I: Calculation of V_{TH}

Removing the load resistance we get the circuit as shown in Fig. D.24(b). Voltage appears across the load terminals A and B, called Thevenin's voltage V_{TH} is required.

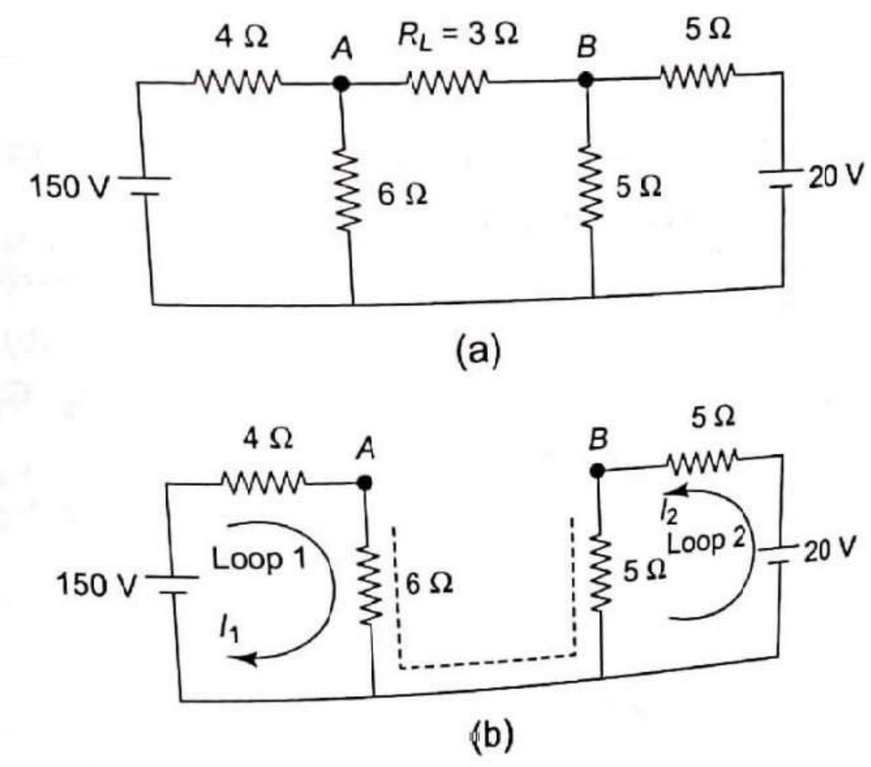

Fig. D.24

In Fig. D.24(b), for calculation of V_{TH}, i.e., V_{AB} the selected path from A to B is marked by dotted line. The two loops are electrically separated. So loop currents I_1 and I_2 can be calculated as

$$I_1 = \frac{150}{6+4} = 15 \text{ A}$$

$$I_2 = \frac{20}{5+5} = 2 \text{ A}$$

Hence, $V_{TH} = V_{AB}$

$$= -5I_2 + 6I_1 = -5(2) + 6(15) = 80 \text{ V}$$

Step II: Calculation of R_{TH}

Removing the load resistance from the network and replacing voltage sources by short circuit, we get the circuit as shown in Fig. D.25.

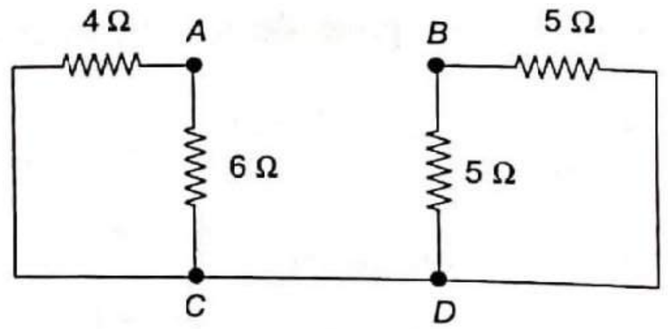

Fig. D.25

In Fig. D.25, equivalent resistance across A and B is called Thevenin's resistance R_{TH}. In Fig. D.25, 4 Ω and 6 Ω are in parallel; also 5 Ω and 5 Ω resistors come in parallel.

Thus, $R_{TH} = R_{AB} = 4.9\ \Omega$

Step III: Calculation of load current

Thevenin's equivalent circuit can be drawn as shown in Fig. D.27.

By Ohm's law,

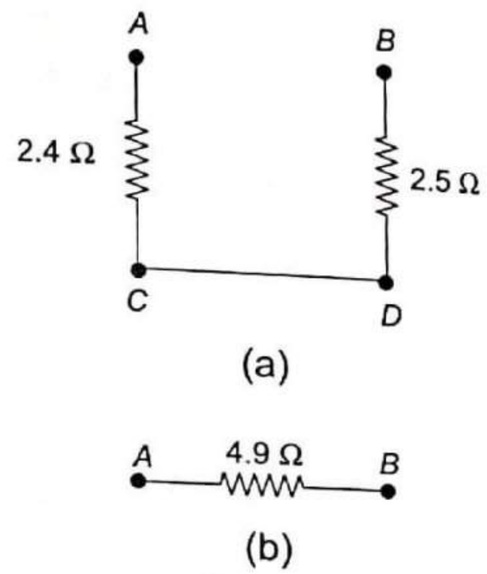

Fig. D.26

$$I_{R_L} = \frac{80}{4.9+3} = 10.126 \text{ A from } A \text{ to } B$$

i.e., $I_{R_L} = 10.126$ A (→)

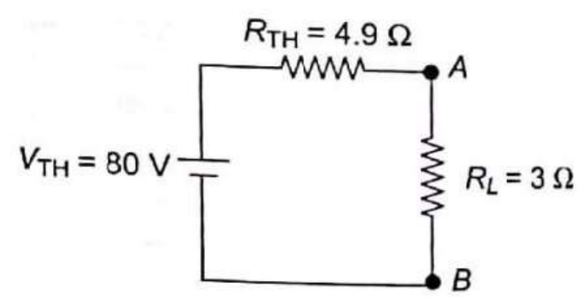

Fig. D.27

8. Use node voltage analysis and determine the power consumed by 2 Ω and 4 Ω resistors in the network of Fig. D.28.

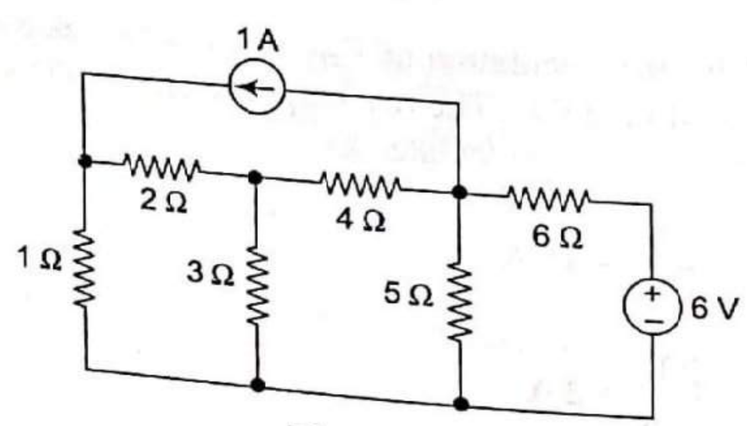

Fig. D.28

Making the different nodes and assigning the unknown currents, we obtain the following circuit.

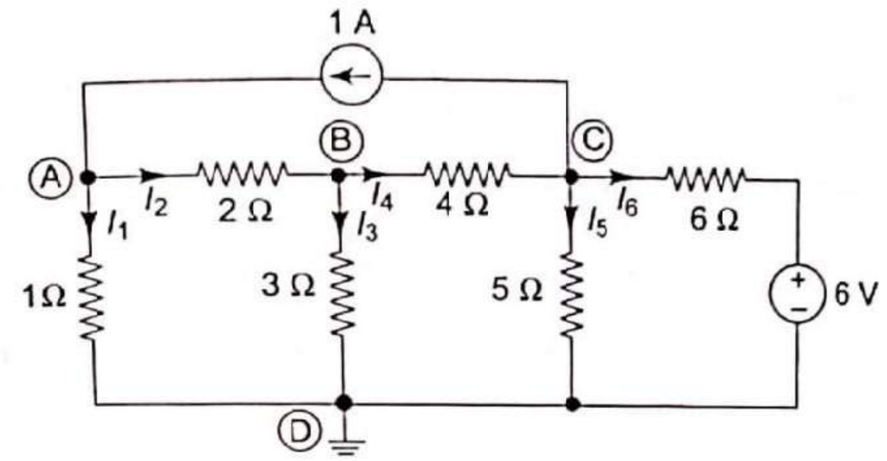

Fig. D.29

Applying KCL at node A,

$$1 = I_1 + I_2$$

or $$1 = \frac{V_A - 0}{1} + \frac{V_A - V_B}{2}$$

or $$3V_A - V_B = 2 \qquad \text{(i)}$$

Applying KCL at node B,

$$I_2 = I_3 + I_4$$

$$\frac{V_A - V_B}{2} = \frac{V_B - 0}{3} + \frac{V_B - V_C}{4}$$

$$6V_A - 13V_B + 3V_C = 0 \qquad \text{(ii)}$$

Applying KCL at node C,

$$I_4 = I_5 + I_6 + 1$$

$$\frac{V_B - V_C}{4} = \frac{V_C - 0}{5} + \frac{V_C - 6}{6} + 1$$

$$30V_B - 74V_C = 0 \qquad \text{(iii)}$$

Solving Eqs (i), (ii), and (iii)

$V_A = 0.803$ volts

$V_B = 0.4088$ volts

$V_C = 0.1658$ volts

Now, $$I_{2\Omega} = \frac{V_A - V_B}{2} = \frac{0.803 - 0.4088}{2} = 0.1971 \text{ A}$$

So, power consumed by 2 Ω resistor

$$P = I_{2\Omega}^2 \times 2 = (0.1971)^2 \times 2 = 0.078 \text{ W}$$

Similarly, $I_{4\Omega} = \dfrac{V_B - V_C}{4} = \dfrac{0.4088 - 0.1658}{4} = 0.06075$ A

So, power consumed by 4 Ω resistor

$$P = I_{4\Omega}^2 \times 4 = (0.06075)^2 \times 4 = 0.01476 \text{ W}$$

9. Using superposition theorem find the voltage across 20 Ω resistor of the circuit shown in Fig. D.30.

Step I: Let us consider that 20 V source acts alone. Removing the other sources the circuit configuration is shown in Fig. D.31.

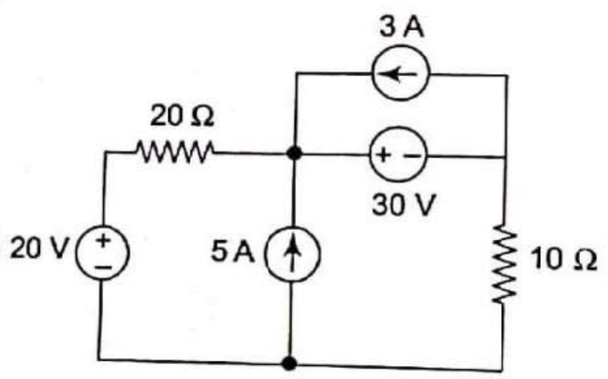

Fig. D.30

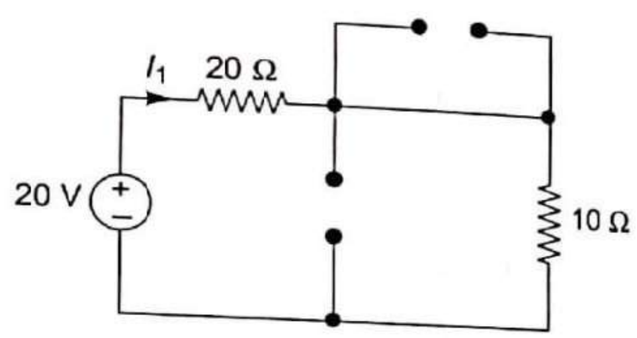

Fig. D.31

Let the current through 20 Ω resistor be I_1.

So, $I_1 = \dfrac{20}{20+10} = 0.667$ A

So, $I_{20\Omega} = 0.667$ A (→)

Step II: Considering 30 V source acting alone the circuit is redrawn as shown in Fig. D.32. Let current through 20 Ω resistor be I_2.

$$I_2 = \frac{30}{20+10} = 1 \text{ A}$$

i.e. $I_{20\Omega} = 1$ A (←)

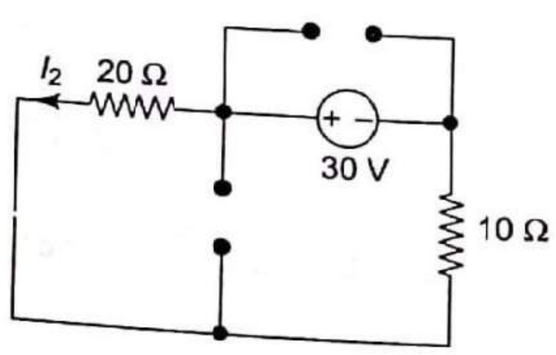

Fig. D.32

Step III: Considering only 3 A source acting alone, the corresponding circuit is shown in Fig. D.33.

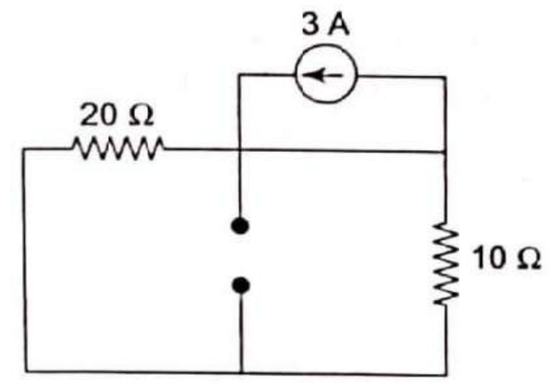

Fig. D.33

As there is short circuit path in parallel with 3 A current source, hence no current flows through 20 Ω resistor due to this source.

So, $I_{20\Omega} = 0$ A

Step IV: Considering only 5 A source acting alone, the corresponding circuit is shown in Fig. D.34.

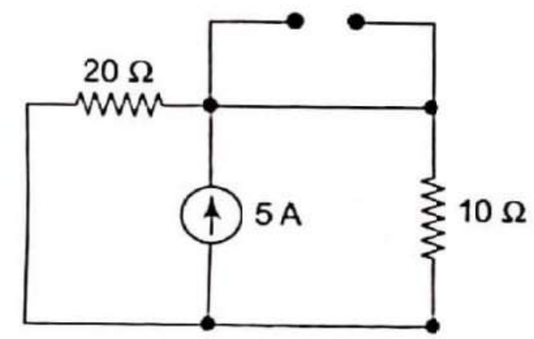

Fig. D.34

In Fig. D.34, by applying current division rule, current through 20 Ω resistor is given as

$$I_{20\Omega} = 5 \times \frac{10}{10+20} = 1.667 \text{ A } (\leftarrow)$$

Step V: Applying superposition theorem, when all sources are acting simultaneously the current through 20 Ω resistor is given as

$$I_{20\Omega} = 0.667\text{A } (\rightarrow) + 1\text{A } (\leftarrow) + 0 \text{ A} + 1.667 \text{ A } (\leftarrow)$$

So, $I_{20\Omega} = 2$ A (←)

So, voltage across 20Ω resistor = 2 × 20 = 40 volts

10. Obtain Thevenin's equivalent circuit with respect to terminals *A* and *B* of the network shown in Fig. D.35.

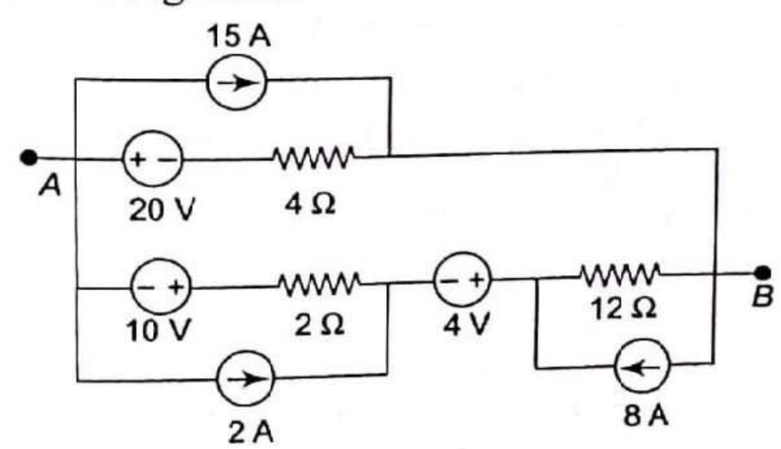

Fig. D.35

In the circuit of Fig. D.35, there are three combinations as follows:

(i) Series combination of voltage source of 20 V and resistor of 4 Ω

(ii) Series combination of voltage source of 10 V and resistor of 2 Ω

(iii) Parallel combination of current source of 8 A and resistor of 12 Ω

Converting the above three combinations into equivalent combinations, we get the reduced circuit as shown in Fig. D.36.

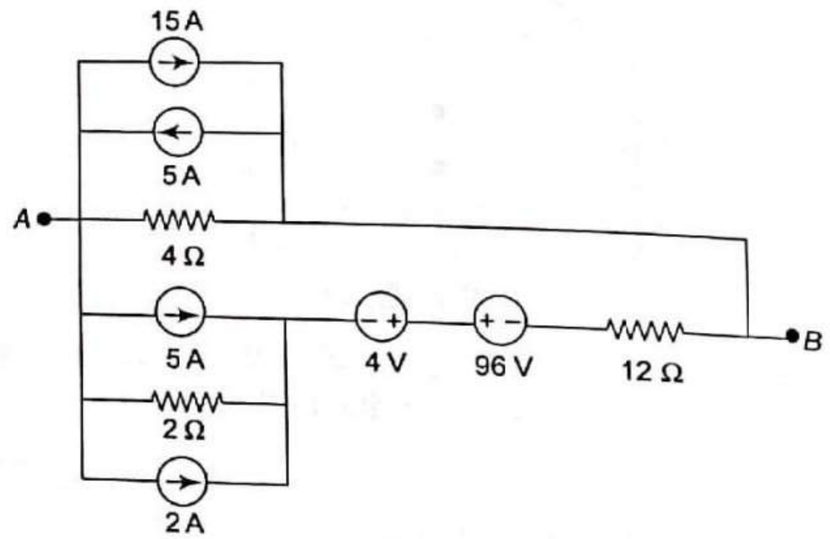

Fig. D.36

By adding the parallel current sources and series voltage sources the network can be reduced as shown in Fig. D.37.

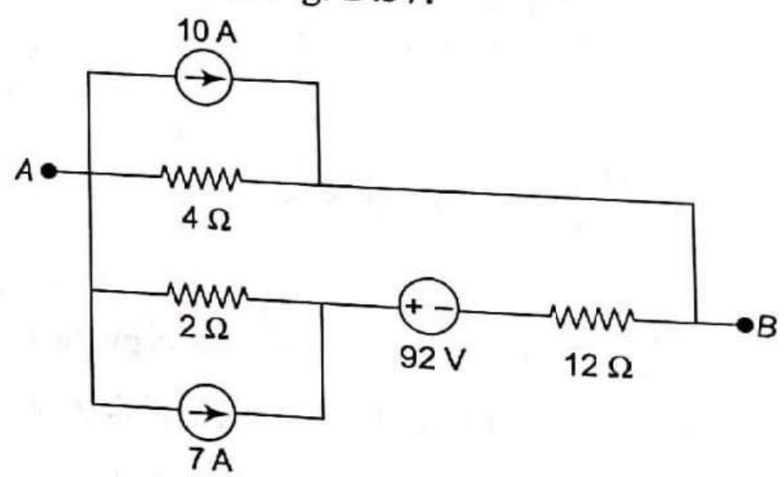

Fig. D.37

In Fig. D.37 there are two parallel combinations as follows:

(i) Current source of 10 A and resistor of 4 Ω

(ii) Current source of 7 A and resistor of 2 Ω

Converting the above parallel combinations into equivalent series combinations we get the simplified circuit as shown in Fig. D.38.

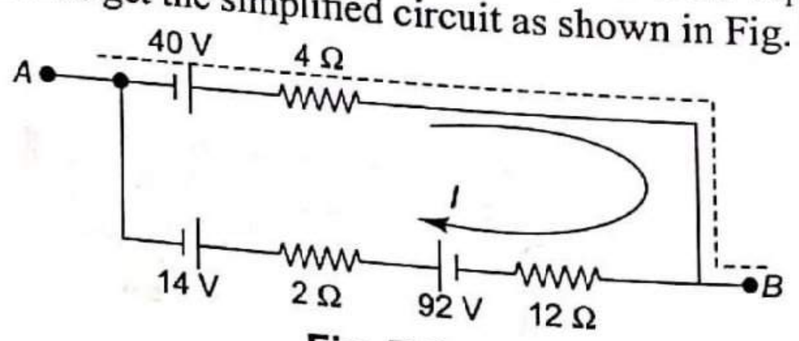

Fig. D.38

In Fig. D.38, the voltage appearing across A and B is called Thevenin's voltage V_{TH}. For calculation of V_{TH}, i.e., V_{AB} the selected path from A to B is marked by dotted line as shown in Fig. D.38.

The current I through the loop can be calculated as follows:

Appling KVL to loop,

$$40 - 4I - 12I + 92 - 2I - 14 = 0$$

So, $I = 6.556$ A

Hence $V_{TH} = V_{AB}$

$= 4I - 40$

$= 4(6.556) - 40 = -13.776$ volts

Calculation of Thevenin's resistance R_{TH} In Fig. D.35, replacing all the sources with their internal resistances, we get the circuit as shown in Fig. D.39.

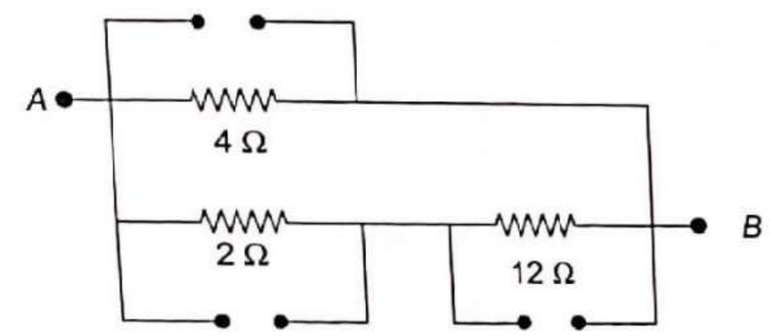

Fig. D.39

Hence, $R_{TH} = R_{AB}$

$= 4 \parallel (2 + 12)$

$= 4 \parallel 14$

$= 3.11\ \Omega$

Now, Thevenin's equivalent circuit is shown in Fig. D.40

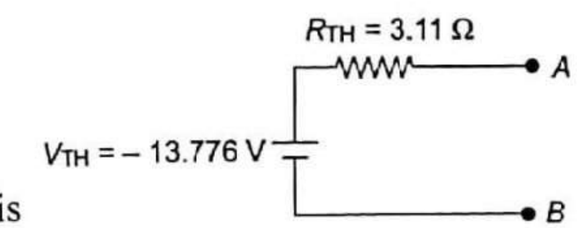

Fig. D.40

11. Determine the values of the unknown quantity in each circuit given in Fig. D.41. Draw the phasor diagram in each case.

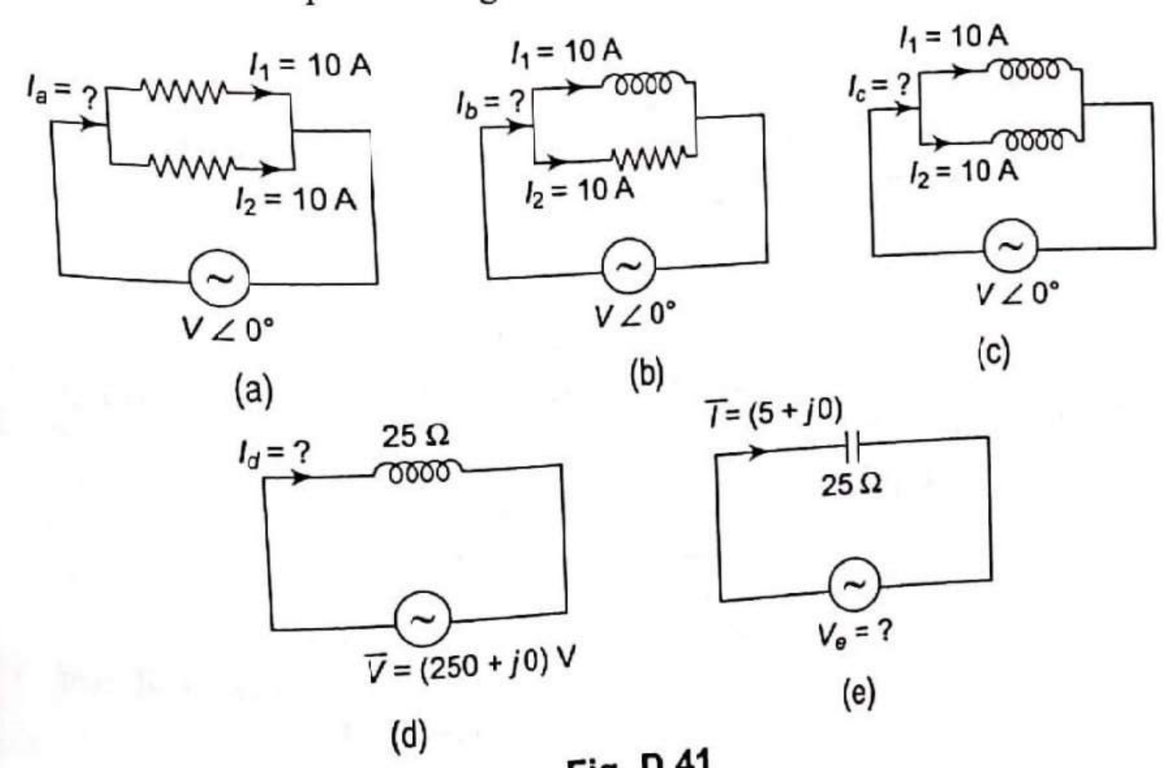

Fig. D.41

(a) The two currents I_1 and I_2 are in phase with applied voltage. See Fig. D.41 (a). Hence, the unknown current is

$$\bar{I}_a = \bar{I}_1 + \bar{I}_2$$
$$= (10 \angle 0) + (10 \angle 0) = (10 + j0) + (10 + j0)$$
$$\bar{I}_a = (20 + j0)\text{ A}$$
$$\bar{I}_a = (20 \angle 0)\text{ A}$$

Phasor diagram:

Taking V as reference

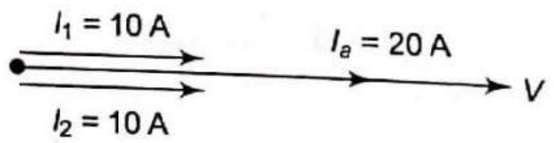

Fig. D.42

(b) The current I_1 lags the applied voltage by 90°, but current I_2 is in phase with applied voltage (Fig. D.41b). Hence, the unknown current is

$$\bar{I}_b = \bar{I}_1 + \bar{I}_2$$
$$= (10 \angle -90) + (10 \angle 0)$$
$$= (0 - j10) + (10 + j0) = (10 - j10)\text{ A} = (14.14 \angle -45)\text{ A}$$

Phasor diagram:

Taking V as reference

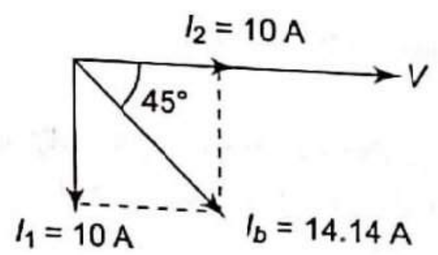

Fig. D.43

(c) Both currents I_1 and I_2 lag the applied voltage by 90° (Fig. D.41c). Hence, the unknown current is given as

$$\bar{I}_c = \bar{I}_1 + \bar{I}_2$$
$$= (10 \angle -90) + (10 \angle -90)$$
$$= (0 - j10) + (0 - j10) = (0 - j20)\text{ A} = (20 \angle -90)\text{ A}$$

Phasor diagram:

Taking V as reference

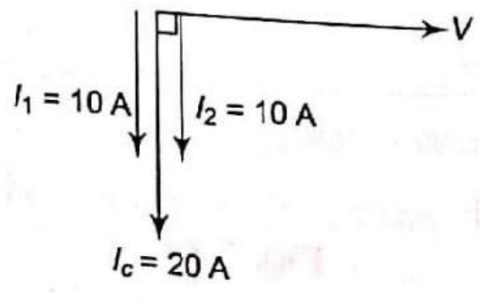

Fig. D.44

(d) The inductive reactance is, $X_L = 25\ \Omega$ or $\bar{X}_L = (0 + j25)\ \Omega$. The unknown current is given as (Fig. D.41d)

$$\bar{I}_d = \frac{\bar{V}}{\bar{X}_L} = \frac{(250 + j0)}{(0 + j25)}$$
$$= \frac{(250\angle 0)}{(25\angle 90)} = (10 \angle -90)\text{ A}$$

Hence, the current I_d is 10 A, and lags the applied voltage by 90°.

Phasor diagram:

Taking V as reference

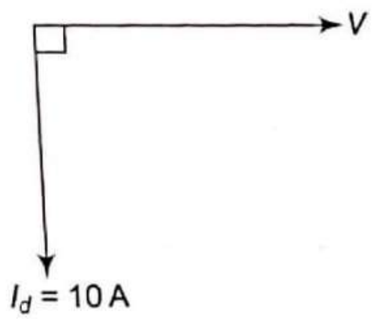

Fig. D.45

(e) The capacitive reactance is $X_C = 25\ \Omega$ or $\bar{X}_C = (0 - j\,25)\ \Omega$. Hence, the unknown voltage is given as

$$\bar{V}_e = \bar{I} \times \bar{X}_C$$
$$= (5 + j0)\,(0 - j25) = (5 \angle 0)\,(25 \angle -90) = (125 \angle -90)\text{ V}$$

Phasor diagram:

Taking current I as reference

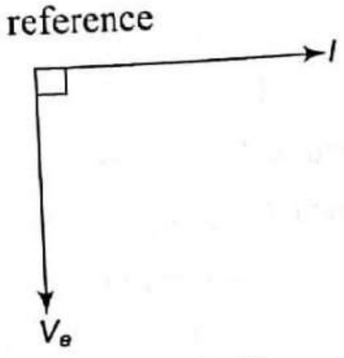

Fig. D.46

12. An *R-L* series circuit takes a current of 3 A at a pf of 0.6 lagging when connected to a 115 V, 50 Hz supply. Another *R-C* series circuit takes a current of 5 A at a pf of 0.707 leading when connected to the same supply. If the two circuits are connected in series across a 230 V, 50 Hz supply. Calculate (a) the current, (b) the power consumed, and (c) the pf of the circuit.

For R-L series circuit

$$I = 3\text{ A},\ \cos\phi = 0.6 \text{ lagging, and } V = 115 \text{ volts}$$

∴ Impedance of the circuit

$$Z_1 = \frac{V}{I} = \frac{115}{3} = 38.33\ \Omega$$

So, $R = Z_1 \cos\phi = 38.33 \times 0.6 = 22.998\ \Omega$

$X_L = Z_1 \sin\phi = 38.33 \times 0.8 = 30.664\ \Omega$

For R-C series circuit

$I = 5$ A, $\cos\phi = 0.707$ leading, and $V = 115$ volts

∴ Impedance of the circuit

$$Z_2 = \frac{V}{I} = \frac{115}{5} = 23\ \Omega$$

So, $R = Z_2 \cos\phi = 16.26\ \Omega$

$X_C = Z_2 \sin\phi = 16.26\ \Omega$

When two circuits are connected in series (Refer Fig. D.47)

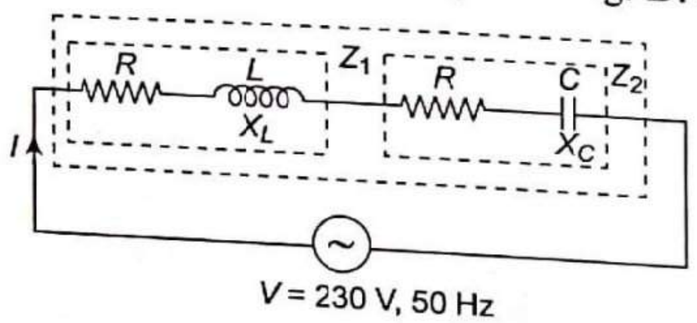

Fig. D.47

Let impedance of the circuit be Z_T.

Total impedance, $\bar{Z}_T = \bar{Z}_1 + \bar{Z}_2$

$= (22.998 + j30.664) + (16.26 - j16.26)$

$= (39.258 + 14.404)\ \Omega = (41.82 \angle 20.15)\ \Omega$

(a) The current,

$$\bar{I} = \frac{\bar{V}}{\bar{Z}_T} = \frac{230\angle 0}{41.82\angle 20.15} = (5.5 \angle -20.15)\ \text{A}$$

(b) The power is consumed in the resistors only.

Hence, power consumed, $P = I^2\,(22.998 + 16.26)$

$= 5.5^2\,(22.998 + 16.26)$

$= 1187.55\ \text{W} = 1.188\ \text{kW}$

(c) Power factor of the circuit

$$= \frac{\text{Net resistance of the circuit}}{\text{Net impedance of the circuit}}$$

$$= \frac{(22.998 + 16.26)}{41.82}$$

$= 0.9387$

As $X_L > X_C$ so the pf is lagging .Therefore pf of the circuit is 0.9387 lagging.

13. For the network shown in Fig. D.48 determine the resonance frequency and input admittance at resonance.

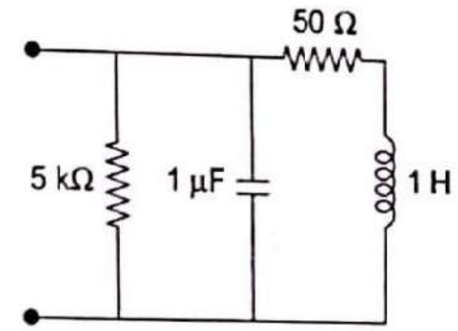

Fig. D.48

Let the total admittance of the circuit be Y ℧. By marking the branch admittances we get the circuit as shown in Fig. D.49.

Let the resonance frequency be ω_r rad/sec or f_r Hz

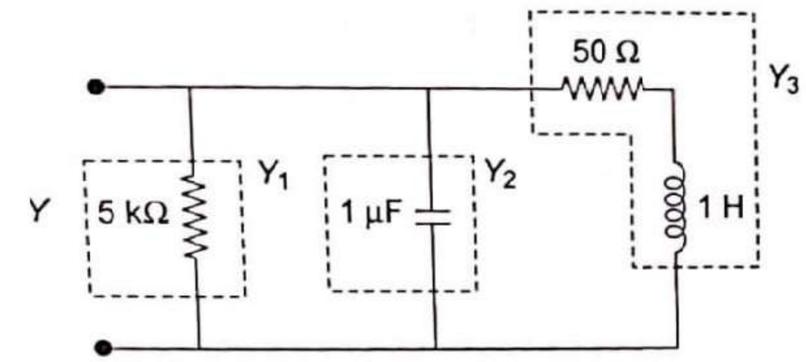

Fig. D.49

Branch admittances are

$$\bar{Y}_1 = \frac{1}{(5000\angle 0)} = (2 \times 10^{-4} \angle 0)\ ℧ = (2 \times 10^{-4} + j0)\ ℧$$

$$\bar{Y}_2 = \frac{1}{\left(\dfrac{1}{\omega_r \times 10^{-6}} \angle -90\right)}$$

$$= [(\omega_r \times 10^{-6}) \angle 90]\ ℧ = [\,0 + j(\omega_r \times 10^{-6})]\ ℧$$

$$\bar{Y}_3 = \frac{1}{(50 + j\omega_r)}\,℧$$

$$\bar{Y}_3 = \frac{(50 - j\omega_r)}{(50 + j\omega_r)(50 - j\omega_r)}$$

$$\bar{Y}_3 = \frac{50 - j\omega_r}{(50)^2 + \omega_r^2}$$

$$\bar{Y}_3 = \left[\frac{50}{(50)^2 + \omega_r^2} - j\frac{\omega_r}{(50)^2 + \omega_r^2}\right]℧$$

The total admittance of the circuit

$$\bar{Y} = \bar{Y}_1 + \bar{Y}_2 + \bar{Y}_3$$

$$\bar{Y} = (2 \times 10^{-4} + j\,0) + [0 + j\,(\omega_r \times 10^{-6})] + \left[\frac{50}{(50)^2 + \omega_r^2} - j\frac{\omega_r}{(50)^2 + \omega_r^2}\right]$$

$$\bar{Y} = \left\{\underbrace{\left[2\times10^{-4} + \frac{50}{(50)^2+\omega_r^2}\right]}_{\text{Conductance of the circuit}} + j\underbrace{\left[(\omega_r\times10^{-6}) - \frac{\omega_r}{(50)^2+\omega_r^2}\right]}_{\text{Susceptance of the circuit}}\right\}\mho$$

For resonance the susceptance should be zero.

So, $$\left[(\omega_r\times10^{-6}) - \frac{\omega_r}{(50)^2+\omega_r^2}\right] = 0$$

$$(\omega_r\times10^{-6})\left((50)^2+\omega_r^2\right) - \omega_r = 0$$

or $$2500 + \omega_r^2 = 10^6$$

or $\omega_r = 998.75$ rad/sec.

So, $2\pi f_r = 998.75$

$$f_r = \frac{998.75}{2\pi} = 159 \text{ Hz}$$

Now, admittance at resonance is given by

$$Y = \left[2\times10^{-4} + \frac{50}{(50)^2+\omega_r^2}\right]\mho$$

$$Y = \left[2\times10^{-4} + \frac{50}{(50)^2+(998.75)^2}\right]\mho$$

$$Y = 0.00025\ \mho$$

14. A lamp rated 500 W takes a current of 5 A when in series with an inductance. (a) Find the value of the inductance connected in series to operate the combination from 250 V, 50 Hz mains. (b) Also find the value of capacitance which should be connected in parallel with the above combination to raise the overall power factor to unity.

Lamp Rating : 500 W

Lamp is considered as resistive load. It takes a current of 5 A; so the resistance of the lamp R,

$$R = \frac{P}{I^2} = \frac{500}{5^2} = 20\ \Omega$$

(a) Let the value of inductance L H, connected in series with lamp to operate from 250 V, 50 Hz supply [Fig. D.50]. The lamp takes a current 5 A.

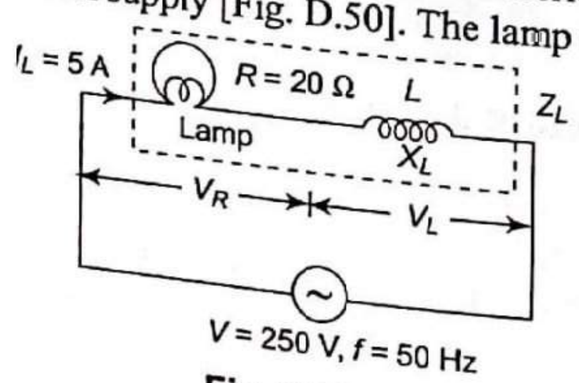

Fig. D.50

Voltage across the lamp, $V_R = I_L \times R = 5 \times 20 = 100$ volts.

Impedance of the circuit, $Z_L = \dfrac{V}{I_L} = \dfrac{250}{5} = 50\ \Omega$

If V_L is the voltage across the inductor,

$$V = \sqrt{V_R^2 + V_L^2}$$

$$250 = \sqrt{100^2 + V_L^2}$$

So, $V_L = 229.13$ volts

or $I_L X_L = 229.13$

or $X_L = \dfrac{229.13}{I_L} = \dfrac{229.13}{5} = 45.826\ \Omega$

or $2\pi fL = 45.826$

So, $L = \dfrac{45.826}{2\pi f} = \dfrac{45.826}{2\pi\times50} = 0.1459$ H

Power factor of the circuit (shown in Fig. D.50).

$$\text{Pf} = \cos\phi_L = \frac{R}{Z_L} = \frac{20}{50} = 0.4 \text{ lagging}$$

So, phase angle, $\phi_L = \cos^{-1} 0.4 = 66.42$

Thus I_L lags to V by 66.42°.

(b) Now capacitor is connected in parallel with above circuit to raise the overall power factor to unity [Refer Fig. D.51].

Let the current flowing through the capacitor be I_C and total circuit current be I A.

Now we need value of C, so that overall pf raise to unity, i.e., parallel resonance occurs [See the phasor diagram shown in Fig. D.52].

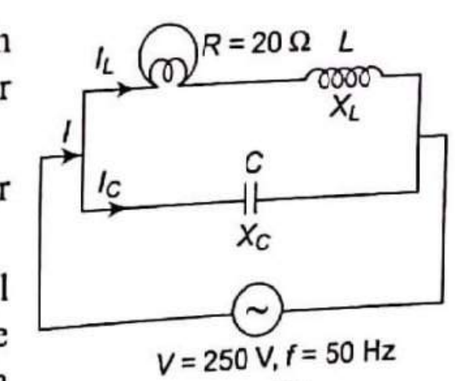

Fig. D.51

Phasor diagram (Not to scale):

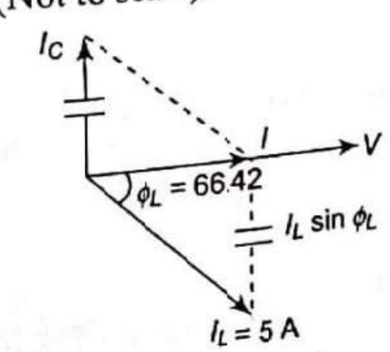

Fig. D.52

Hence, at unity power factor (or at resonance)

$$I_C = I_L \sin\phi_L$$

So, $I_C = 5 \times \sin 66.42$

or, $I_C = 4.583$ A

Hence, $X_C = \dfrac{V}{I_c} = \dfrac{250}{4.583} = 54.55\Omega$

or $\dfrac{1}{2\pi fC} = 54.55$

or $C = \dfrac{1}{2\pi f \times 54.55}$

$C = \dfrac{1}{2\pi \times 50 \times 54.55}$

$C = 58.35 \times 10^{-06}$ F

$C = 58.35\ \mu$F

15. The load connected to a 3-ϕ supply contains three similar impedances which are connected in star (Y). The line current is 50 A. The kVA and kW inputs are 50 and 27 respectively. Find the line and phase voltages, kVAR input and the resistance and reactance of each impedance.

Three similar impedances are connected in star (Y) to a 3-ϕ supply. Let the value of each impedance be Z_{ph}.

Given: $I_L = 50$ A

kVA = 50

kW = 27

Now, kVA = 50

or $\sqrt{3}\, V_L I_L = 50 \times 10^3$

or $\sqrt{3}\, V_L \times 50 = 50 \times 10^3$

or $V_L = 577.35$ volts

Phase voltage, $V_{ph} = \dfrac{V_L}{\sqrt{3}} = \dfrac{577.35}{\sqrt{3}} = 333.33$ volts

By Ohm's law,

$$Z_{ph} = \frac{V_{ph}}{I_{ph}} = \frac{V_{ph}}{I_L} = \frac{333.33}{50} = 6.67\ \Omega$$

Phase angle (ϕ) of Z_{ph} can be calculated as

$P = \sqrt{3}\ V_L I_L \cos\phi$

or $27 \times 10^3 = \sqrt{3} \times 577.35 \times 50 \times \cos\phi$

or $\cos\phi = \dfrac{27 \times 10^3}{\sqrt{3} \times 577.35 \times 50} = 0.54$

So, $\phi = 57.32$

Now impedance Z_{ph} can be expressed in polar form as

$$\bar{Z}_{ph} = (Z_{ph} \angle \phi)\ \Omega$$
$$= (6.67 \angle 57.32)\ \Omega$$
$$= (3.6 + j5.62)\ \Omega$$

From rectangular form,

Resistance of each impedance, $R = 3.6\ \Omega$

Reactance of each impedance, $X = 5.62\ \Omega$

Now,

$$\text{kVA} = \sqrt{\text{kW}^2 + \text{kVAR}^2}$$

So, $\text{kVAR} = \sqrt{\text{kVA}^2 - \text{kW}^2}$

$= \sqrt{(50)^2 - (27)^2}$

$= 42.08$

16. The input power to a 3-ϕ motor was measured by two wattmeters whose readings were 12 kW and – 4 kW and the line voltage was 200 V. Calculate the power factor and the line current.

The wattmeter reading,

$W_2 = 12$ kW and $W_1 = -4$ kW

Line voltage, $V_L = 200$ V

If ϕ is the power factor angle, then

$$\phi = \tan^{-1}\left\{\frac{\sqrt{3}(W_2 - W_1)}{(W_1 + W_2)}\right\}$$

$$\phi = \tan^{-1}\left\{\frac{\sqrt{3}(12 - (-4))}{(-4 + 12)}\right\}$$

$\phi = \tan^{-1}\{3.464\}$

$\phi = 73.9$

So, pf = $\cos\phi = \cos 73.9 = 0.277$

Now, Power = $(W_1 + W_2)$

or $\sqrt{3}\, V_L I_L \cos\phi = (-4 + 12) \times 10^3$

or $\sqrt{3}\, V_L I_L \cos\phi = 8000$

or $\sqrt{3} \times 200 \times I_L \times 0.277 = 8000$

or $I_L = 83.37$ A

17. Power input to a 3-ϕ, 440 V, 37.3 kW induction motor, whose efficiency and power factor are respectively 88 per cent and 0.82, is to be measured by two

wattmeter method. Find the reading of both the wattmeters and full load line current drawn by the motor.

Three phase induction motors act as a 3-ϕ, balanced load with lagging pf. It takes electrical power from 3-ϕ supply and converted into mechanical power.

Now,

Power output of 3-phase induction motor = 37.3 kW

Efficiency of the motor = 88%

$$\text{Power input to the motor} = \frac{\text{Out put}}{\text{Efficiency}} = \frac{37.3}{0.88} = 42.386 \text{ kW}$$

Power input when measured by two wattmeter method

Let W_1 and W_2 be the reading of the two wattmeters.

Hence, $W_1 + W_2 = 42.386$ (i)

Power factor of the motor $\cos\phi = 0.82$ lagging

Power factor angle, $\phi = \cos^{-1} 0.83 = 34.91°$

In power measurement by two wattmeter method,

$$\tan\phi = \frac{\sqrt{3}(W_2 - W_1)}{W_1 + W_2}$$

So,
$$\tan 34.91 = \frac{\sqrt{3}(W_2 - W_1)}{42.386}$$

so $W_2 - W_1 = 17.08$ kW (ii)

Solving Eqs (i) and (ii),

$W_1 = 12.653$ kW

$W_2 = 29.733$ kW

Now, Power input = $\sqrt{3}\, V_L I_L \cos\phi$

$$42.386 \times 10^3 = \sqrt{3} \times 440 \times I_L \times 0.82$$

So, $I_L = 67.83$ A

18. A balanced 3-ϕ, star connected load of a 100 kW takes a leading current of 80 A, when connected to a 3-phase, 1100 V, 50 Hz supply. Find the circuit constants of the load per phase.

Line voltage across the load, $V_L = 1100$ volts

$$\text{Phase voltage}, V_{ph} = \frac{1100}{\sqrt{3}} = 635 \text{ volts}$$

Current taken by the load, i.e., line current, $I_L = 80$ A

For star connection, phase current (I_{ph}) = Line current (I_L)

So, Phase current, $I_{ph} = 80$ A

Let the impedance per phase be Z_{ph} and resistance of the load per phase be R_{ph}.

Now,
$$Z_{ph} = \frac{V_{ph}}{I_{ph}} = \frac{635}{80} = 7.938\ \Omega$$

Total power taken by the load, $P = 100$ kW $= 100 \times 10^3$ W

So, $P = \sqrt{3}\, V_L I_L \cos\phi$

or $100 \times 10^3 = \sqrt{3} \times 1100 \times 80 \times \cos\phi$

or $\cos\phi = 0.656$

We know that, Power factor $= \cos\phi = \dfrac{R_{ph}}{Z_{ph}}$

So, $R_{ph} = Z_{ph} \times \cos\phi$

$= 7.938 \times 0.656 = 5.21\ \Omega$

As load takes the leading current, it is capacitive

So, $Z_{ph} = \sqrt{R_{ph}^2 + X_C^2}$

or $X_C = \sqrt{Z_{ph}^2 - R_{ph}^2}$

$$= \sqrt{(7.938)^2 - (5.21)^2} = 6\ \Omega$$

Thus capacitance per phase,

$$C = \frac{1}{2\pi f X_C}$$

$$C = \frac{1}{2\pi \times 50 \times 6}$$

$$C = 530.3 \times 10^{-6} \text{ F} = 530.3\ \mu\text{F}$$

19. A 100 kVA, 440/220 V, 1-ϕ, 50 Hz core type transformer has an efficiency of 98.5%, when supplying full load at 0.8 power factor lagging and an efficiency of 99%, when supplying half load at unity power factor. Find the iron losses and copper losses at full load.

Let, Iron losses at full load = W_i kW and

Copper loss at full load = $[W_{cu}]_{FL}$ kW

When supplying full load at 0.8 power factor lagging efficiency is given as 98.5%

So,
$$\eta = \frac{(x \times \text{full-load kVA} \times \text{pf})}{(x \times \text{full-load kVA} \times \text{pf}) + W_i + x^2[W_{CU}]_{FL}}$$

So,
$$0.985 = \frac{(1 \times 100 \times 0.8)}{(1 \times 100 \times 0.8) + W_i + [W_{CU}]_{FL}} \quad \text{(i)}$$

So, $0.985\, W_i + 0.985[W_{CU}]_{FL} = 1.2$

When supplying half load at unity power factor efficiency is given as 99%

So, $$\eta = \frac{(x \times \text{full-load kVA} \times \text{pf})}{(x \times \text{full-load kVA} \times \text{pf}) + W_i + x^2[W_{CU}]_{FL}}$$

So, $$0.99 = \frac{\left(\frac{1}{2} \times 100 \times 1\right)}{\left(\frac{1}{2} \times 100 \times 1\right) + W_i + \left(\frac{1}{2}\right)^2 [W_{CU}]_{FL}}$$

So, $0.99\, W_i + 0.2475\, [W_{CU}]_{FL} = 0.5$ (ii)

Solving Eqs (i) and (ii), we get

Iron losses at full load, $W_i = 267.3$ W

Full load copper loss, $[W_{CU}]_{FL} = 950.9$ W

20. The following results were obtained on a 30 kVA, 2000/110 V transformer:

O.C. Test: 110 V, 9 A, 360 W (on L.V. side)

S.C. Test: 80 V, 15 A, 900 W (on H.V. side)

Calculate the parameters of equivalent circuit referred to primary side

From O.C. Test:

The test is conducted on L.V. side, i.e., secondary side. The readings are given as,

$V_2 = 110$ V, $I_0 = 9$ A and $W = 360$ W

We have $W = V_1 I_0 \cos \phi_0$

So, $$\cos \phi_0 = \frac{W}{V_1 I_0} = \frac{360}{110 \times 9} = 0.3636$$

So, $\phi_0 = \cos^{-1} 0.3636 = 68.68°$

Also, $I_W = I_0 \cos \phi_0 = 9 \times 0.3636 = 3.2724$

$I_\mu = I_0 \sin \phi_0 = 9 \times 0.9316 = 8.3844$

So, $$R_0 = \frac{V_1}{I_W} = \frac{110}{3.2724} = 33.61\ \Omega$$

$$X_0 = \frac{V_1}{I_\mu} = \frac{110}{8.3844} = 13.12\ \Omega$$

The above values of R_0 and X_0 are referred to secondary side, for equivalent circuit we required these values referred to primary side.

Now, Transformation ratio, $K = \frac{E_2}{E_1} = \frac{110}{2000} = 0.055$

So, when R_0 is transferred to primary side, its value becomes

$$= \frac{R_0}{K^2} = \frac{33.61}{(0.055)^2} = 11110.74\ \Omega$$

Similarly when X_0 is transferred to primary side, its value becomes

$$= \frac{X_0}{K^2} = \frac{13.12}{(0.055)^2} = 4337.19\ \Omega$$

From S.C. Test:

The test is conducted on H.V., i.e., primary side.

The readings are: $V_{SC} = 80$ V, $I_1 = 15$ A, $W = 900$ W

We have $W = I_1^2 R_{01}$

So, $$R_{01} = \frac{W}{I_1^2} = \frac{900}{(15)^2} = 4\ \Omega$$

$$Z_{01} = \frac{V_{SC}}{I_1} = \frac{80}{15} = 5.33\ \Omega$$

$$X_{01} = \sqrt{Z_{01}^2 - R_{01}^2} = \sqrt{5.33^2 - 4^2} = 3.5226\ \Omega$$

Thus, the parameters of equivalent circuit referred to primary side are:

$R_0 = 11110.74\ \Omega$

$X_0 = 4337.19\ \Omega$

$R_{01} = 4\ \Omega$

$X_{01} = 3.5226\ \Omega$

Bibliography

Bhattacharya, S.K., *Electrical Machines*, 2nd ed., Tata McGraw-Hill, New Delhi, 2000.

Bobrow, Leonard S., *Fundamentals of Electrical Engineering*, 2nd ed., Oxford University Press, New Delhi, 2003.

Boylestad, Robert L., Louis Nashelsky, and K. Lal Kishore, *Electronic Devices and Circuit Theory*, Pearson Education, Delhi, 2006.

Cotton, H., *Advanced Electrical Technology*, ELBS Publications, London, 1967.

Hughes, Edward, *Electrical and Electronic Technology*, 8th ed., revised by McKenzie Smith with John Hiley and Keith Brown, Pearson Education, Delhi, 2006.

Husain, Ashfaq, *Electric Machines*, Dhanpat Rai and Company, Delhi, 2002.

Jain, Malika and Priyanka Jain, *ABC of Electrical Engineering*, 3rd ed., Dhanpat Rai Publishing, New Delhi, 2003.

Malvind, Albert Paul, *Electronic Principles*, 6th ed., Tata McGraw-Hill, New Delhi, 2005.

Mehta, V.K., *Introduction to Electrical Engineering*, S. Chand and Company, New Delhi, 1987.

Mittal, V.N. and Arvind Mittal, *Basic Electrical Engineering*, 2nd ed., Tata McGraw-Hill Publishing, New Delhi, 2006.

Nagrath, I.J., *Basic Electrical Engineering*, Tata McGraw-Hill Publishing, New Delhi, 1991.

Say, M.G., *Design of Alternating Current Machinery*, 5th ed., ELBS, London, 1983.

Sudhakar, A. and Shyammohan S. Palli, *Circuits and Networks: Analysis and Synthesis*, 3rd ed., Tata McGraw-Hill, New Delhi, 2007.

Toro, Vincent Del, *Electrical Engineering Fundamentals*, 2nd ed., Prentice-Hall of India, New Delhi, 2000.

May 2014

(REVISED COURSE)

Time: 3 Hours [Total Marks : 80]

N.B.: (1) Question No. 1 is compulsory.
(2) Solve any three questions from the remaining five questions.
(3) Assume data if required.
(4) Figure to the right indicate full marks.

1. (a) Using Source conversion, reduce the circuit shown in figure into single current source in parallel with single resistance. 3

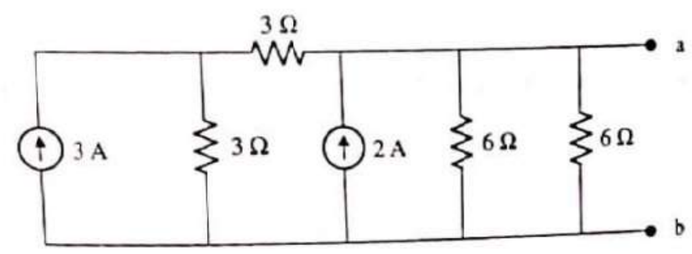

(b) Derive the condition for maximum power transfer through the network. 3

(c) An alternating current takes 3.375 ms to reach 15 A for the first time after becoming instantaneously zero. The frequency of the current is 40 Hz. Find the Maximum value of the alternating current. 3

(d) Derive the equation for resonance frequency [f_r] in parallel resonance circuit. 3

(e) Three identical coils each [4.2 + j 5.6] ohm are connected in star across 415 V, 3 phase, 50 Hz supply. Determine (i) V_{ph} (ii) I_{ph} (iii) Power factor. 2

(f) What are the losses in the transformer? Explain why the rating of transformer in KVA not in KW. 4

(g) Draw complete VI characteristics of a Diode. 2

Solution

(a) Converting parallel combination of current source of 3 A and resistor of 3 Ω into equivalent series combination of voltage source and resistor, we get the following circuit.

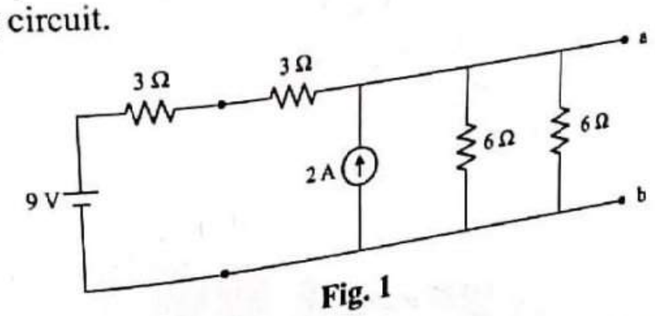

Fig. 1

Two 3 Ω resistor are in series. By adding them

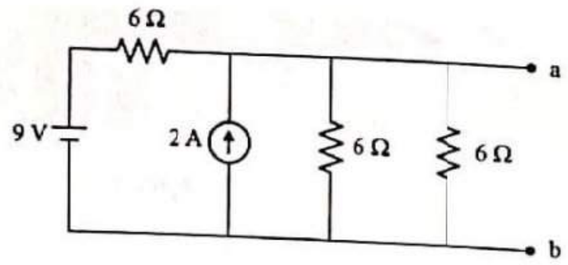

Fig. 2

Converting series combination of voltage source of 9 V and resistor of 6 Ω into equivalent parallel combination of current source and resistor, we get the circuit shown in Fig. 3.

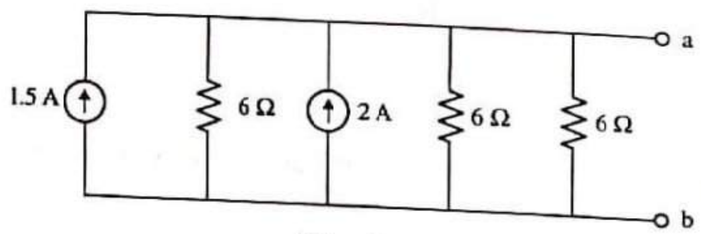

Fig. 3

In Fig. 3, all elements are in parallel. So adding the parallel current sources and replacing the three parallel resistors by the equivalent resistor we get the following circuit.

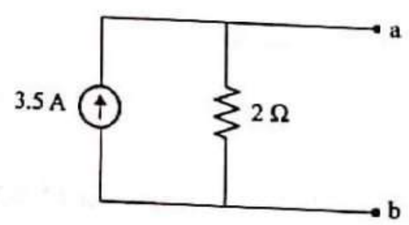

Fig. 4

(b) Refer to Section 1.19.

(c) Fig. 5 shows the waveform of the alternating current. It is given that,

When $t = 3.375 \times 10^{-3}$ sec; $i = 15$ A

and the frequency $f = 40$ Hz

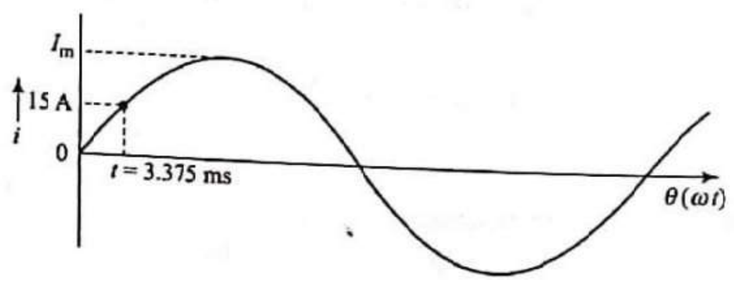

Fig. 5

Equation of alternating current is given as

$$i = I_m \sin \omega t$$

or $$i = I_m \sin 2\pi f t$$

So $$15 = I_m \sin (2\pi \times 40 \times 3.375 \times 10^{-3})$$

So $$15 = I_m \sin (0.27\pi)$$

So $$15 = I_m \sin \left(0.27\,\pi \times \frac{180}{\pi}\right)^{\circ}$$

So $$I_m = 20 \text{ A}$$

(d) Refer to Section 2.3.4

(e) Given:

When three similar coils are connected in star, we get a three-phase, Y-connected balanced load as shown in Fig. 6.

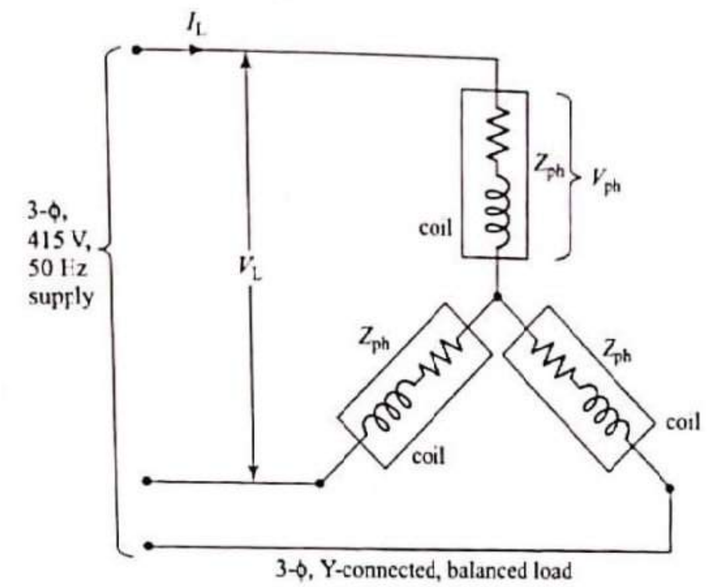

Fig. 6

Let the impedance of each coil be Z_{ph}.

Given

$$V_L = 415 \text{ V}$$
$$\overline{Z}_{ph} = (4.2 + j\,5.6)\ \Omega$$

So, $$\overline{Z}_{ph} = (7\angle 53.13)\ \Omega$$

From polar form, $Z_{ph} = 7\ \Omega$ and $\phi = 53.13°$

Phase voltage, $V_{ph} = \dfrac{V_L}{\sqrt{3}} = \dfrac{415}{\sqrt{3}} = 239.6$ V

Phase current, $I_{ph} = \dfrac{V_{ph}}{Z_{ph}} = \dfrac{239.6}{7} = 34.23$ A

Power factor, pf $= \cos \phi$

$= \cos (53.13)$

$= 0.6$ lagging

(f) Refer to Sections 4.7 and 4.11.

(g) Refer to Section 5.6.

2. (a) Determine the potential difference V_{AB} for the given network. **6**

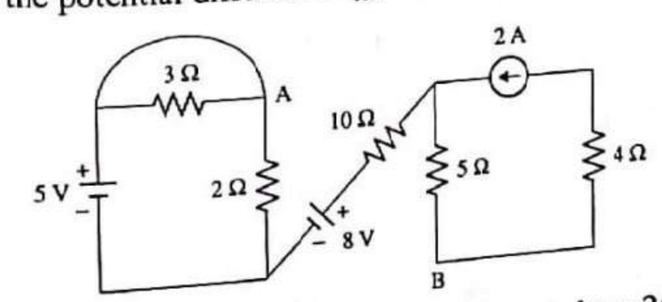

(b) When a resistor and an inductor in series are connected to a 240 V supply, a current of 3 A flows lagging 37° behind the supply voltage, while voltage across inductor is 171 volt. Find the resistance of resistor, resistance and reactance of the inductor. **8**

(c) Draw phasor diagram of single phase transformer on resistive load [Unity power factor] and inductive load [lagging power factor]. 6

Solution

(a) Refer Example 1.40 (page no. 52).

(b) Refer Example 2.39 (page no. 243).

(c) Refer to Section 4.10.2.

3. (a) Three similar coils, connected in star, take a total power of 18 kW at a power factor of 0.866 lagging from a three phase 400 volts, 50 Hz system. Calculate the resistance and inductance of each coil. Also draw the phasor diagram showing the currents and voltages. 8

(b) A 5 kVA 200/400 volt, 50 Hz, single phase transformer gave the following test results. 6

O.C. test [LV Side]	200 V	0.7 A	60 W
S.C. test [HV Side]	22 V	16 A	120 W

(i) Draw the equivalent circuit of the transformer referred to LV side and insert all parameters values.

(ii) Efficiency at 0.9 power factor leading if operating at rated load.

(e) What is function of filter in rectifier circuit? Draw circuit of rectifier with inductor filter. 2

(d) Explain with circuit diagram working of a CE configuration of BJT. 4

Solution

(a) When three similar coils are connected in star, we get the 3-ϕ, Y-connected, balanced load as shown in Fig. 7.

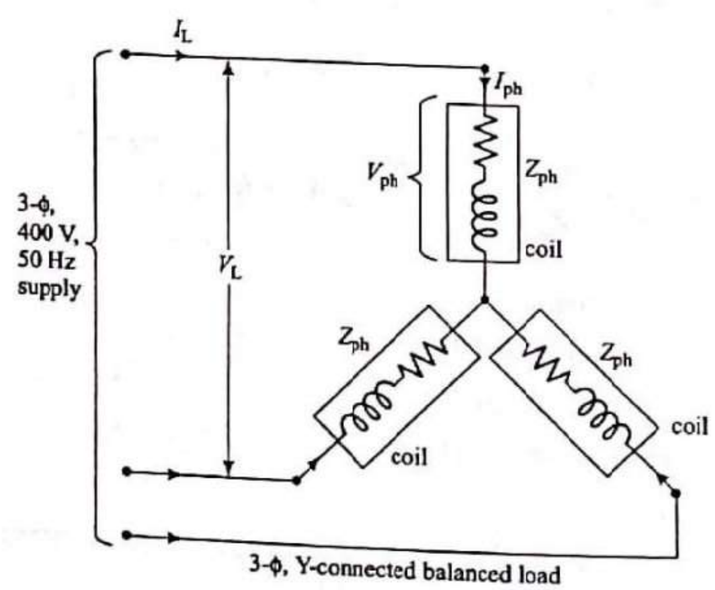

Fig. 7

Phase voltage, $V_{ph} = \dfrac{V_L}{\sqrt{3}} = \dfrac{400}{\sqrt{3}} = 230.94$ V

Now, total power, $P = \sqrt{3}\, V_L I_L \cos\phi$ watts

or $18 \times 10^3 = \sqrt{3} \times 400 \times I_L \times 0.866$

So, $I_L = 30$ A

In star connection, $I_{ph} = I_L = 30$ A

By Ohm's law,

$$Z_{ph} = \frac{V_{ph}}{I_{ph}} = \frac{230.94}{30} = 7.698\ \Omega$$

Phase angle of Z_{ph}, $\phi = \cos^{-1} 0.866$

So, $\phi = 30$

Now, polar form of phase impedance, $\overline{Z}_{ph} = (7.698\angle 30)\ \Omega$

Rectangular form of phase impedance,

$\overline{Z}_{ph} = (6.67 + j\,3.849)\ \Omega$

From rectangular form of Z_{ph}

Resistance of each phase (coil), $R = 6.67\ \Omega$

Inductive reactance of each phase (coil), $X_L = 3.849\ \Omega$

As $X_L = 2\pi f L$

So, $3.849 = 2\pi \times 50 \times L$

So, $L = 0.01225$ H

or $L = 12.25$ mH

Phasor diagram (Ref Fig. 8)

$V_{ph} = 230.94$ V, $I_{ph} = 30$ A, $V_L = 400$ V, $\phi = 30$

Scale: For voltage 100 V = 1 cm

For current 10 A = 1 cm

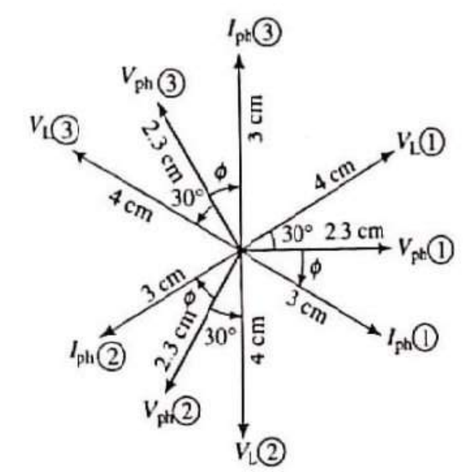

Fig. 8

(b) (i) Equivalent circuit referred to primary

Form OC test:

The test is carried out on LV side i.e. primary side.

The readings are: $V_1 = 200$ V, $I_0 = 0.7$ A, $W = 60$ W

We have, $W = V_1 I_0 \cos\phi_0$

So, $\cos\phi_0 = \dfrac{W}{V_1 I_0} = \dfrac{60}{200 \times 0.7} = 0.429$

and $\sin\phi_0 = 0.9033$

Now, $I_W = I_0 \cos\phi_0 = 0.7 \times 0.429 = 0.3003$ A

$I_\mu = I_0 \sin\phi_0 = 0.7 \times 0.9033 = 0.6323$ A

Hence, $R_0 = \dfrac{V_1}{I_W} = \dfrac{200}{0.3003} = 666\ \Omega$

$$X_0 = \frac{V_1}{I_\mu} = \frac{200}{0.6323} = 316.31\ \Omega$$

Form SC test:

The test is carried out on HV side i.e. secondary side.

The readings are: $V_{SC} = 22$ V, $I_2 = 16$ A, $W = 120$W

Now, $W = I_2^2 R_{02}$

So, $$R_{02} = \frac{W}{I_2^2} = \frac{120}{16^2} = 0.46875\ \Omega$$

$$Z_{02} = \frac{V_{SC}}{I_2} = \frac{22}{16} = 1.375\ \Omega$$

$$X_{02} = \sqrt{Z_{02}^2 - R_{02}^2} = \sqrt{1.375^2 - 0.46875^2}$$
$$= 1.29\ \Omega$$

Now, Transformation ratio, $K = \frac{400}{200} = 2$

So, $$R_{01} = \frac{R_{02}}{K^2} = \frac{0.46875}{(2)^2} = 0.117\ \Omega$$

$$X_{01} = \frac{X_{02}}{K^2} = \frac{1.29}{(2)^2} = 0.3225\ \Omega$$

The equivalent circuit referred to primary is as shown in Fig. 9.

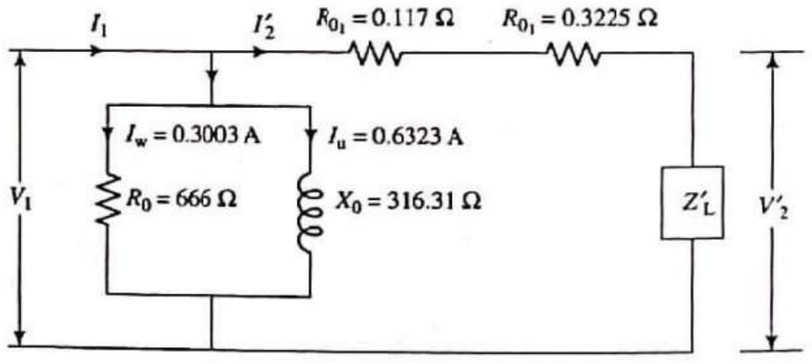

Fig. 9

(ii) Efficiency at rated load 0.9 power factor leading

$$(I_2)_{FL} = \frac{\text{KVA rating} \times 1000}{E_2} = \frac{5 \times 1000}{400} = 12.5\ \text{A}$$

Now, copper loss at full load $[W_{Cu}]_{FL}$

$$[W_{Cu}]_{FL} = (I_2)_{FL}^2 \times R_{02}$$
$$= (12.5)^2 \times 0.46875$$
$$= 73.24\ \text{W} = 0.07324\ \text{kW}$$

From OC test, $W_i = 60$ W $= 0.06$ kW

So, Efficiency at any load can be calculated as:

$$\%\ \eta = \frac{(x \times \text{full-load kVA} \times \text{pf})}{(x \times \text{full-load kVA} \times \text{pf}) + W_i + x^2 [W_{Cu}]_{FL}} \times 100$$

So, $$\%\ \eta = \frac{(1 \times 5 \times 0.9)}{(1 \times 5 \times 0.9) + 0.06 + (1)^2 \times 0.07324} \times 100$$

$$\%\ \eta = 97.12$$

(c) Refer to Section 5.12.

(d) Refer to Section 5.10.9.

4. (a) Find an equivalent resistance between A and B. **7**

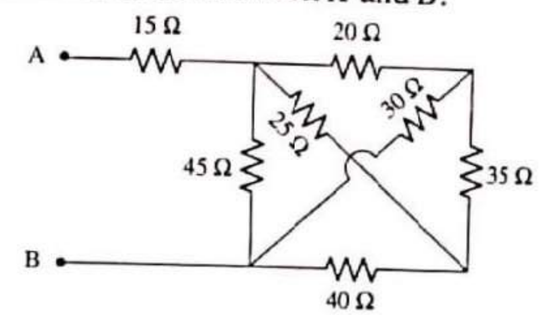

(b) A circuit consists of three parallel branches. The branch currents are given as $i_1 = 10 \sin \omega t$, $i_2 = 20 \sin (\omega t + 60°)$, and $i_3 = 75 \sin (\omega t - 30)$. Find the resultant current and express it in the form $i = I_m \sin (\omega t + \phi)$. If the supply frequency is 50 Hz, calculate the resultant current when (i) $t = 0$, (ii) $t = 0.001$ sec. **5**

(c) A 3 phase, 10 KVA load has power factor of 0.342. The power is measured by two wattmeter method. Find the reading of each wattmeter when **4**

(i) Power factor is leading

(ii) Power factor is lagging

(d) Explain working of centre tap full wave rectifier with waveforms. **4**

Solution

(a) Marking the different nodes we get the circuit as shown in Fig. 10.

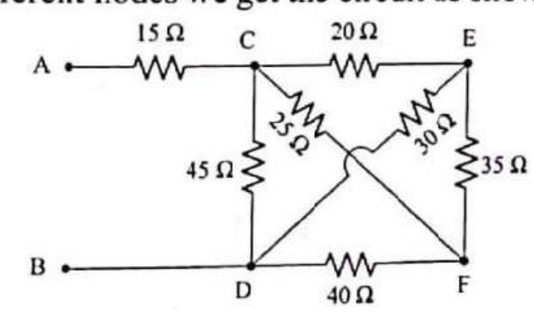

Fig. 10

By taking the branch ED (30 Ω resistor) from outside, the cross connection can be avoided. Thus the circuit of Fig. 10 can be simplified as shown in Fig. 11.

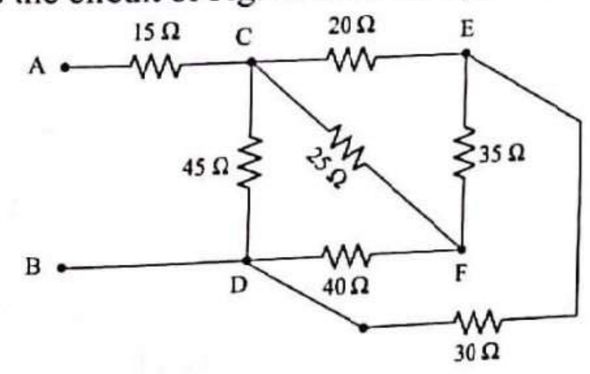

Fig. 11

Converting the star connection formed by 40 Ω, 25 Ω and 35 Ω resistors into equivalent delta connection i.e. $YDCE \Rightarrow \Delta\, DCE$, we get the following circuit.

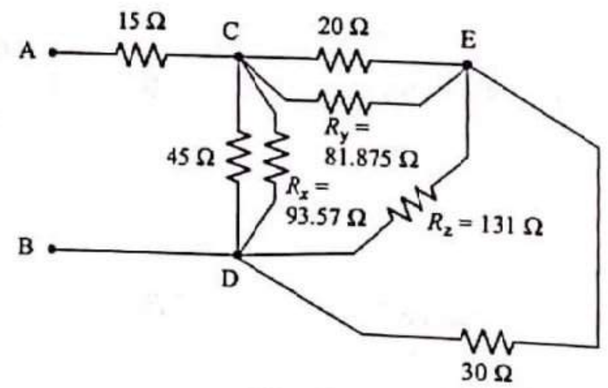

Fig. 12

$$R_x = 40 + 25 + \frac{40 \times 25}{35} = 93.57\ \Omega$$

$$R_y = 25 + 35 + \frac{25 \times 35}{40} = 81.875\ \Omega$$

$$R_z = 40 + 35 + \frac{40 \times 35}{25} = 131\ \Omega$$

In Fig. 12, we get three parallel combinations as

Across CD, $45\ \Omega \parallel 93.57\ \Omega = 30.39\ \Omega$

Across CE, $20\ \Omega \parallel 81.875\ \Omega = 16.074\ \Omega$

Across DE, $131\ \Omega \parallel 30\ \Omega = 24.41\ \Omega$

Replacing the parallel combinations by their equivalent resistor, we get the circuit as shown in Fig. 13.

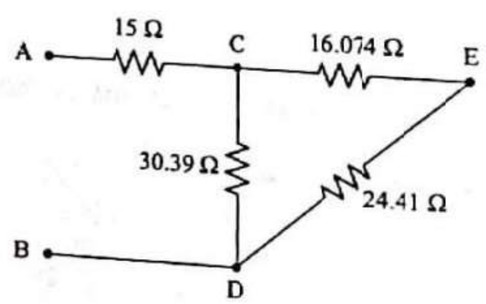

Fig. 13

In Fig. 13, 16.074 Ω and 24.41 Ω are in series.

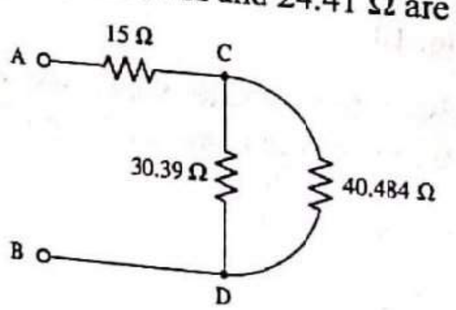

Fig. 14

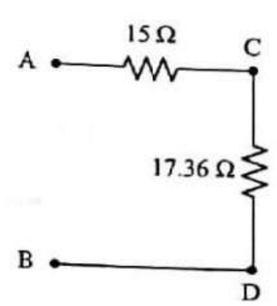

Fig. 15

So, $R_{AB} = 15\ \Omega + 17.36\ \Omega = 32.36\ \Omega$

(b) Given

$$i_1 = 10 \sin \omega t$$
$$i_2 = 20 \sin (\omega t + 60)$$
$$i_3 = 75 \sin (\omega t - 30)$$

Converting the standard sinusoidal forms into polar forms,

$$\bar{I}_1 = (7.071 \angle 0)\ \text{A}$$
$$\bar{I}_2 = (14.14 \angle 60)\ \text{A}$$
$$\bar{I}_3 = (53.03 \angle -30)\ \text{A}$$

The resultant current (I) is given as

$$\bar{I} = \bar{I}_1 + \bar{I}_2 + \bar{I}_3$$

So, $\bar{I} = (7.071 \angle 0) + (14.14 \angle 60) + (53.03 \angle -30)$

So, $\bar{I} = (7.071 + j\,0) + (7.07 + j\,12.25) + (45.93 - j\,26.52)$

So, $\bar{I} = (60.07 - j\,14.27)\ \text{A}$

So, $\bar{I} = (61.74 \angle -13.36)\ \text{A}$

Hence, the standard sinusoidal form of resultant current is given as:

$$i = 87.31 \sin (\omega t - 13.36)$$

(i) When frequency $f = 50$ Hz, the resultant current at $t = 0$ sec is given by

$$i = 87.31 \sin (\omega \times 0 - 13.36°)$$
$$i = -20.17\ \text{A}$$

(ii) When time $t = 0.001$ sec

$$i = 87.31 \sin (2\pi f t - 13.36)$$
$$i = 87.31 \sin (2\pi \times 50 \times 0.001 - 13.36°)$$
$$i = 87.31 \sin \left(2\pi \times 50 \times 0.001 \times \frac{180}{\pi} - 13.36\right)°$$
$$i = 87.31 \sin (4.64)°$$
$$i = 7.063\ \text{A}$$

(c) Given

$$S = 10\ \text{kVA}$$
$$\text{pf} = \cos \phi = 0.342$$

So, $\phi = 70°$

Now we know that,

$$S = \sqrt{3}\, V_L I_L\ \text{VA}$$

and $P = \sqrt{3}\, V_L I_L \cos \phi\ \text{W}$

i.e. $P = S \times \cos \phi\ \text{W}$

So, $P = 10 \times 0.342\ \text{kW}$

So, $P = 3.42\ \text{kW}$

In two wattmeter method, wattmeter readings are W_1 and W_2.

Total power, $P = W_1 + W_2$ (i)

So, $W_1 + W_2 = 3.42\ \text{kW}$

Case (i) when pf is leading

$$\phi = -70$$

So, $\phi = \tan^{-1} \left\{ \dfrac{\sqrt{3}\,(W_1 - W_2)}{W_1 + W_2} \right\}$

So, $\tan \phi = \left\{ \dfrac{\sqrt{3}\,(W_1 - W_2)}{W_1 + W_2} \right\}$

$$\tan(-70) = \frac{\sqrt{3}(W_1 - W_2)}{3.42}$$

So, $W_1 - W_2 = -5.425$ kW (ii)

From Eqs (i) and (ii)

$W_1 = -1$ kW

$W_2 = 4.425$ kW

Case (ii) when pf is lagging

$\phi = 70$

So, $$\phi = \tan^{-1}\left\{\frac{\sqrt{3}(W_1 - W_2)}{W_1 + W_2}\right\}$$

So, $$\tan\phi = \left\{\frac{\sqrt{3}(W_1 - W_2)}{W_1 + W_2}\right\}$$

So, $$\tan 70 = \frac{\sqrt{3}(W_1 - W_2)}{3.42}$$

$W_1 - W_2 = 5.42$ kW (iii)

Solving Eqs (i) and (ii) we get

$W_1 = 4.42$ kW

$W_2 = -1$ kW

(d) Refer to Section 5.11.2. (iii)

5. (a) Find the current through 60 Ω resistance by using Thevenin's theorem. 8

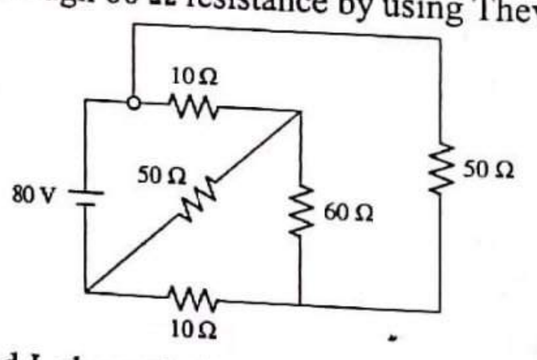

(b) Find current I_1 and I_2 shown in figure. 4

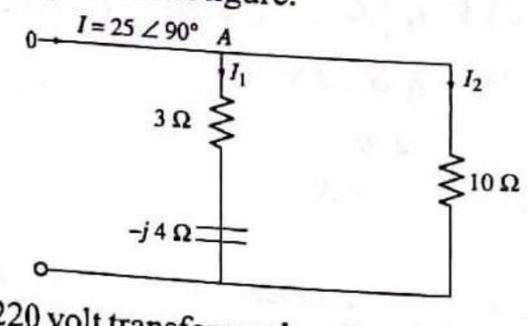

(c) A 50 kVA, 4400/220 volt transformer has $R_1 = 3.45\ \Omega$, $R_2 = 0.009\ \Omega$. The reactance are $X_1 = 5.2\ \Omega$ and $X_2 = 0.015\ \Omega$. Calculate for the transformer, 8

(i) Full load currents on Primary and Secondary side,

(ii) Equivalent resistance, reactances, impedances referred to primary side and secondary side, and

(iii) Total copper loss using individual resistances and equivalent resistances.

Solution

(a) Current through 60 Ω is required. This resistance can be called load resistance R_L. Its terminals A and B can be called load terminals.

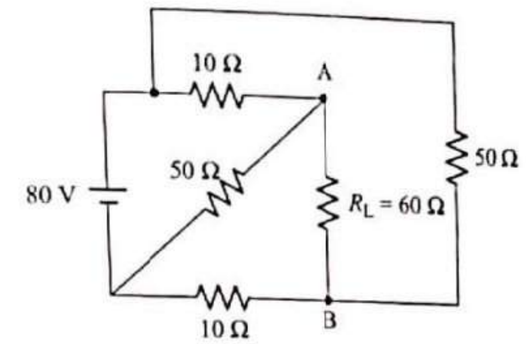

Fig. 16

Calculation of V_{TH}

Removing the load resistance from the network, we get the following modified network (Refer Fig. 17).

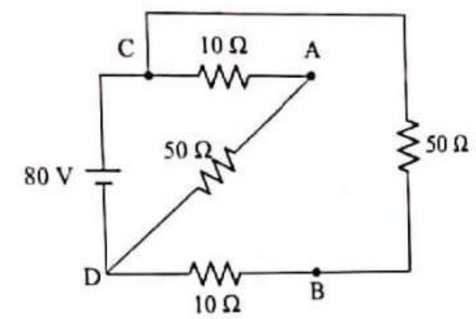

Fig. 17

Circuit shown in Fig. 17 can be simplified as

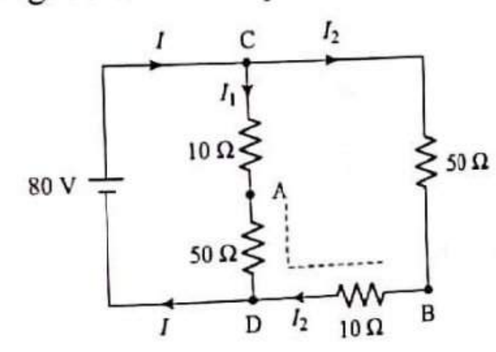

Fig. 18

For calculation of V_{TH}, i.e. V_{AB} the selected path from A to B is marked by dotted line in Fig. 18. In Fig. 18, as single source (18 V) is acting, the actual directions of currents are marked. The total current I divides at node C as I_1 and I_2. The two currents I_1 and I_2 meet at node C. So branch CAD is parallel with branch CBD. Two parallel branches are across C and D.

By Ohm's law, branch currents can be calculated as

$$I_1 = \frac{V_{CD}}{(10+50)} = \frac{80}{(10+50)} = 1.33\text{ A}$$

$$I_2 = \frac{V_{CD}}{(50+10)} = \frac{80}{(50+10)} = 1.33\text{ A}$$

Now Thevenin's voltage $V_{TH} = V_{AB}$

$= -10\,I_2 + 50\,I_1$

$= -10(1.33) + 50\,(1.33)$

$= 53.2$ volts

Calculation of R_{TH}

Removing the load resistance from the network and replacing the voltage source by short circuit as shown in Fig. 19, equivalent resistance across the load terminal A and B is called R_{TH}.

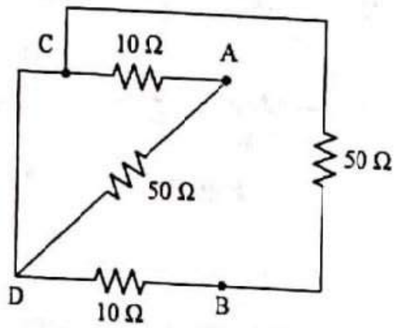

Fig. 19

Node C and Node D are the same nodes, by shorting them we get

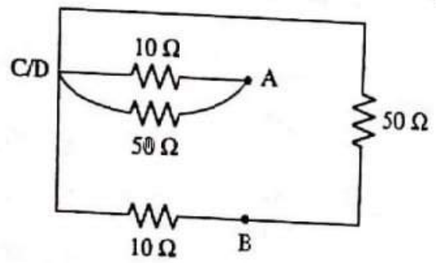

Fig. 20

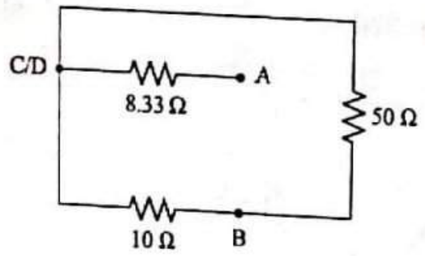

Fig. 21

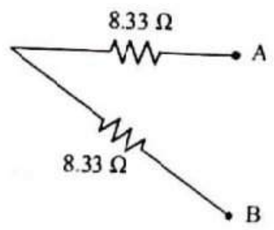

Fig. 22

In Fig. 21, across, CB, 10 Ω and 50 Ω are in parallel. So replacing parallel combination by equivalent resistor we get the circuit as shown in Fig. 22.

So, $R_{TH} = R_{AB} = 8.33 + 8.33 = 16.66\ \Omega$

Calculation of load current

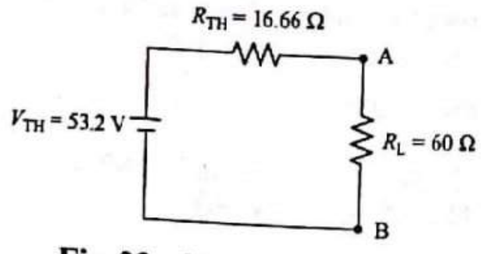

Fig. 23 Thevenin's circuit

From Fig. 23, load current is given as

$$I_{60\,\Omega} = \frac{V_{TH}}{R_{TH} + R_L} = \frac{53.2}{16.66 + 60} = 0.694\ \text{A}(\downarrow)$$

(b) Refer Example 2.72 (page no. 287).

(c) Given:

kVA rating = 50

$V_1 = E_1 = 4400$ volts $\qquad E_2 = 220$ V

$R_1 = 3.45\ \Omega \qquad R_2 = 0.009\ \Omega$

$X_1 = 5.2\ \Omega \qquad X_2 = 0.015\ \Omega$

(i) Full load primary current and secondary current

$$(I_1)_{FL} = \frac{\text{kVA Rating} \times 1000}{E_1} = \frac{50 \times 1000}{4400} = 11.36\ \text{A}$$

$$(I_2)_{FL} = \frac{\text{kVA Rating} \times 1000}{E_2} = \frac{50 \times 1000}{220} = 227.27\ \text{A}$$

(ii) Equivalent resistance as referred to both primary and secondary,

we require transformation ratio, $K = \dfrac{E_2}{E_1} = \dfrac{220}{4400} = 0.05$

Now, $\quad R_{01} = R_1 + R_2'$

$$= R_1 + \frac{R_2}{K^2}$$

$$= 3.45 + \frac{0.009}{(0.05)^2}$$

$$= 7.05\ \Omega$$

Now, $R_{02} = K^2 \times R_{01} = (0.05)^2 \times 7.05 = 0.017625\ \Omega$

Equivalent reactance as referred to both primary and secondary side

$$X_{01} = X_1 + X_2'$$

$$= X_1 + \frac{X_2}{K^2}$$

$$= 5.2 + \frac{0.015}{(0.05)^2}$$

$$= 11.2\ \Omega$$

Now, $X_{02} = K^2 \times X_{01}$

$$= (0.05)^2 \times 11.2$$

$$= 0.028\ \Omega$$

Equivalent impedance as referred to both primary and secondary side

$$Z_{01} = \sqrt{R_{01}^2 + X_{01}^2} = \sqrt{7.05^2 + 11.2^2} = 13.22\ \Omega$$

and $\quad Z_{02} = \sqrt{R_{02}^2 + X_{02}^2} = \sqrt{0.017625^2 + 0.028^2} = 0.0331\ \Omega$

(iii) Full-load copper loss using individual resistances can be calculated as

$$[W_{Cu}]_{FL} = (I_1)_{FL}^2 R_1 = (I_2)_{FL}^2 R_2$$

$$[W_{Cu}]_{FL} = (11.36)^2 \times 3.45 + (227.27)^2 \times 0.009$$

$$[W_{Cu}]_{FL} = 910.086\ \text{W}$$

Using equivalent resistances $[W_{Cu}]_{FL}$ can be calculated as

$$[W_{Cu}]_{FL} = (I_1)_{FL}^2 R_{01}$$

$$= (11.36)^2 \times 7.05$$
$$= 910 \text{ W}$$

or $$[W_{Cu}] = (I_2)^2_{FL} \times R_{02}$$
$$= (227.27)^2 \times 0.017625$$
$$= 910 \text{ W}$$

6. (a) Find the current through 6 Ω resistor using superposition theorem. 7

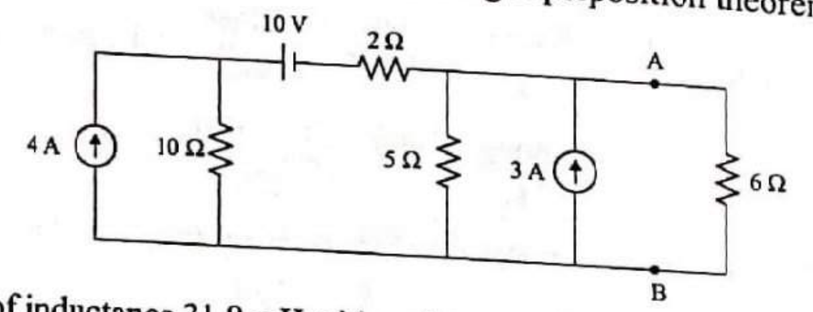

(b) A coil of inductance 31.8 mH with resistance of 12 Ω is connected in parallel with a capacitor across 250 volts, 50 Hz supply. Determine the value of capacitance, if no reactive current is taken from the supply. 7

(c) Explain Measurement of three phase power using two wattmeter method. 6

Solution

(a) **Step I:** Considering 4 A source acting alone, replacing 10 V source by short circuit and 3 A source by open circuit.

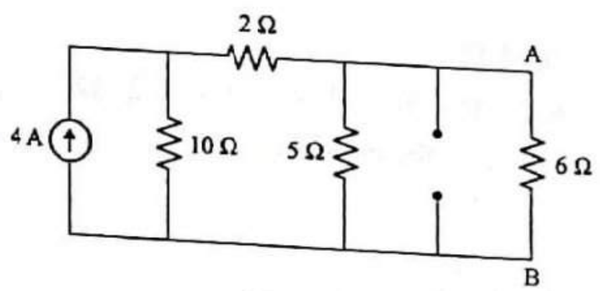

Fig. 24

Converting parallel combination of 4 A and resistor of 10 Ω into equivalent series combination of voltage source and resistor, we get

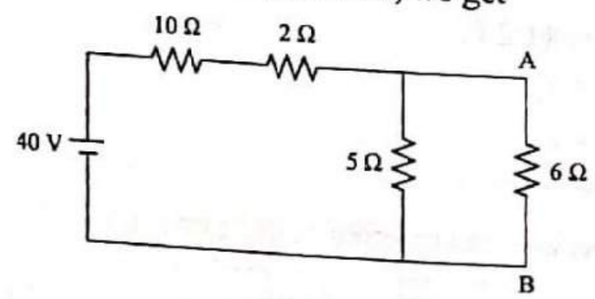

Fig. 25

10 Ω and 2 Ω resistances are in series

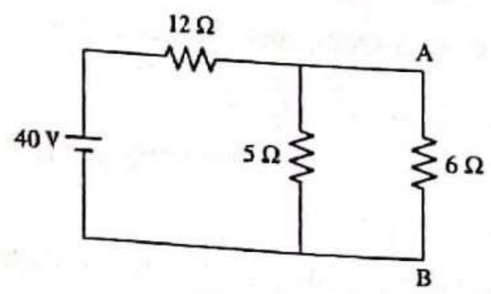

Fig. 26

Converting series combination of 40 V and 12 Ω into equivalent parallel combination of current source and resistor we get

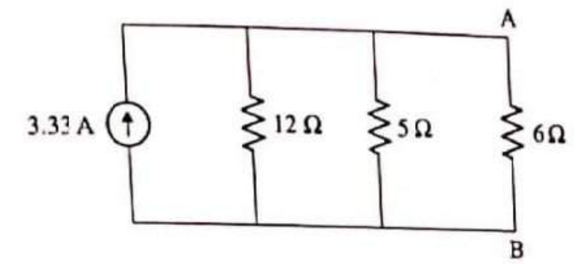

Fig. 27

12 Ω and 5 Ω are in parallel

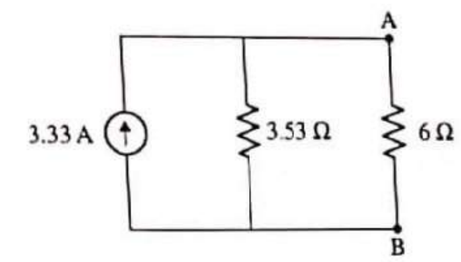

Fig. 28

By current division rule, we get

$$I_{6\,\Omega} = 3.33 \times \frac{3.53}{3.53 + 6} \ (\downarrow)$$

$$I_{6\,\Omega} = 1.233 \text{ A } (\downarrow)$$

Step II: Considering 10 V source acting alone, replacing 4 A and 3 A sources by open circuits.

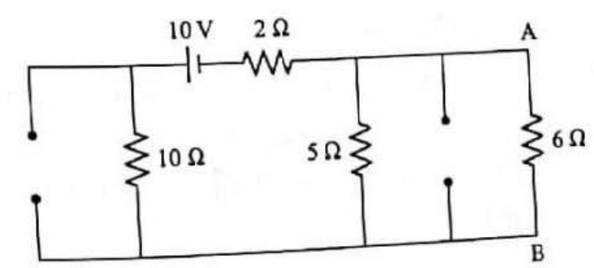

Fig. 29

The simplified circuit is shown in Fig. 30.

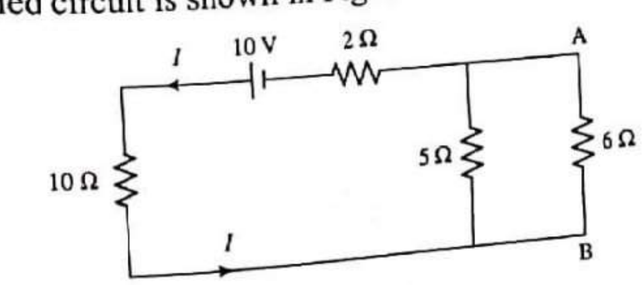

Fig. 30

Let the current delivered by the 10 V battery be I A. By Ohm's law,

$$I = \frac{10}{10 + (5 \parallel 6) + 2} = \frac{10}{14.73} = 0.679 \text{ A}$$

From Fig. 30, total current I divides into two parallel resistors 5 Ω and 6 Ω.

So, by current division rule,

$$I_{6\Omega} = 0.679 \times \frac{5}{5+6}$$

$$I_{6\Omega} = 0.3086 \text{ A } (\uparrow)$$

Step III: Considering 3 A source acting alone, replacing 4 A source by open circuit and 10 V source by short circuit, we get the circuit shown in Fig. 31.

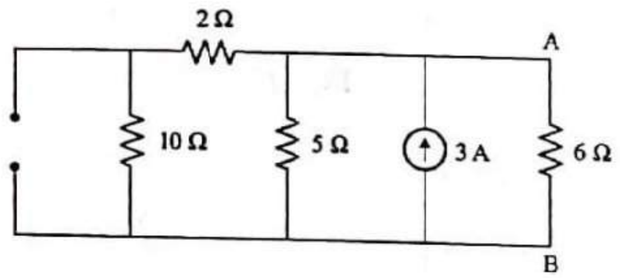

Fig. 31

10 Ω and 2 Ω are in series, replacing by equivalent resistance.

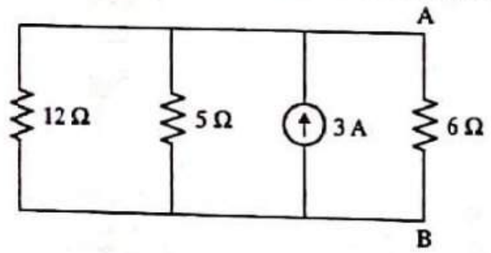

Fig. 32

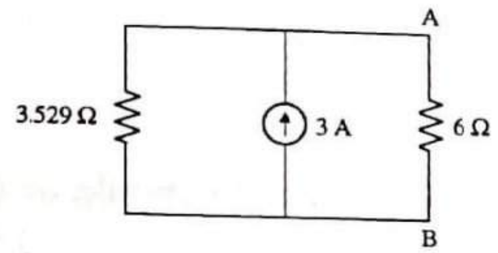

Fig. 33

Applying current division rule, we get

$$I_{6\Omega} = 3 \times \frac{3.529}{3.529+6} = 1.11 \text{ A } (\downarrow)$$

Step IV: By principle of superposition, the resultant current through 6 Ω resistor is algebraic sum of currents due to individual sources acting alone.

Hence, $I_{6\Omega} = 1.233 \text{ A}(\downarrow) + 0.3086 \text{ A } (\uparrow) + 1.11 \text{ A}(\downarrow)$

$I_{6\Omega} = 2.034 \text{ A } (\downarrow)$

(b) The conditions in the example are shown in Fig. 34.

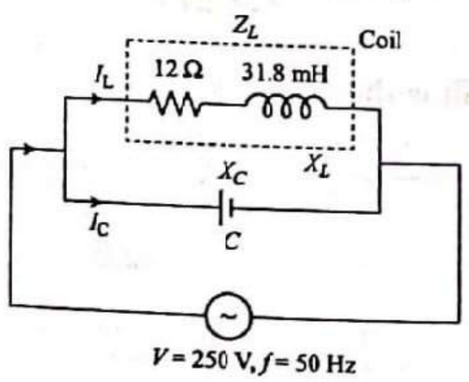

Fig. 34

We, need value of C, so that no reactive current is taken from the supply. In other words, parallel resonance occurs at $f = 50$ Hz.

⇒ Impedance of the coil, $Z_L = \sqrt{R^2 + X_L^2} = \sqrt{R^2 + (2\pi f_r L)^2}$

$$Z_L = \sqrt{(12)^2 + \left(2\pi \times 50 \times 31.8 \times 10^{-3}\right)^2} = \sqrt{(12)^2 + (10)^2}$$

$$Z_L = 15.62\ \Omega$$

⇒ Power factor of the coil,

$$(\text{pf})_{\text{coil}} = \cos\phi_L = \frac{R}{Z_L} = \frac{12}{15.62} = 0.7682 \text{ lagging}$$

So, $\phi_L = \cos^{-1} 0.7682 = 39.8°$

⇒ Current through coil,

$$I_L = \frac{V}{Z_L} = \frac{250}{15.62} = 16 \text{ A}$$

⇒ At Resonance

$$I_C = I_L \sin\phi_L$$

$$I_C = 16 \times \sin 39.8$$

$$I_C = 10.24 \text{ A}$$

Now, $X_C = \dfrac{V}{I_C} = \dfrac{250}{10.24} = 24.41\ \Omega$

So, $\dfrac{1}{2\pi f_r C} = 24.41$

or, $\dfrac{1}{2\pi \times 50 \times C} = 24.41$

So, $C = 130.4 \times 10^{-6}$ F

or $C = 130.4\ \mu$f.

December 2014

Time: 3 Hours

[Total Marks : 80]

N.B.: (1) Question No. 1 is compulsory.
(2) Solve any three questions from remaining questions.
(3) Figure to the right indicate full marks.
(4) Assume suitable data if necessary.

1. (a) Convert the given circuit into a single current source in parallel with a single resistance between points A and B. **3**

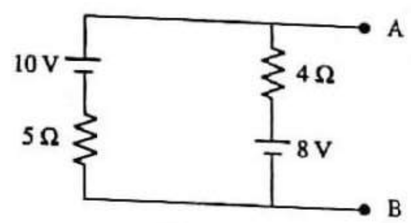

(b) Find voltage V_{AB} using super position theorem. **3**

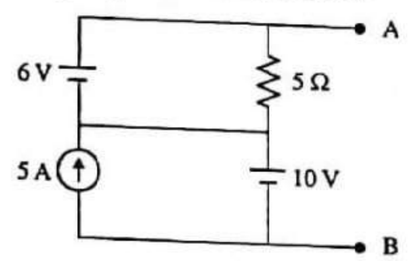

(c) Find the average value of the following waveform. **3**

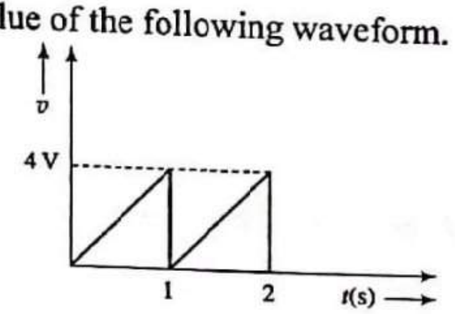

(d) For a series RLC circuit having $R = 10\ \Omega$, L = 0.01 H and $C = 100\ \mu F$, find the resonant frequency, quality factor, and bandwidth. **3**

(e) Draw the phasor diagram for 3-phase star connected load with a leading power factor. Indicate line and phase voltages and currents. **2**

(f) A 5 kVA, 240/2400 V, 50 Hz single phase transformer has the maximum value of flux density as 1.2 Tesla. If the e.m.f. per turn is 8 V, calculate the number of primary and secondary turns and the primary and secondary current at full load. **4**

(g) Draw the circuit diagram and the input and output waveforms for a full wave bridge rectifier. **2**

Solution

(a) Converting series combination of voltage source of 10 V and resistor of 5 Ω into equivalent parallel combination of current source and resistor, we get the circuit as shown in Fig. 1.

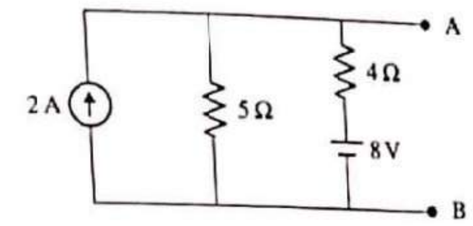

Fig. 1

Converting series combination of voltage source of 8 V and resistor 4 Ω into equivalent parallel combination of current source and resistor, we get

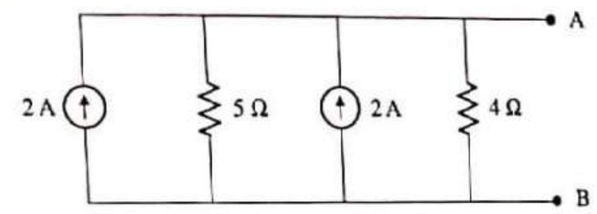

Fig. 2

In Fig. 2, all elements are in parallel. Adding the parallel current sources and replacing the parallel resistors 5 Ω and 4 Ω by their equivalent resistance we get the required circuit as shown in Fig. 3.

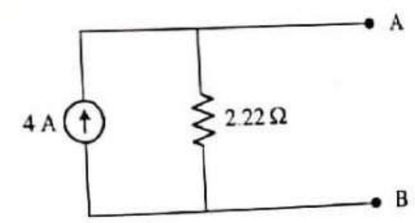

Fig. 3

(b) **Step I:** Considering 6 V source acting alone, replacing 5 A source by open circuit and 10 V source by short circuit, we obtain Fig. 4.

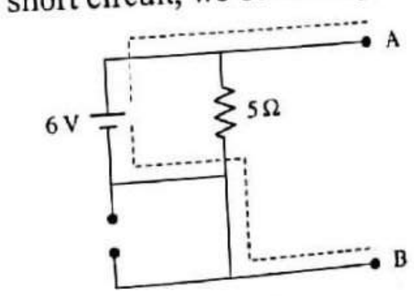

Fig. 4

For calculation of V_{AB} the selected path from B to A is marked by a dotted line. This path contains only 6 V source.

So, $V'_{AB} = 6$ V

Step II: Considering 10 V source acting alone, replacing 6 V source by short circuit and 5 A source by open circuit, we get the circuit as shown in Fig. 5.

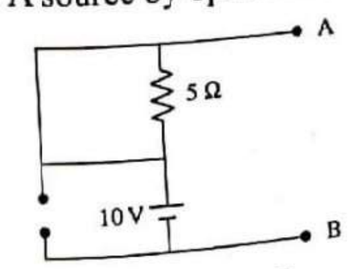

Fig. 5

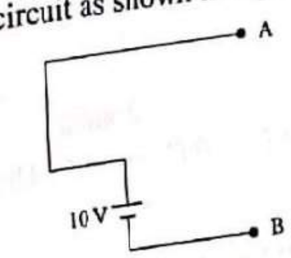

Fig. 6

In Fig. 5, 5 Ω resistor gets short circuited. For simplification 5 Ω resistor can be removed. So we get the circuit as shown in Fig. 6.

From Fig. 6, $V''_{AB} = 10\text{V}$

Step III: Considering 5 A source acting alone, replacing 6 V source and 10 V source by short circuit, we get the following circuit.

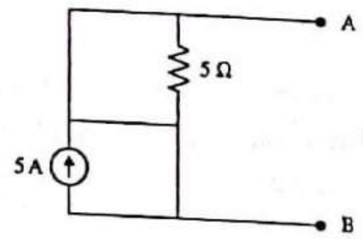

Fig. 7

From Fig. 7, $V'''_{AB} = 0\text{ V}$

Step IV: According to superposition theorem,

$V_{AB} = V'_{AB} + V''_{AB} + V'''_{AB}$

$V_{AB} = 6 + 10 + 0$

$V_{AB} = 16\text{ V}$

(c) As the given waveform is unsymmetrical, for average value, we have to consider full cycle.

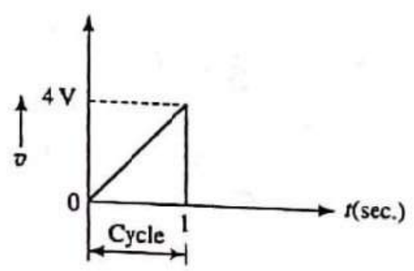

Fig. 8

In interval $0 < t < 1$, voltage increases with constant slope of 4 V/sec. Therefore, the equation of voltage is $v = 4t$

$$\text{So, } V_{\text{average}} = \frac{\int_0^1 v\,dt}{1}$$

$$= \int_0^1 v\,dt$$

$$= \int_0^1 4t\,dt$$

$$= 4\left[\frac{t^2}{2}\right]_0^1$$

$$= 4\left[\frac{1^2}{2} - \frac{0^2}{2}\right]$$

$$= 2 \text{ volts}$$

(d) Given $R = 10\ \Omega$, $L = 0.01$ H, and $C = 100 \times 10^{-6}$ F

Now,

⇒ Resonant frequency, $f_r = \dfrac{1}{2\pi\sqrt{LC}}$

$$f_r = \frac{1}{2\pi\sqrt{0.01 \times 100 \times 10^{-6}}}$$

$$f_r = 159.15 \text{ Hz}$$

⇒ Quality factor, $Q = \dfrac{1}{R}\sqrt{\dfrac{L}{C}}$

So, $Q = \dfrac{1}{10}\sqrt{\dfrac{0.01}{100 \times 10^{-6}}}$

So, $Q = 1$

⇒ Bandwidth, $BW = \dfrac{R}{2\pi L}$ Hz

$$BW = \frac{10}{2\pi \times 0.01}$$

$$BW = 159.15 \text{ Hz}$$

or Bandwidth, $BW = \dfrac{R}{L}$ rad/sec

$$BW = \frac{10}{0.01} = 1000 \text{ rad/sec.}$$

(f) Given

kVA Rating = 5, $E_1 = 240$ volts, $E_2 = 2400$ volts, $B_{max} = 1.2$ Tesla, emf/turn = 8 volts

We know that,

$$B_{max} = \frac{\phi_m}{a}$$

where a is the cross sectional area of magnetic core

So, $\phi_m = B_{max} \times a$

Now, emf equation of transformer is given as

$$E_1 = 4.44\, f N_1\, \phi_m \text{ volts}$$

So, $E_1 = 4.44\, f\, N_1\, (B_{max} \times a)$ volts

$$\frac{E_1}{N_1} = 4.44\, f\, (B_{max} \times a)$$

The ratio $\dfrac{E_1}{N_1}$ gives the value of emf/turn, i.e., 8 volts

So, $8 = 4.44 \times 50 \times (1.2 \times a)$

So, $a = 0.03\text{ m}^2$

Now, $\phi_m = B_{max} \times a$

So, $\phi_m = 1.2 \times 0.03 = 0.036$ Wb

Now, writing the emf equation of transformer

$$E_1 = 4.44\, f\, N_1\, \phi_m$$

So, $N_1 = \dfrac{E_1}{4.44\, f\, \phi_m} = \dfrac{240}{4.44 \times 50 \times 0.036} = 30$ turns

Similarly, we have

$$E_2 = 4.44\, f\, N_2\, \phi_m$$

So, $$N_2 = \frac{E_2}{4.44\, f\, \phi_m} = \frac{2400}{4.44 \times 50 \times 0.036} = 300 \text{ turns}$$

Primary full load current $(I_1)_{FL}$ is given as

$$(I_1)_{FL} = \frac{\text{kVA Rating} \times 1000}{E_1} = \frac{5 \times 1000}{240} = 20.83 \text{ A}$$

Secondary full load current $(I_2)_{FL}$ is given as

$$(I_2)_{FL} = \frac{\text{kVA Rating} \times 1000}{E_2} = \frac{5 \times 1000}{2400} = 2.083 \text{ A}$$

(g) Refer to Section 5.11.2.

2. (a) Find the current through 4 Ω resistance using Nodal analysis. **6**

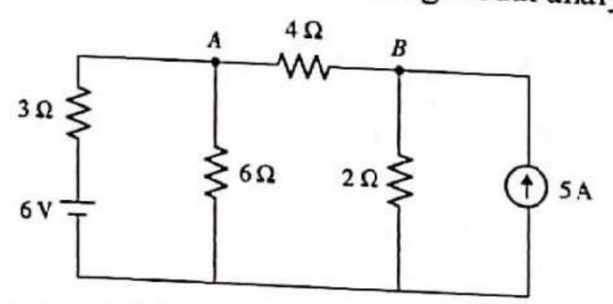

(b) Two coils are connected in series across a 200 V, 50 Hz ac supply. The power input to the circuit is 2 kW and 1.15 kVAR. If the resistance and the reactance of the first coil are 5 Ω and 8 Ω respectively, calculate the resistance and reactance of the second coil. Calculate the active power and reactive power for both the coils individually. **8**

(c) Explain the principle of working for a single phase transformer and derive the e.m.f. equation for the same. **6**

Solution

(a) Marking the different nodes and assigning the unknown currents, we get the circuit as shown in Fig. 9.

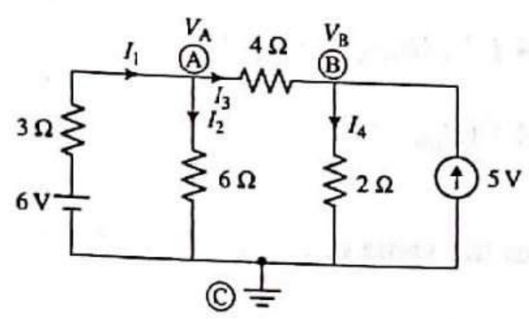

Fig. 9

Applying KCL at node A, we get

$$I_1 = I_2 + I_3$$

or $$\frac{6 - V_A}{3} = \frac{V_A - 0}{6} + \frac{V_A - V_B}{4}$$

or $$\frac{6 - V_A}{3} = \frac{4V_A + 6V_A - 6V_B}{24}$$

So $18V_A - 6V_B = 48$ (i)

Applying KCL at node B, we get

$$I_3 + 5 = I_4$$

or $$\frac{V_A - V_B}{4} + 5 = \frac{V_B - 0}{2}$$

or $$\frac{V_A - V_B + 20}{4} = \frac{V_B - 0}{2}$$

So, $V_A - 3V_B = -20$ (ii)

Solving Eqs (i) and (ii), we get

$$V_A = 5.50 \text{ volts}$$

and $$V_B = 8.5 \text{ volts}$$

Now,

$$I_{4\,\Omega} = \frac{V_A - V_B}{4} \text{ A } (\rightarrow)$$

or $$I_{4\,\Omega} = \frac{V_B - V_A}{4} \text{ A } (\leftarrow)$$

So, $$I_{4\,\Omega} = \frac{8.5 - 5.5}{4} \text{ A } (\leftarrow)$$

$$I_{4\,\Omega} = 0.75 \text{ A } (\leftarrow)$$

(b) The conditions of the example are shown in Fig. 10.

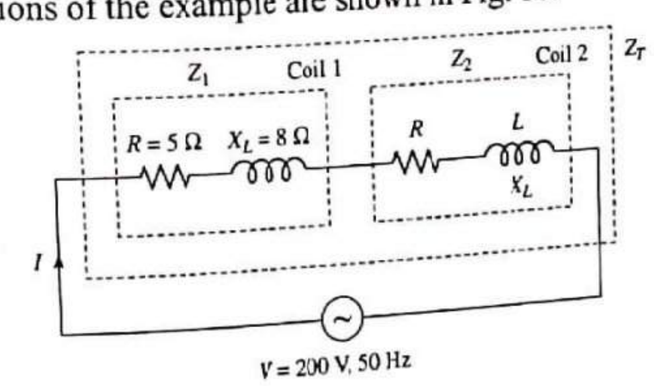

Fig. 10

Let the circuit current be I A.

The power input to the circuit is 2 kW and 1.15 kVAR.

i.e. Active power, $P = 2$ kW $= 2000$ W

and, Reactive power, $Q = 1.15$ kVAR $= 1150$ VAR

We know that,

$P = VI \cos \phi$ and $Q = VI \sin \phi$

So, $$\tan \phi = \frac{Q}{P}$$

So, $$\phi = \tan^{-1} \frac{Q}{P}$$

$$\phi = \tan^{-1} \frac{1150}{2000}$$

$\phi = 29.89$

Now, $P = VI\cos\phi$

So, $$I = \frac{P}{V\cos\phi} = \frac{2000}{200 \times \cos 29.89} = 11.53 \text{ A}$$

Let the impedance of coil 1 be Z_1 and impedance of coil 2 be Z_2. The total impedance of the circuit is Z_T.

So, $\overline{Z}_T = \overline{Z}_1 + \overline{Z}_2$

and $$Z_T = \frac{V}{I} = \frac{200}{11.53} = 17.35\ \Omega$$

So, Polar form of Z_T is given as

$\overline{Z}_T = (17.35 \angle 29.89)\ \Omega$

Now,

$\overline{Z}_T = \overline{Z}_1 + \overline{Z}_2$

So, $\overline{Z}_2 = \overline{Z}_T - \overline{Z}_1$

$\overline{Z}_2 = (17.35 \angle 29.89) - (5 + j8)$

$\overline{Z}_2 = (15.04 + j8.65) - (5 + j8)$

$\overline{Z}_2 = (10.04 + j0.65)\ \Omega$

Thus, Resistance of coil 2, $R = 10.04\ \Omega$

and Reactance of coil 2, $X_L = 0.65\ \Omega$

Now, Active power consumed by coil 1,

$P_{\text{coil 1}} = I^2 \times R = 11.53^2 \times 5 = 664.7$ W

Reactive power of coil 1,

$Q_{\text{coil 1}} = I^2 \times X_L = 11.53^2 \times 8 = 1063.53$ VAR

Similarly, Active power and reactive power of coil 2 are given as

$P_{\text{coil 2}} = I^2 \times R = 11.53^2 \times 10.04 = 1334.73$ W

$Q_{\text{coil 2}} = I^2 \times X_L = 11.53^2 \times 0.65 = 86.41$ VAR

(c) Refer to Sections 4.2 and 4.4.

3. (a) A balanced 3-phase load consists of 3 coils, each of resistance 4 Ω and inductance 0.02 H. It is connected to a 440 V, 50 Hz, 3ϕ supply. Find the total power consumed when the load is connected in star and the total reactive power when the load is connected in delta. **8**

(b) With the help of a neat diagram explain how open circuit test is conducted on a single phase transformer. **6**

(c) Draw the circuit diagram of a half wave rectifier with capacitor filter and the corresponding input and output waveforms for the same. **2**

(d) With the help of a neat diagram explain the input characteristics of an NPN transistor in the common emitter configuration. **4**

Solution

(a) **Star connection:**

When three similar coils are connected in star, we get a three-phase, Y-connected balanced load as shown in Fig. 11.

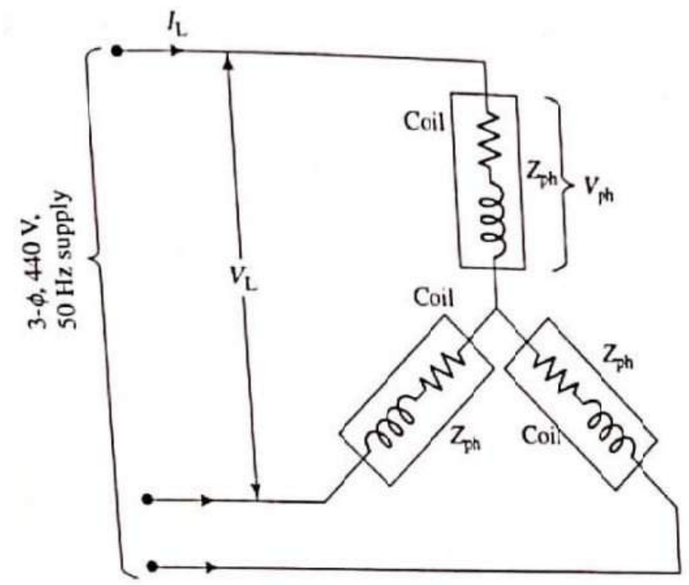

3-ϕ, Y-connected balanced load

Fig. 11

Let the impedance of each coil be Z_{ph}.

Z_{ph} can be calculated as follows:

Resistance of each coil, $R = 4\ \Omega$

Inductance of each coil, $L = 0.02$ H

Reactance of each coil, $X_L = 2\pi f L = 2\pi \times 50 \times 0.02 = 6.28\ \Omega$

So, Rectangular form of Z_{ph}, $\overline{Z}_{ph} = (4 + j6.28)\ \Omega$

and Polar form of Z_{ph}, $\overline{Z}_{ph} = (7.45 \angle 57.51)\ \Omega$

From polar form of Z_{ph}, $Z_{ph} = 7.45\ \Omega$ and $\phi = 57.51°$

Phase voltage, $$V_{ph} = \frac{V_L}{\sqrt{3}} = \frac{440}{\sqrt{3}} = 254.03 \text{ volts}$$

Phase current, $$I_{ph} = \frac{V_{ph}}{Z_{ph}} = \frac{254.03}{7.45} = 34.1 \text{ A}$$

In Y-connection, $I_L = I_{ph}$

So, $I_L = 34.1$ A

Total power consumed, $P = \sqrt{3}\, V_L I_L \cos\phi$

$= \sqrt{3} \times 440 \times 34.1 \times \cos 57.51$

$= 13959.35$ W $= 13.96$ kW

Delta connection:

When the load is connected in Delta (as shown in Fig. 11) we need to calculate reactive power Q.

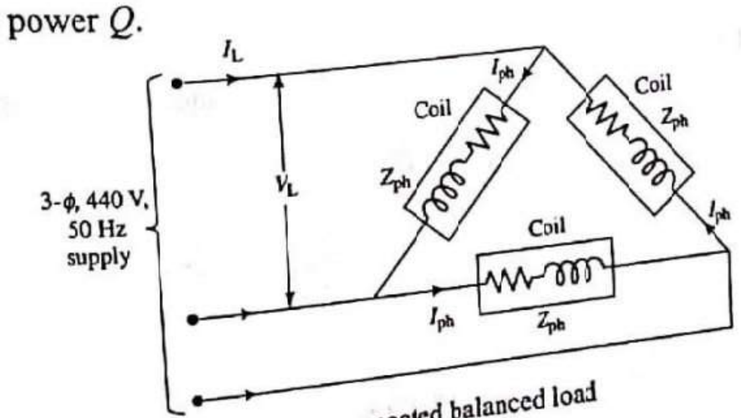

3-ϕ, delta-connected balanced load

Fig. 12

As the same three coils are connected in delta, Z_{ph}, is same.

So, $\overline{Z}_{ph} = (7.45 \angle 57.51)\ \Omega$

In delta-connection, $V_L = V_{ph} = 440$ volts

Phase current, $I_{ph} = \dfrac{V_{ph}}{Z_{ph}} = \dfrac{440}{7.45} = 59.06$ A

Line current, $I_L = \sqrt{3}\, I_{ph} = \sqrt{3} \times 59.06 = 102.29$ A

Total reactive power, $Q = \sqrt{3}\, V_L I_L \sin\phi$

$= \sqrt{3} \times 440 \times 102.29 \times \sin 57.51$

$= 65754.26$ VAR

$= 65.75$ kVAR

(b) Refer to Section 4.13.1.

(c) Refer to Section 5.12.1.

(d) Refer to Section 5.10.9.

4. (a) Using source transformation find the current flowing through the 10 Ω resistance. **7**

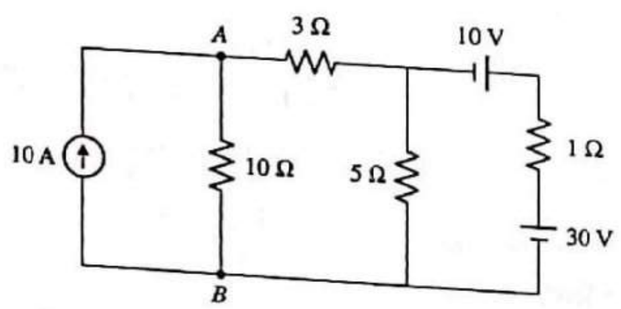

(b) Find the r.m.s. value for the given waveform. **5**

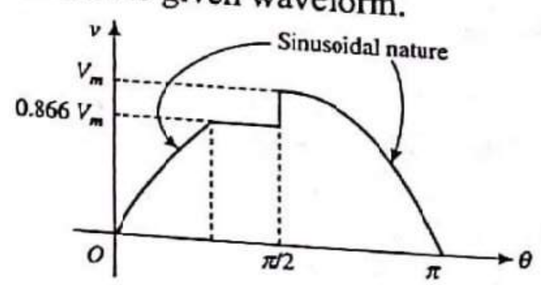

(c) Two wattmeters are used to measure power in a 3ϕ balanced star connected load using the two wattmeter method. The readings of the 2 wattmeters are 8 kW and 4kW respectively. Calculate the total power consumed by the 3ϕ load and the power factor. **4**

(d) With the help of a neat circuit diagram and input and output waveforms explain the working of a fullwave centre tapped rectifier. **4**

Solution

(a) By adding the series voltage sources (i.e. 10 V and 30 V) we get the following circuit.

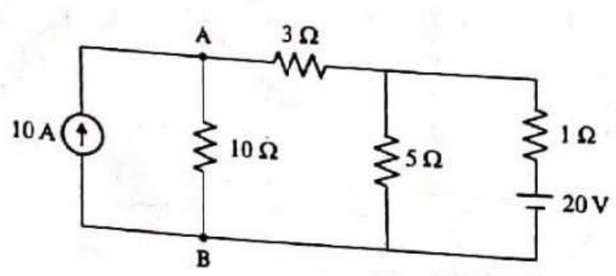

Fig. 13

Converting the series combination of 20 V and resistor 1 Ω into equivalent parallel combination of current source and resistor, we get the following circuit.

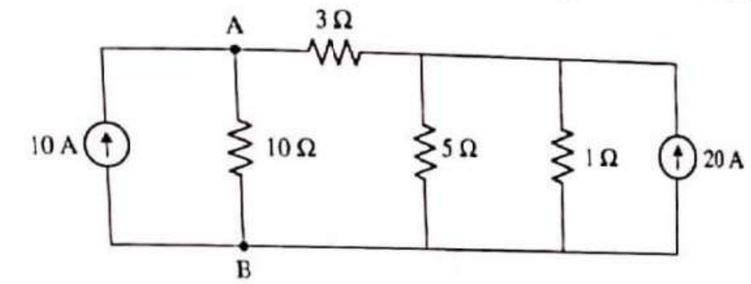

Fig. 14

5 Ω and 1 Ω are in parallel, so 5 Ω || 1 Ω = 0.833 Ω

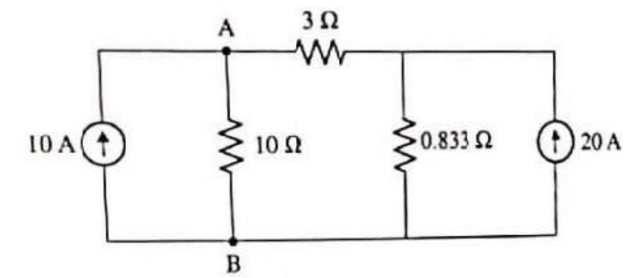

Fig. 15

In Fig. 15, current source 20 A and resistor 0.833 Ω are in parallel. Converting this parallel combination into equivalent series combination of voltage source and resistor we get the circuit as shown in Fig. 16.

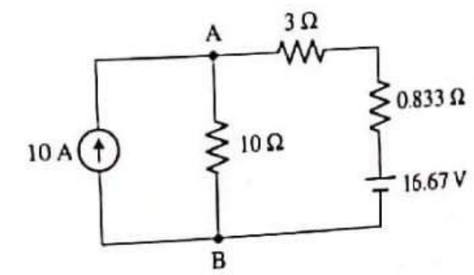

Fig. 16

By adding the series resistances we get

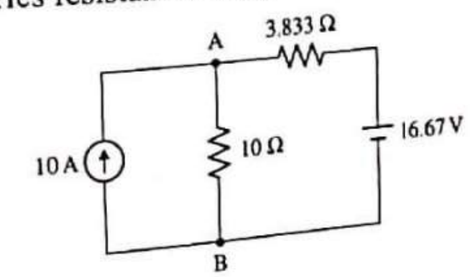

Fig. 17

Converting series combination of voltage source 16.67 V and resistor of 3.833 Ω into equivalent parallel combination of current source and resistor, we get the circuit as shown in Fig. 18.

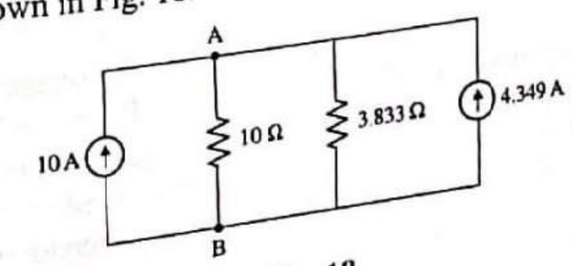

Fig. 18

Adding the parallel current sources, we get the following circuit.

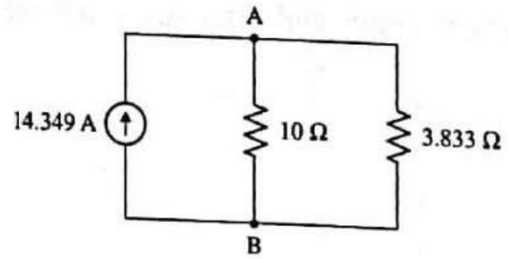

Fig. 19

By current division rule,

$$I_{10\,\Omega} = \frac{14.349 \times 3.833}{10 + 3.833}$$

$$I_{10\,\Omega} = 3.97\text{ A}(\downarrow)$$

(b) Refer to Example 2.12 (page no. 191).

(c) We have $W_1 = 4$ kW and $W_2 = 8$ kW

So, total power, $P = W_1 + W_2 = 4 + 8 = 12$ kW

Phase angle, $\phi = \tan^{-1}\left\{\frac{\sqrt{3}\,(W_2 - W_1)}{W_1 + W_2}\right\}$

$$\phi = \tan^{-1}\left\{\frac{\sqrt{3}\,(8-4)}{4+8}\right\}$$

$$\phi = 30$$

So, power factor $= \cos\phi = \cos 30 = 0.866$ lagging.

(d) Refer to Section 5.11.2.

5. (a) For the given circuit find the value of R_L for maximum power transfer and calculate the maximum power absorbed by R_L. **8**

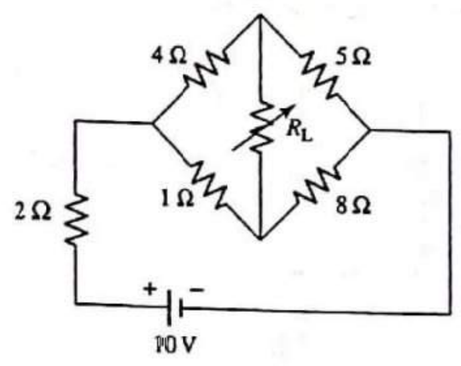

(b) The voltage and current in a circuit are given by $e = 100\sin(\omega t + 30°)$ and $i = 50\sin(\omega t + 60°)$. Determine the impedance of the circuit. Assuming the circuit to contain 2 elements in series, find resistance, reactance, and power factor of the circuit. **4**

(c) A 30 kVA, 2400/120 V, 50 Hz transformer has high-voltage winding resistance of 0.1 Ω and leakage reactance of 0.22 Ω. The low voltage winding resistance is 0.035 Ω and leakage reactance is 0.012 Ω. Calculate equivalent resistance as referred to primary and secondary, equivalent reactance as referred to primary and secondary, equivalent impedance as referred to primary and secondary. Copper loss at full load and at 75% of full load. **8**

Solution

(a) According to maximum power transfer theorem, maximum power will be transferred from the circuit to the load resistance R_L when R_L is made equal to R_{TH}, the thevenin's resistance at terminals A and B. Load terminals are marked as A and B.

Calculation of R_{TH}

Removing the load resistance from the network and replacing the voltage source by short circuit, we get the network as shown in Fig. 20. In Fig. 20, equivalent resistance across load terminals A and B is called Thevenin's resistance R_{TH}.

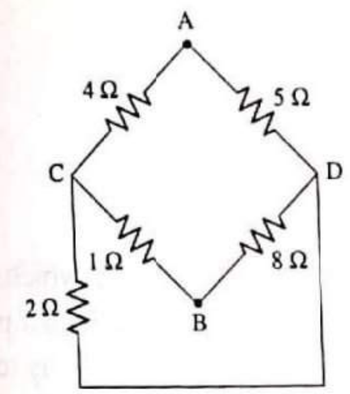

Fig. 20

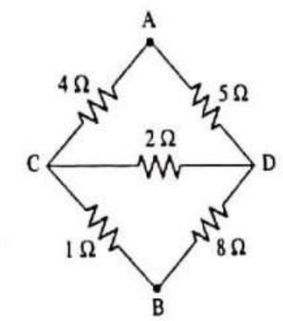

Fig. 21

For simplification, the circuit can be redrawn as shown in Fig. 21.

Converting the delta connection formed by 4 Ω, 5 Ω and 2 Ω, resistors ($\Delta\,CAD$) into equivalent star network, i.e. $\Delta CAD \Rightarrow Y\,CAD$, we obtain the modified network as shown in Fig. 22.

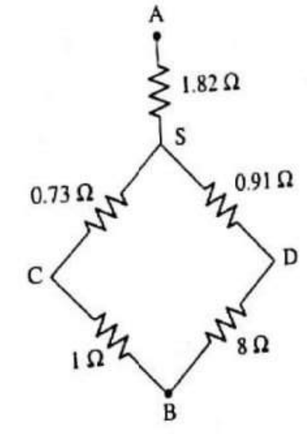

Fig. 22

By series parallel circuit reduction techniques, we get the following network.

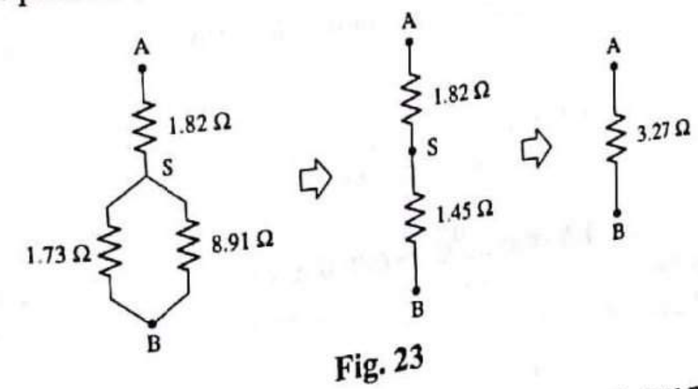

Fig. 23

Thus, $R_{TH} = R_{AB} = 3.27\ \Omega$. Hence when $R_L = 3.27\ \Omega$, maximum power is transferred to the circuit.

Calculation of V_{TH}

Removing the load resistance from the network, we get the following circuit:

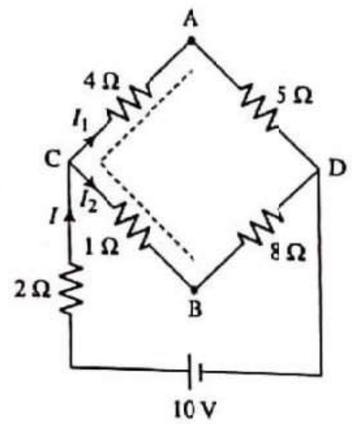

Fig. 24

In Fig. 24, voltage appears across the load terminals A and B, which is called Thevenin's voltage V_{TH}. For calculation of V_{TH}, i.e., V_{AB}, the selected path from A to B is marked by the dotted line in Fig. 24. As this path contains resistors 1 Ω and 4 Ω, currents through these resistances are required. In Fig. 24, the actual directions of currents are marked. The 10 V source produces the total current I A, which divides at node C. Let the current through branch CAD be I_1 and current through branch CBD be I_2. By using series-parallel circuit-reduction techriques, we get the circuits as shown in Fig. 25.

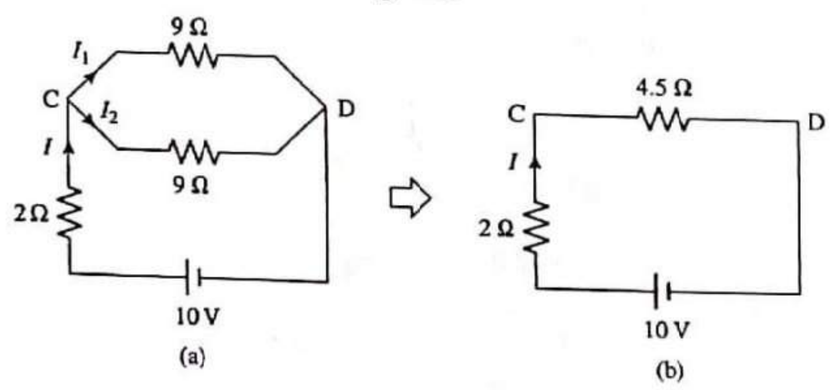

Fig. 25

From Fig. 25(a), the total circuit current,

$$I = \frac{10}{2+4.5} = 1.538 \text{ A}$$

In Fig. 25(a), the total circuit current divides at node C. By current division rule (CDR),

$$I_1 = 1.538 \times \frac{9}{9+9} = 0.769 \text{ A}$$

$$I_2 = 1.538 \times \frac{9}{9+9} = 0.769 \text{ A}$$

We now have, (from Fig. 24):

$$V_{TH} = (1 \times I_2) - (4 \times I_1)$$
$$V_{TH} = (1 \times 0.769) - (4 \times 0.769)$$
$$V_{TH} = -2.307 \text{ volts}$$

Hence, $P_{max} = \dfrac{V_{TH}^2}{4R_{TH}} = \dfrac{(2.307)^2}{4 \times 3.27} = 0.4069$ watts

(b) It is given that circuit contains 2 elements in series. So we have circuit as shown in Fig. 26.

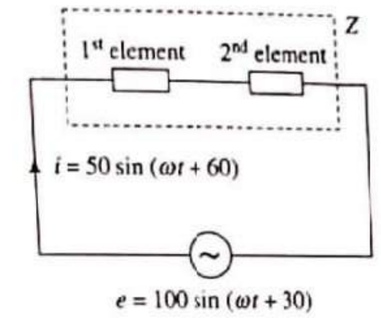

Fig. 26

Given

$$e = 100 \sin(\omega t + 30)$$

So, $\overline{E} = (70.17 \angle 30)$ V

$$i = 50 \sin(\omega t + 60)$$

So, $\overline{I} = (35.36 \angle 60)$ A

By Ohm's law, circuit impedance can be calculated as

$$\overline{Z} = \frac{\overline{E}}{\overline{I}} = \frac{(70.71 \angle 30)}{(35.36 \angle 60)} = (2 \angle -30)\ \Omega$$

or, $\overline{Z} = (1.732 - j1)\ \Omega$

From rectangular form of impedance, values of the circuit elements are:

$$R = 1.732\ \Omega, X_C = 1\ \Omega$$

Power factor of the circuit,

$$\text{pf} = \cos\phi = \cos(-30) = 0.866 \text{ leading}$$

(c) Refer to Example 4.8 on page no 385.

6. (a) Find the value of current flowing through the 5 Ω resistance using Superposition Theorem. 7

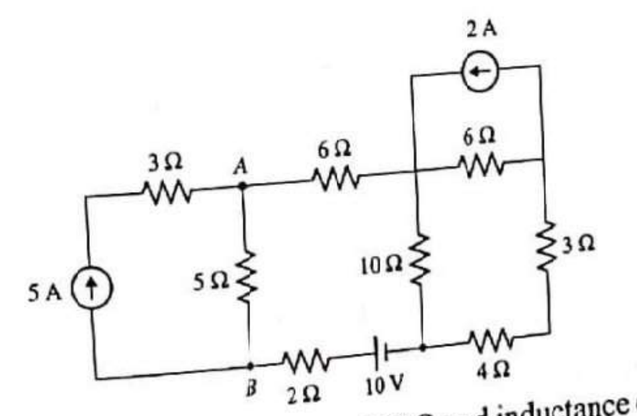

(b) An inductive coil having a resistance of 20 Ω and inductance of 0.2 H is connected in parallel with a 20 μF capacitor with variable frequency and 230 V supply. Find the frequency at which the total current drawn from supply is in phase with the supply voltage. Find the value of the current and the impedance of the circuit at this frequency. 7

(c) With the help of a neat circuit diagram and phasor diagram explain the 2-wattmeter method to measure power in a 3-phase balanced delta connected load. 6

Solution

(a) **Step I:** Considering 5 A source acting alone and replacing other sources with their internal resistances we get the following circuit.

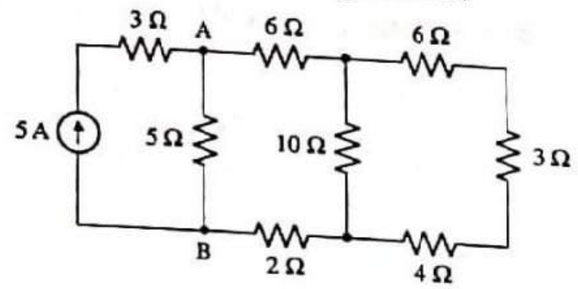

Fig. 27

6 Ω, 3 Ω and 4 Ω are in series. So, 6 Ω + 3 Ω + 4 Ω = 13 Ω

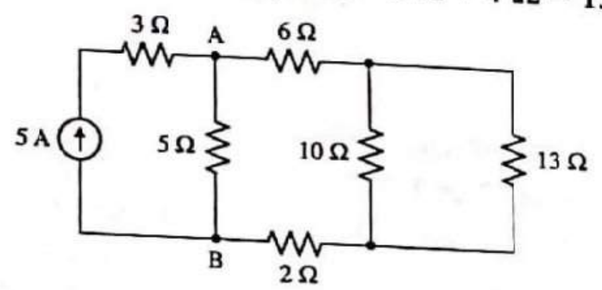

Fig. 28

In Fig. 28, 10 Ω and 13 Ω resistors are in parallel.

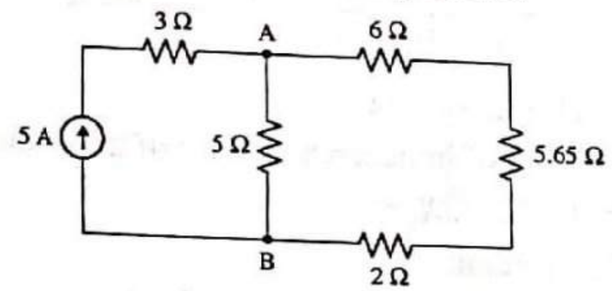

Fig. 29

In Fig. 29, the three resistors 6 Ω, 5.65 Ω, and 2 Ω are is series. By adding them we get:

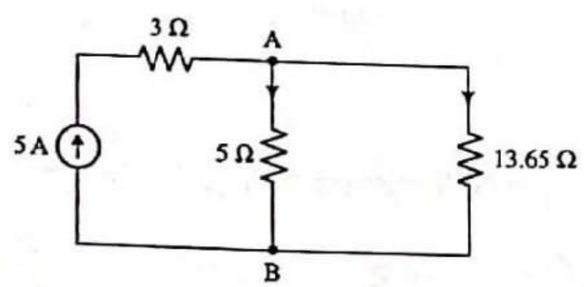

Fig. 30

From Fig. 30, by current division rule

$$I_{5\,\Omega} = \frac{5 \times 13.65}{5 + 13.65}$$

$$I_{5\,\Omega} = 3.66\ \text{A}(\downarrow)$$

Step II: Considering 10 V source acting alone and replacing other sources with their internal resistances we get the following circuit:

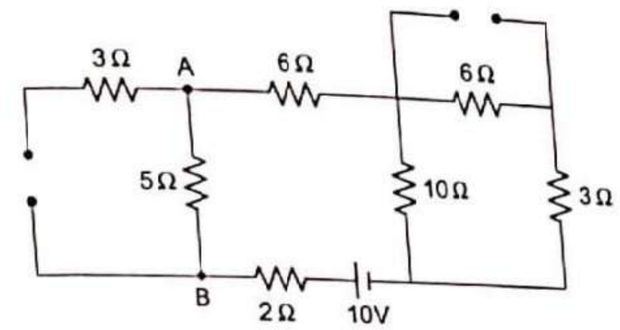

Fig. 31

The simplified circuit is shown in Fig. 32.

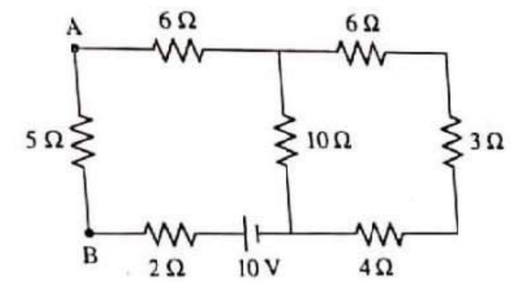

Fig. 32

In Fig. 32, 6 Ω, 3 Ω, and 4 Ω are in series. By adding them we get following circuit:

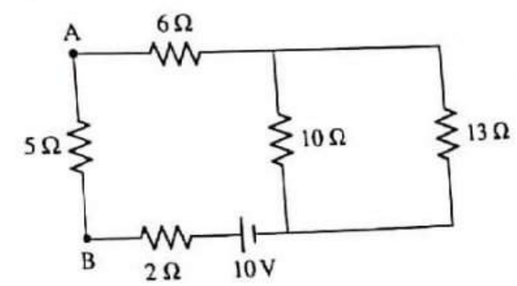

Fig. 33

In Fig. 33, 10 Ω and 13 Ω resistors are in parallel. Replacing the parallel combination by their equivalent resistor we get the circuit as shown in Fig. 34.

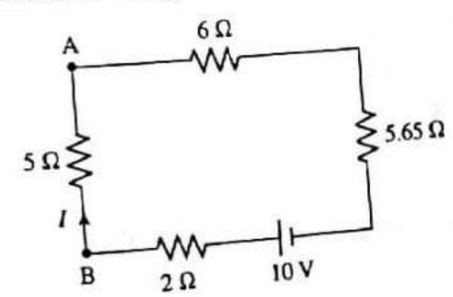

Fig. 34

By Ohm's Law,

$$I_{5\,\Omega} = \frac{10}{(2+5+6+5.65)} = 0.5361\ \text{A}(\uparrow)$$

Step III: Considering 2 A source acting alone and replacing 5 A source by open circuit and 10 V source by short circuit, we get the network as shown in Fig. 35.

In Fig. 35, 2 A current source and 6 Ω resistor are in parallel. Replacing this parallel combination by equivalent combination of series voltage source and resistor we get:

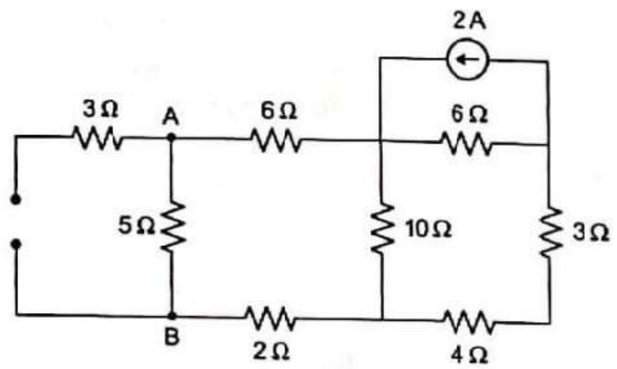

Fig. 35

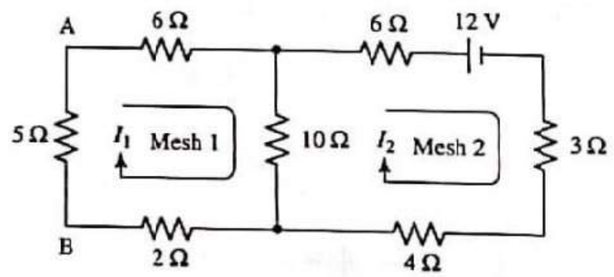

Fig. 36

By Mesh analysis,

Applying KVL to Mesh 1, we get

$-6I_1 - 10(I_1 - I_2) - 2I_1 - 5I_1 = 0$

$-23I_1 + 10I_2 = 0$ (i)

Applying KVL to Mesh 2, we get

$-6I_2 - 12 - 3I_2 - 4I_2 - 10(I_2 - I_1) = 0$

$10I_1 - 23I_2 = 12$ (ii)

From Eqs (i) and (ii),

$I_1 = -0.2797$ A

$I_2 = -0.6433$ A

So, $I_{5\Omega} = -0.2797$ A (↑)

or $I_{5\Omega} = 0.2797$ A (↓)

Step IV: By Superposition principle,

$I_{5\Omega} = 3.66$A (↓) + 0.5361 A(↑) + 0.2797 A(↓)

$I_{5\Omega} = 3.4036$ A (↓)

(b) The condition in the Example are shown in Fig. 37.

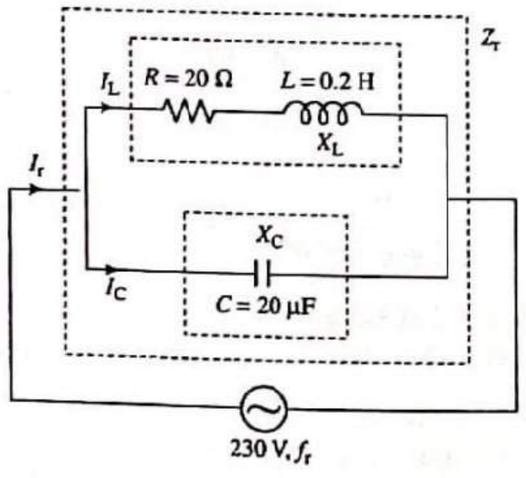

Fig. 37

At resonance total current drawn from the supply is in phase with the supply voltage.

Resonance frequency,

$$f_r = \frac{1}{2\pi}\sqrt{\frac{1}{LC} - \frac{R^2}{L^2}}\ H_Z$$

$$f_r = \frac{1}{2\pi}\sqrt{\frac{1}{0.2 \times 20 \times 10^{-6}} - \frac{20^2}{(0.2)^2}}$$

$$f_r = 77.96 \text{ Hz}$$

Dynamic impedance of the circuit,

$$Z_r = \frac{L}{CR} = \frac{0.2}{20 \times 10^{-6} \times 20} = 500\ \Omega$$

Circuit current at resonance,

$$I_r = \frac{V}{Z_r} = \frac{230}{500} = 0.46 \text{ A}$$

(c) Refer to the Section 3.6.2.

May 2015

(REVISED COURSE)

Time: 3 Hours

[Total Marks : 80]

N.B.: (1) Question No. 1 is compulsory.
(2) Attempt any three questions from the remaining five.
(3) Figures to the right side indicate full marks.
(4) Wherever not mentioned value of resistance is in ohms.
(5) Assume suitable data if necessary.

1. (a) Convert the star circuit into its equivalent delta circuit. **3**

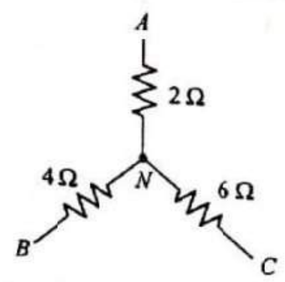

(b) For the given circuit find the Norton equivalent between points A and B. **3**

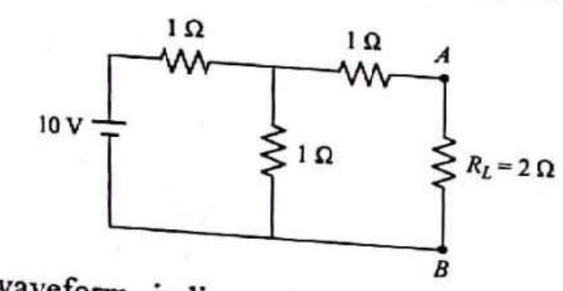

(c) Draw an a.c. waveform, indicate there on and explain (i) instantaneous value, (ii) peak value and (iii) time period for one cycle of the alternating quantity. **3**

(d) Differentiate betweem series and parallel resonance with respect to **3**
(i) Impedance at resonance
(ii) Current at resonance
(iii) Magnification factor

(e) Draw the phasor diagram for 3 phase delta connected load with a lagging power factor. Indicate line and phase voltage and currents. **2**

(f) Derive the emf equation for a single phase transformer. **4**

(g) Draw a neat circuit diagram for a full wave bridge rectifier using 4 diodes and the corresponding input and output waveforms for voltage. **2**

Solution

(a) Converting the given star connection (Y ABC) into equivalent delta connection (Δ ABC), we get the following circuit.

The values of the Δ-connection resistors are given as

$$R_x = 2 + 4 + \frac{2 \times 4}{6} = 7.33\ \Omega$$

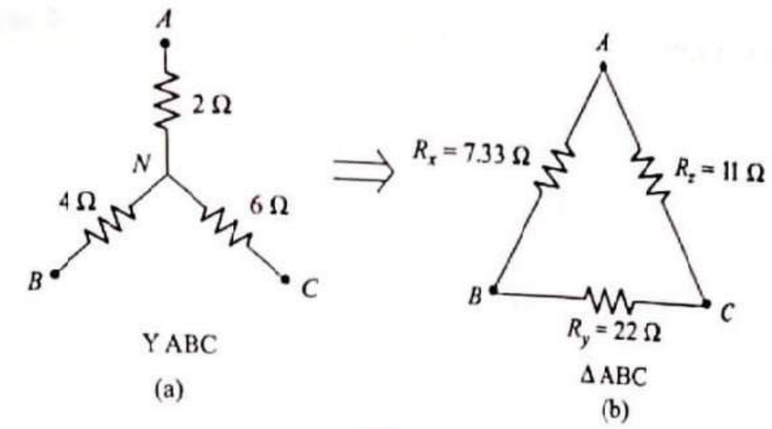

Fig. 1

$$R_y = 4 + 6 + \frac{4 \times 6}{2} = 22\ \Omega$$

$$R_z = 2 + 6 + \frac{2 \times 6}{4} = 11\ \Omega$$

(b) **Calculation of I_N**

Removing the load resistance from the network and short circuiting the load terminals, we get the modified network as shown in Fig. 2.

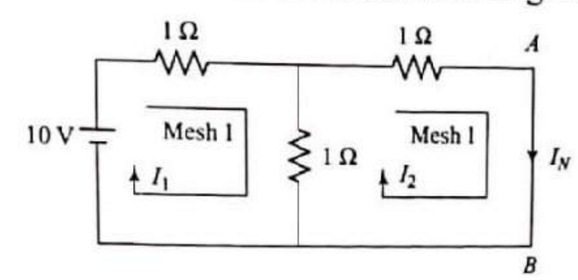

Fig. 2

The Norton's current I_N can be calculated by mesh analysis as shown below.

Applying KVL to Mesh 1,

$$-I_1 - (I_1 - I_2) + 10 = 0$$

$$-2I_1 + I_2 = -10 \qquad \text{(i)}$$

Applying KVL to Mesh 2,

$$-I_2 - (I_2 - I_1) = 0$$

$$I_1 - 2I_2 = 0 \qquad \text{(ii)}$$

From Eqs (i) and (ii)

$I_1 = 6.67$ A

and $I_2 = 3.33$ A from A to B

So, $I_N = 3.33$ A

Calculation of R_N

Removing the load resistance from the circuit and replacing the voltage source by short circuit, we get the network as shown in Fig. 3.

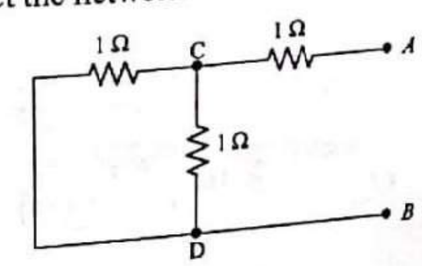

Fig. 3

In Fig. 3, equivalent resistance across the load terminals A and B is called Norton's resistance R_N.

Thus, $R_N = R_{AB} = (1\|1) + 1$

$= 0.5 + 1$

$= 1.5\ \Omega$

Calculation of load current

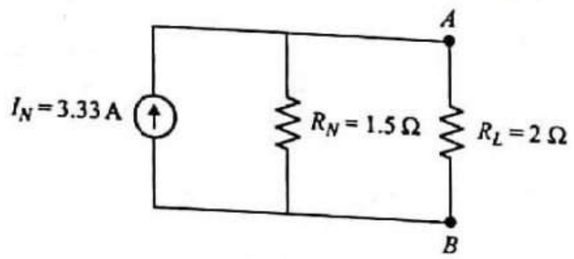

Fig. 4

Norton's equivalent circuit can be drawn as shown in Fig. 4.

By current division rule,

$$I_{2\,\Omega} = \frac{3.33 \times 1.5}{(1.5+2)}$$

$$I_{2\,\Omega} = 1.427\ \text{A}\ (\downarrow)$$

(c) Refer to Section 2.1.4.

(d) Refer to Section 2.3.5.

(e) Refer to Section 3.3.2.

(f) Refer to Section 4.4.

(g) Refer to Section 5.11.2.

2. (a) Find the current through 1 Ω resistance using Mesh Analysis. 6

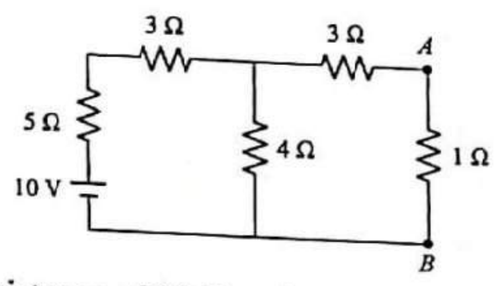

(b) A coil having a resistance of 10 Ω and an inductance of 40 mH is connected to a 200 V, 50 Hz supply. Calculate the impedance of the coil, current, power factor and power consumed. 8

(c) Draw the phasor diagram of a transformer on no load and explain the various currents and voltages in it. 6

Solution

(a) Marking the different meshes and assigning the separate mesh current for each mesh, we have

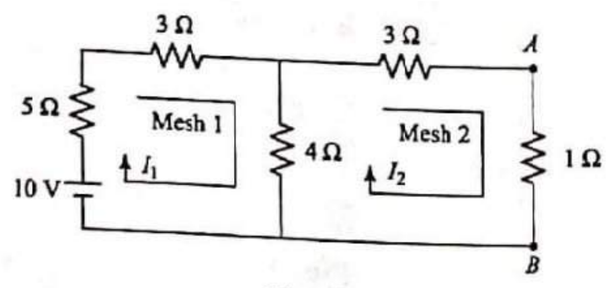

Fig. 5

Applying KVL to Mesh 1,

$$-5I_1 - 3I_1 - 4(I_1 - I_2) + 10 = 0$$

$$-12\,I_1 + 4\,I_2 = -10 \qquad \text{(i)}$$

Applying KVL to Mesh 2,

$$-3I_2 - 1I_2 - 4(I_2 - I_1) = 0$$

$$4I_1 - 8I_2 = 0 \qquad \text{(ii)}$$

From Eqs (i) and (ii) we get

$I_1 = 1$ A

$I_2 = 0.5$ A

So, Mesh current I_2 flows through 1 Ω resistor

$I_{1\Omega} = 0.5$ A (↓)

(b) The conditions of the example are shown in Fig. 6.

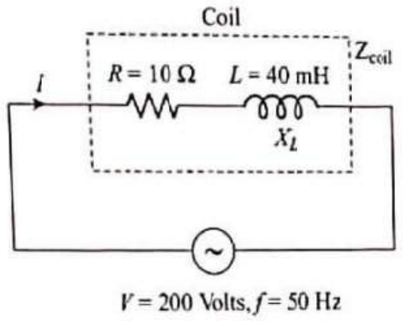

Fig. 6

We have, inductive reactance,

$$X_L = 2\pi fL$$

$$= 2\pi \times 50 \times 40 \times 10^{-3} = 12.57\ \Omega$$

Impedance of the coil,

$$Z_{coil} = \sqrt{R^2 + X_L^2}$$

$$= \sqrt{10^2 + (12.57)^2} = 16.06\ \Omega$$

By Ohm's law,

$$\text{Circuit current, } I = \frac{V}{Z_{coil}} = \frac{200}{16.06} = 12.45\ \text{A}$$

$$\text{Power Factor} = \cos\phi = \frac{R}{Z_{coil}} = \frac{10}{16.06} = 0.6227 \text{ lagging}$$

$$\text{Power consumed, } P = V I \cos\phi$$

$$= 200 \times 12.45 \times 0.6227$$

$$= 1550.52\ \text{W} = 1.55\ \text{kW}$$

(c) Refer to Section 4.9.

3. (a) Three similar coils each having a resistance of 10 Ω and inductance of 0.04 H are connected in star across a 3 phase, 50 Hz, 200 V supply. Calculate the line current, total power absorbed, reactive volt amperes and total volt amperes. 8

(b) With the help of a neat diagram explain how short circuit test is conducted on a single phase transformer. 6

(c) Draw the circuit diagram of a full wave centre tapped rectifier with capacitor filter and the corresponding input and output waveforms. 2

(d) With the help of a neat diagram explain the output characteristics of an NPN transistor in common emitter configuration. 4

Solution

(a) **Star Connection:**

When three similar coils are connected in star, we get a three-phase, Y-connected balanced load as shown in Fig. 7.

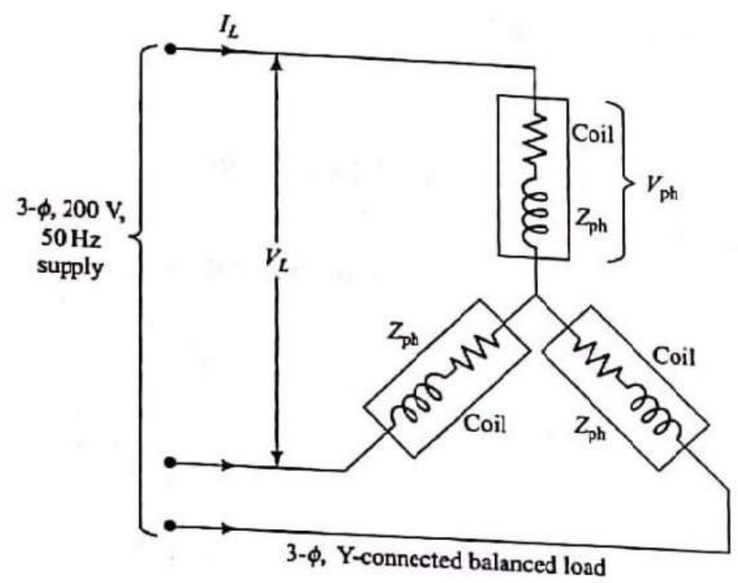

Fig. 7

Let the impedance of each coil be Z_{ph}

Z_{ph} can be calculated as follows:

Resistance of each coil, $R = 10\ \Omega$

Inductance of each coil, $L = 0.04$ H

Reactance of each coil, $X_L = 2\pi fL$

$= 2\pi \times 50 \times 0.04 = 12.57\ \Omega$

So, Rectangular form of Z_{ph}, $\bar{Z}_{ph} = (10 + j\,12.57)\ \Omega$

and Polar form of Z_{ph}, $\bar{Z}_{ph} = (16.06 \angle 51.5)\ \Omega$

From Polar form of Z_{ph},

$Z_{ph} = 16.06\ \Omega$ and phase angle, $\phi = 51.5°$

Phase voltage, $V_{ph} = \dfrac{V_L}{\sqrt{3}} = \dfrac{200}{\sqrt{3}} = 115.47$ volts

Phase current, $I_{ph} = \dfrac{V_{ph}}{Z_{ph}} = \dfrac{115.47}{16.06} = 7.19$ A

In Y-connection, $I_L = I_{ph}$

So, $I_L = 7.19$ A

Total power absorbed, $P = \sqrt{3}\ V_L I_L \cos\phi$

$P = \sqrt{3} \times 200 \times 7.19 \times \cos 51.5$

$P = 1550.49$ W

or $P = 1.55$ kW

Reactive volt ampere i.e. Reactive power (Q),

$Q = \sqrt{3}\ V_L I_L \sin\phi$

$Q = \sqrt{3} \times 200 \times 7.19 \times \sin 51.5$

$Q = 1949.23$ VAR

or $Q = 1.95$ kVAR

Total volt amperes i.e. Apparent power(s),

$S = \sqrt{3}\ V_L I_L$

$S = \sqrt{3} \times 200 \times 7.19$

$S = 2490.69$ VA

or $S = 2.49$ kVA

(b) Refer to Section 4.13.2.

(c) Refer to Section 5.12.1.

(d) Refer to Section 5.10.9.

4. (a) Using source transformation find the current flowing through the 8 Ω resistance. 7

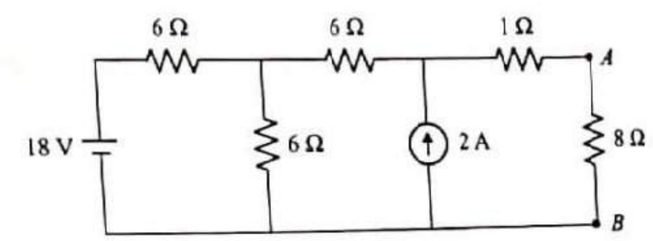

(b) Find the rms value for the given waveform. 5

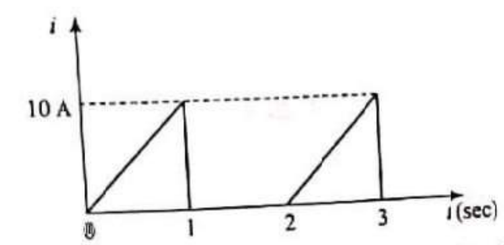

(c) Two wattmeters are used to measure power in a 3ϕ balanced delta connected load using two wattmeter method. The readings of the 2 wattmeters are 500 W and 2500 W respectively. Calculate the total power consumed by the 3ϕ load and the power factor. 4

(d) With the help of a neat circuit diagram and input and outpur waveforms explain the working of a half wave rectifier. 4

Solution

(a) Converting series combination of voltage source of 18 V and resistor of 6 Ω into equivalent parallel combination of current source and resistor.

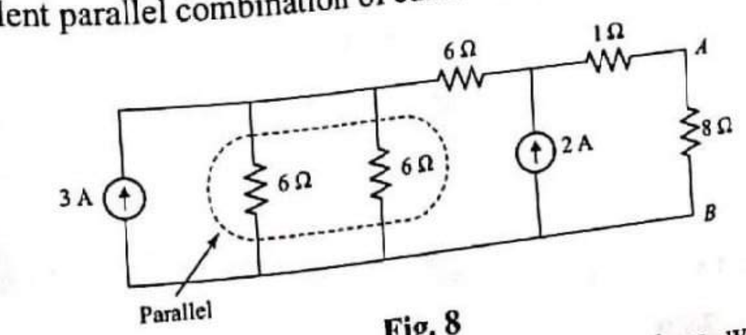

Fig. 8

In Fig. 8 , resistors 6 Ω are in parallel. Combining them, we get the circuit as shown in Fig. 9.

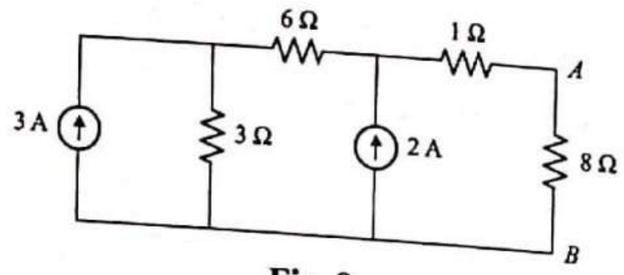

Fig. 9

In Fig. 9, converting parallel combination of current source of 3 A and resistor of 3 Ω into equivalent series combination of voltage source and resistor, we get the following circuit.

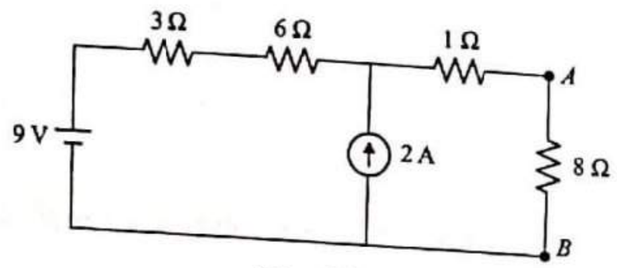

Fig. 10

In Fig. 10, resistors 3 Ω and 6 Ω are in series. Combining them, we get the following circuit.

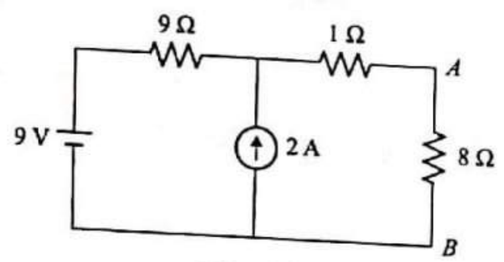

Fig. 11

Converting series combination of voltage source of 9 V and resistor of 9 Ω into equivalent parallel combination of current source and resistor, we get the circuit shown in Fig. 12.

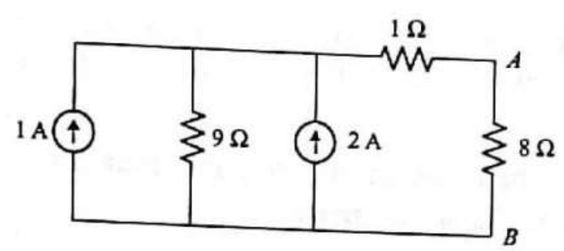

Fig. 12

Adding the parallel current sources, we get the following circuit:

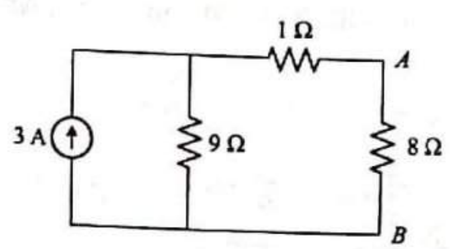

Fig. 13

By current division rule,

$$I_{8\Omega} = \frac{3\times 9}{9+1+8} = 1.5\text{ A }(\downarrow)$$

(b) As the given waveform is unsymmetrical, for rms value, we have to consider full cycle.

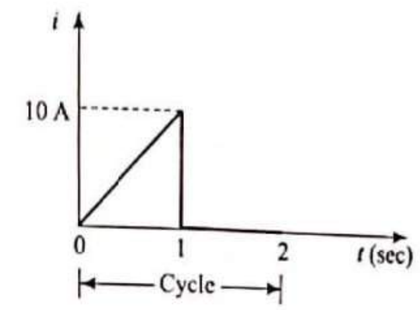

Fig. 14

The equations of the current waveform is

$i = 10t \qquad 0 < t < 1$

$i = 0 \qquad 1 < t < 2$

So, $I_{rms} = \sqrt{\frac{1}{2}\int_0^2 i^2 dt}$

$$I_{rms}^2 = \frac{1}{2}\int_0^2 i^2 dt$$

$$I_{rms}^2 = \frac{1}{2}\left\{\int_0^1 i^2 dt + \int_1^2 i^2 dt\right\}$$

$$I_{rms}^2 = \frac{1}{2}\left\{\int_0^1 (10t)^2 dt + \int_1^2 0^2 dt\right\}$$

$$I_{rms}^2 = \frac{1}{2}\int_0^1 (10)^2 t^2 dt$$

$$I_{rms}^2 = \frac{(10)^2}{2}\left[\frac{t^3}{3}\right]_0^1$$

$$I_{rms}^2 = \frac{(10)^2}{2}\left[\frac{1^3}{3} - \frac{0^3}{3}\right]$$

$I_{rms}^2 = 16.67$

So, $I_{rms} = 4.08$ A

(c) Let

$W_2 = 2500$ W

$W_2 = 500$ W

So, total power, $P = W_1 + W_2 = 500 + 2500 = 3000$ W

Now, phase angle (ϕ) is calculated as

$$\phi = \tan^{-1}\left\{\frac{\sqrt{3}\,(\text{Higher reading} - \text{Lower reading})}{\text{Lower reading} + \text{Higher reading}}\right\}$$

$$= \tan^{-1}\left\{\frac{\sqrt{3}\,(2500 - 500)}{500 + 2500}\right\}$$

$= \tan^{-1}(1.1547)$

$= 49.11°$

So, power factor $= \cos\phi = \cos 49.11 = 0.6546$

(d) Refer to Section 5.11.1.

5. (a) Find the current through 8 Ω resistance using Thevenin's theorem. **8**

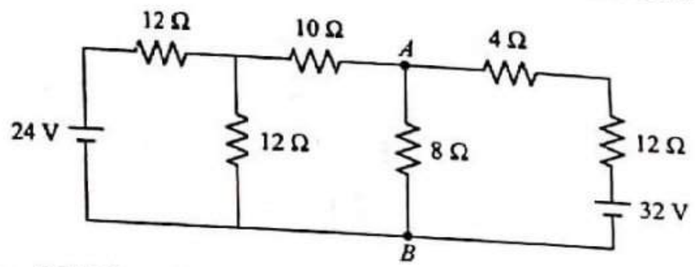

(b) A resistance of 10 Ω and a pure coil of inductance 31.8 mH are connected in parallel across 200 V, 50 Hz supply. Find the total current and power factor. **4**

(c) A 5 kVA, 1000/200 V, 50 Hz, single phase transformer gave the following test results.

OC test (HV side):	1000 V	0.24 A	90 W
SC test (HV) side:	50 V	5 A	110 W

Calcutate the equivalent circuit parameters of the transformer and draw the equivalent circuit diagram. **8**

Solution

(a) Calculation of V_{TH}

Removing the load resistance from the network, we get the following network.

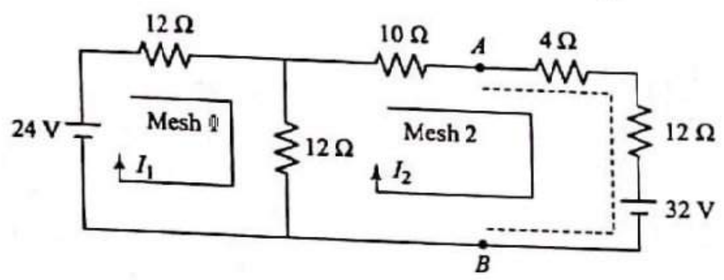

Fig. 15

In Fig. 15, voltage appears across the load terminals A and B, which is called Thevenin's voltage V_{TH}. For calculation of V_{TH}, the selected path from A to B is marked by the dotted line in Fig. 15. As this path contains the resistors 4 Ω and 12 Ω, currents through these resistors are required. By using Mesh analysis, this required current can be calculated as follows.

Applying KVL to Mesh 1,

$$-12\,I_1 - 12(I_1 - I_2) + 24 = 0$$

$$-24\,I_1 + 12\,I_2 = -24 \qquad \text{(i)}$$

Applying KVL to Mesh 2,

$$-10\,I_2 - 4I_2 - 12I_2 - 32 - 12(I_2 - I_1) = 0$$

$$12I_1 - 38\,I_2 = 32 \qquad \text{(ii)}$$

Solving Eqs (i) and (ii),

$$I_2 = -0.625 \text{ A}$$

Hence, $V_{TH} = V_{AB}$

$$= 32 + 12\,I_2 + 4\,I_2$$

$$= 32 + 12(-0.625) + 4(-0.625)$$

$$= 22 \text{ volts}$$

Calculation of R_{TH}

Removing the load resistance of the network and replacing the voltage sources by short circuit, we get the circuit as shown in Fig. 16.

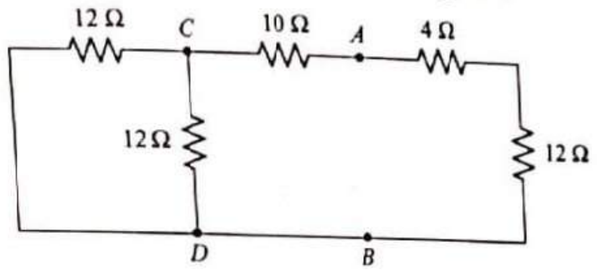

Fig. 16

In Fig. 16, equivalent resistance across the load terminals A and B is called Thevenin's resistance R_{TH}.

In Fig. 16. two 12 Ω resistors are in parallel across C and D.

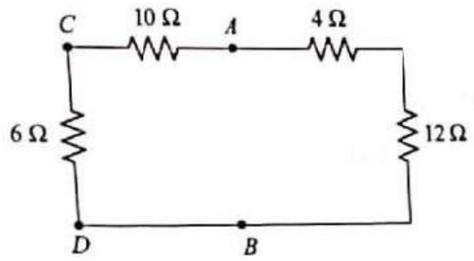

Fig. 17

By series-parallel circuit reduction techniques, we modify the circuit as shown below.

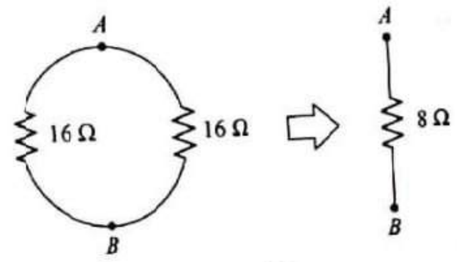

Fig. 18

Thus $R_{TH} = R_{AB} = 8\ \Omega$

Calculation of load current

Thevenin's equivalent circuit can be drawn as shown in Fig. 19.

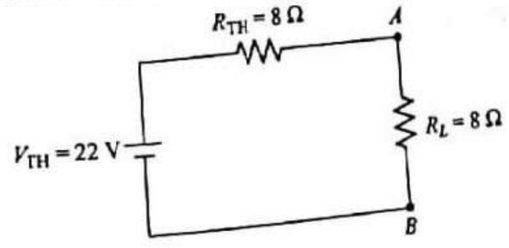

Fig. 19

By Ohm's law,

$$I_{8\Omega} = \frac{V_{TH}}{R_{TH} + R_L} = \frac{22}{8+8} = 1.375 \text{ A } (\downarrow)$$

(b) The conditions in the example are shown in Fig. 20.

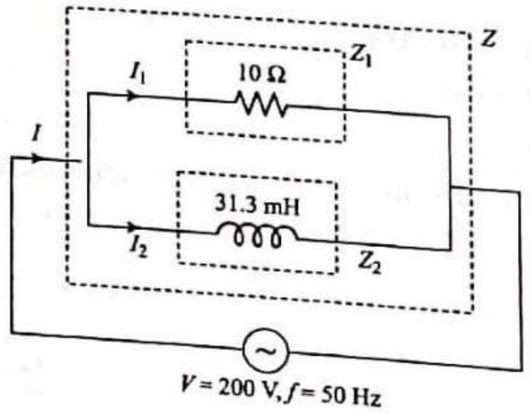

Fig. 20

Given: $V = 200$ volts

$f = 50$ Hz

$L = 31.8 \times 10^{-3}$ H $\Rightarrow X_L = 2\pi fL = 2\pi \times 50 \times 31.8 \times 10^{-3} = 10\ \Omega$

Taking V as reference phasor,

$\bar{V} = (200\angle 0)$ volts

$\bar{Z}_1 = (10 + j0)\ \Omega = (10\angle 0)\ \Omega$

$\bar{Z}_2 = (0 + j10)\ \Omega = (10\angle 90)\ \Omega$

Total impedance of the circuit,

$$\bar{Z} = \frac{\bar{Z}_1\bar{Z}_2}{\bar{Z}_1 + \bar{Z}_2}$$

$$\bar{Z} = \frac{(10\angle 0)(10\angle 90)}{(10 + j0) + (0 + j10)}$$

$$\bar{Z} = \frac{(100\angle 90)}{(10 + j10)}$$

$$\bar{Z} = \frac{(100\angle 90)}{(14.14\angle 45)}$$

$$\bar{Z} = (7.072\angle 45)\ \Omega$$

Total current, $\bar{I} = \dfrac{\bar{V}}{\bar{Z}} = \dfrac{(200\angle 0)}{(7.072\angle 45)} = (28.28\angle -45)$ A

Power factor, pf $= \cos\phi = \cos 45 = 0.7075$ lagging

(c) Refer to Example 4.22 (on page no. 412).

6. (a) Find the value of current flowing through the 5 Ω resistance using superposition theorem. **7**

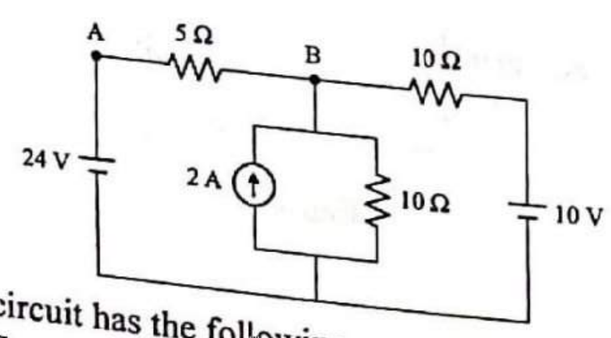

(b) A series RLC circuit has the following parameter values: $R = 10\ \Omega$, $L = 0.014$ H, $C = 100\ \mu$F. Compute the resonant frequency, quality factor, bandwidth, lower cut-off frequency and upper cut-off frequency. **7**

(c) With the help of a neat circuit diagram and phasor diagram explain the 2-wattmeter method to measure power in a 3ϕ balanced star connected load. **6**

Solution

(a) **Step I:** Considering 24 V source acting alone and replacing 2 A source by open circuit and 10 V source by short circuit we get the following circuit.

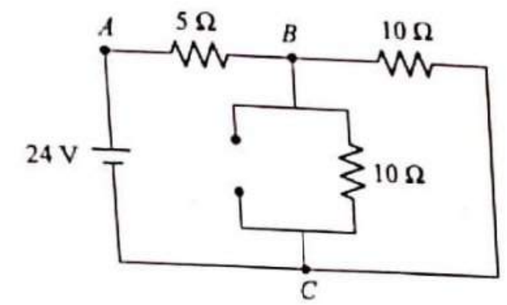

Fig. 21

Across B and C terminals, two 10 Ω resistors are in parallel.

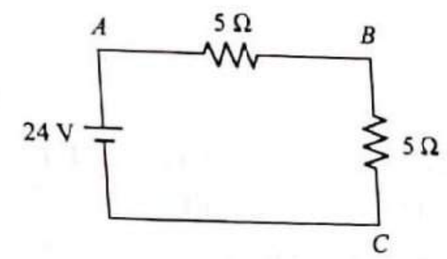

Fig. 22

Hence, $I_{5\Omega} = \dfrac{24}{5+5} = 2.4$ A$(\rightarrow)$

Step II: Considering 2 A source acting alone and replacing 24 V source and 10 V source by short circuit.

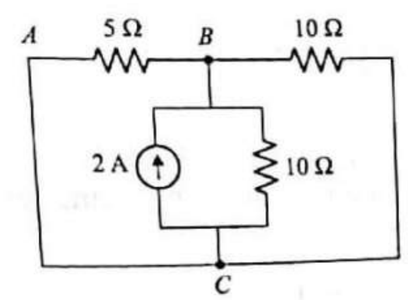

Fig. 23

In Fig. 23, across BC, two 10 Ω resistors are in parallel. Replacing this parallel combination by equivalent resistance, we get the circuit as shown in Fig. 24.

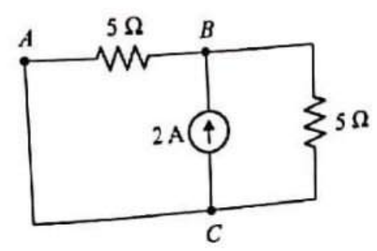

Fig. 24

By current division rule, current flowing through branch BAC is given as

$$I_{BAC} = I_{5\Omega} = \frac{2 \times 5}{5+5} = 1\text{ A}(\leftarrow)$$

Step III: Considering 10V source acting alone and replacing 24 V source by short circuit and 2 A source by open circuit.

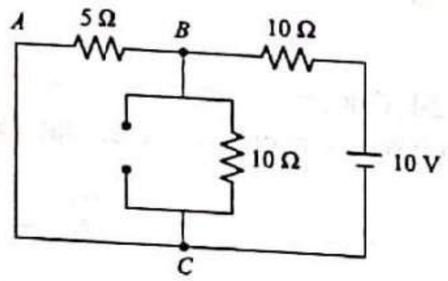

Fig. 25

The simplified circuit is shown in Fig. 26.

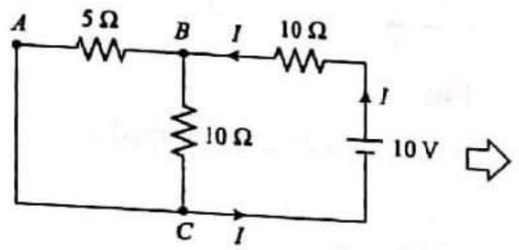

Fig. 26

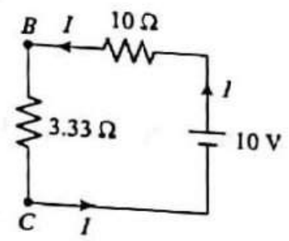

Fig. 27

In Fig. 26, 5 Ω and 10 Ω resistors are in parallel. Let the total current produced by the 10 V source be I A. The total current I A divides at node B.

From Fig. 27, the total current I can be calculated as

$$I = \frac{10}{10+3.33} = 0.75 \text{ A}$$

Applying current division rule in Fig. 26, current through 5 Ω can be calculated as

$$I_{5\Omega} = \frac{0.75 \times 10}{(5+10)} = 0.5 \text{ A from } B \text{ to } A$$

i.e. $I_{5\Omega} = 0.5$ A (←)

Step IV: According to superposition theorem, resultant current through 5 Ω is given as

$$I_{5\Omega} = 2.4 \text{ A } (\rightarrow) + 1 \text{ A } (\leftarrow) + 0.5 \text{ A } (\leftarrow)$$

$$I_{5\Omega} = 0.9 \text{ A } (\rightarrow)$$

(b) Refer to Example 2.57 (page no. 267).

(c) Refer to Section 3.6.2.

December 2015

(REVISED COURSE)

Time: 3 Hours

[Total Marks : 80]

N.B.: (1) Question No. 1 is compulsory.
(2) Attempt any three questions from the remaining five questions.
(3) Figures to the right side indicate full marks.
(4) Assume suitable data if necessary.

1. (a) Find equivalent resistance across terminals A and B of network shown. 3

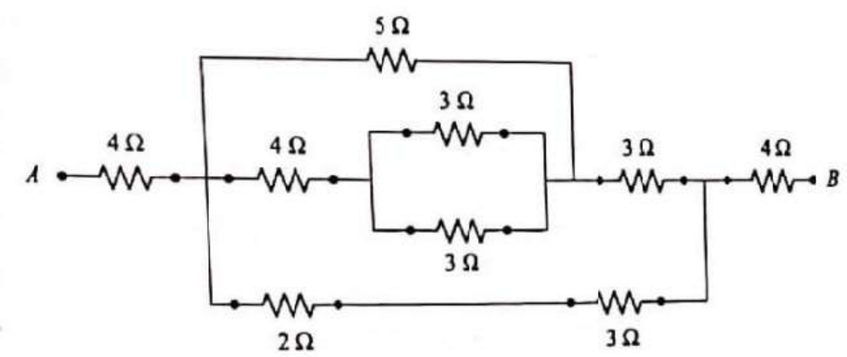

(b) State and explain maximum power transfer theorem. 3

(c) Find the rms value of current flowing through a 314 μF capacitor when connected to 230 V, 50 Hz, 1-Φ AC Supply. 3

(d) A series R-L-C circuit is supplied with $v(t) = 10\sin(1000\,t)$ volts. If the maximum peak voltage across capacitor is 400 volts, find the quality factor of the circuit. 2

(e) Draw and explain the power triangle for a 3-Φ lagging load. 4

(f) A 80 kVA, 3200/400 V, 1-Φ, 50 Hz transformer has 111 turns on secondary winding. Calculate (i) number of turns on primary winding (ii) Secondary full load current (iii) Cross sectional area of the core if the maximum flux density is 1.2 tesla. 2

(g) Justify that full wave rectifier is more efficient that half wave rectifier.

Solution

(a) In the network shown in Fig. 1, across D and E, both 3 Ω resistors are in parallel.

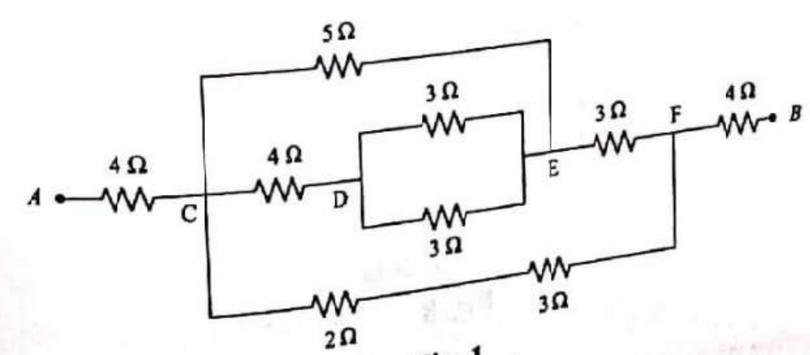

Fig. 1

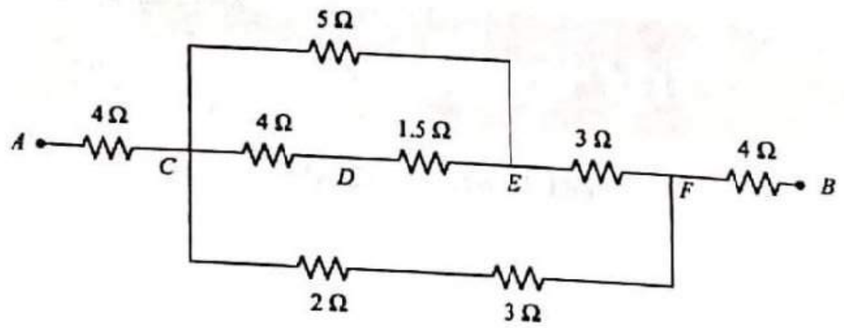

Fig. 2

By series-parallel reduction technique we get the following circuits:

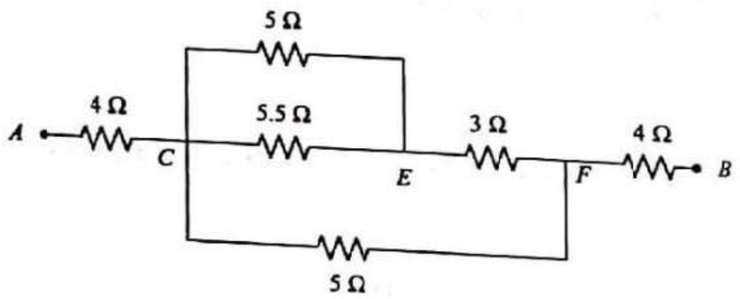

Fig. 3

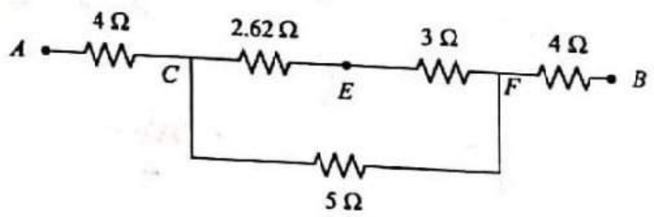

Fig. 4

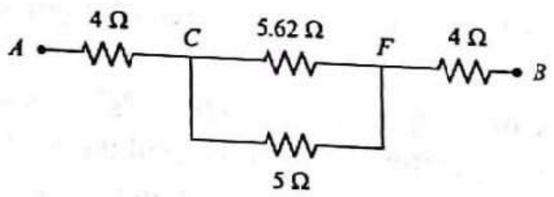

Fig. 5

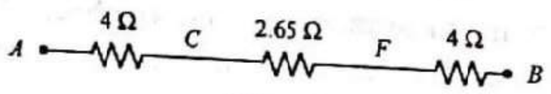

Fig. 6

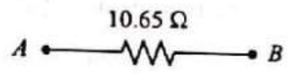

Fig. 7

Hence $R_{AB} = 10.65\ \Omega$

(b) Refer to Section 1.19.

(c) Conditions in the example are given in Fig. 8.

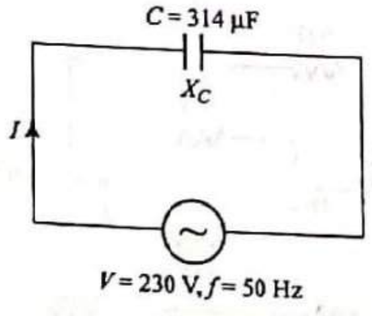

Fig. 8

Capacitive reactance, $X_C = \dfrac{1}{2\pi f C} = \dfrac{1}{2\pi \times 50 \times 314 \times 10^{-6}} = 10.14\ \Omega$

So, the rms value of current, $I = \dfrac{V}{X_C} = \dfrac{230}{10.14} = 22.68$ A

(d) Given:

Supply voltage $v(t) = 10 \sin(1000t)$, i.e., $V = \dfrac{10}{\sqrt{2}} = 7.071$ V.

The maximum voltage appearing across the capacitor is 400 volts, i.e. voltage appears across the capacitor at Resonance: $V_C = 400$ volts.

So, at Resonance,

$$Q\text{-factor} = \frac{V_L \text{ or } V_C}{V} = \frac{400}{7.071} = 56.57$$

(e) Refer to Section 3.4.

(f) Refer Example 4.2 (page no. 382).

(g) Refer to Section 5.11.

2. (a) By mesh analysis find the current through 4 ohm resistor for the given circuit shown below. **6**

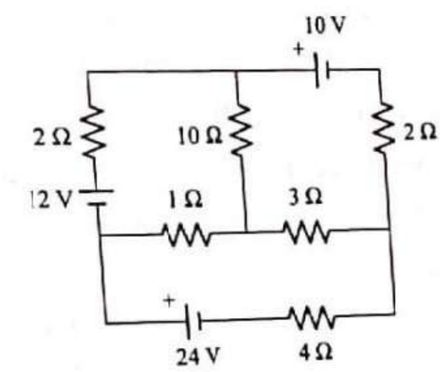

(b) When a resistor and a choke coil in series are conneted to a 240 V supply, a current of 3 A flows, lagging 37° behind the supply voltage, while voltage across the coil is 171 V. Find resistance of resistor, resistance and reactance of coil. **8**

(c) Draw and explain the phasor diagram for practical transformer connected to lagging power factor load. **6**

Solution

(a) Assuming the separate mesh current for each mesh, we obtain Fig. 9.

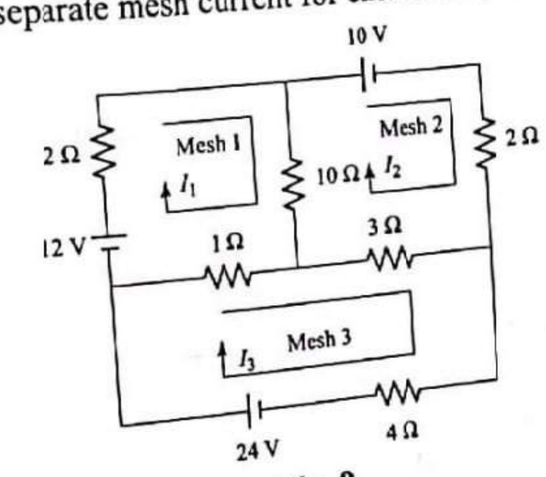

Fig. 9

Applying KVL to Mesh 1 (i)

$$12 - 2I_1 - 10(I_1 - I_2) - 1(I_1 - I_3) = 0$$

$$-13I_1 + 10I_2 + I_3 = -12$$

Applying KVL to Mesh 2

$$-10-2I_2-3(I_2-I_3)-10(I_2-I_1) = 0$$

$$10I_1-15I_2+3I_3 = 10 \quad \text{(ii)}$$

Applying KVL to Mesh 3

$$-1(I_3-I_1)-3(I_3-I_2)-4I_3+24=0$$

$$I_1+3I_2-8I_3 = -24 \quad \text{(iii)}$$

From Eqs (i), (ii), and (iii) we get

$$I_3 = 4.1 \text{ A}$$

Hence $I_{4\Omega} = 4.1 \text{ A}(\leftarrow)$

(b) Refer to Example 2.39 (page no. 243).

(c) Refer to Section 4.10.2.

3. (a) A 415 V, 50 Hz, 3Φ voltage is applied to three star connected identical impedances each consisting of a resistance of 15 ohm, capacitance of 177 μF and inductance of 0.1 H in series. Find (i) Phase current (ii) Line current (iii) power drawn (iv) power factor (v) reactive power (vi) Total kVA. Draw phasor diagram. **8**

(b) A 5 kVA, 1000/200 V, 50 Hz, 1-Φ, transformer gave following test results:

O.C. Test (H.V. Side) :- 1000 V, 0.24 A, 90 W

S.C. Test (H.V. Side) :- 50 V, 5 A, 110 W

Calculate (i) Equivalent circuit parameters referred to LV side.

(ii) Regulation at Half load at 0.8 lagging power factor. **6**

(c) Explain why we need filter. **2**

(d) Draw and explain the output characteristics of a transistor in CE configuration. Also indicate various regions of operation on the characteristics. **4**

Solution

(a) Refer to Example 3.11 (page no. 346).

(b) (i) Equivalent circuit parameters referred to LV side:

From OC test:

The test is conducted on primary side.

Given: $V_1 = 1000$ V, $I_0 = 0.24$ A, $W = 90$ W

We have $W = V_1 I_0 \cos\phi_0$

So, $$\cos\phi_0 = \frac{W}{V_1 I_0} = \frac{90}{1000\times 0.24} = 0.375 \text{ lagging}$$

or $\sin\phi_0 = 0.927$

The working component of no-load current

$$I_W = I_0 \cos\phi_0 = 0.24\times 0.375 = 0.09 \text{ A}$$

The magnetizing component of no-load current

$$I_\mu = I_0 \sin\phi_0 = 0.24\times 0.927 = 0.222 \text{ A}$$

$$R_0 = \frac{V_1}{I_W} = \frac{1000}{0.09} = 11111\ \Omega$$

$$X_0 = \frac{V_1}{I_\mu} = \frac{1000}{0.222} = 4504.5\ \Omega$$

From SC Test:

The test is conducted on primary side.

Given: $V_{SC} = 50$ V, $I_1 = 5$ A, $W = 110$ W

We have $W = I_1^2 R_{01}$

or $$R_{01} = \frac{W}{I_1^2} = \frac{110}{(5)^2} = 4.4\ \Omega$$

$$Z_{01} = \frac{V_{SC}}{I_1} = \frac{50}{5} = 10\Omega$$

$$X_{01} = \sqrt{Z_{01}^2 - R_{01}^2} = \sqrt{10^2 - 4.4^2} = 8.98\ \Omega$$

(ii) Regulation at Half load at 0.8 lagging pf:

$$(I_2)_{FL} = \frac{\text{kVA Rating}\times 1000}{E_2} = \frac{5\times 1000}{200} = 25 \text{ A}$$

So, $$(I_2)_{HL} = \frac{25}{2} = 12.5 \text{ A}$$

$$K = \frac{E_2}{E_1} = \frac{200}{1000} = 0.2$$

Now,

$$R_{02} = K^2 R_{01} = (0.2)^2 \times 4.4 = 0.176\ \Omega$$

$$X_{02} = K^2 X_{01} = (0.2)^2 \times 8.98 = 0.36\ \Omega$$

So, % Regulation at Half load at 0.8 lagging pf can be calculated as

$$\% \text{ Reg} = \frac{I_2 R_{02}\cos\phi + I_2 X_{02}\sin\phi}{E_2}\times 100$$

$$\% \text{ Reg} = \frac{12.5\times 0.176\times 0.8 + 12.5\times 0.36\times 0.6}{200}\times 100$$

$$\text{Reg} = 2.25\ \%$$

(c) Refer to Section 5.12.

(d) Refer to Section 5.10.9.

4. (a) Using source transformation, find the current through 6 ohm resistor of network shown in figure. **7**

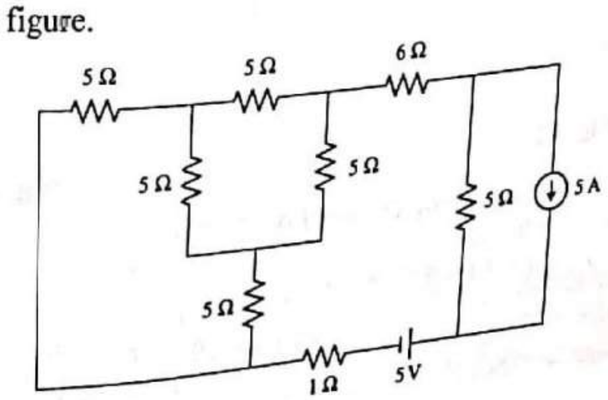

(b) Two currents $i_1 = 100 \sin(\omega t + \pi/4)$ and $i_2 = 25 \sin(\omega t - \pi/6)$ are fed to a common conductor. Find the total current. If the conductor resistance is 10 Ω what is the power dissipated in the conductor. 5

(c) Explain the measurement of 3 Φ power by two wattmeter method. 4

(d) Define Ripple factor. What is requirement of a rectifier in terms of ripple factor? How is it achieved? 4

Solution

(a) Converting the parallel combination of current source of 5A and resistors of 5 Ω into equivalent series combination of voltage source and resistor we get the following circuit.

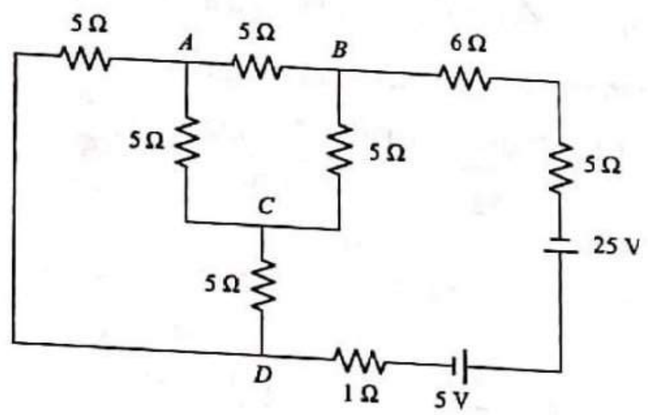

Fig. 10

Converting the delta connection formed by three 5 Ω resistors into equivalent star network, i.e., $\Delta ABC \Rightarrow$ Y ABC, we get the following network.

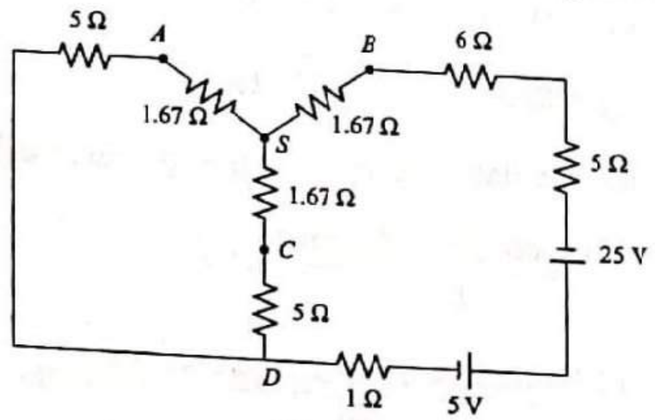

Fig. 11

By series-parallel circuit reduction techniques, we get the following circuits.

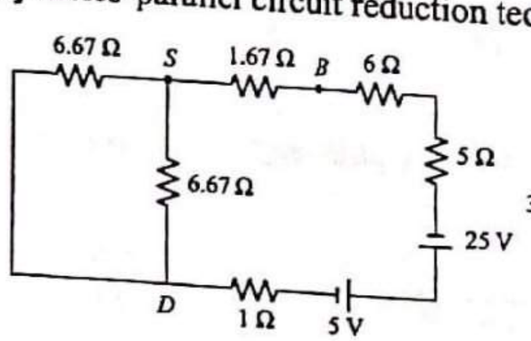

Fig. 12

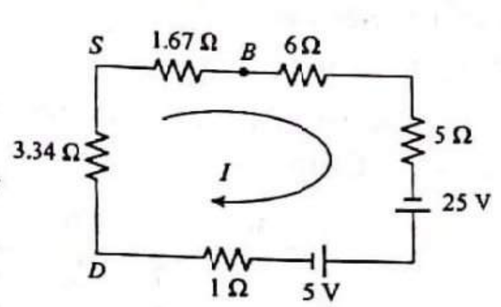

Fig. 13

In Fig. 13, assuming the loop current I A

Applying KVL to loop,

$$-1.67I - 6I - 5I + 25 - 5 - I - 3.34I = 0$$

So,

$$-17.01I + 20 = 0$$

$$I = 1.18 \text{ A}$$

Hence, $I_{6\Omega} = 1.18$ A (→)

(b) Given:

$$i_1 = 100 \sin\left(\omega t + \frac{\pi}{4}\right)$$

$$i_2 = 25 \sin\left(\omega t - \frac{\pi}{6}\right)$$

Converting the above std. sinusoidal forms into polar forms

$$\bar{I}_1 = (70.71\angle 45) \text{ A}$$

$$\bar{I}_2 = (17.68\angle -30) \text{ A}$$

Converting the polar forms into rectangular forms

$$\bar{I}_1 = (50 + j\,50) \text{ A}$$

$$\bar{I}_2 = (15.31 - j\,8.84) \text{ A}$$

The total current I A can be calculated as

$$\bar{I} = \bar{I}_1 + \bar{I}_2$$

$$\bar{I} = (50 + j\,50) + (15.31 - j\,8.84)$$

$$\bar{I} = (65.31 + j\,41.16) \text{ A}$$

$$\bar{I} = (77.2\angle 32.22) \text{ A}$$

Power dissipated in 10 Ω resistor

$$P = I^2 R$$

$$P = (77.2)^2 \times 10$$

$$P = 59598.4 \text{ W}$$

$$P = 59.598 \text{ kW}$$

(c) Refer to Section 3.6.2.

(d) Refer to Section 5.11.

5. (a) In the circuit given below find R for maximum power delivered to it. Also find P_{max}. 8

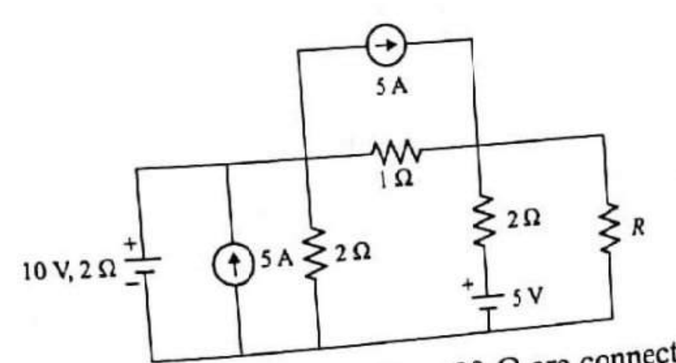

(b) Two impedances of $12 + j16$ Ω and $10 - j20$ Ω are connected in parallel across 230 V, 50 Hz, 1 Φ, ac supply. Find the kW, kVA, kVAR and power factor of each branch. 4

(c) Explain transformer tests to find the following parameters of transformer. 8

(i) Equivalent resistance as referred to primary side

(ii) Equivalent core loss resistance

(iii) Equivalent leakage reactance as referred to primary side

(iv) Magnetizing reactance

Solution

(a) According to maximum power transfer theorem, maximum power will be delivered to load resistance R when load resistance R is made equal to R_{TH}, the thevenin's resistance at load terminals A and B. Let load terminals be A and B.

Calculation of R_{TH}

Removing the load resistance from the network and replacing all the sources with their internal resistances we get

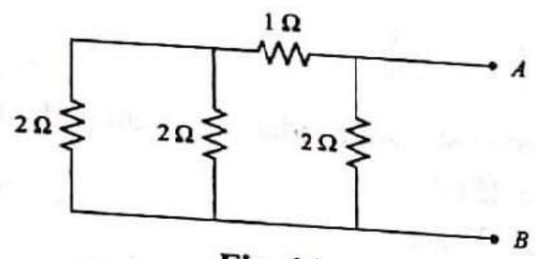

Fig. 14

By series-parallel circuit reduction techniques we get

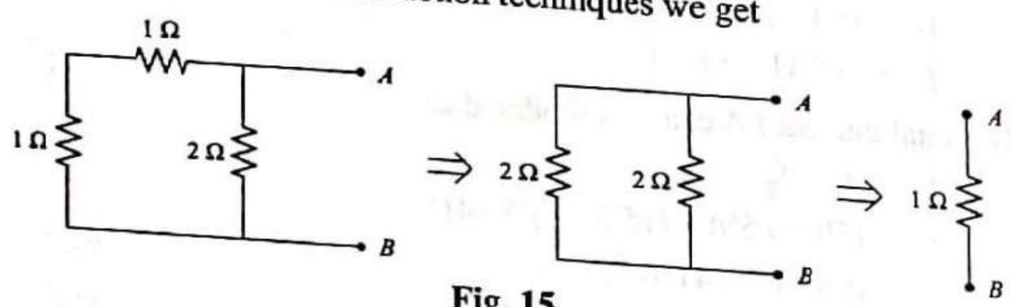

Fig. 15

Thus $R_{TH} = R_{AB} = 1\ \Omega$. Hence when $R = 1\ \Omega$, maximum power is delivered to the circuit.

Calculation of V_{TH}

Removing the load resistance of the circuit, we get the following circuit.

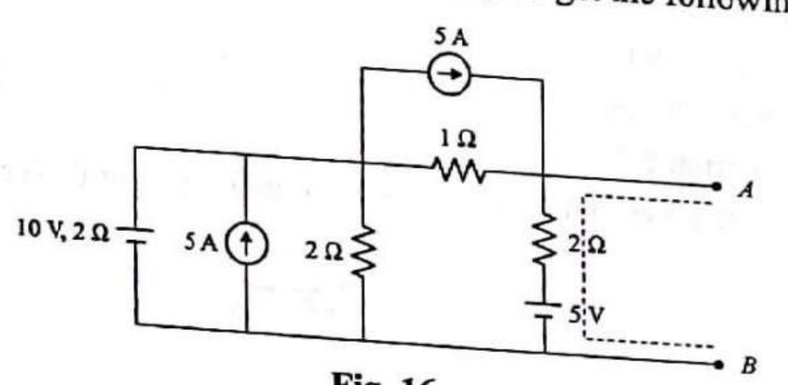

Fig. 16

In Fig. 16, voltage appears across the load terminals A and B, which is called Thevenin's voltage V_{TH}. For calculation of V_{TH}, i.e., V_{AB}, the selected path from A to B is marked by dotted line in Fig. 16. As this path contains resistor 2 Ω, current through this resistance is required.

In Fig. 16, the voltage source of 10 V and its internal resistance of 2 Ω are in series. Converting this series combination into equivalent current source and parallel resistor we get

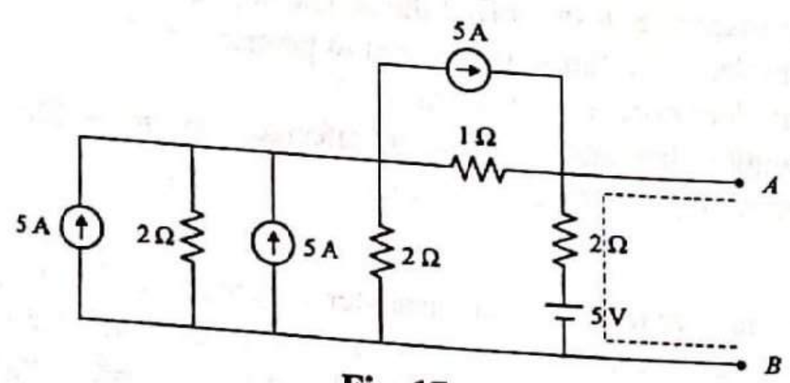

Fig. 17

Converting parallel combination of current source of 5 A and resistor of 1 Ω into equivalent series combination of voltage source and resistor, we get Fig. 18.

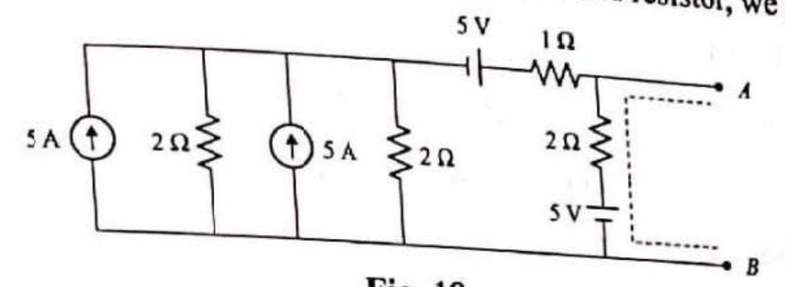

Fig. 18.

By adding the parallel current sources we get

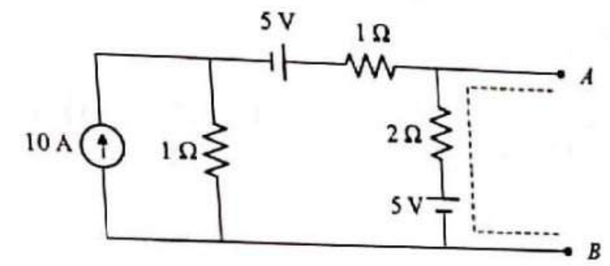

Fig. 19

Converting parallel combination of current source of 10 A and resistor of 1 Ω into equivalent combination of voltage source and resistor, we get Fig. 20.

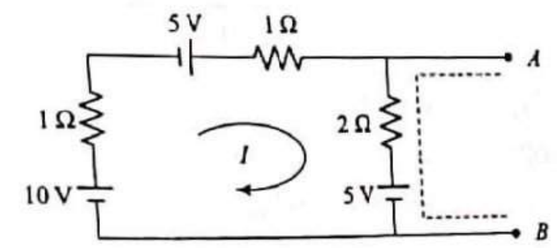

Fig. 20

Let the loop current be I A.

Applying KVL to loop

$$5 - I - 2I - 5 + 10 - I = 0$$

So, $I = 2.5$ A

Hence, $V_{TH} = V_{AB}$

$$= 5 + 2I$$
$$= 5 + 2(2.5)$$
$$= 10 \text{ V}$$

Hence, maximum power delivered,

$$P_{max} = \frac{V_{TH}^2}{4R_{TH}} = \frac{(10)^2}{4 \times 1} = 25 \text{ W}$$

(b) The conditions of the example are shown in Fig. 21.

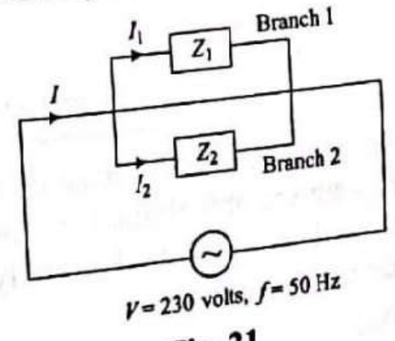

Fig. 21

Given:

Taking supply voltage V as reference,

So, $\bar{V} = (230\angle 0)$ volts

Let $\bar{Z}_1 = (12 + j16)\ \Omega = (20\angle 53.13)\ \Omega$

$\bar{Z}_2 = (10 - j20)\ \Omega = (22.36\angle -63.43)\ \Omega$

Now, Branch current I_1

$$\bar{I}_1 = \frac{\bar{V}}{\bar{Z}_1} = \frac{(230\angle 0)}{(20\angle 53.13)} = (11.5\angle -53.13)\text{ A}$$

Branch current I_2

$$\bar{I}_2 = \frac{\bar{V}}{\bar{Z}_2} = \frac{(230\angle 0)}{(22.36\angle -63.43)} = (10.29\angle 63.43)\text{ A}$$

For Branch 1:

$$\text{kW} = \frac{VI_1\cos\phi_1}{1000} = \frac{230\times 11.5\times\cos 53.13}{1000} = 1.587$$

$$\text{kVAR} = \frac{VI_1\sin\phi_1}{1000} = \frac{230\times 11.5\times\sin 53.13}{1000} = 2.116$$

$$\text{kVA} = \frac{VI_1}{1000} = \frac{230\times 11.5}{1000} = 2.645$$

Power Factor = Pf = cos 53.13 = 0.6 lag

For Branch 2:

$$\text{kW} = \frac{VI_2\cos\phi_2}{1000} = \frac{230\times 10.29\times\cos(63.43)}{1000} = 1.059$$

$$\text{kVAR} = \frac{VI_2\sin\phi_2}{1000} = \frac{230\times 10.29\times\sin(-63.43)}{1000} = 2.116$$

$$\text{kVA} = \frac{VI_2}{1000} = \frac{230\times 10.29}{1000} = 2.366$$

Power factor = pf = cos 63.43 = 0.45 lead

(c) Refer to Section 4.13.

6. (a) By superposition theorem find current through 30 ohm resistor of the network given. **7**

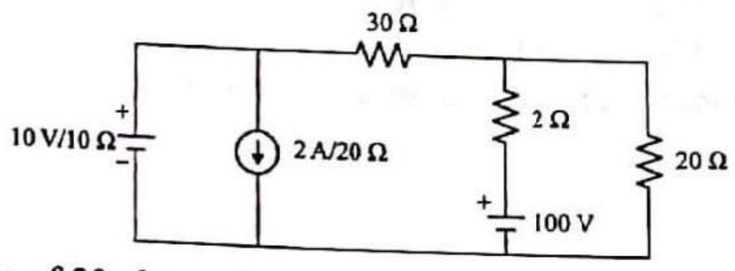

(b) A resistance of 20 ohm and a pure inductance of 0.2 H is connected in parallel with 200 μF capatcitor with variable frequency, 230 V supply. Find the resonant frequency at which the total current from the supply is in phase with supply voltage. Also find the value of this current. **7**

(c) Each phase of a 3-Φ delta connected load has an impedance of $Z_{ph} = 50\angle 60\ \Omega$. The line voltage is 400 V. Calculate total power. What will be the reading of two wattmeters connected to measure the power? **6**

Solution

(a) *Step I:* Considering 10 V/10 Ω source acting alone, replacing all other sources with their internal resistances.

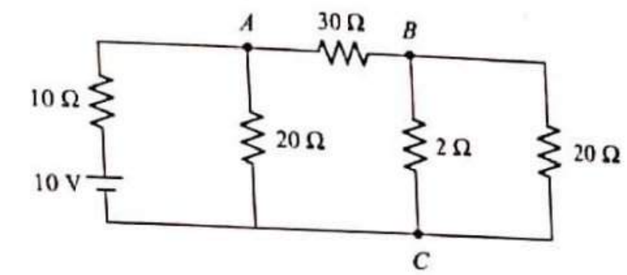

Fig. 22

In Fig. 22, resistors 2 Ω and 20 Ω are in parallel across B and C terminals.

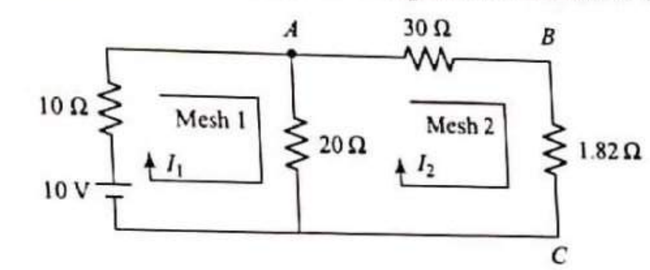

Fig. 23

By Mesh analysis,

Applying KVL to Mesh 1

$$10 - 10I_1 - 20(I_1 - I_2) = 0$$

$$-30I_1 + 20I_2 = -10 \quad \text{(i)}$$

Applying KVL to Mesh 2

$$-30I_2 - 1.82I_2 - 20(I_2 - I_1) = 0$$

$$20I_1 - 51.82I_2 = 0 \quad \text{(ii)}$$

From Eqs (i) and (ii)

$$I_2 = 0.173\text{ A}$$

So, $I_{30\,\Omega} = 0.173\text{ A}\ (\rightarrow)$

Step II: Considering 2 A/20 Ω source acting alone, replacing all other sources with their internal resistance we get the circuit as shown in Fig. 24.

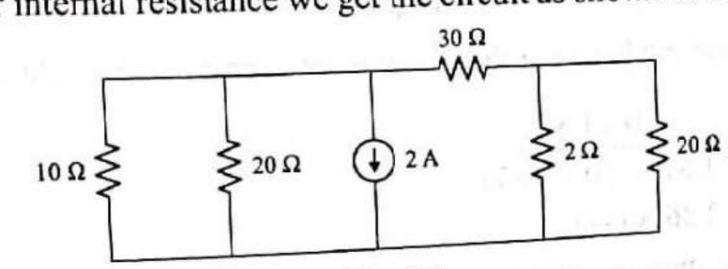

Fig. 24

Replacing the parallel combinations by their equivalent resistances we get

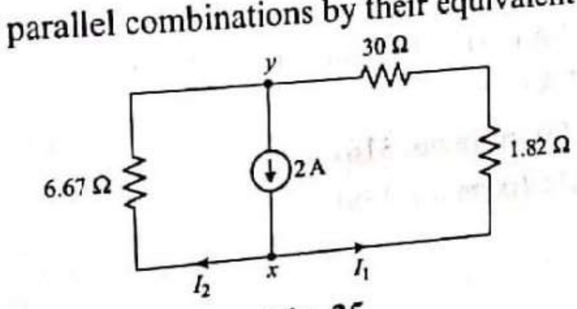

Fig. 25

In Fig. 25, the total current 2 A divides at node x.

So, by current divisional rule, current I_1 can be calculated as

$$I_1 = \frac{2 \times 6.67}{6.67 + (30 + 1.82)}$$

$$I_1 = 0.35 \text{ A}$$

Hence $I_{30\,\Omega} = 0.35 \text{ A } (\leftarrow)$

Step III: Considering 100 V source acting alone, replacing all other sources with their internal resistances we get

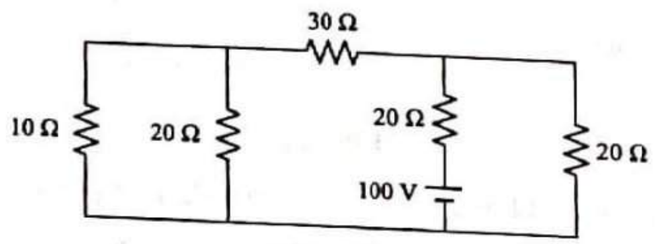

Fig. 26

Converting series combination of voltage source of 100 V and resistor of 2 Ω into equivalent combination of current source and resistor we get the circuit as shown in Fig. 27.

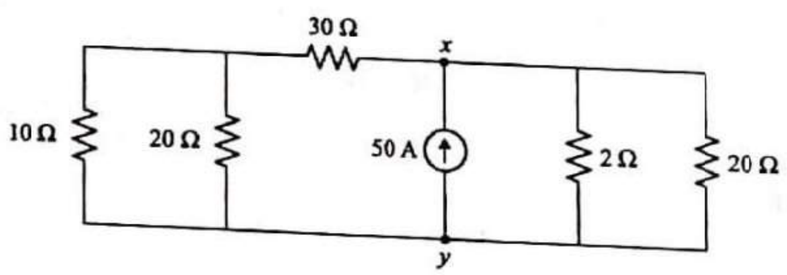

Fig. 27

Replacing the parallel combinations by their equivalent resistances we get

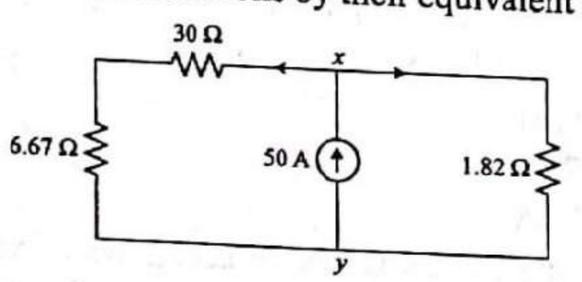

Fig. 28

In Fig. 28, the total current divides at node x, so by current division rule

$$I_{30\,\Omega} = \frac{50 \times 1.82}{1.82 + (30 + 6.67)}$$

$$I_{30\,\Omega} = 2.36 \text{ A } (\leftarrow)$$

Step IV: By superposition theorem, the resultant current through 30 Ω can be calculated as

$$I_{30\,\Omega} = 0.173 \text{ A } (\rightarrow) + 0.35 \text{ A } (\leftarrow) + 2.36 \text{ A } (\leftarrow)$$

$$I_{30\,\Omega} = 2.537 \text{ A } (\leftarrow)$$

(b) Refer Example 2.90 (page no. 316).

(c) Refer Example 3.15 (page no. 358).

May 2016

(REVISED COURSE)

Time: 3 Hours

[Total Marks: 80]

N.B.: 1. Question No. 1 is **compulsory**.

2. Solve any **three** questions from the remaining questions.

1. (a) A resistor for 5Ω is connected in series with a parallel combination of a number of resistors each of 5Ω. If the total resistance of the combination is 6Ω find the no. of resistors connected in parallel. **3**

(b) Use mesh analysis to find current through 10Ω in the ckt. shown. **3**

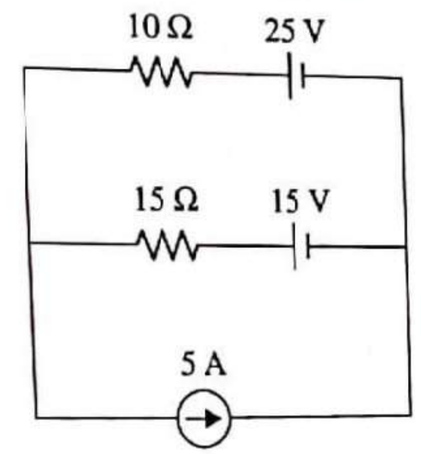

(c) An alternating voltage is represented by $v = 141.4 \sin 377\,t$.
Find (i) max-value (ii) frequency (iii) time period **3**

(d) What is the necessary condition for resonance in series circuit? Derive expression for resonance frequency. **3**

(e) What is the relationship between line and phase values in star and delta connected load? **2**

(f) Draw and explain the phasor diagram of 1-ϕ transformer on no load. **4**

(g) Define rectifier and state diff. types of it. **2**

Solution

(a) Let n be the required number of parallel resistors each of 5Ω & R_p be the equivalent resistance of parallel combination. Then

$$\frac{1}{R_p} = \frac{1}{5} + \frac{1}{5} + \frac{1}{5} + \cdots n \text{ times}$$

$$\frac{1}{R_p} = \frac{n}{5} \quad \text{So,} \quad R_p = \frac{5}{n}$$

The 5Ω resistor is connected in series with the parallel combination & the total resistance is 6Ω. So

$$5 + R_p = 6 \qquad \text{.... given}$$

$$5 + \frac{5}{n} = 6 \quad \text{So,} \quad n = 5$$

(b) Marking the separate mesh current for each mesh, we get the circuit as shown in Fig. 1.

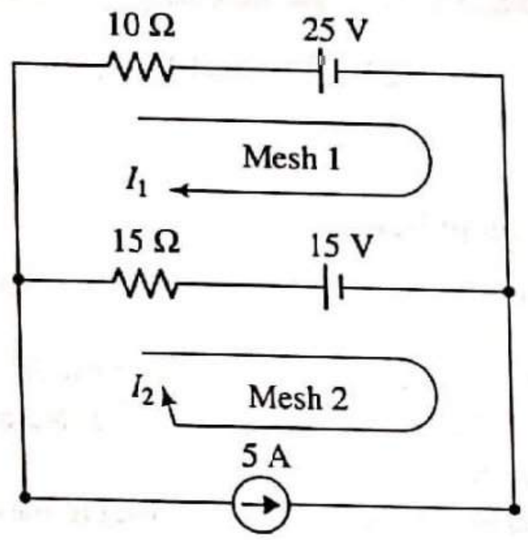

Fig. 1

Applying KVL to mesh 1,

$$-10I_1 - 25 + 15 - 15(I_1 - I_2) = 0$$

$$-25I_1 + 15I_2 = 10 \qquad \text{(i)}$$

From Mesh 2,

$$I_2 = -5 \qquad \text{(ii)}$$

From Eqs (i) & (ii), we get

$$I_1 = -3.4 \text{ A}$$

Hence $I_{10\Omega} = 3.4\text{A} (\leftarrow)$

(c) The equation of alternating voltage is given as

$$v = 141.4 \sin 377t$$

Comparing the given equation of alternating voltage with the standard form $v = V_m \sin \omega t$, we have

(i) Maximum value, $V_m = 141.4$ volts

(ii) Frequency, $f = \dfrac{\omega}{2\pi} = \dfrac{377}{2\pi} = 60\text{Hz}$

(iii) Time period, $T = \dfrac{1}{f} = \dfrac{1}{60} = 16.7 \times 10^{-3}\text{s} = 16.7\text{m sec}$

(d) Refer to Section 2.2.5.

(e) Refer to Section 3.3.1 & Section 3.3.2.

(f) Refer to Section 4.6.

(g) Refer to Section 5.11.

2. (a) Find node voltages. **6**

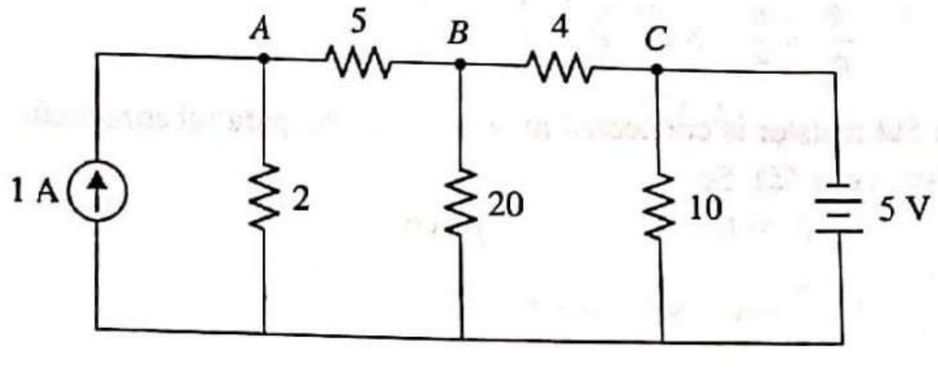

(b) In the circuit shown find

(i) the current I (ii) V_1 and V_2 (iii) Pf. Draw the phasor diagram. **8**

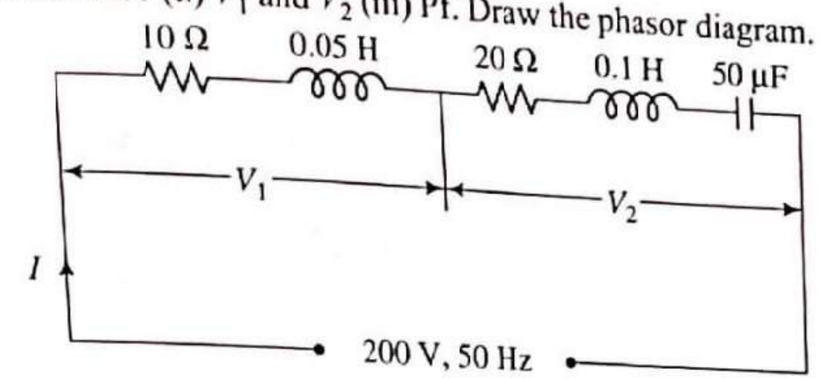

(c) A 150 KVA transformer has iron loss of 1.4 kW and full-load copper loss of 1.6 kW. Det. (i) the KVA load at maximum efficiency (ii) max. efficiency at 0.8 lagging Pf and (iii) efficiency at half load and 0.8 lagging Pf. **6**

Solution

(a) Assigning the unknown currents we get the circuit as shown in Fig. 2.

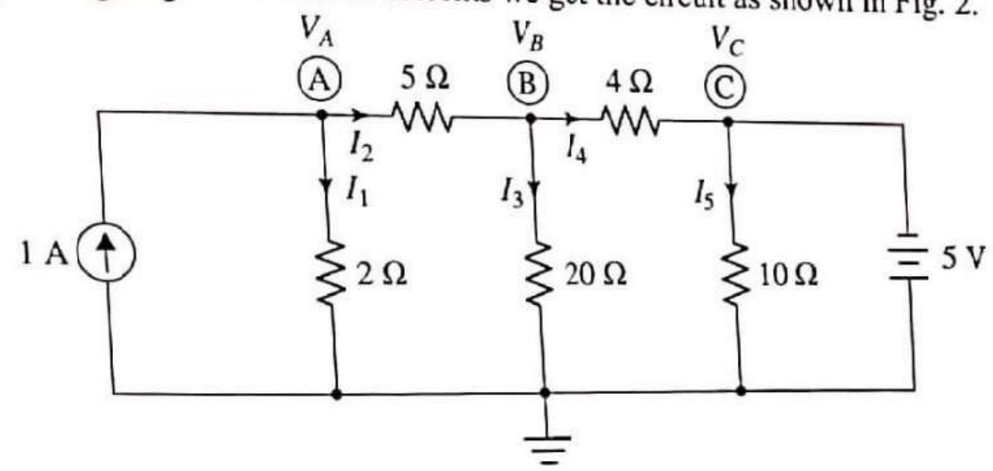

Fig. 2

From circuit diagram,

$$V_C = -5 \text{ volts} \qquad \text{(i)}$$

Applying KCL at Node A,

$$1 = I_1 + I_2$$

$$1 = \frac{V_A - 0}{2} + \frac{V_A - V_B}{5} \qquad \text{(ii)}$$

$$7V_A - 2V_B = 10$$

Applying KCL at Node B,

$$I_2 = I_3 + I_4$$

$$\frac{V_A - V_B}{5} = \frac{V_B - 0}{20} + \frac{V_B - V_C}{4} \qquad \text{(iii)}$$

$$-4V_A + 10V_B = -25$$

From Eqs (i), (ii) & (iii)

$$V_A = 0.806 \text{ volts}$$

$$V_B = -2.177 \text{ volts}$$

$$V_C = -5 \text{ Volt}$$

(b) Refer to Example 2.31.

(c) Given: $(\text{kVA})_{FL} = 150$, $W_i = 1.4$ kW, $[W_{Cu}]_{FL} = 1.6$ kW

(i) kVA laod at maximum efficiency

$$\text{kVA at } n_{max} = \text{full load kVA}\sqrt{\frac{W_i}{W_{Cu} \text{ at full load}}}$$

$$(\text{kVA})n_{max} = (\text{kVA})_{FL}\sqrt{\frac{W_i}{[W_{Cu}]_{FL}}} = 150\sqrt{\frac{1.4}{1.6}} = 140.314$$

(ii) Maximum efficiency at 0.8 lagging pf

Let at x times full load, the efficiency be maximum. The value of x can be calculated as

$$x = \sqrt{\frac{W_i}{[W_{Cu}]_{FL}}} = \sqrt{\frac{1.4}{1.6}} = 0.935$$

Now maximum efficiency can be calculated as

$$\%n_{max} = \frac{(x \times \text{full-load kVA} \times \text{pf})}{(x \times \text{full-load kVA} \times \text{pf}) + 2W_i} \times 100$$

$$= \frac{(0.935 \times 150 \times 0.8)}{(0.935 \times 150 \times 0.8) + 2 \times 1.4} \times 100$$

$$\% n_{max} = 98.42$$

(iii) Efficiency at half load & 0.8 lagging pf

Efficiency at any load can be calculated as

$$\%n = \frac{(x \times \text{full-load kVA} \times \text{pf})}{(x \times \text{full-load kVA} \times pf) + W_i + x^2[w_{Cu}]_{FL}} \times 100$$

where x = ratio of given load to full load

So, $x = 0.5$

$$\text{Now, } \%n = \frac{(0.5 \times 150 \times 0.8)}{(0.5 \times 150 \times 0.8) + 1.4 + (0.5)^2 \times 1.6} \times 100$$

$$\% n = 97.09$$

3. (a) A balanced three-phase load connected in delta, draws a power of 10 kW at 440 V at a Pf of 0.6 lead, find the values of circuit elements and reactive volt-ampers drawn. **8**

(b) The wattmeter reads iron losses in OC test and reads copper losses in SC test of a transformer. Justify. **6**

(c) What is meant by filter? **2**

(d) Draw and explain O/P characteristic of transistor in CE configuration. **4**

Solution

(a) Refer to Example 3.7. (b) Refer to Section 4.13.

(c) Refer to Section 5.12. (d) Refer to Section 5.10.9.

4. (a) Using source transformation tech. calculate voltage across 4Ω. **7**

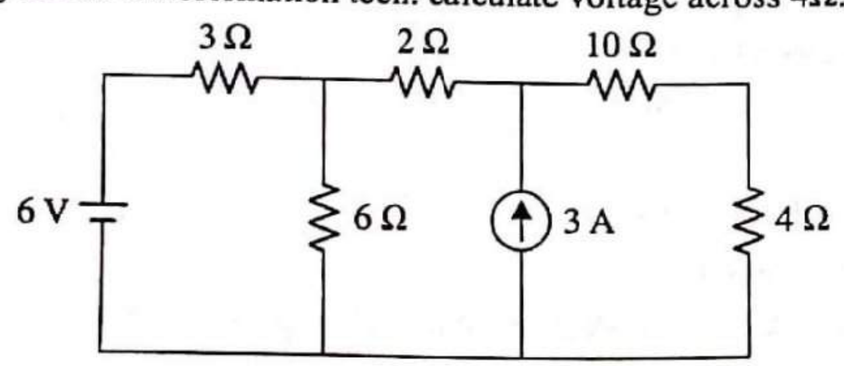

(b) Find the average and rms value of the waveform. **5**

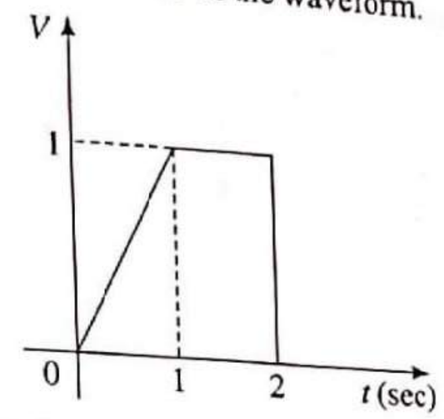

(c) The power in a 3-ϕ ckt is measured by two wattmeters. If the total power is 50kW and Pf is 0.6 lagging, find the reading of each wattmeter. **4**

(d) Explain the working of centre tapped full wave rectifier. **4**

Solution

(a) Converting series combination of voltage source of 6V and resistor of 3Ω into equivalent parallel combination of current source & resistance, we get the circuit as shown in Fig. 3.

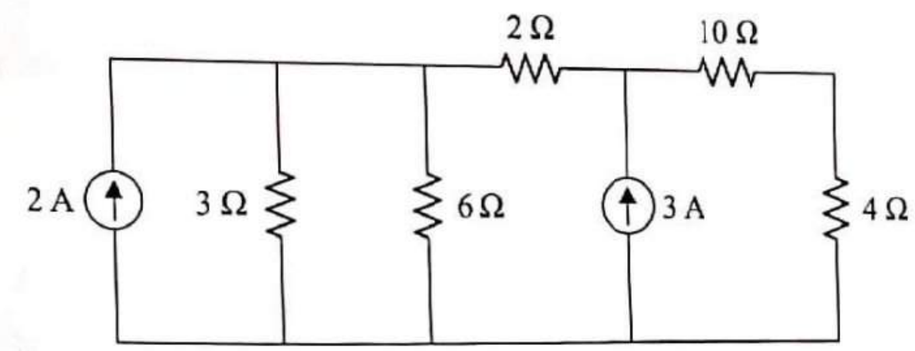

Fig. 3

In Fig. 3, 3Ω and 6Ω resistors are in parallel.

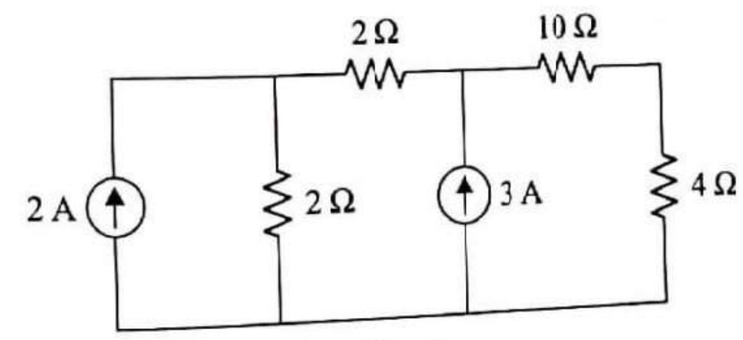

Fig. 4

Converting parallel combination of current source of 2A and resistor of 2Ω into equivalent series combination, we get Fig. 5.

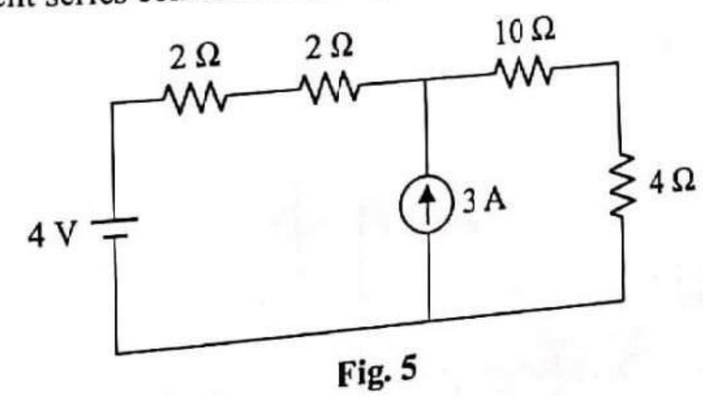

Fig. 5

In Fig. 5, two resistors each of 2Ω are in series.

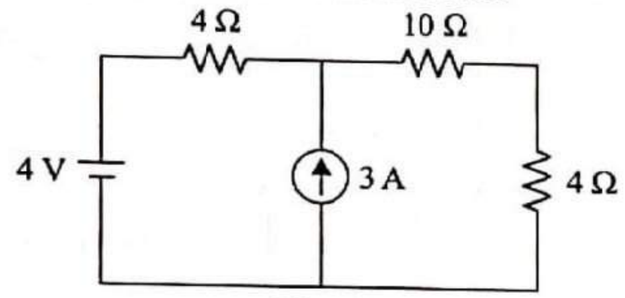

Fig. 6

Converting series combination of voltage source of 4V and resistor of 4Ω into equivalent parallel combination, we get Fig. 7.

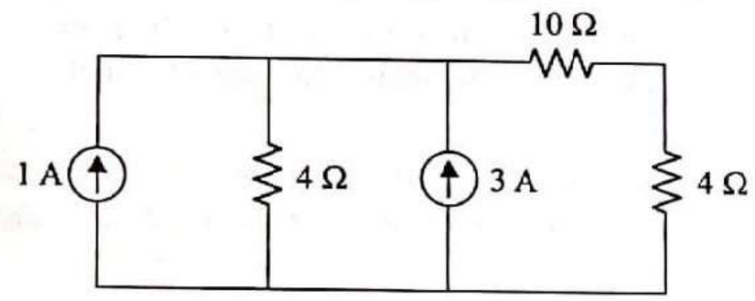

Fig. 7

By adding the parallel current sources, we get the circuit as shown in Fig. 8.

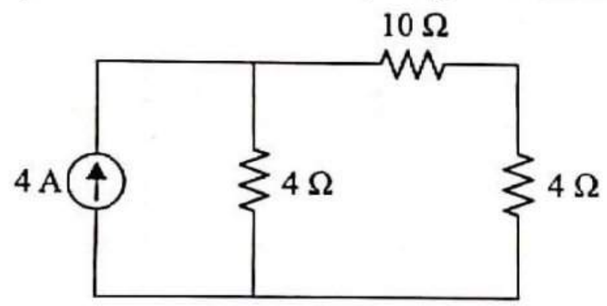

Fig. 8

Converting parallel combination of current source of 4A and resistor of 4Ω into equivalent series combination we get the circuit as shown in Fig. 9.

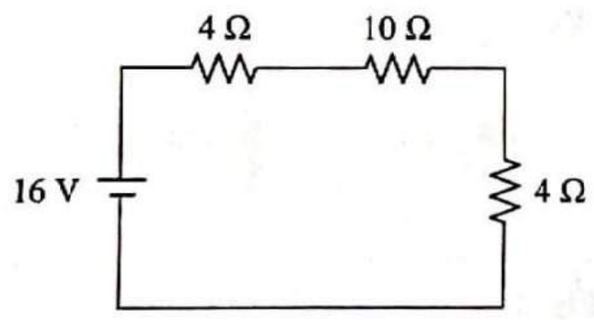

Fig. 9

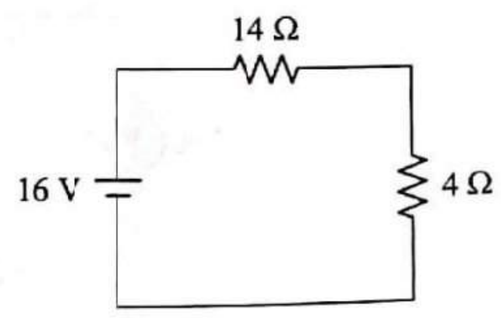

Fig. 10

From Fig. 10, applying voltage division rule,

$$V_{4\Omega} = \frac{16 \times 4}{4+4} = 3.56 \text{ volts}$$

(b)

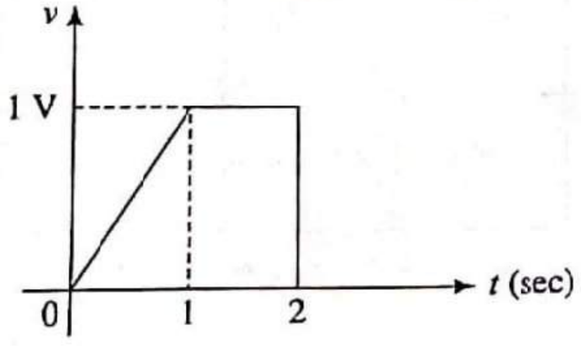

Fig. 11

The equations are as follows:

$v = t$ for interval $0 < t < 1$ $\quad$ $v = 1$ for interval $1 < t < 2$

So, $$V_{\text{average}} = \frac{\int_0^2 v\,dt}{2} = \frac{\int_0^1 v\,dt + \int_1^2 v\,dt}{2} = \frac{\int_0^1 t\,dt + \int_1^2 1\,dt}{2}$$

$$= \frac{1}{2}\left\{\int_0^1 t\,dt + \int_1^2 dt\right\} = \frac{1}{2}\left\{\left[\frac{t^2}{2}\right]_0^1 + [t]_1^2\right\}$$

$$= \frac{1}{2}\left\{\left[\frac{(1)^2}{2} - \frac{(0)^2}{2}\right] + [2-1]\right\} = 0.75 \text{ volts}$$

Now, rms value can be calculated as

$$V_{\text{RMS}} = \sqrt{\frac{\int_0^2 v^2\,dt}{2}}$$

$$V_{\text{RMS}}^2 = \frac{1}{2}\int_0^2 v^2\,dt = \frac{1}{2}\left\{\int_0^1 v^2\,dt + \int_1^2 v^2\,dt\right\} = \frac{1}{2}\left\{\int_0^1 (t)^2\,dt + \int_1^2 (1)^2\,dt\right\}$$

$$= \frac{1}{2}\left\{\left[\frac{t^3}{3}\right]_0^1 + [t]_1^2\right\} = \frac{1}{2}\left\{\left[\frac{1^3}{3} - \frac{0^3}{3}\right] + [2-1]\right\} = 0.6667 = 0.816 \text{ volts}$$

(c) Total power is 50 kW i.e. 50000 W

So, $W_1 + W_2 = 50000$ (i)

The Pf is given as 0.6 lagging

So, $\cos\phi = 0.6$ lagging

So, $\phi = \cos^{-1} 0.6 = 53.13$

Now, we have

$$\phi = \tan^{-1}\left\{\frac{\sqrt{3}(W_2 - W_1)}{W_1 + W_2}\right\} \qquad \text{So,} \quad 53.13 = \tan^{-1}\left\{\frac{\sqrt{3}(W_2 - W_1)}{50}\right\}$$

So, $W_2 - W_1 = 38490.02$ (ii)

From Eqs (i) & (ii)

$W_1 = 5.75$ kW $\qquad W_2 = 44.245$ kW

(d) Refer to Section 5.11.2.

5. (a) Find current through 30Ω using thevenin's theorem.

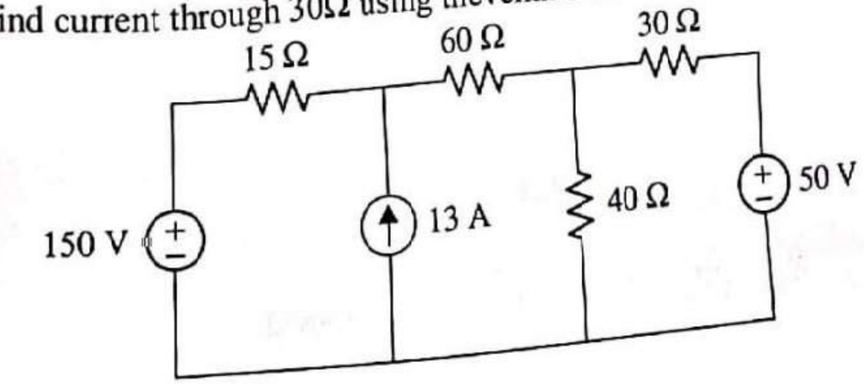

(b) For the shown ckt, find supply current, current in each branch and total Pf. 4

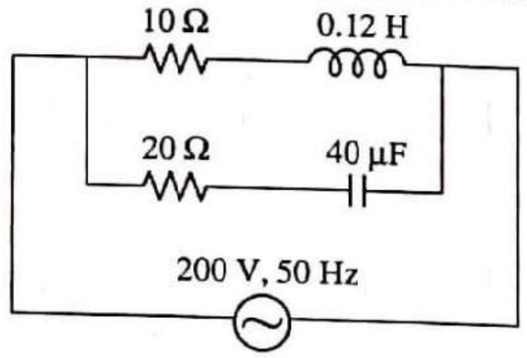

(c) A 1000/200 V, 50Hz, 1-phase transformer gave the following test results: 8

OC test (hv side):	1000V	0.24A	90W
SC test (hv side):	50V	5A	110W

Draw equivalent ckt of transformer referred to primary and secondary side.

Solution

(a) Refer to Example 1.75.

(b) Refer to Example 2.70.

(c) *Equivalent circuit referred to primary side:*

From oc test:

The test is conducted on primary side.

Given: $V_1 = 1000\text{V}$, $I_0 = 0.24\text{A}$, $W = 90\text{W}$

We have $W = V_1 I_0 \cos\phi_0$

So, $$\cos\phi_0 = \frac{W}{V_1 I_0} = \frac{90}{1000 \times 0.24} = 0.375 \text{ lagging}$$

or $\sin\phi_0 = 0.927$

The working component of no-load current,

$$I_W = I_0 \cos\phi_0 = 0.24 \times 0.375 = 0.09 \text{ A}$$

The magnetizing component of no-load current,

$$I_\mu = I_0 \sin\phi_0 = 0.24 \times 0.927 = 0.222 \text{ A}$$

$$R_0 = \frac{V_1}{I_W} = \frac{1000}{0.09} = 11111\,\Omega$$

$$X_0 = \frac{V_1}{I_\mu} = \frac{1000}{0.222} = 4504.5\,\Omega$$

From SC test:

The test is conducted on primary side.

Given: $V_{SC} = 50$ V, $I_1 = 5$A, $W = 110$ W

We have

$$W = I_1^2 R_{01} \quad \text{or} \quad R_{01} = \frac{W}{I_1^2} = \frac{110}{5^2} = 4.4\,\Omega$$

$$Z_{01} = \frac{V_{SC}}{I_1} = \frac{50}{5} = 10\,\Omega$$

$$X_{01} = \sqrt{Z_{01}^2 - R_{01}^2} = \sqrt{10^2 - 4.4^2} = 8.98\,\Omega$$

So, equivalent circuit referred to primary is shown in Fig. 12.

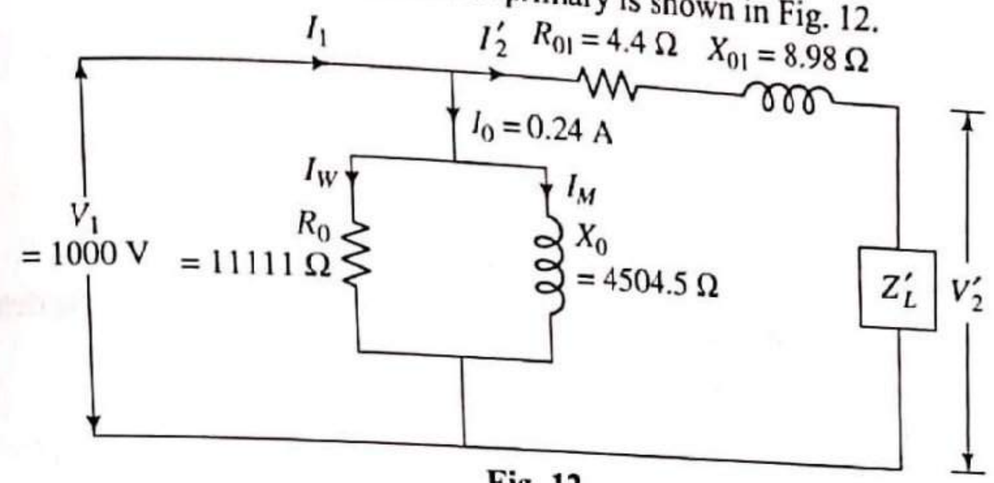

Fig. 12

Equivalent circuit referred to secondary side:

We need to transfer R_0, X_0, R_{01} & X_{01} to secondary side.

Now transformation ratio, $K = \dfrac{E_2}{E_1} = \dfrac{200}{1000} = 0.2$

So, when R_0 is referred (transferred) to secondary side its value becomes

$$= K^2 \times R_0 = (0.2)^2 \times 11111 = 444.44\,\Omega$$

Similarly, when X_0 is referred to secondary side its value becomes

$$= K^2 \times X_0 = (0.2)^2 \times 4504.5 = 180.18\,\Omega$$

When R_{01} is transferred to secondary side, its value becomes

$$= K^2 \times R_{01} = (0.2)^2 \times 4.4 = 0.176\,\Omega$$

When X_{01} is transferred to secondary side, its value becomes

$$= K^2 \times X_{01} = (0.2)^2 \times 8.98 = 0.3592\,\Omega$$

So, the equivalent circuit referred to secondary side becomes as shown in Fig. 13.

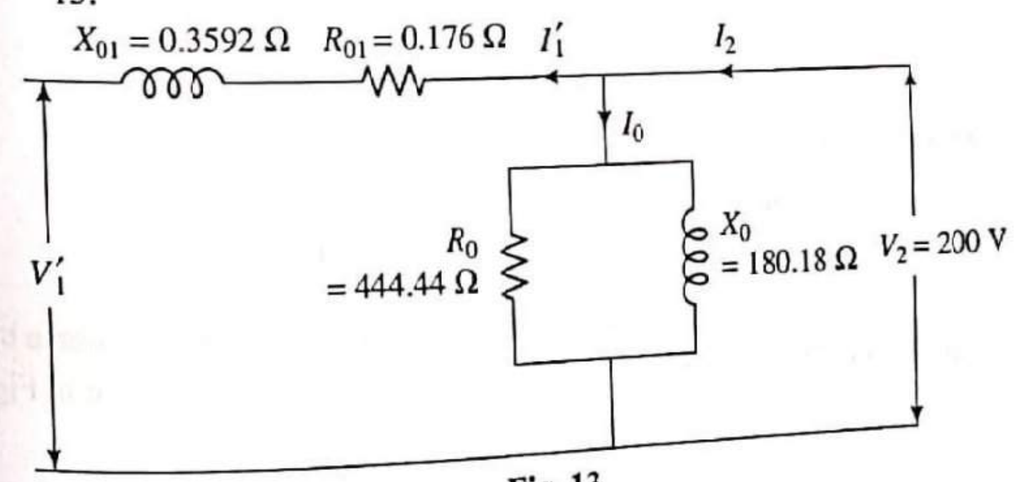

Fig. 13

7

6. (a) Using superposition theorem, find the voltage across 4kΩ.

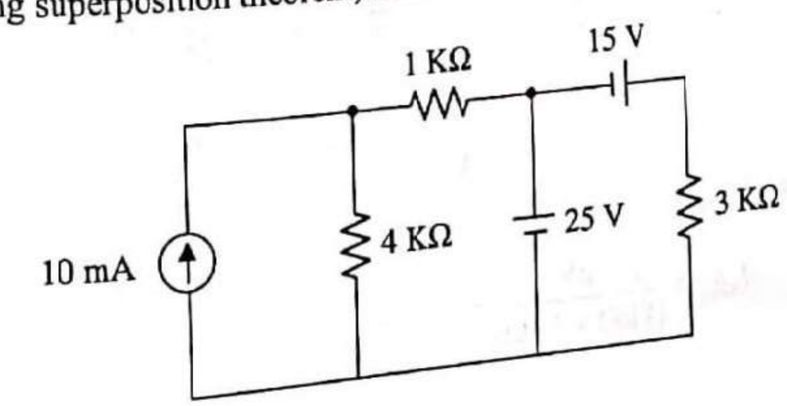

(b) A series R-L-C circuit consists of R = 1000Ω, L = 100 mH and C = 10 μF. The applied voltage across the circuit is 100 V. 7

(i) Find the resonance freq. of the ckt.

(ii) Find Q of the ckt at resonant freq.

(iii) At what angular freq. do the half power points occur.

(iv) Calculate the bandwidth of the ckt.

(c) Show that the total power and Pf. in a 3-ϕ balanced system can be determined using two wattmeter method. 6

Solution

(a) **Step I:** Considering 10 mA source acting alone, replacing 25V & 15V sources by short circuits, we obtain Fig. 14.

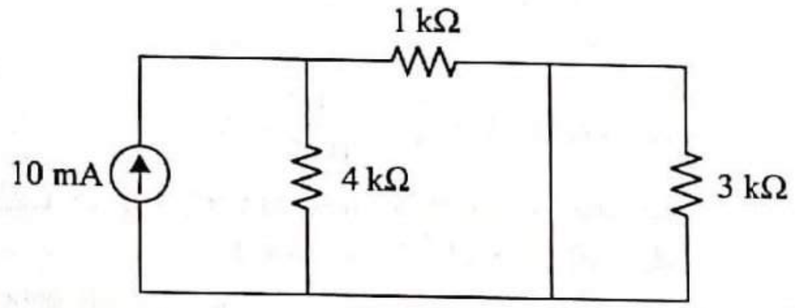

Fig. 14

In Fig. 14, the 3 kΩ resistor gets short circuited, so it can be removed.

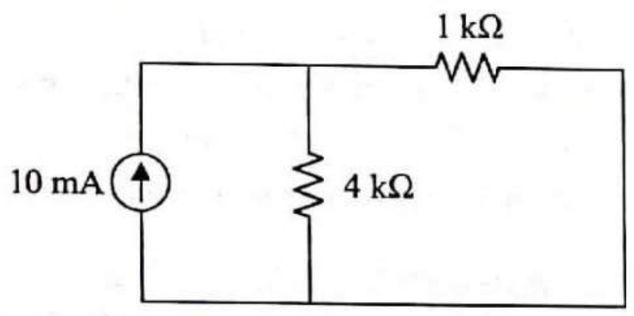

Fig. 15

From Fig. 15, by CDR

$$I_{4k\Omega} = \frac{10\text{ mA} \times 1\text{ k}\Omega}{4\text{ k}\Omega + 1\text{ k}\Omega} \qquad I_{4\text{ k}\Omega} = 2\text{ mA}(\downarrow)$$

Step II: Considering 25 V source acting alone, replacing 10 mA source by open circuit and 15V source by short circuit, we get the circuit as shown in Fig. 16.

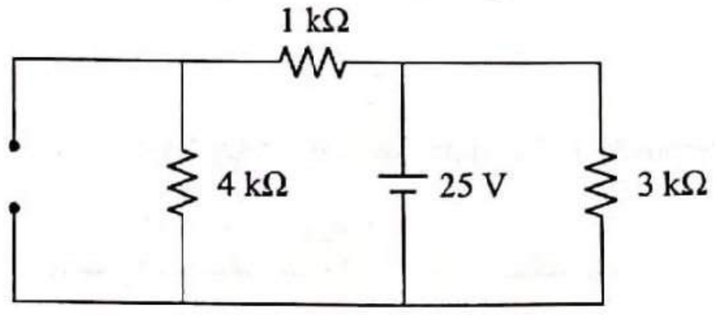

Fig. 16

By Ohm's law,

$$I_{4k\Omega} = \frac{25}{(1\text{ k}\Omega + 4\text{ k}\Omega)} = 5\text{mA}(\downarrow)$$

Step III: When 15 V source acting alone, replacing 10 mA source by open circuit & 25 V source by short circuit.

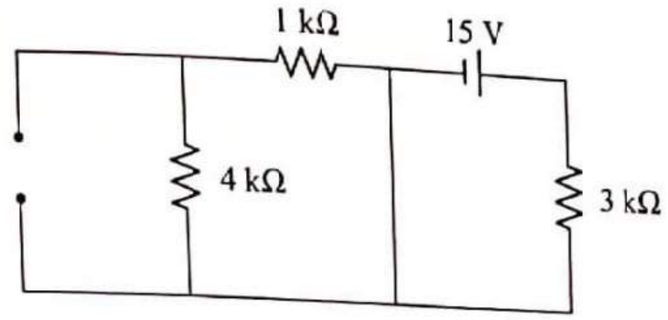

Fig. 17

In Fig. 17, the branch containing resistors 4 kΩ & 1 kΩ gets short circuited, so

$$I_{4\Omega} = 0\text{A}$$

Now, by superposition principle, the resultant current flowing through the 4 kΩ resistor is given as

$$I_{4\Omega} = 2\text{ mA}(\downarrow) + 5\text{ mA}(\downarrow) + 0\text{A}(\downarrow)$$

So, $I_{4\Omega} = 7\text{ mA}(\downarrow)$

(b) Given: $R = 1000\ \Omega$, $L = 100$ mH, $C = 10\ \mu$F, $V = 100$ V

(i) Resonance frequency,

$$f_r = \frac{1}{2\pi\sqrt{LC}} = \frac{1}{2\pi\sqrt{100\times10^{-3}\times10\times10^{-6}}} = 159.15\text{ Hz}$$

(ii) Q-factor $= \frac{1}{R}\sqrt{\frac{L}{C}} = \frac{1}{1000}\sqrt{\frac{100\times10^{-3}}{10\times10^{-6}}} = 0.1$

(iii) Resonance frequency in rad/sec

$$\omega_r = \frac{1}{\sqrt{LC}} = \frac{1}{\sqrt{100\times10^{-3}\times10\times10^{-6}}} = 1000\text{ rad/sec}$$

Bandwith (BW) can be calculated as

$$\text{BW} = \frac{R}{L} = \frac{1000}{10\times10^{-3}} = 10000\text{ rad/sec}$$

Let ω_1 & ω_2 be angular frequencies at which half power points occurs.

$$\omega_1 = \omega_r - \frac{\text{BW}}{2} = 1000 - \frac{10000}{2} = -4000\text{ rad/sec}$$

$$\text{Now, } \omega_2 = \omega_r + \frac{\text{BW}}{2} = 1000 + \frac{10000}{2} = 6000\text{ rad/sec}$$

(c) Refer to Section 3.6.2.

December 2016

Time: 3 Hours

[Total Marks : 80]

N.B.: (1) Question No. 1 is compulsory.
(2) Answer any three questions from remaining five questions.
(3) Figures to the right side indicate full marks.
(4) Assume suitable data if required.

1. (a) State Maximum Power Transfer Theorem. **2**

(b) Derive the formula to convert a delta circuit into an equivalent star. **4**

(c) Define average value and RMS value of an alternating quantity. **4**

(d) Prove that power in a 3-phase delta connected system is 3 times that of a star connected system. **4**

(e) Explain the working principle of a single phase transformer. **4**

(f) What is the use of commutator in a DC machine? **2**

Solution

(a) Refer to Section 1.19.

(b) Refer to Section 1.13.

(c) Refer to Section 2.1.6.

(d) Assume that impedance of each phase is ($Z_{ph} \angle\phi$) and line voltage in both star (Y) connected and delta (Δ) connected systems is V_L. Now, power in star connected system (P_Y) is given by

$$P_Y = \sqrt{3}\, V_L I_L \cos\phi$$

$$= \sqrt{3}\, V_L I_{ph} \cos\phi \qquad (\because I_L = I_{ph})$$

$$= \sqrt{3}\, V_L \frac{V_{ph}}{Z_{ph}} \cos\phi \qquad \left(\because I_{ph} = \frac{V_{ph}}{Z_{ph}}\right)$$

$$= \sqrt{3}\, V_L \frac{V_L}{\sqrt{3} Z_{ph}} \cos\phi \qquad \left(\because V_{ph} = \frac{V_L}{\sqrt{3}}\right)$$

So, $$P_Y = \frac{V_L^2 \cos\phi}{Z_{ph}} \qquad \text{(i)}$$

Now, power in delta connected system (P_Δ) is given by

$$P_\Delta = \sqrt{3}\, V_L I_L \cos\phi$$

$$= \sqrt{3}\, V_L \sqrt{3}\, I_{ph} \cos\phi \qquad (\because I_L = \sqrt{3}\, I_{ph})$$

$$= 3\, V_L I_{ph} \cos\phi$$

$$= 3 V_L \frac{V_{ph}}{Z_{ph}} \cos\phi \qquad \left(\because I_{ph} = \frac{V_{ph}}{Z_{ph}}\right)$$

$$= 3 V_L \frac{V_L}{Z_{ph}} \cos\phi \qquad (\because V_{ph} = V_L)$$

So, $$P_\Delta = 3 \frac{V_L^2 \cos\phi}{Z_{ph}} \qquad \text{(ii)}$$

From Eqs (i) and (ii), it is clear that

$$P_\Delta = 3 P_Y$$

(e) Refer to Section 4.2.

(f) Refer to Section 5.2.

2. (a) Obtain current through 1 Ω resistance by using Superposition theorem, in Fig. 2A. **10**

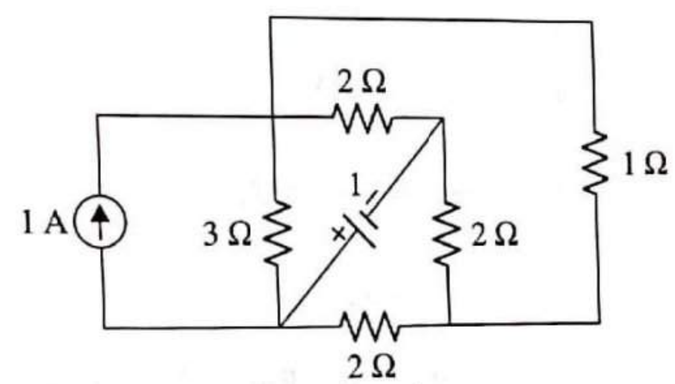

Fig. 2A

(b) A coil is connected across a non-inductive resistance of 120 Ω. When a 240 V, 50 Hz supply is applied to this circuit the coil draws a current 5 A and total current is 6 A. Determine the power and power factor of **10**

(i) the coil (ii) the whole circuit

Solution

(a) **Step I:** Consider 1 A source acting alone, replacing 1 V source by short circuit, we get the following circuit:

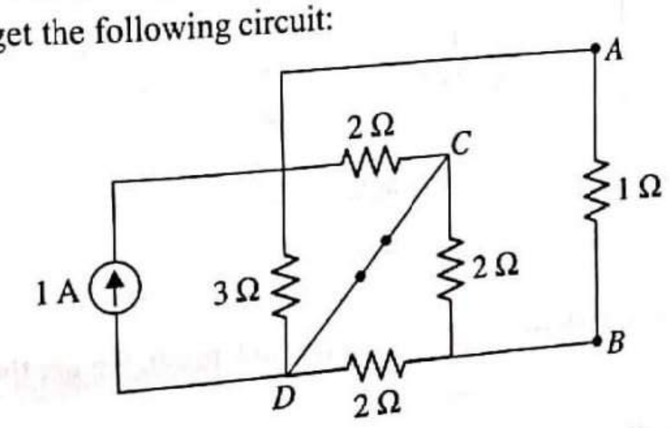

Fig. 1

In Fig. 1, Node C and Node D are same. By shorting them we get the following circuit.

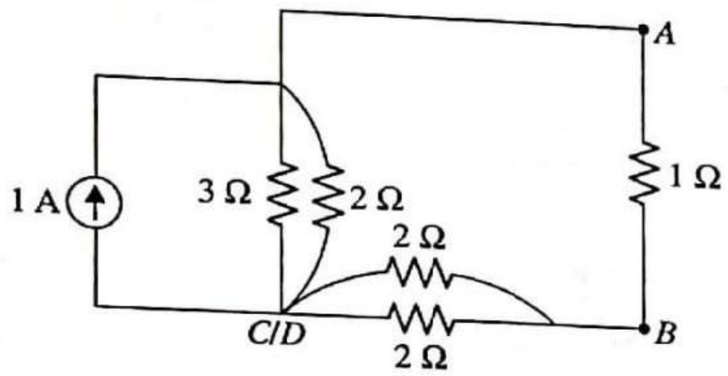

Fig. 2

In Fig. 2, replacing the parallel combinations by their equivalent resistances, we get the circuit as shown in Fig. 3.

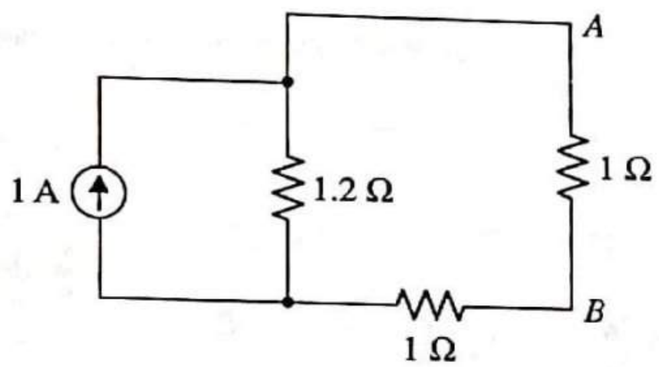

Fig. 3

In Fig. 3, by applying Current Division Rule (CDR), we get

$$I_{1\,\Omega} = \frac{1\times 1.2}{1.2+(1+1)} = 0.375\text{ A}\,(\downarrow)$$

Step II: Consider 1 V source acting alone, replacing 1 A source by open circuit, we get the circuit as shown in Fig. 4.

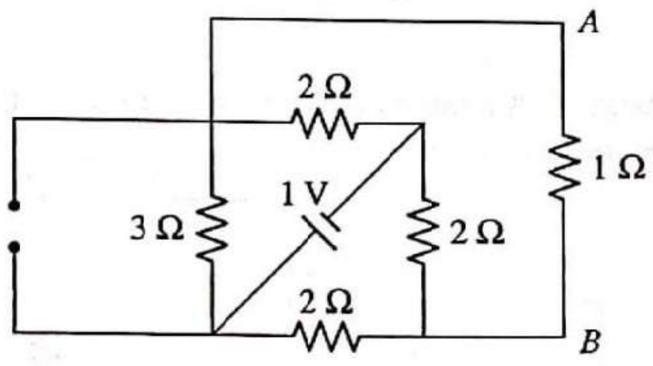

Fig. 4

Assuming the separate mesh current for each mesh, we get the circuit as shown in Fig. 5.

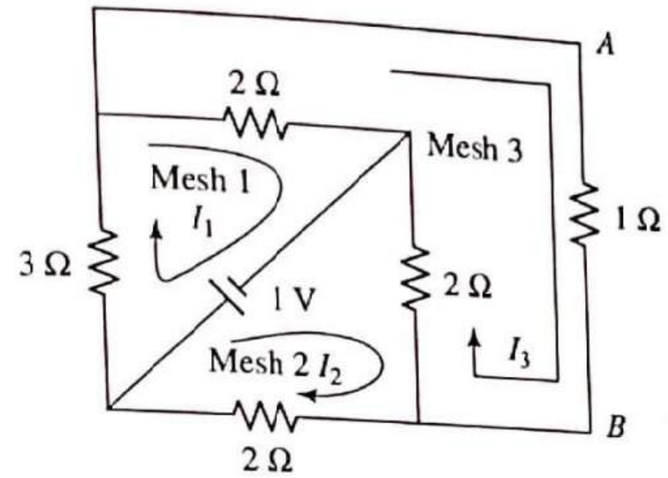

Fig. 5

Applying KVL to Mesh 1, we get

$$-2(I_1 - I_3) + 1 - 3I_1 = 0$$

$$-5I_1 + 2I_3 = -1 \qquad \text{(i)}$$

Applying KVL to Mesh 2, we get

$$-1 - 2(I_2 - I_3) - 2I_2 = 0$$

$$-4I_2 + 2I_3 = 1 \qquad \text{(ii)}$$

Applying KVL to Mesh 3, we get

$$-1I_3 - 2(I_3 - I_2) - 2(I_3 - I_1) = 0$$

$$2I_1 + 2I_2 - 5I_3 = 0 \qquad \text{(iii)}$$

By solving Eqs (i), (ii) and (iii), we get

$$I_3 = -0.031\text{ A}$$

i.e., $I_{1\,\Omega} = -0.031\text{ A}(\downarrow)$

Step III: According to superposition theorem, resultant current through 1 Ω resistor is given as

$$I_{1\,\Omega} = 0.375\text{ A}(\downarrow) + (-0.031\text{ A})(\downarrow) = 0.344\text{ A}(\downarrow)$$

(b) The conditions in the example are shown in Fig. 6.

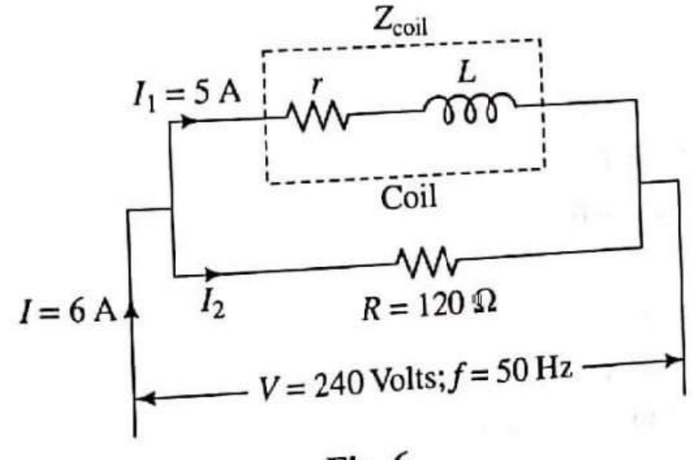

Fig. 6

Let Z_{coil} be the impedance of the coil.

Let phase angle of the coil be ϕ_L, i.e., current I_1 lags to V by ϕ_L° ($\phi_L^\circ < 90$).

Let ϕ° be the phase angle of the circuit. As circuit is inductive, I lags to V by ϕ°.

From circuit diagram, current I_2 is in phase with V and can be calculated as

$$I_2 = \frac{V}{R} = \frac{240}{120} = 2\text{A}$$

and $\quad \bar{I} = \bar{I}_1 + \bar{I}_2$

Taking V as reference, the phasor diagram can be drawn (not in scale) as shown in Fig. 7.

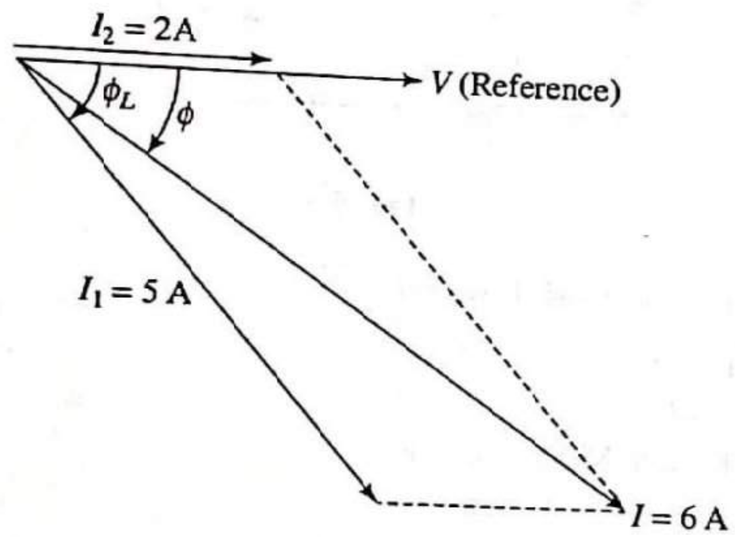

Fig. 7

From phasor diagram,

$$I = \sqrt{I_1^2 + I_2^2 + 2I_1I_2\cos\phi_L}$$

So, $\quad 6 = \sqrt{2^2 + 5^2 + 2\times2\times5\cos\phi_L}$

$\therefore$ Power factor of the coil, $\cos\phi_L = 0.35$ lagging

Now, Power of coil, $P_{\text{coil}} = V \times I_2 \times \cos\phi_L$

$$= 240 \times 5 \times 0.35$$

$$= 420 \text{ Watt}$$

Now, power consumed by resistor, $P_R = I_2^2 \times R$

$$= 2^2 \times 120$$

$$= 480 \text{ Watt}$$

So, total power absorbed by the circuit,

$$P = P_{\text{coil}} + P_R$$

$$= 420 + 480$$

$$= 900 \text{ W}$$

We know that

$$P = VI\cos\phi$$

So, $\quad 900 = 240 \times 6 \times \cos\phi$

$$\cos\phi = 0.625$$

i.e., Power factor of the circuit = 0.625 lagging

3. (a) Obtain Norton's equivalent circuit of the network shown in Fig. 3A, across the terminals A and B. **10**

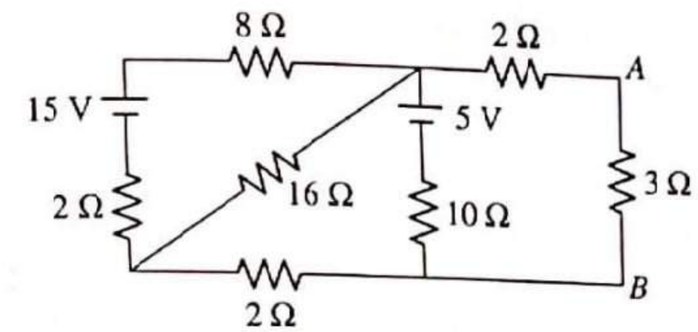

Fig. 3A

(b) A series RLC circuit, if ω_0 is the resonant frequency, ω_1 and ω_2 are the half power frequencies, prove that $\omega_0 = \sqrt{(\omega_1\omega_2)}$ **5**

(c) Derive the equivalent circuit of a 1-Phase transformer. **5**

Solution

(a) **Step I:** *Calculation of I_N*

Removing the load resistance from the network and short circuiting the load terminals A and B, we get the modified circuit as shown in Fig. 8.

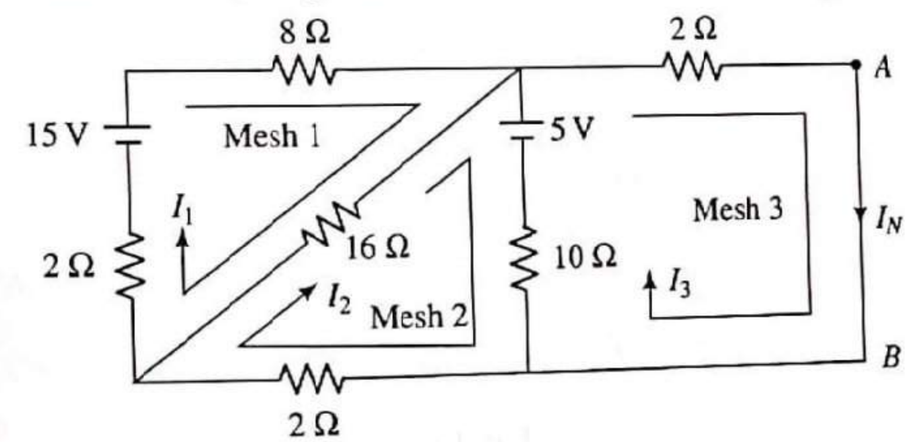

Fig. 8

In Fig. 8, current flowing through the short circuit placed across the load terminals A and B is called Norton's current I_N. This current can be calculated by Mesh analysis as follows:

Applying KVL to Mesh 1,

$$-2I_1 + 15 - 8I_1 - 16(I_1 - I_2) = 0 \qquad \text{(i)}$$

$$-26I_1 + 16I_2 = -15$$

Applying KVL to Mesh 2

$$-5 - 10(I_2 - I_3) - 2I_2 - 16(I_2 - I_1) = 0 \qquad \text{(ii)}$$

$$16I_1 - 28I_2 + 10I_3 = 5$$

Applying KVL to Mesh 3

$$-2I_3 - 10(I_3 - I_2) + 5 = 0 \qquad \text{(iii)}$$

$$10I_2 - 12I_3 = -5$$

From Eqs (i), (ii) and (iii), we get

$I_3 = 1.129$ A from A to B

i.e., $I_N = 1.129\ \text{A}(\downarrow)$

Step II: *Calculation of R_N*

Removing the load resistance from the network and replacing the voltage sources by short circuits, we get the network as shown in Fig. 9.

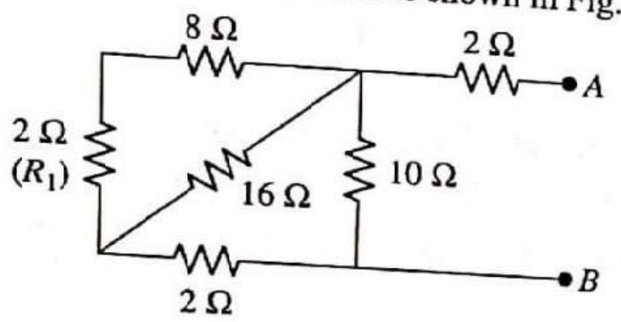

Fig. 9

In Fig. 9, equivalent resistance across the terminals A and B is called Norton's resistance R_N.

In Fig. 9, resistors 8 Ω and 2 Ω (R_1) are in series.

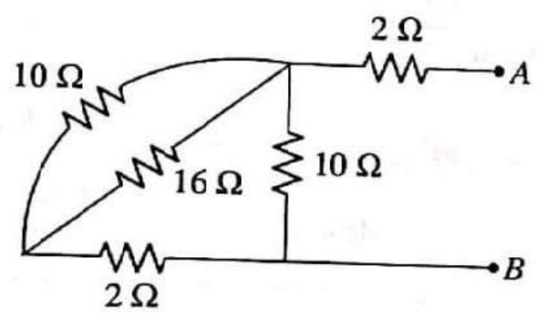

Fig. 10

In Fig. 10, 10 Ω and 16 Ω resistors are in parallel. So, 10 Ω||16 Ω = 6.15 Ω.

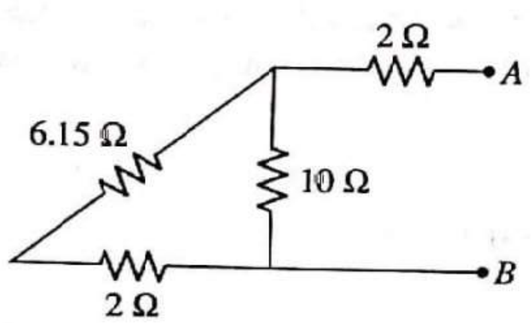

Fig. 11

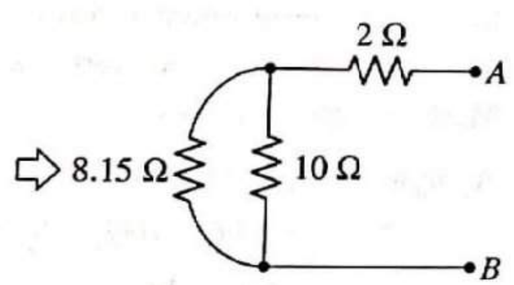

Fig. 12

From Fig. 12,

$$R_N = R_{AB}$$
$$= (8.15 \| 10) + 2$$
$$= 4.49 + 2$$
$$= 6.49\ \Omega$$

Step 3: Norton's equivalent circuit (Refer Fig. 13):

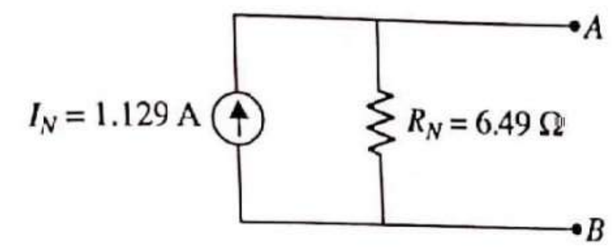

Fig. 13

(b) The resonance curve of the series R-L-C circuit is shown in Fig. 14. At resonance frequency (ω_0), the circuit current is maximum, i.e., I_r. At lower cut-off frequency (ω_1) and upper cut-off frequency (ω_2) the circuit current is equal to $\frac{I_r}{\sqrt{2}}$ or $0.707\ I_r$.

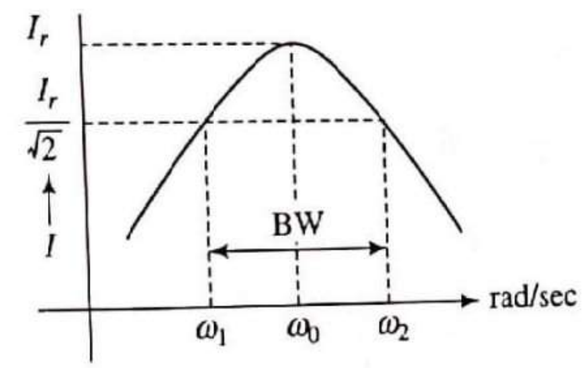

Fig. 14

At any frequency, the circuit current can be calculated as

Circuit current, $I = \dfrac{V}{\sqrt{R^2 + (X_L - X_C)^2}}$

So, $$I = \frac{V}{\sqrt{R^2 + \left(\omega_L - \frac{1}{\omega_C}\right)^2}}$$

At cut-off frequencies, the circuit current is equal to $\frac{I_r}{\sqrt{2}}$, while I_r is the current at resonance.

So, at cut-off frequencies, i.e., half-power points, we have

$$\frac{V}{\sqrt{R^2 + \left(\omega_L - \frac{1}{\omega_C}\right)^2}} = \frac{I_r}{\sqrt{2}}$$

So, $$\frac{V}{\sqrt{R^2 + \left(\omega_L - \frac{1}{\omega_C}\right)^2}} = \frac{V}{\sqrt{2}R} \qquad \left(\because I_r = \frac{V}{R}\right)$$

So, $\sqrt{R^2+\left(\omega_L-\frac{1}{\omega_C}\right)^2}=\sqrt{2}R$

$$R^2+\left(\omega_L-\frac{1}{\omega_C}\right)^2=2R^2$$

$$\left(\omega_L-\frac{1}{\omega_C}\right)^2=R^2$$

So, $\omega_L-\frac{1}{\omega_C}=\pm R$ (i)

From Eq. (i), we can find out two values of frequencies which are ω_1 and ω_2.

$\therefore$ $\omega_2 L-\frac{1}{\omega_2 C}=+R$ (ii)

and $\omega_1 L-\frac{1}{\omega_1 C}=-R$ (iii)

Adding Eqs (ii) and (iii)

$$(\omega_1+\omega_2)L-\left(\frac{1}{\omega_1}-\frac{1}{\omega_2}\right)\frac{1}{C}=0$$

$$(\omega_1+\omega_2)L=\frac{\omega_1+\omega_2}{\omega_1\omega_2}\cdot\frac{1}{C}$$

$\therefore$ $\omega_1\omega_2=\frac{1}{LC}$

$\omega_1\omega_2=\omega_0^2$ $\left(\because \omega_0=\frac{1}{\sqrt{LC}}\right)$

Thus $\omega_0=\sqrt{\omega_1\omega_2}$

(c) Refer to Section 4.12.

4. (a) Obtain current through 15 Ω resistance by nodal analysis in Fig. 4A. Take reference node as marked. **10**

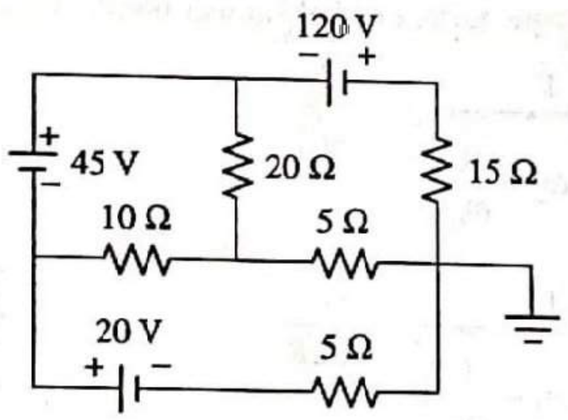

Fig. 4A

(b) In a balanced 3 phase, star connected system, a wattmeter is connected with its current coil in series with Y line and pressure coil between Y and R lines. Draw a neat circuit diagram showing the above wattmeter connection. Assuming a lagging power factor, draw the corresponding phasor diagram and derive the wattmeter reading in terms of line voltage, line current and phase angle. **10**

Solution

(a) Marking the different nodes and assuming the unknown currents, we obtain the following circuit:

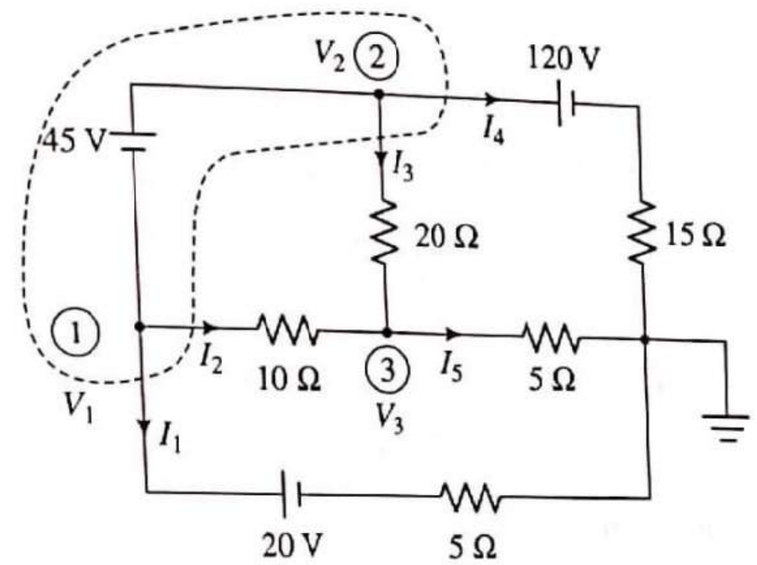

Fig. 15

Node 1 and Node 2 form the supernode.

So, $V_1+45=V_2$

So, $V_1-V_2=-45$ (i)

Applying KCL at supernode, we get

$$I_1+I_2+I_3+I_4=0$$

$$\frac{(V_1-20)-0}{5}+\frac{V_1-V_3}{10}+\frac{V_2-V_3}{20}+\frac{(V_2-120)-0}{15}=0$$

$$18V_1+7V_2-9V_3=720 \quad \text{(ii)}$$

Applying KCL at Node 3, we get

$$I_2+I_3=I_5$$

$$\frac{V_1-V_3}{10}+\frac{V_2-V_3}{20}=\frac{V_3-0}{5}$$

$$-2V_1-V_2+7V_3=0 \quad \text{(iii)}$$

By solving Eqs (i), (ii) and (iii), we get

$V_1=21.89$ volts; $V_2=66.89$ volts and $V_3=15.81$ volts

Now, $I_{15\,\Omega}=\frac{(V_2-120)-0}{15}$ A (↓)

$$= \frac{66.89 - 120}{15} \text{ A } (\downarrow)$$

$$= -3.54 \text{ A } (\downarrow)$$

$$= 3.54 \text{ A } (\uparrow)$$

(b) The circuit diagram with wattmeter connection is shown in Fig. 16.

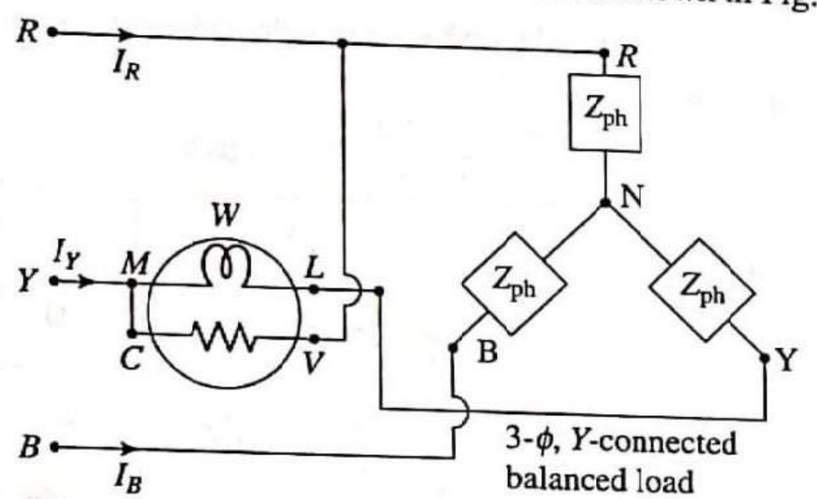

Fig. 16

From circuit diagram, wattmeter reading W is given as

$$W = V_{YR} \times I_Y \times \cos \text{ (angle between } \bar{V}_{YR} \text{ and } \bar{I}_Y \text{)}$$

As load is balanced, all the three phase voltages V_{RN}, V_{YN} and V_{BN} are equal in magnitude ($= V_{ph}$) and 120° apart. The three line voltages V_{RY}, V_{YB} and V_{BR} are also equal in magnitude ($= V_L$) and 120° apart. The three line currents I_R, I_Y and I_B are also equal in magnitude ($= I_L$) and 120° displaced. As power factor is lagging, phase current lags to the respective phase voltage by $\phi°$ ($\phi < 90$).

Phasor diagram: Taking V_{RN} as reference

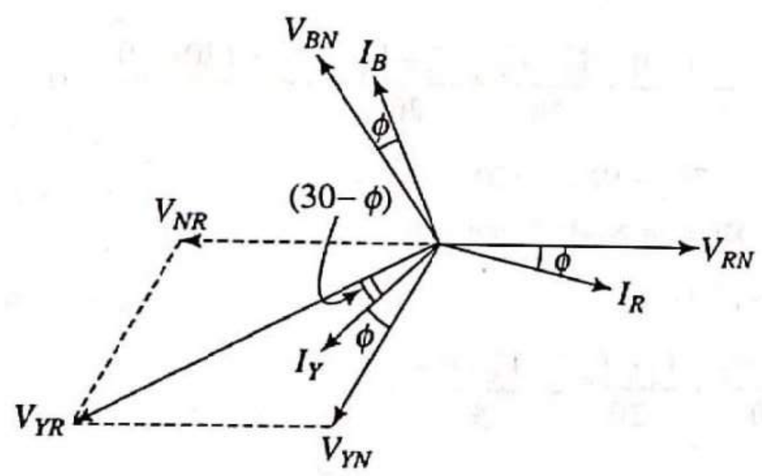

The line voltage V_{YR} can be calculated as

$$\bar{V}_{YR} = \bar{V}_{YN} + \bar{V}_{NR}$$

From the phasor diagram, it is clear that the angle between V_{YR} and I_Y is $(30 - \phi)$.

So, wattmeter reading, $W = V_{YR} I_R \cos (30 - \phi)$

As $V_{YR} = V_L$ and $I_R = I_L$

Wattmeter reading, $W = V_L I_L \cos (30 - \phi)$

5. (a) Obtain current through 60 Ω resistance by Mesh analysis in Fig. 5A. **6**

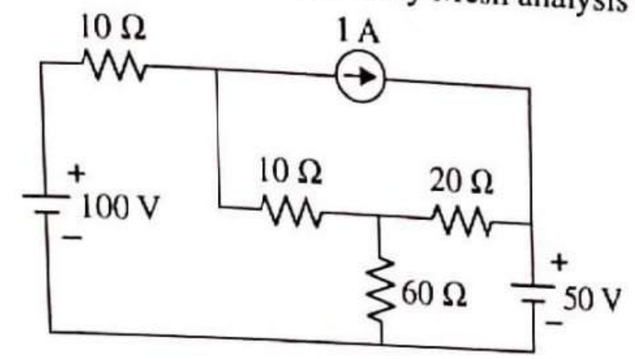

Fig. 5A

(b) Develop the phasor diagram of a single transformer supplying to a resistance load. **8**

(c) Derive the emf equation of a DC generator. **6**

Solution

(a) Marking the different meshes and assuming the separate mesh current for each mesh, we get the following circuit:

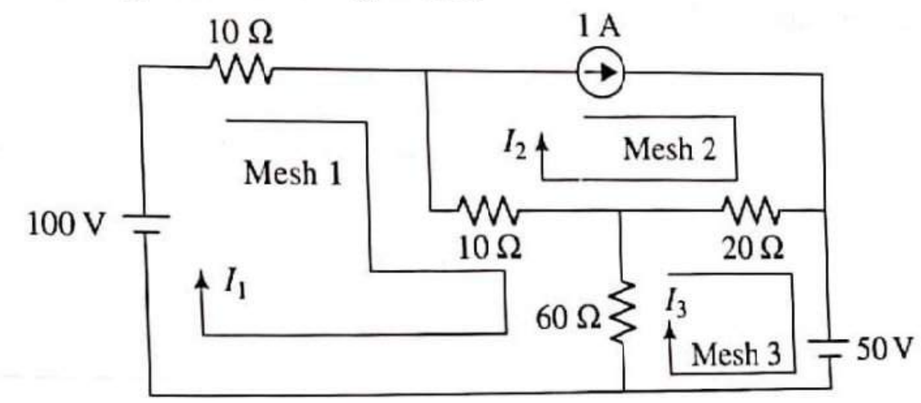

Fig. 17

Applying KVL to Mesh 1, we get

$$100 - 10I_1 - 10(I_1 - I_2) - 60(I_1 - I_3) = 0$$

$$-80 I_1 + 10 I_2 + 60 I_3 = -100 \quad \text{(i)}$$

From Mesh 2,

$$I_2 = 1 \text{ A} \quad \text{(ii)}$$

Applying KVL to Mesh 3, we get

$$-20(I_3 - I_2) - 50 - 60(I_3 - I_1) = 0$$

$$60I_1 + 20I_2 - 80I_3 = 50 \quad \text{(iii)}$$

Solving Eqs (i), (ii) and (iii), we get

$$I_1 = 2.5 \text{ A}; I_2 = 1 \text{ A and } I_3 = 1.5 \text{ A}$$

Now, $I_{60\,\Omega} = (I_1 - I_3) \text{ A}(\downarrow)$

$$= (2.5 - 1.5) \text{ A } (\downarrow)$$

$$= 1.5 \text{ A}(\downarrow)$$

(b) Refer to Section 4.10.2.

(c) Refer to Section 5.4.

6. (a) A resistor and a pure reactance are connected in series across a 150 V ac supply. When the frequency is 40 Hz, the circuit draws 5 A. When the frequency is increased to 50 Hz, the circuit draws 6 A. Find the value of resistance and the element value of the reactance. Also find the power drawn in the second case. **10**

(b) A single phase 10 KVA, 500 V/250 V, 50 Hz transformer has the following constants. **10**

Resistance : primary = 0.2 ohms, secondary = 0.5 ohms

Reactance : primary = 0.4 ohms, secondary = 0.1 ohms

Resistance of equivalent exciting current w.r.t. primary = 1500 ohms

Reactance of equivalent exciting circuit w.r.t. primary = 750 ohms

What will be the reading of the instruments placed in primary side when the transformer is connected for OC and SC tests?

Solution

(a) As current increases with increase in frequency, the circuit has to be capacitive. The conditions in the example are shown in Fig. 18.

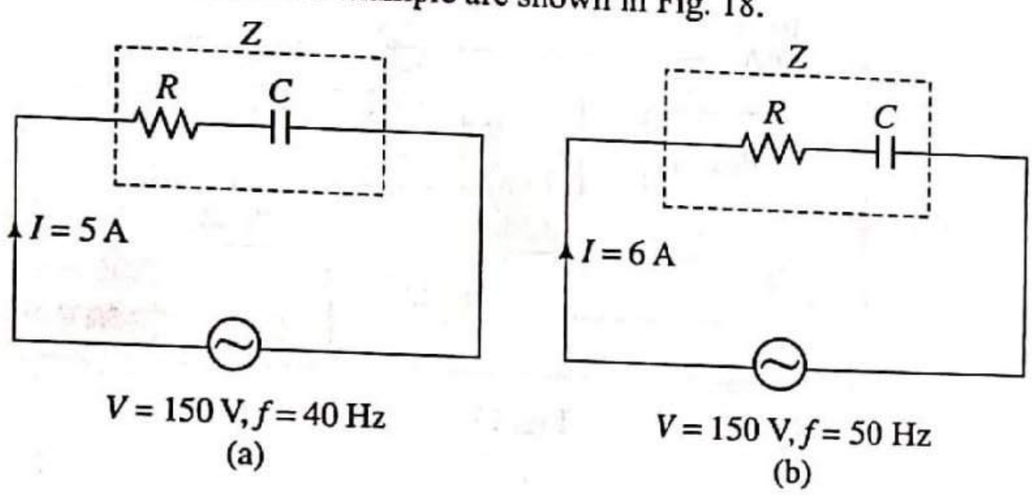

Fig. 18

Case (i) When frequency, $f = 40$ Hz, $I = 5$ A [see Fig. 18(a)]

Circuit impedance, $Z = \frac{V}{I} = \frac{150}{5} = 30\ \Omega$

So, $Z = \sqrt{R^2 + X_C^2}$

or $Z^2 = R^2 + \left(\frac{1}{2\pi fc}\right)^2$

or $(30)^2 = R^2 + \left(\frac{1}{2\pi \times 40 \times C}\right)^2$ (i)

Case (ii) When frequency, $f = 50$ Hz, $I = 6$ A [see Fig. 18(b)]

Circuit impedance, $Z = \frac{V}{I} = \frac{150}{6} = 25\ \Omega$

So, $Z = \sqrt{R^2 + X_C^2}$

or $Z^2 = R^2 + \left(\frac{1}{2\pi fC}\right)^2$

or $(25)^2 = R^2 + \left(\frac{1}{2\pi \times 50 \times C}\right)^2$ (ii)

Solving (i) and (ii)

Resistance, $R = 11.68\ \Omega$

Capacitance, $C = 144\ \mu$F

Power in Case (ii), i.e., when frequency $f = 50$ Hz, $I = 6$ A

$P = I^2 R$

$= (6)^2 \times 11.68$

$= 420.48$ W

(b) **Given:**

KVA rating = 10

Voltage rating = 500 V/250 V

$R_1 = 0.2\ \Omega$; $R_2 = 0.5\ \Omega$; $X_1 = 0.4\ \Omega$; $X_2 = 0.1\ \Omega$

$R_0 = 1500\ \Omega$ and $X_0 = 750\ \Omega$

OC test (Primary side):

$V_1 = E_1 = 500$ Volts

$I_w = \frac{V_1}{R_0} = \frac{500}{1500} = 0.333$ A

$I_\mu = \frac{V_1}{X_0} = \frac{500}{750} = 0.667$ A

$\therefore\ I_0 = \sqrt{I_W^2 + I_\mu^2} = \sqrt{0.333^2 + 0.667^2} = 0.7455$ A

Now, Wattmeter reading $= V_1 I_0 \cos\phi_0$

$= V_1 I_W$

$= 500 \times 0.333 = 166.67$ W

Thus, reading of instruments placed on primary side in OC test are as follows:

Voltmeter reading, $V_1 = 500$ Volts

Ammeter reading, $I_0 = 0.7455$ A

Wattmeter reading, $W = 166.67$ W

SC test (Primary Side):

Assuming that test is carried out at rated current,

Rated primary current

$I_1 = \frac{\text{KVA rating} \times 1000}{E_1}$

$$= \frac{10 \times 1000}{500}$$

$$= 20 \text{ A}$$

So, Ammeter reading, $I_1 = 20$ A

Now, $R_{01} = R_1 + R_2'$

$$= R_1 + \frac{R_2}{K^2}$$

$$= 0.2 + \frac{0.5}{(0.5)^2}$$

$$= 2.2\ \Omega$$

We know that wattmeter indicates full load-copper loss

So, Wattmeter reading, $W = (I_1)^2_{FL} \times R_{01}$

So, $W = (20)^2 \times 2.2$

$= 880$ W

Now, $X_{01} = X_1 + X_2'$

$$= X_1 + \frac{X_2}{K^2}$$

$$= 0.4 + \frac{0.1}{(0.5)^2}$$

$$= 0.8\ \Omega$$

So, $Z_{01} = \sqrt{R_{01}^2 \times X_{01}^2}$

$$= \sqrt{(2.2)^2 + (0.8)^2}$$

$$= 2.341\ \Omega$$

Now, Voltmeter reading,

$$V_{SC} = I_1 \times Z_{01}$$

$$= 20 \times 2.341$$

$$= 46.82 \text{ Volts}$$

Thus, reading of instruments placed on primary side in SC test (assuming test is carried out at rated currents) are as follows:

Voltmeter reading, $V_{SC} = 46.82$ Volts

Ammeter reading, $I_1 = 20$ A

Wattmeter reading, $W = 880$ W

Model Question Paper I

Time: 3 Hours [Total marks: 80]

F.E. Semester I

N.B.: (1) Question No. 1 is compulsory.
(2) Attempt any three questions from the remaining five questions.
(3) Figures to the right side indicate full marks.
(4) Assume data if necessary.

1. (a) Write down the relationship between phase and line voltages, and currents for a star connected balanced load across a three-phase balanced system. **2**

(b) What is the function of commutator in a dc motor? **2**

(c) Derive emf equation of a single-phase transformer. **4**

(d) A coil takes a current of 2 A lagging 60° behind the voltage of 200 V at 50 Hz. Calculate the inductance, resistance, and impedance of the coil. **3**

(e) A 250 V series *RLC* circuit resonates at 50 Hz. The current is then 1A and the potential difference across the capacitor is 500 V. Calculate (i) the resistance, (ii) the inductance, (iii) the capacitance. **3**

(f) Determine the value of R_L for it to absorb the maximum power in the given circuit. **3**

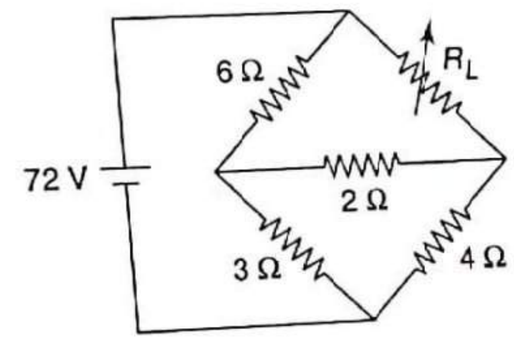

(g) By source transformation, find current *I* in the network shown in the figure. **3**

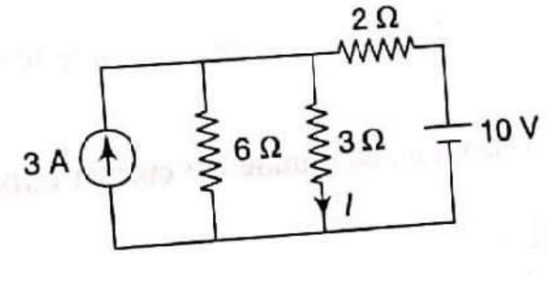

2. (a) Using nodal analysis, find V_x in the given circuit. 6

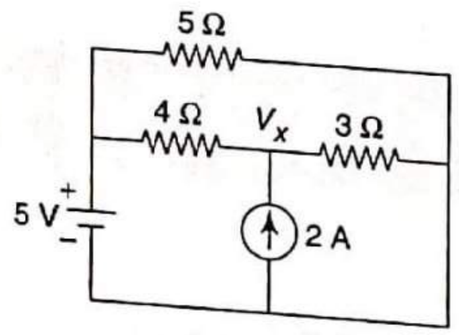

(b) An inductive coil having inductance of 0.04 H and resistance of 25 Ω has been connected in series with another inductive coil of inductance 0.2 H and resistance 15 Ω. The whole circuit has been energised from 230 V, 50 Hz mains. Calculate the power dissipation in each coil and power factor of total circuit. 8

(c) Draw and explain phasor diagram of a transformer, loaded with lagging power factor load. 6

3. (a) Each of delta connected load consists of a 50 Ω resistor in series with a 50 μF capacitor. The supply is 440 V, three-phase, 50 Hz.
Determine (a) phase current, (b) line current, (c) power, (d) reactive power. 8

(b) The data on a single-phase, 250/500 V, 50 Hz transformer are as under: 6

OC test:	250 V	1 A	80 W (carried on *lv* side)
SC test:	20 V	12 A	100 W (carried on *lv* side)

Determine the equivalent circuit of transformer with circuit constants.

(c) What is back emf? Explain the significance of back emf in a dc motor. 2

(d) Derive from first principles, an expression for induced emf in a generator? 4

4. (a) Find the resistance between the terminals '*X*' and '*Y*' shown in the figure. 7

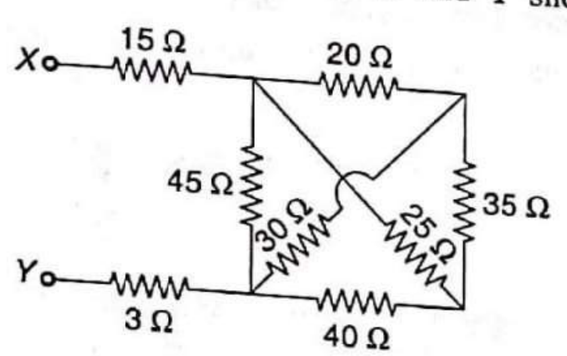

(b) A 10 μF capacitor has a current of $i = 5\cos(2000t)$ A. Obtain the voltage V_C across it. 5

(c) Find the relation between the readings of two wattmeters connected to measure the total power in 3-phase balanced circuit with (i) unity power factor, (ii) zero power factor. 4

(d) What is the difference between lag-type and wave-type armature windings in a dc generator? 4

5. (a) Using Thevenin's theorem, determine the current through 10 Ω resistor in the given circuit. 8

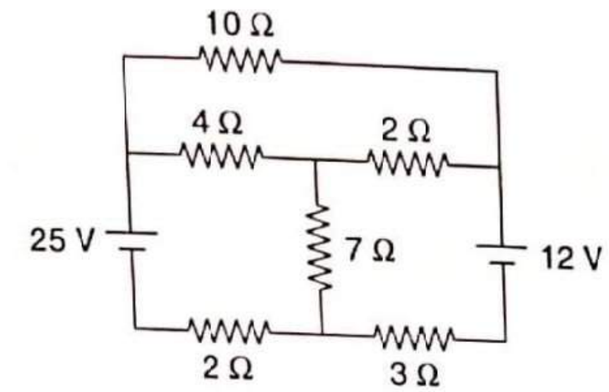

(b) In an RLC series circuit, the voltage across the resistor, inductor (pure), and capacitor are 20 V, 15 V, and 40 V, respectively. What is the supply voltage? 4

(c) Calculate the efficiency of transformer at half load and quarter load for 0.71 lagging pf for a 800 kVA, 1100/250 V, 50 Hz, 1-ϕ transformer whose losses are as follows:

Iron loss = 800 W, copper loss at full load = 800 W 8

6. (a) By superposition principle, determine the current through 3 Ω resistor in the given circuit. 7

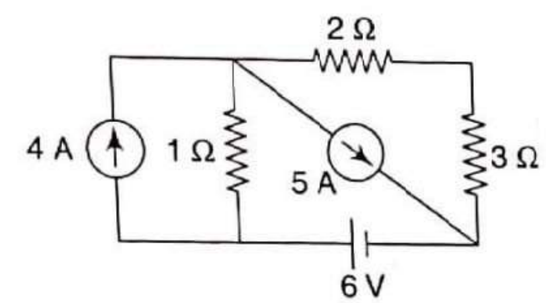

(b) A 10 Ω resistor is connected in series with an inductor and a capacitor, across a variable frequency, 25 V supply. When the frequency is 400 Hz, the current is at its maximum value of 0.5 A and the potential difference across the capacitor is 150 V. Calculate the resistance and inductance of the inductor. 7

(c) Draw a circuit diagram for the measurement of power in a three-phase load system by two wattmeters. For balanced loads, derive an expression for the wattmeter readings. 6

Model Question Paper II

Time: 3 Hours

[Total marks: 80]

F.E. Semester I

N.B.: (1) Question No. 1 is compulsory.
(2) Attempt any three questions from the remaining five questions.
(3) Figures to the right side indicate full marks.
(4) Assume data if necessary.

1. (a) For the network shown below, find the equivalent resistance across the terminals x and y. **3**

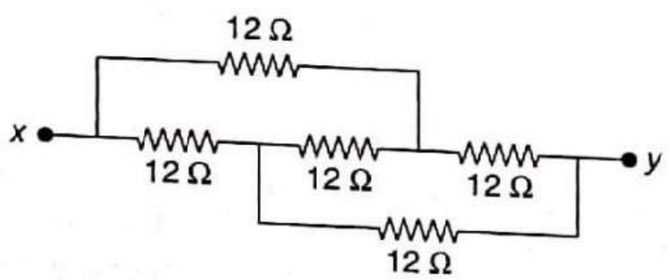

(b) State and prove the maximum power transfer theorem. **3**

(c) The instantaneous values of two alternating currents are represented respectively by $i_1 = 60 \sin \omega t$ and $i_2 = 40 \sin(\omega t + \pi/3)$. Derive the expression for the instantaneous value of the difference of these currents. **3**

(d) State the conditions under which series RLC circuit is in electrical resonance. **3**

(e) Explain the concept of a three-phase emf generation. **2**

(f) Differentiate between ideal and practical transformers. **4**

(g) What are the applications of dc shunt motor? **2**

2. (a) Find the value of resistor R in the given circuit. **6**

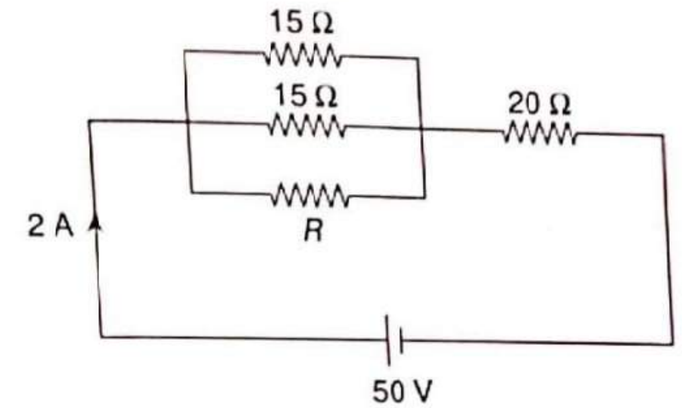

(b) For the given circuit determine kVA, kVAR, and kW in each branch and the power factor of the whole circuit. **8**

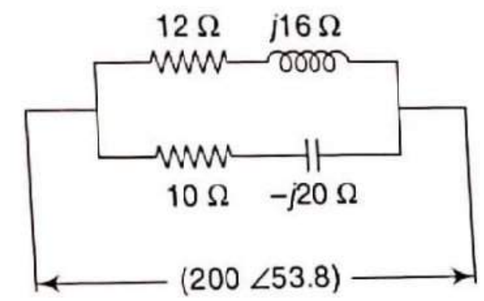

(c) Draw and explain phasor diagram of a transformer, loaded with leading power factor load. **6**

3. (a) Three 100 Ω non-inductive resistances are connected in (a) star, (b) delta across a 400 V, 50 Hz, 3-phase mains. Calculate the power taken from the supply system in each case. In the event of one of three resistances getting open circuited, what would be the value of total power taken from the mains in each of the two cases? **8**

(b) A 50 kVA, single phase transformer of 2300/230 V rating has the primary and secondary winding resistance of 2 Ω and 0.02 Ω, respectively. The iron loss equals to 412 W. Calculate the efficiency at (i) half load, (ii) full load, when power factor of the load is 0.8. **6**

(c) What is the function of commutator in a dc generator? **2**

(d) Explain the principle of working a dc motor. **4**

4. (a) Using source transformation, determine voltage v across 3 Ω resistor in the given circuit. **7**

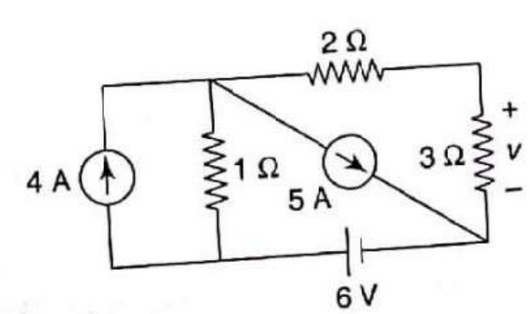

(b) Determine the value of the unknown quantities in ac circuits given in the following circuits: 5

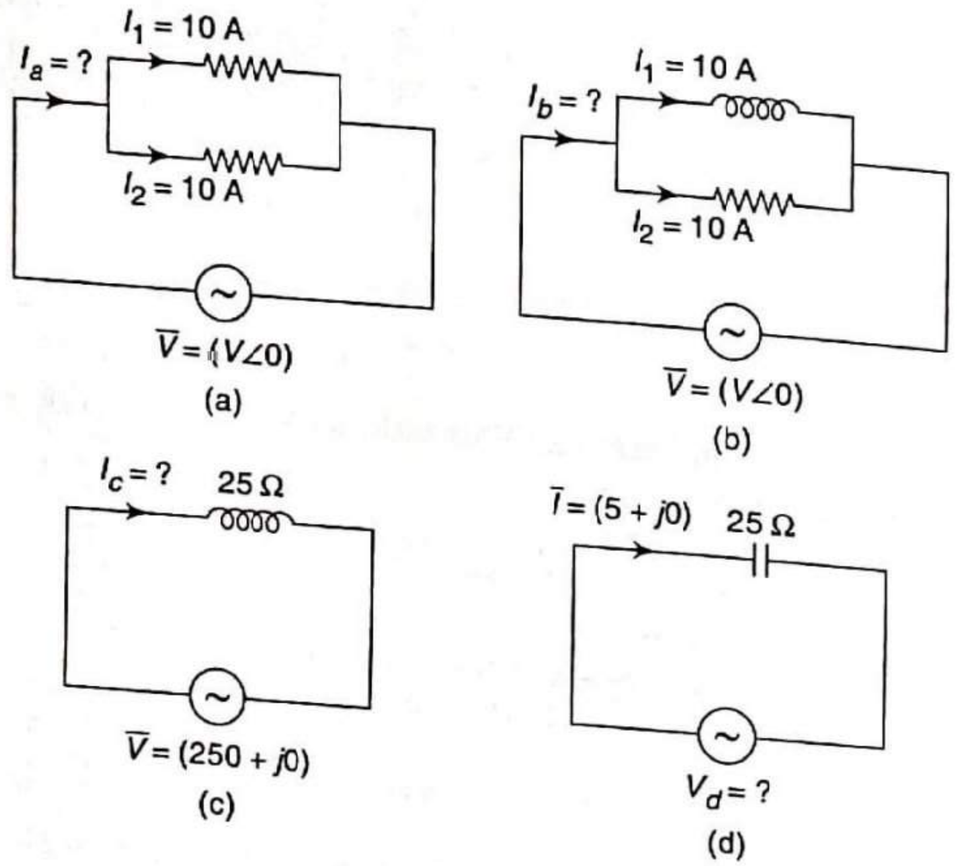

(c) In a three-phase power measurement by two-wattmeter method,comment on the wattmeter readings, when (i) phase angle, $\phi = 60$, (ii) phase angle, $\phi = 90$. 4

(d) Derive the expression for the electromagnetic torque developed in a dc motor. 4

5. (a) Using Thevenin's theorem, determine the current through 6 Ω resistor in the given circuit. 8

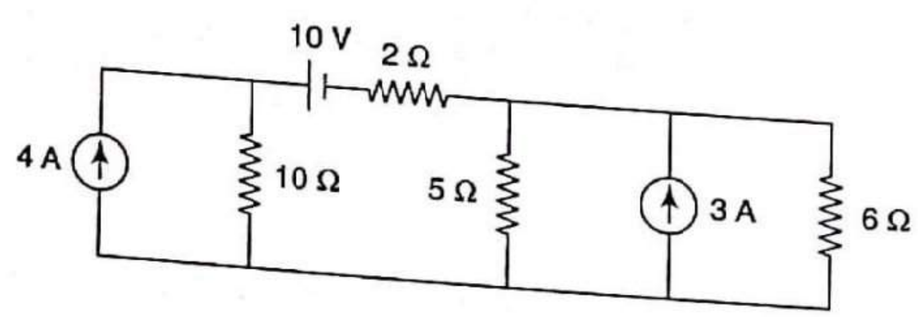

(b) In an ac circuit the applied voltage and circuit current is given by $v = 15 \sin\left(wt - \frac{\pi}{4}\right)$ and $i = 10 \sin\left(wt + \frac{\pi}{6}\right)$. What is the nature of the circuit? Calculate the impedance and power factor of the circuit. 4

(c) With a neat circuit diagram, explain the procedure of conducting the OC test and SC test on a single-phase transformer. The wattmeter reads iron losses in OC test and reads copper losses in SC test of a transformer. Why? 8

6. (a) Using superposition principle, find current I in the circuit shown below. 7

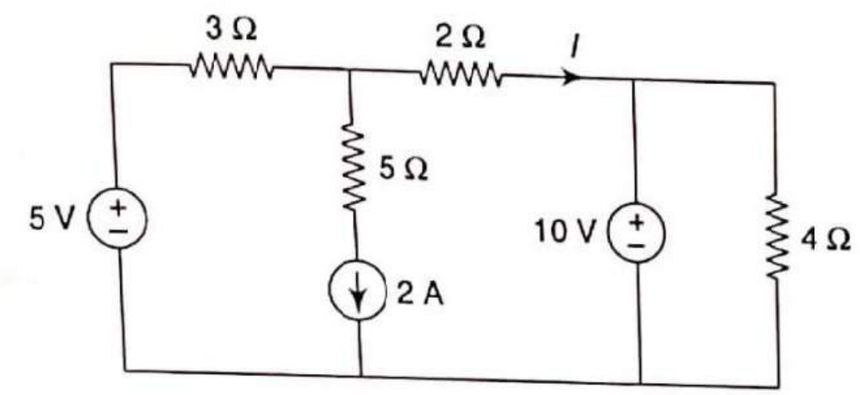

(b) A series circuit consisting of a 12 Ω resistance, 0.3 H inductance, and a variable capacitor is connected across 100 V, 50 Hz ac supply. The capacitance value is adjusted to obtain maximum current. Find this capacitance value and the power drawn by the circuit under this condition. 7

(c) Show that the total power and pf in a three-phase balanced system can be determined using two wattmeters. Draw the vector diagram. 6

Related Titles

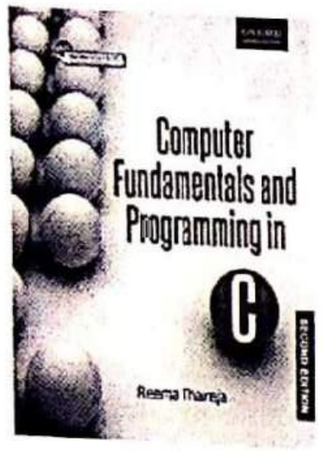

COMPUTER FUNDAMENTALS AND PROGRAMMING IN C, 2E [9780199463732]
Reema Thareja, *University of Delhi*
This book provides a thorough coverage of all the fundamental concepts related to computer science and C programming.

Key Features
- Provides exhaustive coverage of computer fundamentals, focusing on both the hardware as well as software components
- Offers a detailed coverage of different types of number systems and computer codes
- Includes case studies after select chapters

TECHNICAL COMMUNICATION: PRINCIPLES AND PRACTICE, 3E [9780199457496]
Meenakshi Raman, *BITS Pilani, Goa Campus*; **Sangeeta Sharma,** *BITS Pilani*
This book discusses the core concepts of technical communication and explains them with the help of numerous examples and practice exercises.

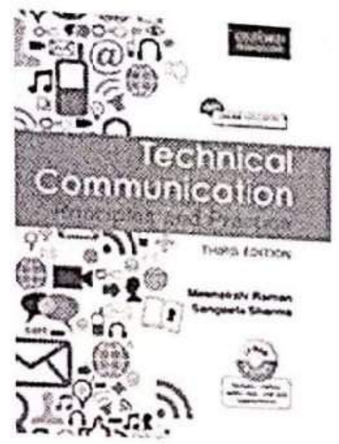

Key Features
- User-friendly approach with simple and easy-to-understand language
- Practical tips on pronunciation, accent, intonation, grammar, and vocabulary basic to effective technical communication
- Videos and PowerPoint presentations on group discussions and interviews

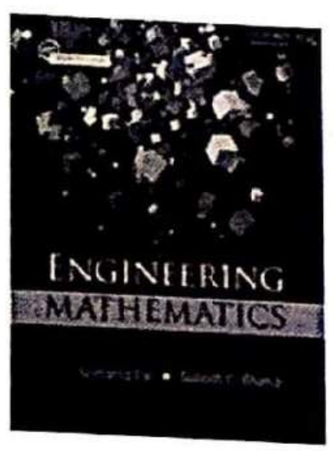

ENGINEERING MATHEMATICS [9780198070894]
Srimanta Pal, *ISI, Kolkata* & **Subodh C. Bhunia,** *Director, Orient Digital Company Pvt. Ltd*
This book covers all the topics taught in mathematics in different semesters in the B.Tech curriculum

Key Features
- Separate chapters on the applications to engineering problems discuss how the mathematical theorems are applied in real-world problems
- Numerous section review exercises are disseminated throughout the chapters
- MCQs (with answers) and review questions are given at the end of each chapter

Other Related Titles

9780199455393 N.S. Parthasarathy & Vela Murali: *Engineering Graphics*
9780198096320 Basudeb Bhattacharyya: *Engineering Mechanics, 2e*
9780199452798 R.K. Bisht & H.S. Dhami: *Discrete Mathematics*
9780199459742 Barun K. Mitra: *Personality Development and Soft Skills, 2e*

May 2017

Time: 3 Hours [Total Marks : 80]

N. B.: (1) Question No. 1 is compulsory.
(2) Attempt any three questions from the remaining five.
(3) Figures to the right indicate full marks.
(4) Wherever not mentioned value of resistance is in ohms.
(5) Assume suitable data if necessary.

1. (a) Find the ratio V_L/V_S in the circuit shown below using Kirchoff's laws. **4**

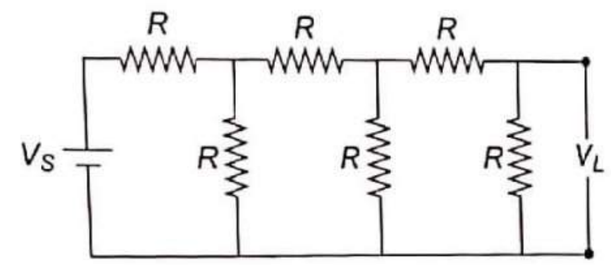

(b) Find the rms value for the following waveform. **4**

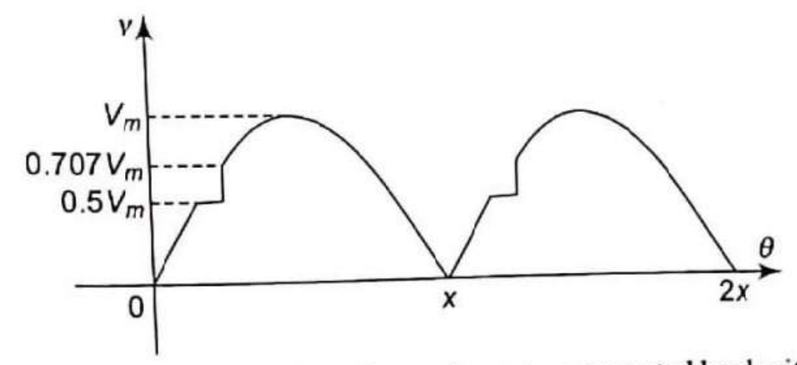

(c) Draw the phasor diagram for a three-phase star connected load with leading power factor. Indicate all the line and phase voltages and currents. **4**

(d) A 5 kVA, 240/2400 V, 50 Hz single phase transformer has the maximum value of flux density as 1 Tesla. If the emf per turn is 10, calculate the number of primary and secondary turns and the full load primary and secondary currents. **4**

(e) Explain the principle of operation of DC generator. **4**

Solution

(a) By marking the nodes we get the circuit as shown in Fig. 1.

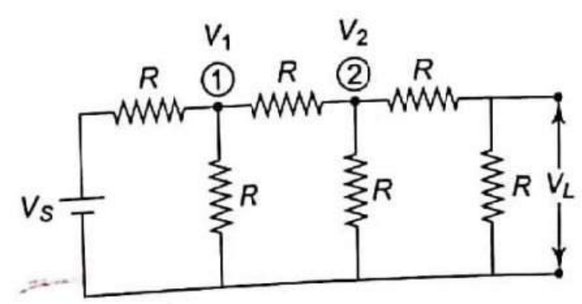

Fig. 1

By voltage division rule,

$$V_L = \frac{V_2 \times R}{R+R} = \frac{V_2}{2} \qquad \text{(i)}$$

The simplified circuit is shown in Fig. 2.

By voltage division rule,

$$V_2 = \frac{\frac{2}{3}R \times V_1}{R + \frac{2}{3}R} = \frac{2}{5}V_1 \quad \text{(ii)}$$

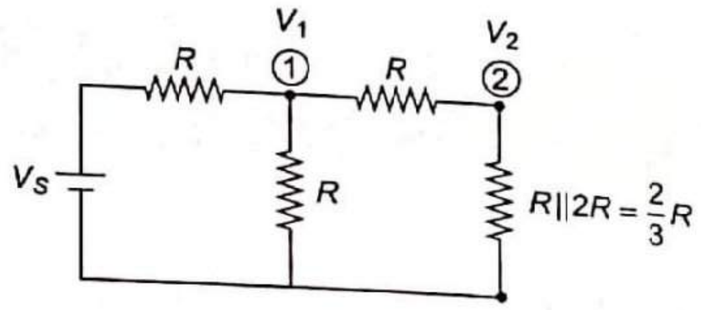

Fig. 2

From Eqs (i) and (ii), $V_1 = 5V_L$

The circuit shown in Fig. 2 can be further simplified as shown in Fig. 3.

By voltage division rule

$$V_1 = \frac{\frac{5}{8}R \times V_S}{R + \frac{5}{8}R} = \frac{5}{13}V_S$$

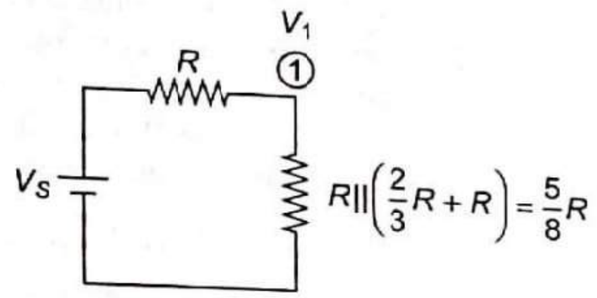

Fig. 3

Therefore, $5V_L = \frac{5}{13}V_S \quad (\because V_1 = 5V_L)$

$$\frac{V_L}{V_S} = \frac{1}{13}$$

(b) The angle θ_1 at which the instantaneous value of the voltage becomes $0.5V_m$ is required. This angle θ_1 can be calculated as given below.

The equation of the waveform is given by

$$v = V_m \sin\theta_1$$

When $v = 0.5V_m$; $\theta = \theta_1$

We have $0.5V_m = V_m \sin\theta_1$

$$\theta_1 = \sin^{-1} 0.5 = 30° \text{ or } \frac{\pi}{6}\text{ rad}$$

Similarly, the angle θ_2 at which the instantaneous value of the voltage becomes $0.707V_m$ can be calculated as:

When $v = 0.707V_m$; $\theta = \theta_2$

We have $0.707V_m = V_m \sin\theta_2$

$$\theta_2 = \sin^{-1} 0.707 = 45° \text{ or } \frac{\pi}{4}\text{ rad}$$

The waveform is shown in Fig. 4.

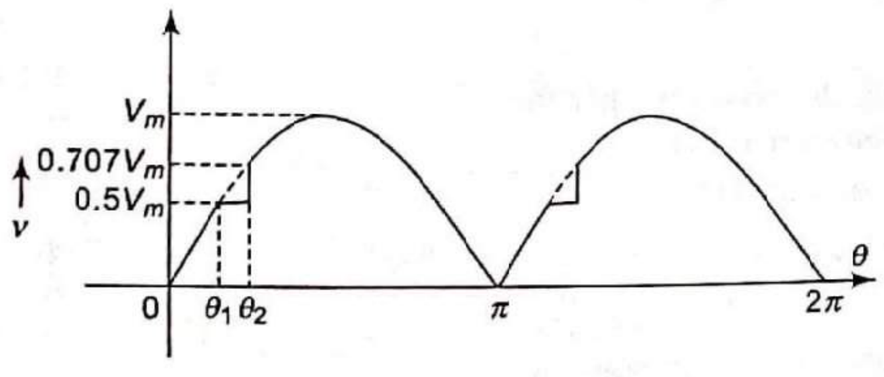

Fig. 4

The equations are as follows:

$$v = V_m \sin\theta \quad \text{for } 0 < \theta < \frac{\pi}{6}$$

$$v = 0.5V_m \quad \text{for } \frac{\pi}{6} < \theta < \frac{\pi}{4}$$

$$v = V_m \sin\theta \quad \text{for } \frac{\pi}{4} < \theta < \pi$$

So, $V_{RMS} = \sqrt{\frac{1}{\pi}\int_0^{\pi} v^2 d\theta}$

or $V_{RMS}^2 = \frac{1}{\pi}\int_0^{\pi} v^2 d\theta = \frac{1}{\pi}\left[\int_0^{\pi/6} v^2 d\theta + \int_{\pi/6}^{\pi/4} v^2 d\theta + \int_{\pi/4}^{\pi} v^2 d\theta\right]$

$$= \frac{1}{\pi}\left[\int_0^{\pi/6} (V_m \sin\theta)^2 d\theta + \int_{\pi/6}^{\pi/4} (0.5V_m)^2 d\theta + \int_{\pi/4}^{\pi} (V_m \sin\theta)^2 d\theta\right]$$

$$= \frac{1}{\pi}\left[V_m^2 \int_0^{\pi/6}\left(\frac{1-\cos 2\theta}{2}\right)d\theta + (0.5V_m)^2 \int_{\pi/6}^{\pi/4} d\theta + V_m^2 \int_{\pi/4}^{\pi}\left(\frac{1-\cos 2\theta}{2}\right)d\theta\right]$$

$$= \frac{V_m^2}{\pi}\left[\frac{1}{2}\left(\theta - \frac{\sin 2\theta}{2}\right)_0^{\pi/6} + (0.5)^2(\theta)_{\pi/6}^{\pi/4} + \frac{1}{2}\left(\theta - \frac{\sin 2\theta}{2}\right)_{\pi/4}^{\pi}\right] = 0.4897V_m^2$$

So, $V_{RMS} = 0.6998V_m$

(c) Refer to Section 3.3.1.

(d) Given: kVA rating = 5

Voltage rating = 240/2400 V i.e. $E_1 = 240$ V and $E_2 = 2400$ V

Maximum value of flux density, $\phi_m = 1$ Tesla

emf per turn i.e. $\frac{E_1}{N_1} = \frac{E_2}{N_2} = 10$

So,

$$\frac{E_1}{N_1} = 10 \Rightarrow \frac{240}{N_1} = 10 \Rightarrow N_1 = 24 \text{ turns}$$

$$\frac{E_2}{N_2} = 10 \Rightarrow \frac{2400}{N_2} = 10 \Rightarrow N_2 = 240 \text{ turns}$$

Full load primary current,

$$(I_1)_{FL} = \frac{\text{kVA Rating} \times 1000}{E_1} = \frac{5 \times 1000}{240} = 20.83 \text{ A}$$

Full load secondary current,

$$(I_2)_{FL} = \frac{\text{kVA Rating} \times 1000}{E_2} = \frac{5 \times 1000}{2400} = 2.083 \text{ A}$$

(e) Refer to Section 5.2.1.

2. (a) Find the current through 3 Ω resistor by mesh analysis. 4

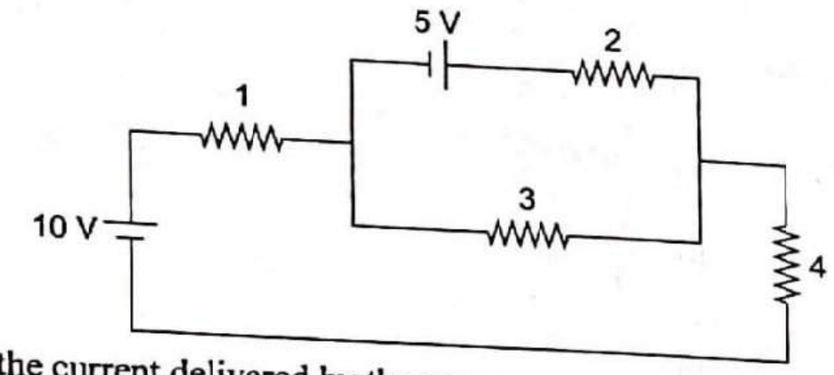

(b) Find the current delivered by the source. **8**

(c) The voltage and current in a circuit are given by $\bar{V} = 12\angle 30°$ V and $\bar{I} = 3\angle 60°$ A. The frequency of the supply is 50 Hz. Find: **8**

(i) Equation for voltage and current in both the rectangular and standard form.

(ii) Impedance, reactance and resistance.

(iii) Phase difference, power factor, and power loss.

Draw the circuit diagram considering a simple series circuit of two elements indicating their values.

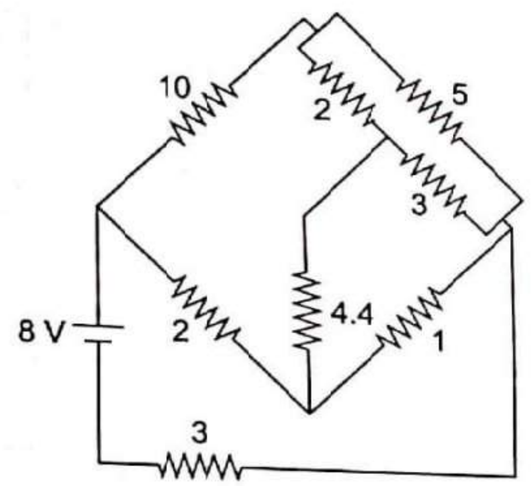

Solution

(a) Assuming the separate mesh current for each mesh, we get the circuit as shown in Fig. 5.

Applying KVL to mesh 1,

$$-I_1 - 3(I_1 - I_2) - 4I_1 + 10 = 0$$

or $\quad -8I_1 + 3I_2 = -10 \qquad$ (i)

Applying KVL to mesh 2,

$$5 - 2I_2 - 3(I_2 - I_1) = 0$$

or $\quad 3I_1 - 5I_2 = 5 \qquad$ (ii)

From Eqs (i) and (ii),

$$I_1 = 2.097 \text{ A} \qquad I_2 = 2.258 \text{ A}$$

Current through 3 Ω resistor,

$$I_{3\Omega} = I_2 - I_1 \text{A } (\leftarrow) = (2.258 - 2.097)\text{A } (\leftarrow) = 0.161 \text{ A } (\leftarrow)$$

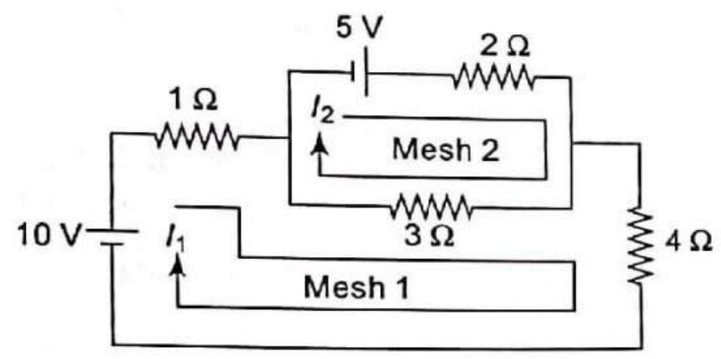

Fig. 5

(b) By marking the different nodes, we get the circuit shown in Fig. 6. Let the current delivered by source be I A. Converting the delta connection formed by 2 Ω, 5 Ω, and 3 Ω resistors (Δ ABC) into equivalent star network, i.e. Δ ABC ⇒ Y ABC, we obtain the modified network as shown in Fig. 7.

In Fig. 7, resistors 10 Ω and 1 Ω are in series. Also resistors 0.6 Ω and 4.4 Ω are in series. Converting the delta connection formed by 5 Ω, 1.5 Ω, and 1 Ω resistors (Δ SBD) into equivalent star network, i.e. Δ SBD ⇒ Y SBD, we get the circuit as shown in Fig. 9.

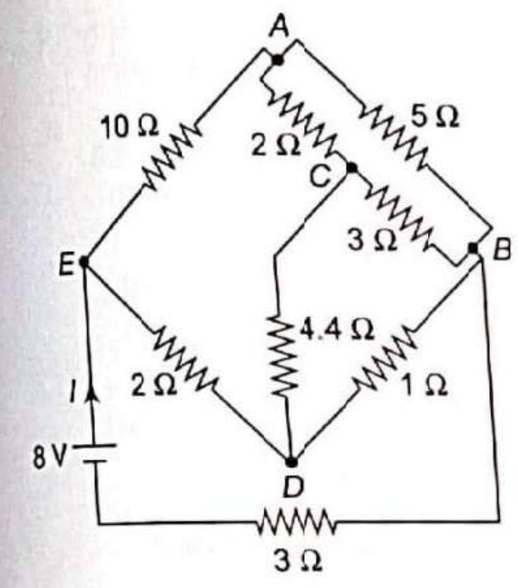

Fig. 6

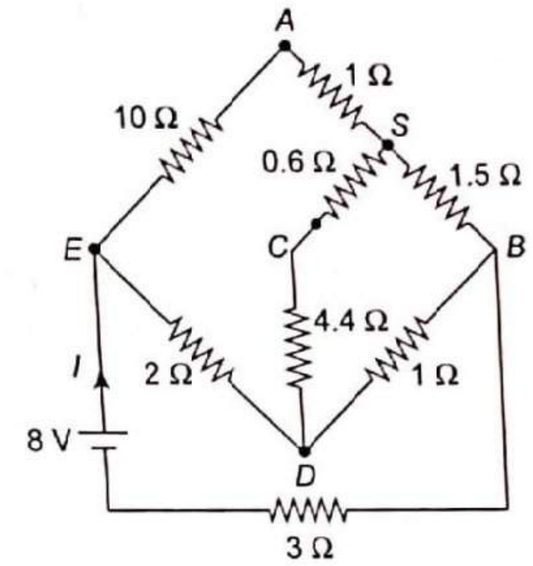

Fig. 7

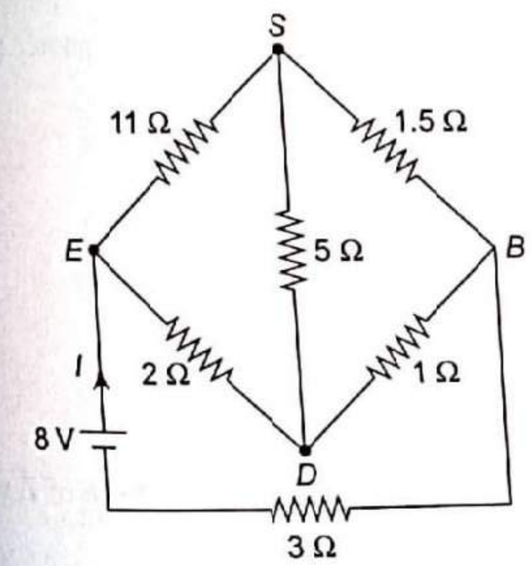

Fig. 8

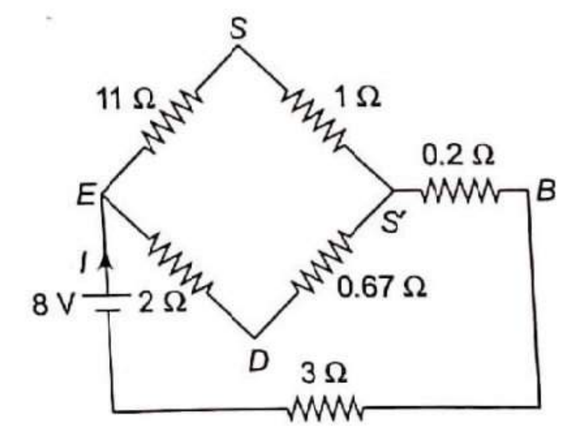

Fig. 9

In Fig. 9, resistors 11 Ω and 1 Ω are in series. Also resistors 2 Ω and 0.67 Ω are in series. In Fig. 10, resistors 12 Ω and 2.67 Ω are in parallel.

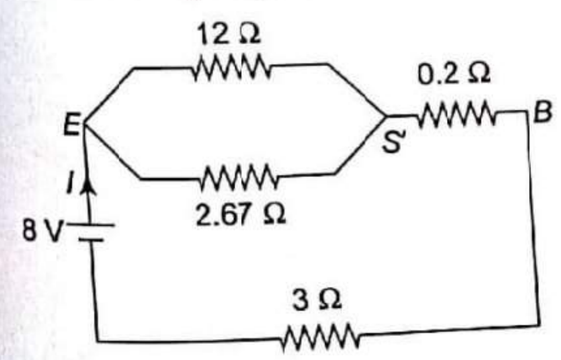

Fig. 10

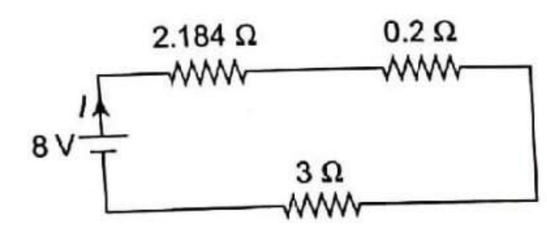

Fig. 11

From Fig. 11, by Ohm's law,

$$I = \frac{8}{2.184 + 0.2 + 3} = \frac{8}{5.384} = 1.486 \text{ A}$$

(c) (i) Rectangular forms are given as:

$$\bar{V} = (12\angle 30) \text{ V} = (10.392 + j6) \text{ V}$$

$$\bar{I} = (3\angle 60) \text{ A} = (1.5 + j2.598) \text{ A}$$

The supply frequency is 50 Hz i.e. $f = 50$ Hz

So, angular frequency, $\omega = 2\pi f = 2\pi \times 50 = 100\pi$ rad/sec

Now, maximum value of voltage, V_m, can be calculated as:

$$V_m = \sqrt{2} \times V = \sqrt{2} \times 12 = 16.971 \text{ V}$$

Similarly, maximum value of current,

$$I_m = \sqrt{2} \times I = \sqrt{2} \times 3 = 4.243 \text{ A}$$

So, standard sinusoidal form (i.e. equation) of voltage can be written as:

$$v = V_m \sin(\omega t \pm \phi)$$

where $V_m = 16.971$ V; $\omega = 100\pi$, and $\phi = 30°$

So, $v = 16.97 \sin(\omega t + 30°)$

Similarly, standard sinusoidal form of current (i.e. equation) is given as:

$$i = I_m \sin(\omega t \pm \phi)$$

where $I_m = 4.243$ A; $\omega = 100\pi$ and $\phi = 60°$

So, $i = 4.243 \sin(\omega t + 60)$

(ii) Impedance ($\bar{Z}$) can be calculated as

$$\bar{Z} = \frac{\bar{V}}{\bar{I}} = \frac{(12\angle 30)}{(3\angle 60)} = (4\angle -30)\text{A} = (3.464 - j2) \text{ A}$$

From rectangular form of Z, we have

$$R = 3.464\ \Omega \text{ and } X_C = 2\ \Omega$$

(iii) From polar form of Z, the phase difference, $\phi = 30°$

So, Power factor $= \cos\phi = \cos 30 = 0.866$ leading

Power loss, $P = I^2 \times R = (3)^2 \times 3.464 = 31.176$ W

For circuit diagram, we need values of two elements. From rectangular form of Z, we have

$$R = 3.464\ \Omega \quad \text{and} \quad X_C = 2$$

i.e. $\dfrac{1}{2\pi fC} = 2 \Rightarrow \dfrac{1}{\omega C} = 2 \Rightarrow \dfrac{1}{100\pi C} = 2$

or $C = 1.592 \times 10^{-3}$F

The circuit diagram is shown in Fig. 12.

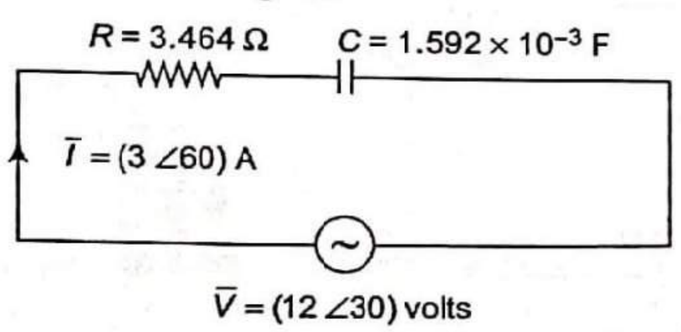

Fig. 12

3. (a) Find the resultant voltage and its equation for the given voltages which are connected in series. 4

$$e_1 = 2\sin\omega t,\ e_2 = -\cos\left(\omega t - \frac{\pi}{6}\right),\ e_3 = 2\cos\left(\omega t - \frac{\pi}{4}\right),\ e_4 = -2\sin\left(\omega t + \frac{\pi}{3}\right)$$

(b) Find the current through 20 Ω resistor by using superposition theorem. 8

(c) Two parallel branches of a circuit comprise respectively of (i) a coil having 5 Ω resistance and inductance of 0.05 H, (ii) a capacitor of capacitance 100 μF in series with a resistance of 10 Ω. The circuit is connected to a 100 V, 50 Hz supply. Find 8

(i) impedance and admittance of each branch,

(ii) equivalent admittance and impedance of the circuit,

(iii) the supply current and power factor of the circuit.

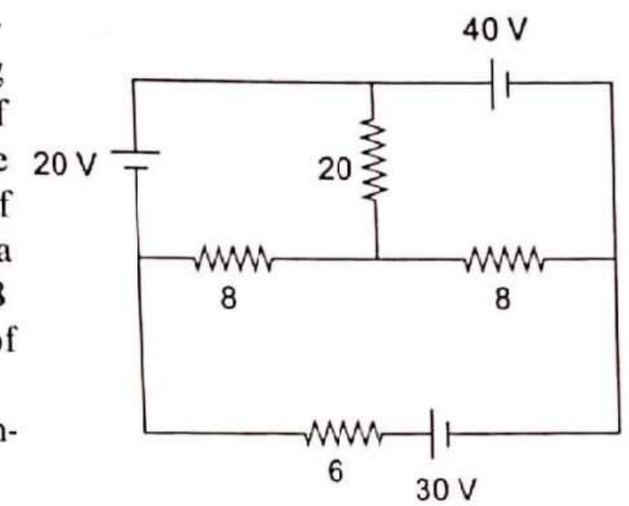

Draw its equivalent series circuit using two elements indicating their values.

Solution

(a) Given:

$$e_1 = 2\sin\omega t \qquad e_2 = -\cos\left(\omega t - \frac{\pi}{6}\right)$$

$$e_3 = 2\cos\left(\omega t - \frac{\pi}{4}\right) \qquad e_4 = -2\sin\left(\omega t + \frac{\pi}{3}\right)$$

Writing the standard sinusoidal forms of given quantities:

$$e_1 = 2\sin\omega t \qquad e_2 = \sin\left(\omega t + \frac{4\pi}{3}\right)$$

$$e_3 = 2\sin\left(\omega t + \frac{\pi}{4}\right) \qquad e_4 = 2\sin\left(\omega t + \frac{4\pi}{3}\right)$$

Converting the standard sinusoidal forms into polar forms,

$$\bar{E}_1 = (1.414\angle 0) \text{ V} \qquad \bar{E}_2 = (0.707\angle 240) \text{ V}$$

$$\bar{E}_3 = (1.414\angle 45) \text{ V} \qquad \bar{E}_4 = (1.414\angle 240) \text{ V}$$

Converting the polar forms into rectangular forms

$$\bar{E}_1 = (1.414 + j0) \text{ V} \qquad \bar{E}_2 = (-0.3535 - j0.6123) \text{ V}$$

$$\bar{E}_3 = (1 + j1) \text{ V} \qquad \bar{E}_4 = (-0.707 - j1.2246) \text{ V}$$

Let the resultant voltage be E,

So, $\bar{E} = \bar{E}_1 + \bar{E}_2 + \bar{E}_3 + \bar{E}_4$

$$= (1.414 + j0) + (-0.3535 - j0.6123) + (1 + j1) + (-0.707 - j1.2246)$$

$$= (1.3535 - j0.8367) \text{ V}$$

$$= (1.591\angle -31.72) \text{ V}$$

Converting into standard sinusoidal form,

$$v = 2.25\sin(\omega t - 31.72)$$

(b) **Step I:** Considering 20 V source is acting alone and replacing 30 V source and 40 V source by short circuit, we get the circuit shown in Fig. 13.

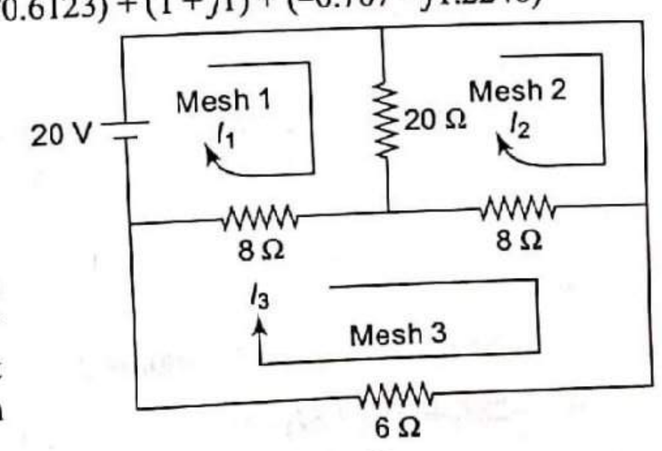

Fig. 13

Assuming the separate mesh current for each mesh. Applying KVL to Mesh 1,

$$20-20(I_1-I_2)-8(I_1-I_3)=0$$

or $\quad -28I_1+20I_2+8I_3=-20 \qquad$ (i)

Applying KVL to Mesh 2,

$$-20(I_2-I_1)-8(I_2-I_3)=0$$

or $\quad 20I_1-28I_2+8I_3=0 \qquad$ (ii)

Applying KVL to Mesh 3,

$$-8(I_3-I_1)-8(I_3-I_2)-6I_3=0$$

or $\quad 8I_1+8I_2-22I_3=0 \qquad$ (iii)

By solving Eqs (i), (ii), and (iii), we get

$I_1=4.792$ A $\qquad I_2=4.375$ A

Now, $\quad I'_{20\Omega}=(I_1-I_2)\,A(\downarrow)$

$$=(4.792-4.375)\,A(\downarrow)=0.417\,A(\downarrow)$$

Step II: Considering 30 V source is acting alone and replacing 20 V source and 40 V source by short circuit, we get the circuit as shown in Fig. 14.

In Fig. 14, across A and B, all three resistors, R_1, R_2, and R_3 are in parallel. So, we get the circuit as shown in Fig. 15.

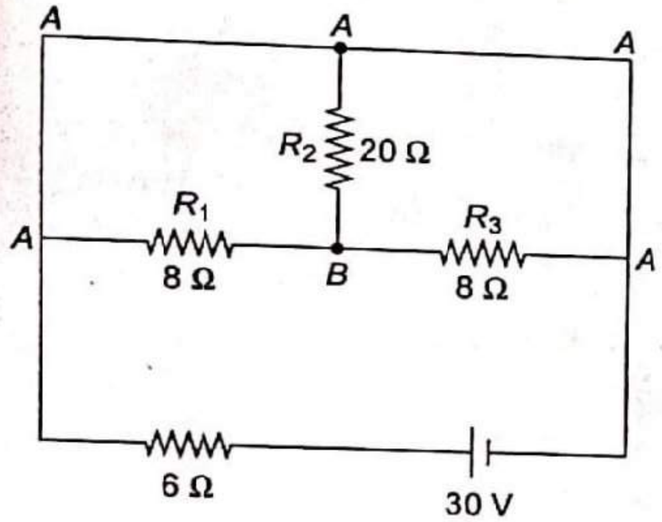

Fig. 14

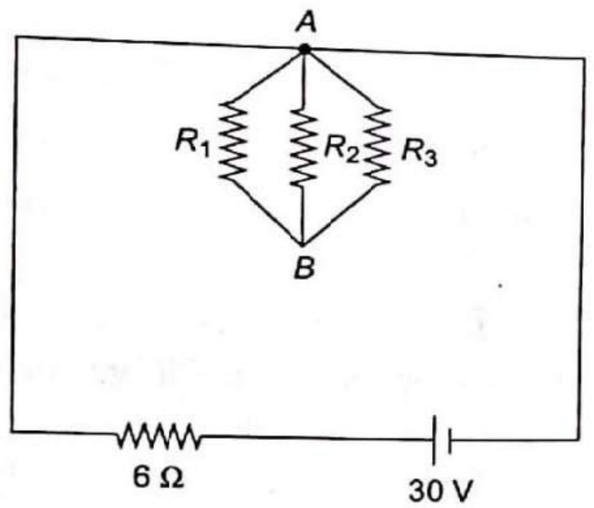

Fig. 15

From Fig. 15,

$$I''_{20\Omega}=0\,\text{A}$$

Step III: Considering 40 V source is acting alone and replacing 20 V source and 30 V source by short circuit, we obtain the circuit shown in Fig. 16.

Assuming the separate mesh current for each mesh in Fig. 16. Applying KVL to Mesh 1,

$$-20(I_1-I_2)-8(I_1-I_3)=0$$

or $\quad -28I_1+20I_2+8I_3=0 \qquad$ (i)

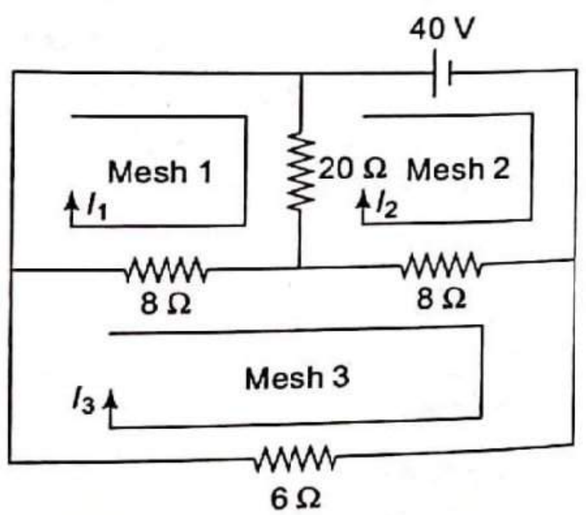

Fig.16

Applying KVL to Mesh 2,

$$-40-8(I_2-I_3)-20(I_2-I_1)=0$$

or $\quad 20I_1-28I_2+8I_3=40 \qquad$ (ii)

Applying KVL to Mesh 3,

$$-8(I_3-I_1)-8(I_3-I_2)-6I_3=0$$

or $\quad 8I_1+8I_2-22I_3=-0 \qquad$ (iii)

By solving Eqs (i), (ii), and (iii) we get

$I_1=-8.75$ A $\qquad I_2=-9.58$ A

Now, $\quad I'''_{20\Omega}=(I_1-I_2)\,A(\downarrow)=0.83\,\text{A}(\downarrow)$

Step IV: According to superposition theorem, resultant current through 20 Ω resistor is algebraic sum of currents due to individual sources acting alone.

Hence, $\quad I_{20\Omega}=I'_{20\Omega}+I''_{20\Omega}+I'''_{20\Omega}$

$$=0.417\text{A}(\downarrow)+0\text{A}+0.83\text{A}(\downarrow)=1.25\text{A}(\downarrow)$$

(c) The conditions in the example are shown in Fig. 17.

Taking applied voltage as reference,

$$\bar{V}=(100\angle 0)\ \text{V}$$

Now, $L=0.05$ H; $\quad X_L=2\pi fL=2\pi\times 50\times 0.05=15.707\,\Omega$

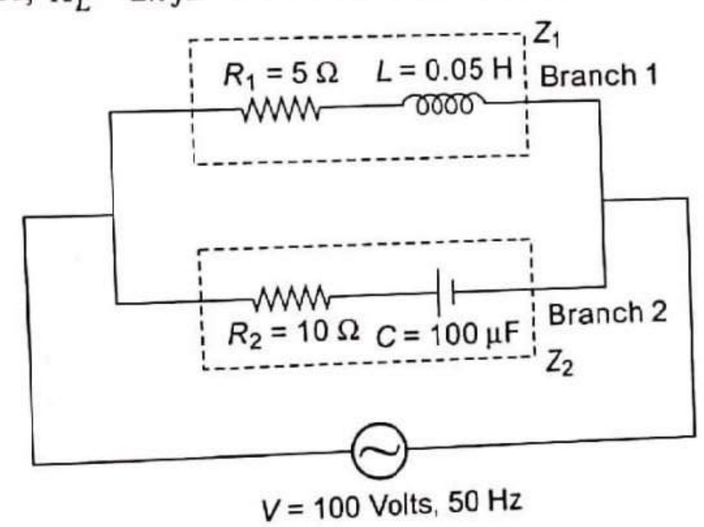

Fig. 17

$$C=100\times 10^{-6}\text{F};\quad X_C=\frac{1}{2\pi fC}=\frac{1}{2\pi\times 50\times 100\times 10^{-6}}=31.831\,\Omega$$

(i) Impedance of branch 1,

$$\bar{Z}_1=(5+j15.71)\,\Omega=(16.48\angle 72.34)\Omega$$

Admittance of branch 1,

$$\bar{Y}_1=\frac{1}{\bar{Z}_1}=\frac{1}{(16.48\angle 72.34)}=(0.0607\angle -72.34)\mho=(0.0184-j0.0578)\mho$$

Now, impedance of branch 2,

$$\bar{Z}_2=(10-j31.83)\Omega=(33.36\angle -72.56)\Omega$$

Admittance of branch 2,

$$\bar{Y}_2=\frac{1}{\bar{Z}_2}=\frac{1}{(33.36\angle -72.56)}=(0.02998\angle 72.56)\mho=(0.00898+j0.0286)\mho$$

(ii) Equivalent admittance of the circuit,

$$\bar{Y} = \bar{Y}_1 + \bar{Y}_2 = (0.0184 - j0.0578) + (0.00898 + j0.0286)$$

$$= (0.02738 - j0.0292)\mho = (0.04 \angle -46.84)\mho$$

Equivalent impedance of the circuit

$$\bar{Z} = \frac{1}{\bar{Y}} = \frac{1}{(0.04 \angle -46.84)} = (25 \angle 46.84)\Omega$$

(iii) The supply current

$$\bar{I} = \frac{\bar{V}}{\bar{Z}} = \frac{(100\angle 0)}{(25\angle 46.84)} = (4\angle -46.84)\text{ A}$$

Power factor of circuit = cos 46.84 = 0.684 lagging

The equivalent or total impedance of the circuit,

$$\bar{Z} = (25\angle 46.84)\Omega = (17.1 + j18.24)\Omega$$

From rectangular form of $\bar{Z}$,

$R = 17.1\ \Omega$ and $X_L = 18.24\ \Omega$

Now, $X_L = 18.24\ \Omega$

$2\pi fL = 18.24 \Rightarrow 2\pi \times 50 \times L = 18.24 \Rightarrow L = 57.99$ mH

Thus, equivalent series circuit of two elements is given as shown in Fig. 18.

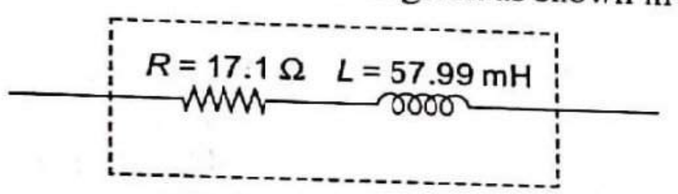

Fig. 18

4. (a) How are DC machines classified? 4

(b) Find the current through 10 Ω resistor by using Norton's theorem. 8

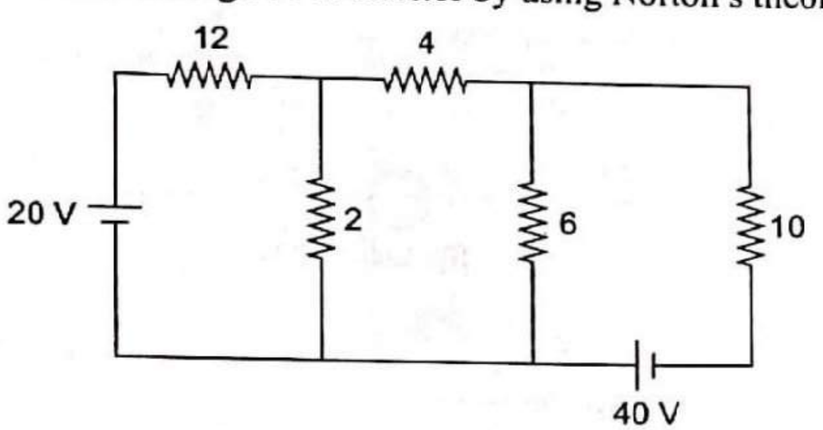

(c) An inductive coil has a resistance of 20 Ω and inductance of 0.2 H. It is connected in parallel with a capacitor of 20 μF. This combination is connected across a 230 V supply having variable frequency. Find the frequency at which the total current drawn from the supply is in phase with the supply voltage. What is this condition called? Find the values of total current drawn and the impedance or the circuit at this frequency. Draw the phasor diagram and indicate the various currents and voltages in the circuit. 8

Solution

(a) Refer to Sections 5.5 and 5.8.

(b) **Step I:** Calculation of I_N

Current through 10 Ω resistor is required. This resistance can be called load resistance R_L. Its terminals A and B are called load terminals. Removing the load resistance from the network and short circuiting the load terminals, we get the circuit as shown in Fig. 19.

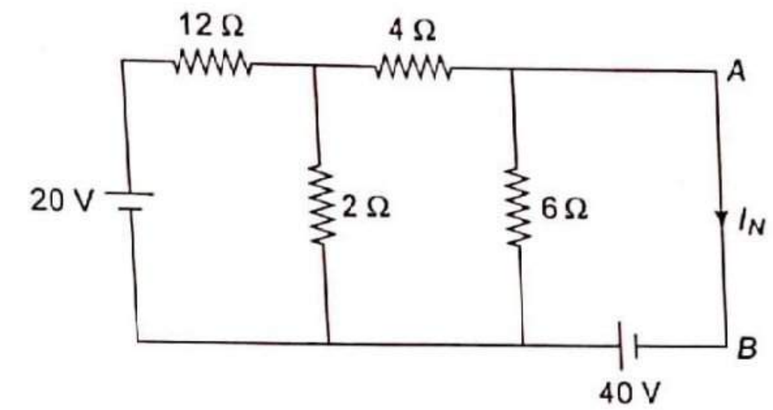

Fig. 19

In Fig. 19, current flowing through short circuit placed across the load terminals A and B is called Norton's current I_N. By source transformation, i.e. converting series combination of voltage source 20 V and resistor 12 Ω into equivalent parallel combination, we get the modified network as shown in Fig. 20.

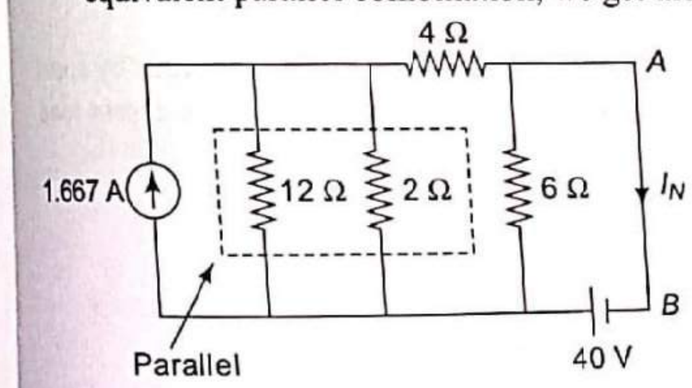

Fig. 20

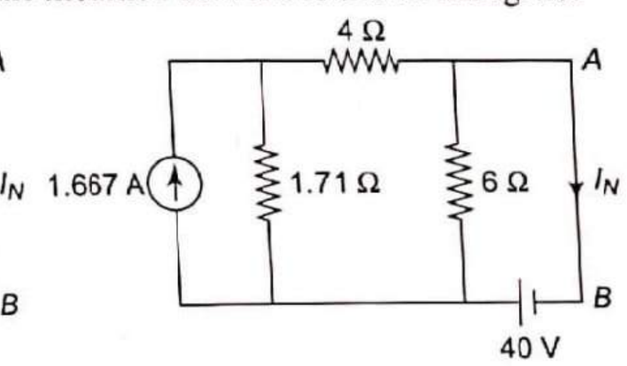

Fig. 21

Converting parallel combination of current source of 1.667 A and resistor 1.71 Ω into equivalent combination (in Fig. 21), we get the circuit shown in Fig. 22.

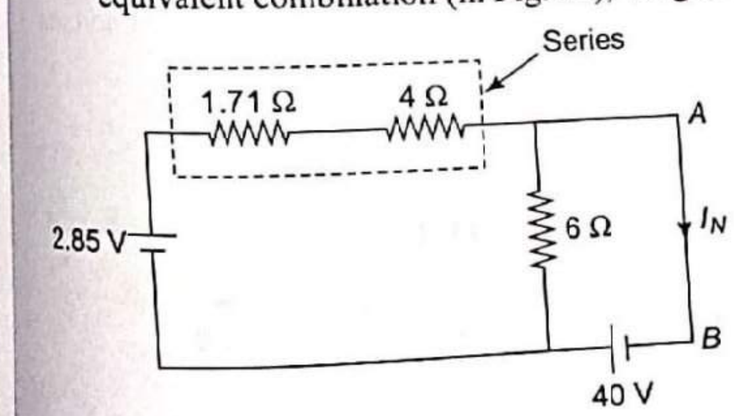

Fig. 22

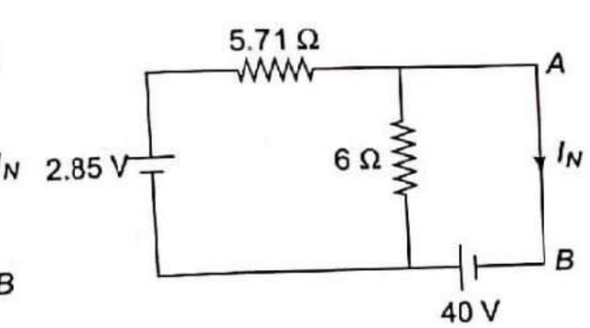

Fig. 23

Converting series combination of 2.85 V voltage source and 5.71 Ω resistor into equivalent combination (in Fig. 23), we get the circuit shown in Fig. 24. Converting parallel combination of current source of 0.45 A and 2.926 Ω resistor (in Fig. 25) into equivalent combination, we get circuit as shown in Fig. 26.

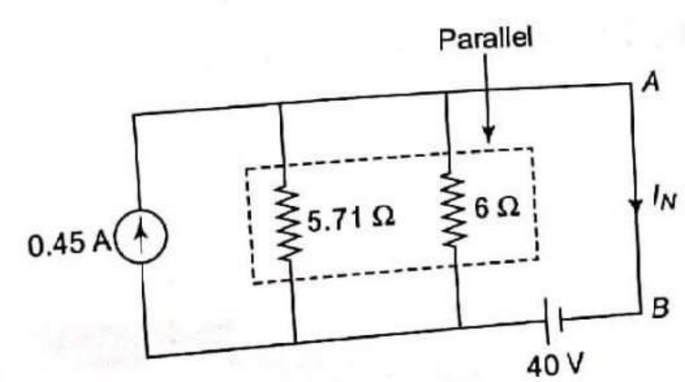

Fig. 24

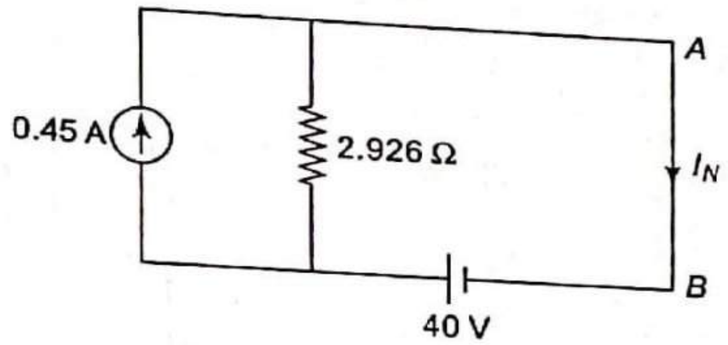

Fig. 25

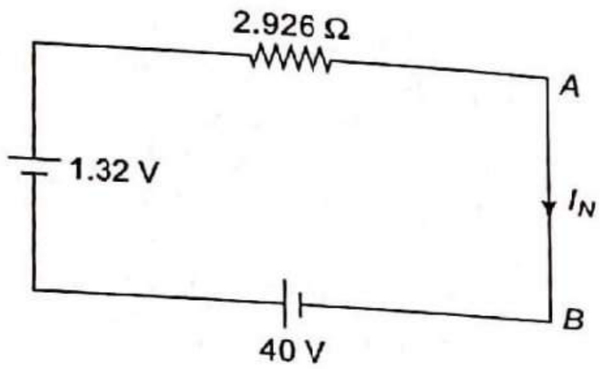

Fig. 26

Applying KVL to loop (in Fig. 26),

$$-2.926I_N + 40 + 1.32 = 0$$

So, $I_N = 14.12$ A

Step II: Calculation of R_N

Removing the load resistance from the network and replacing the voltage sources by short circuit, we get the network as shown in Fig. 27. In Fig. 27, equivalent resistance across load terminals A and B is called Norton's resistance R_N.

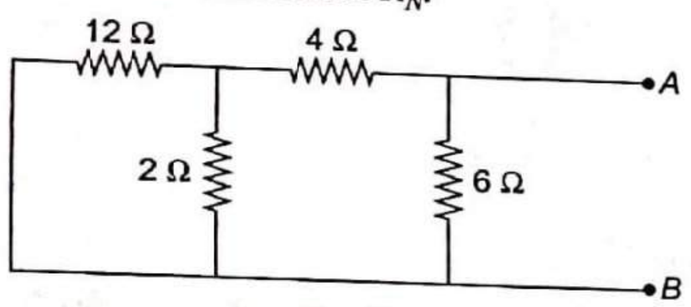

Fig. 27

In Fig. 27, resistors 12 Ω and 2 Ω are in parallel.

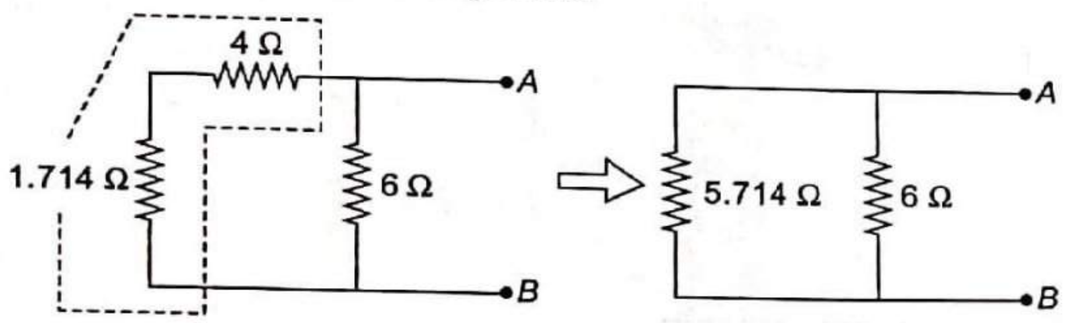

Fig. 28

So, $R_N = R_{AB} = (5.714 \parallel 6) = 2.927\ \Omega$

Step III: Norton's equivalent circuit

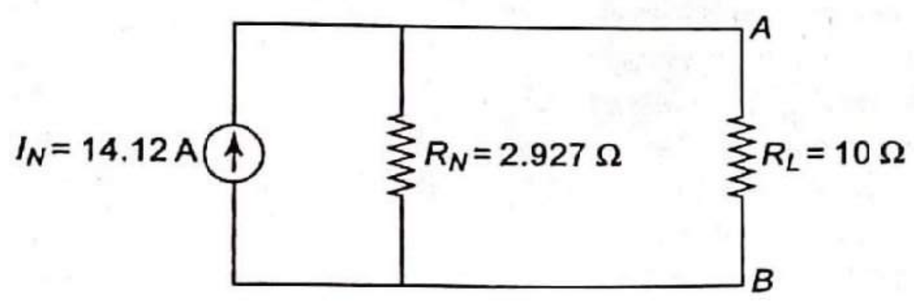

Fig. 29

By current division rule

$$I_{10\Omega} = \frac{14.12 \times 2.927}{(10 + 2.927)} = 3.2\text{A}(\downarrow)$$

(c) The conditions in the example are shown in Fig. 30.

When the total current taken from the supply is in phase with the supply voltage, then this condition is called as resonance and the supply frequency at which this condition occurs is called as resonance frequency (f_r).

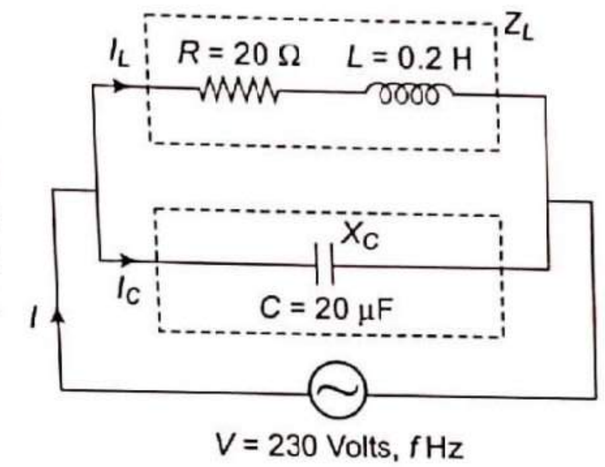

Fig. 30

$$f_r = \frac{1}{2\pi}\sqrt{\frac{1}{LC} - \frac{R^2}{L^2}}\ \text{Hz}$$

$$= \frac{1}{2\pi}\sqrt{\frac{1}{0.2 \times 20 \times 10^{-6}} - \frac{(20)^2}{(0.2)^2}}\ \text{Hz}$$

$$= 77.97\ \text{Hz}$$

Dynamic impedance of the circuit, Z_r,

$$Z_r = \frac{L}{CR} = \frac{0.2}{20 \times 10^{-6} \times 20} = 500\ \Omega$$

Circuit current or total current at resonance,

$$I_r = \frac{V}{Z_r} = \frac{230}{500} = 0.46\ \text{A}$$

Phasor diagram (see Fig. 31):

For phasor diagram, we need to calculate the values of branch currents (I_L and I_C). At resonance frequency:

$$X_L = 2\pi f_r L = 2\pi \times 77.97 \times 0.2 = 97.98\Omega$$

$$X_C = \frac{1}{2\pi f_r C} = \frac{1}{2\pi \times 77.97 \times 20 \times 10^{-6}} = 102.06\Omega$$

So,

$$\bar{Z}_L = (20 + j97.98)\ \Omega = (100\ \angle 78.463)\Omega$$

$$\bar{X}_C = (0 - j102.06)\Omega = (102.06\ \angle -90)\Omega$$

Now, branch currents;

Taking applied voltage V as reference

So, $\bar{V} = (230\angle 0)$

Now,

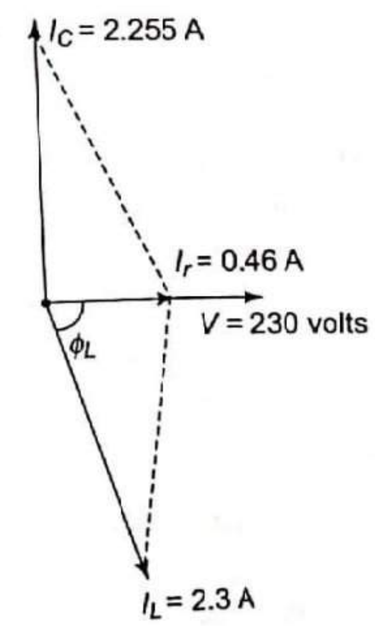

Fig. 31

$$\bar{I}_L = \frac{\bar{V}}{\bar{Z}_L} = \frac{(230\angle 0)}{(100\angle 78.463)} = (2.3\angle -78.463)\ \text{A}$$

$$\bar{I}_C = \frac{\bar{V}}{\bar{X}_C} = \frac{(230\angle 0)}{(102.06\angle -90)} = (2.255\angle 90)\ \text{A}$$

5. (a) A coil having a resistance of 20 Ω and an inductance of 0.2 H is connected across a 230 V, 50 Hz supply. Calculate 4

(i) circuit current
(ii) phase angle
(iii) power factor
(iv) power consumed

(b) A balanced three-phase delta connected load draws a power of 10 kW, with a power factor of 0.6 leading when supplied with an ac supply of 440 V, 50 Hz. Find the circuit elements of the load per phase assuming a simple series circuit of two elements. 8

(c) Draw and explain the phasor diagram of a single phase transformer on no-load. 8

Solution

(a) The conditions in the example are shown in Fig. 32.

(i) Let impedance of the coil be Z_{coil}.

Now, $L = 0.2\text{H}$

So, $X_L = 2\pi fL = 2\pi \times 50 \times 0.2 = 62.83\Omega$

$$Z_{coil} = \sqrt{R^2 + X_L^2} = \sqrt{(20)^2 + (62.83)^2} = 65.94\ \Omega$$

So, circuit current I can be calculated as:

$$I = \frac{V}{Z_{coil}} = \frac{230}{65.94} = 3.49\ \text{A}$$

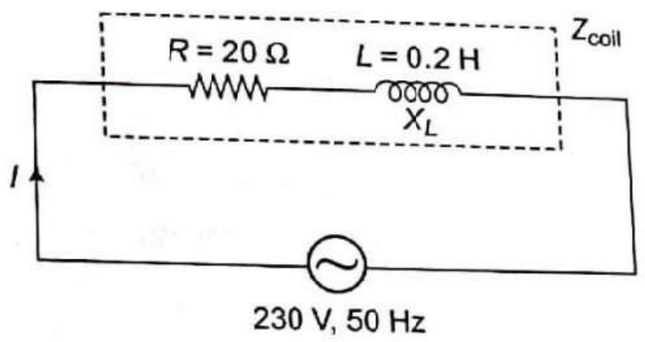

Fig. 32

(ii) Phase angle, $\phi = \tan^{-1}\dfrac{X_L}{R}$

$$= \tan^{-1}\frac{62.83}{20}$$

$$= 72.34$$

(iii) Power factor = $\cos\phi$

$= \cos 72.34 = 0.3034$ lagging

(iv) Power consumed,

$P = VI\cos\phi = 230 \times 3.49 \times \cos 72.34 = 243.51$ W

(b) We have

Balanced 3-ϕ, Δ-connected load

$P = 10\ \text{kW} = 10000$ W

$p_f = 0.6$ leading; i.e. capacitive load and $\phi = 53.13$

Supply voltage i.e. line voltage, $V_L = 440\text{V}, f = 50$ Hz

In Δ-connection, $V_{Ph} = V_L = 440$ V

Power, $P = 3V_{Ph}I_{Ph}\cos\phi$

$10000 = 3 \times 440 \times I_{Ph} \times 0.6$

So, $I_{Ph} = 12.626$ A

Now, phase impedance,

$$Z_{Ph} = \frac{V_{Ph}}{I_{Ph}} = \frac{440}{12.626} = 34.85\Omega$$

We know that Z_{Ph} is capacitive so it can be written in polar form as:

$$\overline{Z_{Ph}} = (34.85\angle -53.13)\Omega$$

$$\overline{Z_{Ph}} = (20.909 - j27.878)\Omega$$

i.e. $R = 20.909\ \Omega$ and $X_C = 27.878\ \Omega$

We have, $X_C = \dfrac{1}{\omega C}$

$$\text{So, } C = \frac{1}{\omega \times X_C} = \frac{1}{100\pi \times 27.878} = 1.1418 \times 10^{-4}\ \text{F}$$

Thus the values of two elements of the load per phase are as follows:

$R = 20.909\ \Omega \qquad C = 1.1418 \times 10^{-4}$ F

(c) Refer to Section 4.10.2.

6. (a) Explain the various losses of a single phase transformer. 4

(b) Two wattmeters connected to measure power in a three-phase circuit using the two wattmeter method indicate 1250 W and 250 W respectively. Find the total power supplied and the power factor of the circuit when 8

(i) both the readings are positive,

(ii) when the latter reading is obtained by reversing the connections of the pressure coil.

(c) A 200/400 V, 50 Hz single phase transformer gave the following test results:

OC test:	200 V	0.7 A	70 W	(on LV side)
SC test:	15 V	10 A	85 W	(on HV side)

8

Obtain the parameters and draw the equivalent circuit of the transformer as referred to the primary.

Solution

(a) Refer to Section 4.7.

(b) (i) Both the readings are positive:

$W_2 = 1250\ W$ and $W_1 = 250$ W

$P = W_1 + W_2 = 250 + 1250 = 1500$ W

$$\text{Now, phase angle, } \phi = \tan^{-1}\left\{\frac{\sqrt{3}\,(\text{Higher reading} - \text{Lower reading})}{\text{Lower reading} + \text{Higher reading}}\right\}$$

$$= \tan^{-1}\left\{\frac{\sqrt{3}(1250 - 250)}{250 + 1250}\right\} = \tan^{-1} 1.1547 = 49.11$$

So, power factor = $\cos 49.11 = 0.6547$

(ii) When latter reading is obtained by reversing the connections of the pressure coil i.e. $W = -250$ W

Now, Power, $P = W_1 + W_2 = -250 + 1250 = 1000$ W

$$\text{Phase angle, } \phi = \tan^{-1}\left\{\frac{\sqrt{3}\,(\text{Higher reading} - \text{Lower reading})}{\text{Lower reading} + \text{Higher reading}}\right\}$$

$$= \tan^{-1}\left\{\frac{\sqrt{3}(1250 - (-250))}{-250 + 1250}\right\} = \tan^{-1} 2.598 = 68.948$$

So, Power factor = $\cos 68.948 = 0.3592$

(c) From OC test:

The readings are: $V_1 = 200$ V, $I_0 = 0.7$ A, $W = 70$ Watt

We have $W = V_1 I_0 \cos \phi_0$

So, $\cos \phi_0 = \dfrac{W}{V_1 I_0} = \dfrac{70}{200 \times 0.7} = 0.5$

and $\sin \phi_0 = 0.866$

Also $I_W = I_0 \cos \phi_0 = 0.7 \times 0.5 = 0.35$ A

$I_\mu = I_0 \sin \phi_0 = 0.7 \times 0.866 = 0.606$ A

$R_0 = \dfrac{V_1}{I_W} = \dfrac{200}{0.35} = 571.4\,\Omega$

$X_0 = \dfrac{V_1}{I_\mu} = \dfrac{200}{0.606} = 330\,\Omega$

From SC test:

It may be noted that this test is conducted on HV side, i.e. instruments are placed on secondary and primary is short-circuited.

The readings are $V_{SC} = 15$ V, $I_2 = 10$ A, $W = 85$ Watt

We have $W = I_2^2 Ro_2$

So, $Ro_2 = \dfrac{W}{I_2^2} = \dfrac{85}{10^2} = 0.85\,\Omega$

$Zo_2 = \dfrac{V_{SC}}{I_2} = \dfrac{15}{10} = 1.5\,\Omega$

So, $Xo_2 = \sqrt{Zo_2^2 - Ro_2^2} = \sqrt{1.5^2 - 0.85^2} = 1.24\,\Omega$

Now, transformation ratio, $k = \dfrac{400}{200} = \dfrac{E_2}{E_1} = 2$

So, $Ro_1 = \dfrac{Ro_2}{k^2} = \dfrac{0.85}{(2)^2} = 0.21\,\Omega$

$Xo_1 = \dfrac{Xo_2}{k^2} = \dfrac{1.24}{(2)^2} = 0.31\,\Omega$

The equivalent circuit is shown in Fig. 33.

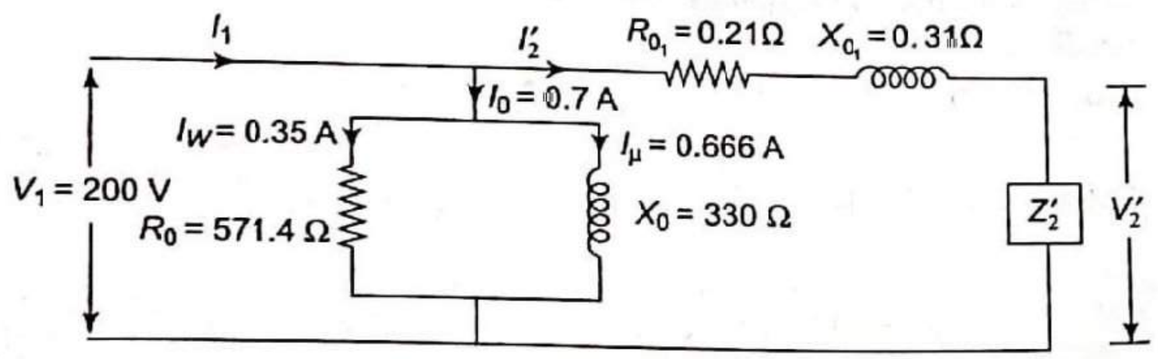

Fig. 33

December 2017

Time: 3 Hours [Total Marks : 80]

N.B.: (1) Question No. 1 is compulsory.
(2) Solve any three from remaining questions.
(3) Assume suitable data if necessary.
(4) Figures to the right indicate full marks.

1. Answer any five

(a) A voltage $v(t) = 282.85 \sin 100\pi t$ is applied to a coil, having resistance of 20 Ω in series with inductance of 31.83 mH. Find: 4
(i) RMS value of voltage,
(ii) RMS value of current,
(iii) power dissipated in the coil, and
(iv) power factor of the coil.

(b) Derive the relation between line voltage and phase voltage in star connected three-phase system. 4

(c) Find the node voltage V_2 by nodal analysis. 4

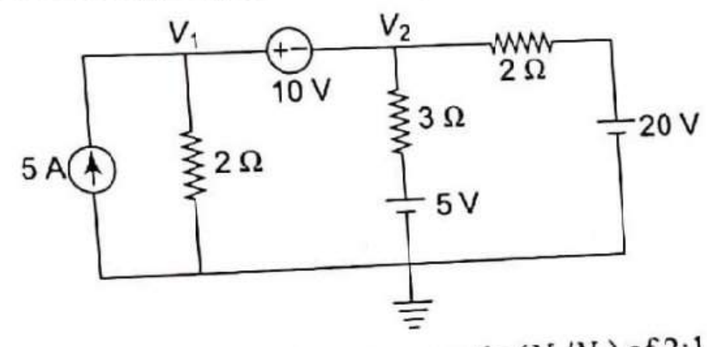

(d) A single phase transformer has a turns ratio (N_1/N_2) of 2:1 and is connected to a resistive load. Find the value of primary current (both magnitude and angle with reference to flux), if the magnetizing current is 1 A and the secondary current is 4 A. Neglect core losses and leakage reactance. Draw the corresponding phasor diagram. 4

(e) Find the Norton's equivalent of the given circuit across R_x. 4

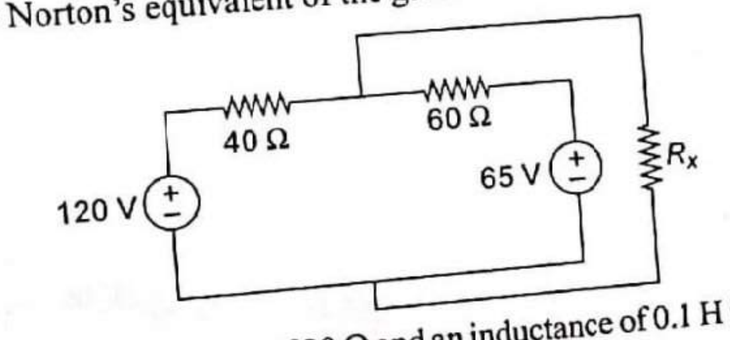

(f) A coil having a resistance of 20 Ω and an inductance of 0.1 H is connected in series with a 50 μF capacitor. An alternating voltage of 250 V is applied to the circuit. At what value of frequency will the current in the circuit be maximum? What is the value of this current? Also find the voltage across the inductor and quality factor. 4

Solution

(a) The conditions in the example are shown in Fig. 1.

Voltage applied to the coil is given as

$v(t) = 282.85 \sin 100\pi t$

So, $V_m = 282.85$ V

$\omega = 100\pi$ rad/sec

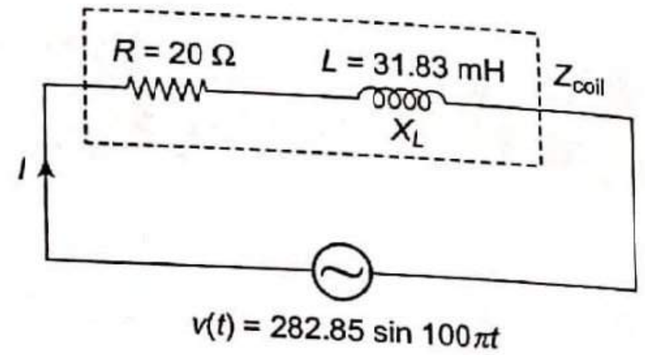

Fig. 1

Now, inductance of the coil,

$L = 31.83 \times 10^{-3}$ H

So, $X_L = \omega L = 100\pi \times 31.83 \times 10^{-3} = 10\ \Omega$

Let impedance of the coil be Z_{coil}

$$Z_{coil} = \sqrt{R^2 + X_L^2} = \sqrt{20^2 + 10^2} = 22.36\ \Omega$$

(i) RMS value of voltage

$$V = \frac{V_m}{\sqrt{2}} = \frac{282.85}{\sqrt{2}} = 200 \text{ V}$$

(ii) RMS value of current

$$I = \frac{V}{Z_{coil}} = \frac{200}{22.36} = 8.94 \text{ A}$$

(iii) Power dissipated in the coil

$P = I^2 \times R = (8.94)^2 \times 20$

$= 1.598$ kW

(iv) Power factor of the coil

$$\text{pf} = \frac{R}{Z_{coil}} = \frac{20}{22.36}$$

$= 0.894$ lagging

(b) Refer to Section 3.3.1.

(c) Marking the different nodes and assuming the unknown currents, we obtain the circuit as shown in Fig. 2.

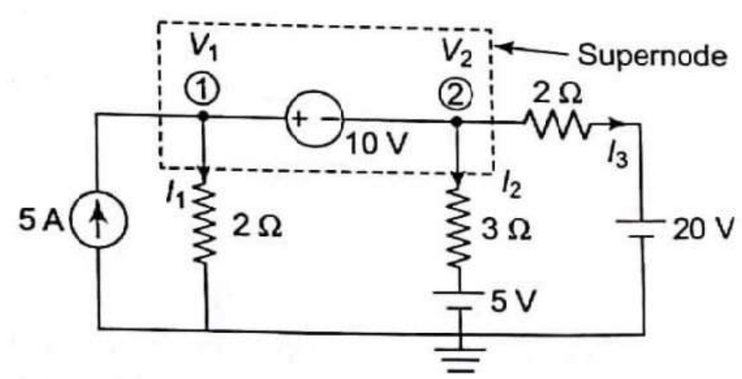

Fig. 2

Node 1 and Node 2 form the supernode

So, $V_2 + 10 = V_1$

or $V_1 - V_2 = 10$ (i)

Applying KCL at supernode, we get

$5 = I_1 + I_2 + I_3$

$$\frac{V_1 - 0}{2} + \frac{V_2 - 5}{3} + \frac{V_2 - 20}{2} = 5$$

$6V_1 + 10V_2 = 200$ (ii)

By solving Eqs (i) and (ii), we get

$V_2 = 8.75$ V

(d) Transformer has a turns ratio $\frac{N_1}{N_2} = \frac{2}{1}$ (given)

So, transformation ratio, $k = \frac{N_2}{N_1} = \frac{1}{2}$

Secondary current, $I_2 = 4$A (given)

The conditions in the example are shown in Fig. 3.

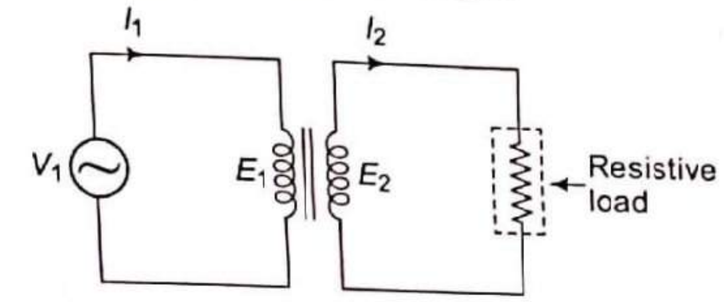

Fig. 3

The primary current is given as

$\bar{I}_1 = \bar{I}_0 + \bar{I}_2'$ where $\bar{I}_0 = \bar{I}_W + \bar{I}_\mu$

If we neglect the core loss and leakage reactance (as given), then

Iron loss (or working) component, $I_w = 0$ A

Now, magnetizing current, $I_\mu = 1$ A (given)

So, $I_0 = I_\mu = 1$ A

The magnitude of I_2' (called load component of primary current) is equal to KI_2 and it is always antiphase with I_2.

So, $I_2' = kI_2 = \frac{1}{2} \times 4 = 2$A

Phasor diagram

Without considering winding resistance and leakage reactance

From phasor diagram:

$\bar{I}_\mu = \bar{I}_0 = (1 \angle 0°)$ A

$\bar{I}_2' = (2 \angle 90°)$ A

So, $\bar{I}_1 = \bar{I}_0 + \bar{I}_2'$

$= (1 \angle 0) + (2 \angle 90)$

$= (1 + j0) + (0 + j2)$

$= (1 + j2) = (2.24 \angle 63.43)$

A

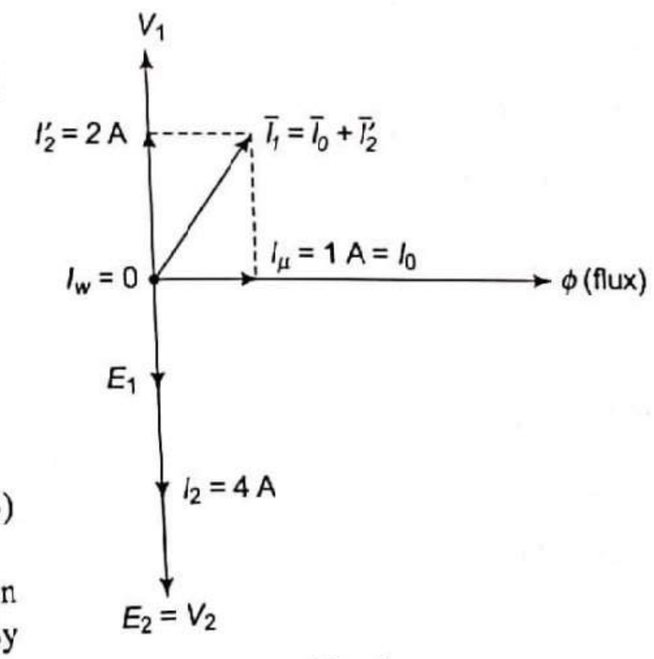

Fig. 4

(e) Norton's equivalent of the given circuit across R_x is required. By marking the load terminals as A and B, we get the circuit as shown in Fig. 5.

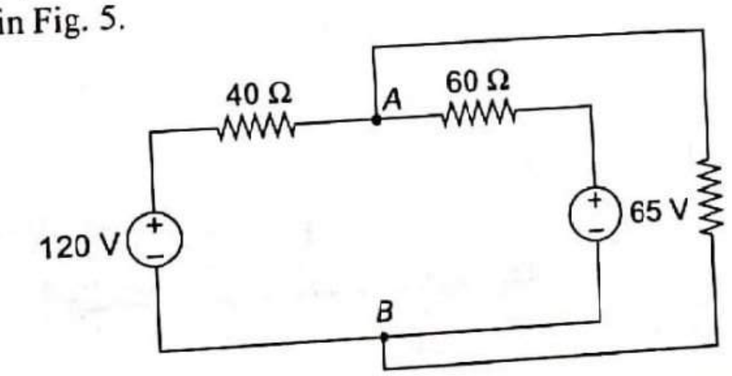

Fig. 5

Step I: Calculation of I_N

Removing the load resistance R_x from the network and short-circuiting the load terminals, we get the modified network as shown in Fig. 6.

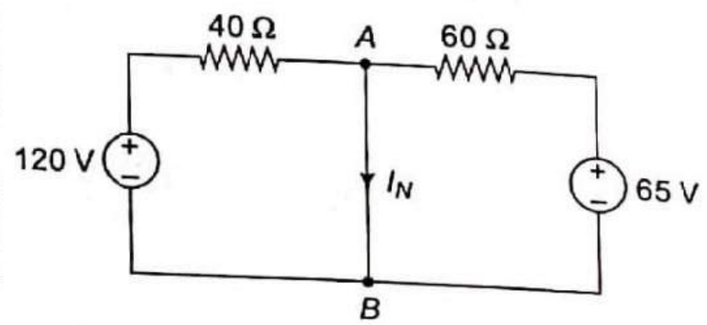

Fig. 6

In Fig. 6, current flowing through short circuit placed across A and B is called Norton's current I_N. This current can be calculated by superposition theorem.

When 120 V is acting alone, replacing 65 V by short circuit, we get the circuit as shown in Fig. 7.

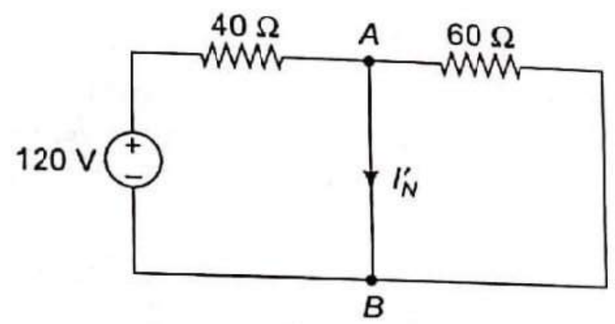

Fig. 7

Resistor 60 Ω gets short-circuited (in Fig. 7)

So, $$I'_N = \frac{120}{40} = 3\text{A, from A to B}$$

Now, when 65 V is acting alone, replacing 120 V by short circuit, we get the circuit as shown in Fig. 8.

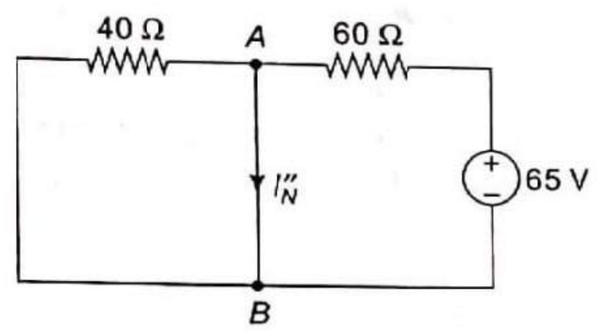

Fig. 8

Resistor 40 Ω gets short-circuited (in Fig. 8)

So, $$I''_N = \frac{65}{60} = 1.08\text{ A, from A to B}$$

Now, by superposition theorem,

$$I_N = I'_N + I''_N = 3 + 1.08 = 4.08\text{ A,}$$

from A to B

Step II: Calculation of R_N

Replacing the load resistance R_x from the network and replacing the voltage sources by short circuits, we get the network as shown in Fig. 9.

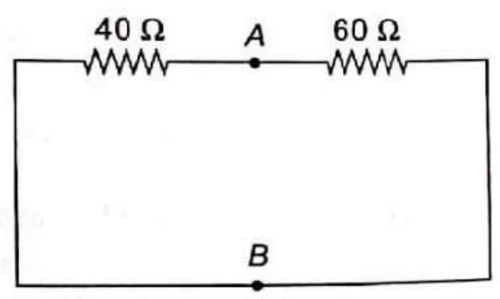

Fig. 9

So, Norton's resistance, $R_N = 40 \parallel 60$

$$= \frac{40 \times 60}{40 + 60} = 24\ \Omega$$

Step III: Norton's equivalent circuit

Norton's equivalent circuit can be drawn as shown in Fig. 10.

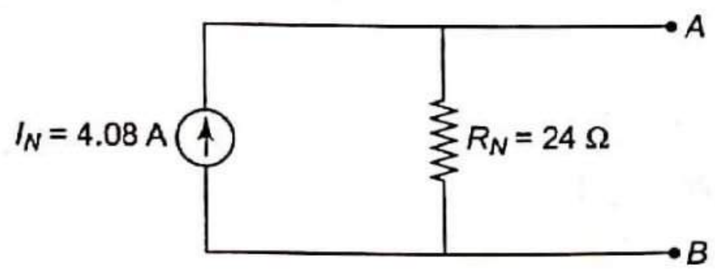

Fig. 10

(f) A coil is connected in series with capacitor. The resultant circuit is a series R-L-C circuit (see Fig. 11).

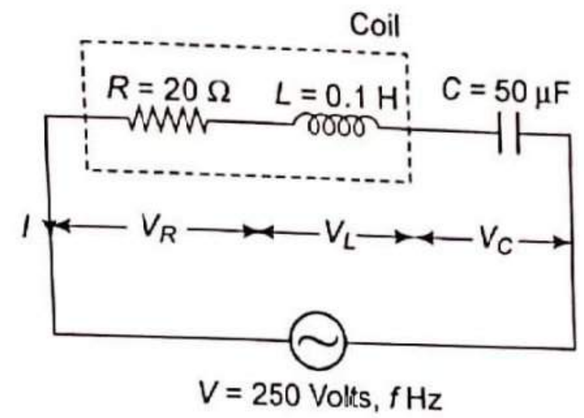

Fig. 11

The value of frequency is required, so that maximum current flows in the circuit (i.e. resonance occurs in the circuit). Thus, resonance frequency,

$$f_r = \frac{1}{2\pi\sqrt{LC}} = \frac{1}{2\pi\sqrt{0.1 \times 50 \times 10^{-6}}} = 71.18\text{ Hz}$$

At resonance, circuit current is given as

$$I_r = \frac{V}{R} = \frac{250}{20} = 12.5\text{ A}$$

At resonance, voltage across the inductor

$$V_L = I_r \times X_L = I_r \times 2\pi f_r L$$

$$= 12.5 \times 2\pi \times 71.18 \times 0.1 = 559.05\text{ V}$$

Quality factor (Q) can be calculated as

$$Q = \frac{V_L}{V} = \frac{559.09}{250} = 2.24$$

2. (a) With necessary diagrams, prove that three-phase power can be measured by only two wattmeters. Also prove that reactive power can be measured from the wattmeter readings. **10**

(b) A circuit has $L = 0.2$ H and inductive resistance 20 Ω is connected in parallel with 200 μF capacitor with variable frequency, 230 V supply. Find the resonant frequency and impedance at which the total current taken from the supply is in phase with supply voltage. Draw the phasor diagram and derive the formula used (both impedance and frequency). Also find the value of the supply current and the capacitor current. **10**

Solution

(a) Refer to Section 3.6.2.

(b) The conditions in the example are shown in Fig. 12.

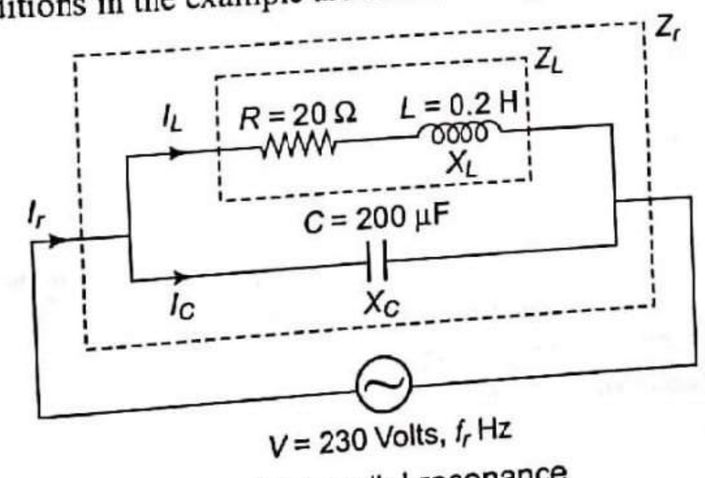

Fig. 12 Parallel resonance

At resonance frequency, the total current taken from the supply voltage (i.e. I_r is in phase with V). The resonance frequency (f_r) can be calculated as:

$$f_r = \frac{1}{2\pi}\sqrt{\frac{1}{LC} - \frac{R^2}{L^2}} = \frac{1}{2\pi}\sqrt{\frac{1}{0.2\times 200\times 10^{-6}} - \frac{(20)^2}{(0.2)^2}}$$

$$= \frac{1}{2\pi}\sqrt{15000} = 19.49 \text{ Hz}$$

Dynamic impedance of the circuit,

$$Z_r = \frac{L}{CR} = \frac{0.2}{200\times 10^{-6}\times 20} = 50\,\Omega$$

For phasor diagram, we need to calculate total circuit current (I_r), branch currents (I_L and I_C), and phase angle of the coil (Φ_L).

Now, circuit current (I_r) at resonance,

$$I_r = \frac{V}{Z_r} = \frac{230}{50} = 4.6 \text{ A}$$

$$I_L = \frac{V}{Z_L} = \frac{230}{\sqrt{(20)^2 + (2\pi\times 19.49\times 0.2)^2}} = \frac{230}{31.62} = 7.274 \text{ A}$$

$$I_C = \frac{V}{X_C} = \frac{230}{\dfrac{1}{(2\pi\times 19.49\times 200\times 10^{-6})}} = \frac{230}{40.83} = 5.63 \text{ A}$$

Phase angle of the coil,

$$\Phi_L = \tan^{-1}\frac{X_L}{R} = \tan^{-1}\frac{(2\pi f_r L)}{R}$$

$$= \tan^{-1}\frac{(2\pi\times 19.49\times 0.2)}{20} = \tan^{-1}\frac{24.49}{20}$$

So, $\Phi_L = 50.76$

Phasor diagram

Taking V as reference phasor we know that

$$\bar{I}_r = \bar{I}_L + \bar{I}_C$$

Now, $I_L = 7.274$ A $I_C = 5.63$ A $I_r = 4.6$ A
$\Phi_L = 50.76°$

Taking scale 1 cm = 1 A, the phasor diagram can be drawn as shown in Fig. 13.

For the derivation of the formulas used for resonance frequency and impedance at resonance (i.e. Z_r) refer to Section 2.3.4.

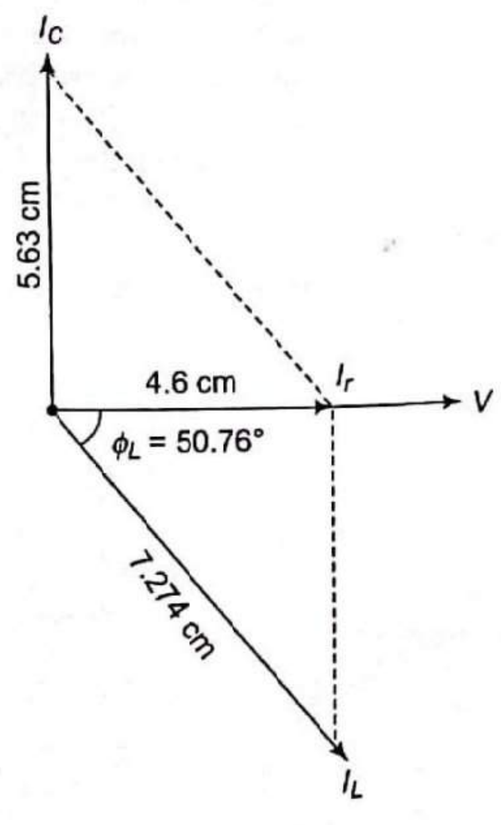

Fig. 13

3. (a) Two impedances $14 + j5\Omega$ and $18 + j10\Omega$ are connected in parallel across 200 V, 50 Hz, single phase supply. Determine: **10**
   (i) admittance of each branch in polar form,

   (ii) current in each branch in polar form,
   (iii) power factor of each branch,
   (iv) active power in each branch, and
   (v) reactive power in each branch.

   (b) Derive the emf equation of a single phase transformer. Find the value of the maximum flux in a 25 kVA, 3000/240V, single phase transformer with 500 turns on the primary. The primary winding is connected to 3000 V, 50 Hz supply. Find primary and secondary currents. Neglect all voltage drops. **6**

   (c) Compare core type and shell type transformer (any four points). **4**

Solution

(a) The conditions in the example are shown in Fig. 14.

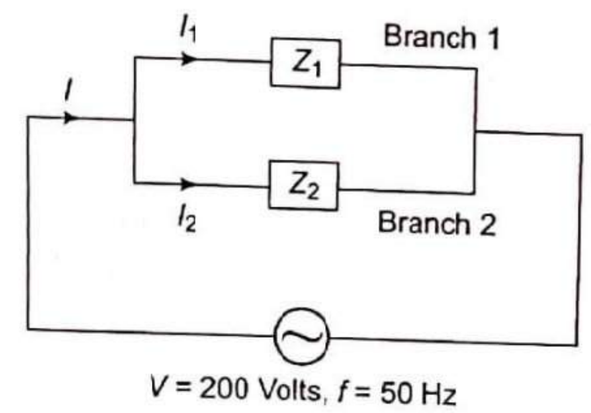

Fig. 14

Let $\bar{Z}_1 = (14 + j5)\Omega$

$= (14.87 \angle 19.65\ \Omega$

$\bar{Z}_2 = (18 + j10)\Omega$

$= (20.59\angle 29.05)\Omega$

Taking applied voltage as reference,

$\bar{V} = (200\ \angle 0)$ V

(i) Admittance of branch 1,

$$\bar{Y}_1 = \frac{1}{\bar{Z}_1} = \frac{1}{(14.87\ \angle 19.65)} = (0.0672\ \angle -19.65)\mho$$

Admittance of branch 2,

$$\bar{Y}_2 = \frac{1}{\bar{Z}_2} = \frac{1}{(20.59\angle 29.05)} = (0.0486\angle -29.05)\mho$$

(ii) Branch current, $\bar{I}_1 = \dfrac{\bar{V}}{\bar{Z}_1} = \dfrac{(200\angle 0)}{(14.87\angle 19.65)} = (13.45\angle -19.65)$A

Branch current, $\bar{I}_2 = \dfrac{\bar{V}}{\bar{Z}_2} = \dfrac{(200\angle 0)}{(20.59\angle 29.05)} = (9.71\angle -29.05)$A

(iii) Power factor of branch 1,
$(\text{pf})_1 = \cos\phi_1 = \cos 19.65 = 0.942$ lagging
Power factor of branch 2,
$(\text{pf})_2 = \cos\phi_2 = \cos 29.05 = 0.874$ lagging

(iv) Active power of branch 1,

$P_1 = VI_1\cos\phi_1$
$= 200 \times 13.45 \times \cos 19.65$
$= 2534$ W $= 2.534$ kW

or

$P_1 = I_1^2 \times R_1$
$= (13.45)^2 \times 14$
$= 2534$ W $= 2.534$ kW

Active power of branch 2

$P_2 = VI_2\cos\phi_2$
$= 200 \times 9.71 \times \cos 29.05$
$= 1697$ W $= 1.697$ kW

or

$P_2 = I_2^2 \times R_2 = (9.71)^2 \times 18$
$= 1697$ W $= 1.697$ kW

(v) Reactive power of branch 1

$Q_1 = VI_1 \sin \phi_1$

$= 200 \times 13.45 \times \sin 19.65 = 904.56$ VAR $= 0.90456$ kVAR

Reactive power of branch 2

$Q_2 = VI_2 \sin \phi_2$

$= 200 \times 9.71 \times \sin 29.05 = 942.98$ VAR $= 0.94298$ kVAR

(b) For derivation of emf equation of a single phase transformer, refer to Section 4.4.

Transformer rating is given as 25 kVA, 3000/240V.

Primary turns, $N_1 = 500$ (given)

Primary winding is connected to 3000 V, 50 Hz supply

i.e $V_1 \cong E_1 = 3000$ V; $f = 50$ Hz

The emf equation of a transformer is:

$$E_1 = 4.44 f N_1 \phi_m$$

$$\text{So, } \phi_m = \frac{E_1}{4.44 f N_1} = \frac{3000}{4.44 \times 50 \times 500} = 0.027 \text{ Wb}$$

$$\text{Now, kVA rating} = \frac{E_1 I_1}{1000} \quad \therefore \quad 25 = \frac{3000 \times I_1}{1000}$$

So, $I_1 = 8.3$ A

$$\text{Also, kVA rating} = \frac{E_2 I_2}{1000} \quad \therefore \quad 25 = \frac{240 \times I_2}{1000}$$

So, $I_2 = 104.17$ A

(c) Refer to Section 4.3.

4. (a) An alternating voltage is represented by $v(t) = 141.4 \sin(377t)$ V. Derive the RMS value of this voltage. Find: **8**

(i) instantaneous value at $t = 3$ ms and

(ii) The time taken for the voltage to reach 70.7 V for the first time.

(b) State superposition theorem. Find I_x using superposition theorem without using source transformation technique. **12**

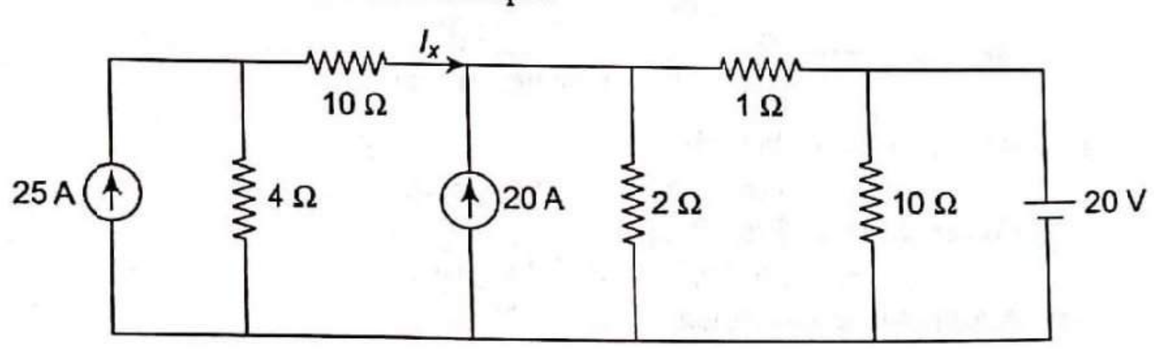

Solution

(a) The equation of alternating current is given as

$v(t) = 141.4 \sin(377t)$

From equation, $V_m = 141.4$ V

$$\text{So, RMS value, } V = \frac{V_m}{\sqrt{2}} = \frac{141.4}{\sqrt{2}} = 100 \text{ V}$$

Instantaneous value at $t = 3$ ms

$$v(t) = 141.4 \sin(377t) = 141.4 \sin\left[377 \times 3 \times 10^{-3} \times \frac{180}{\pi}\right]^{\circ} = 127.94 \text{ V}$$

Figure 15 shows the waveform of the given alternating voltage. Let the voltage become 70.7 V for the first time after t sec. Then

$v(t) = 141.4 \sin(377t)$

$70.7 = 141.4 \sin(377 \times t)$

$$70.7 = 141.4 \sin\left(377 \times t \times \frac{180}{\pi}\right)^{\circ}$$

or $t = 0.00139$ sec $= 1.39$ mSec

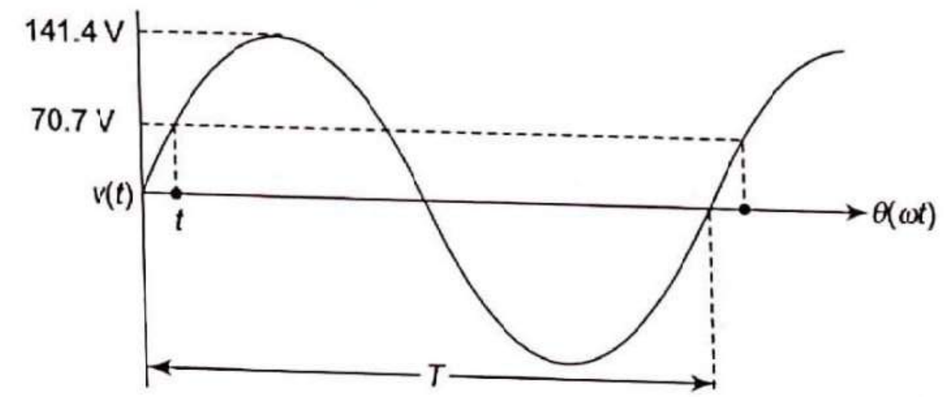

Fig. 15

(b) **Step I:** Considering 25 A source is acting alone, replacing 20 A source by open circuit and 20 V source by short circuit, we get the circuit as shown in Fig. 16.

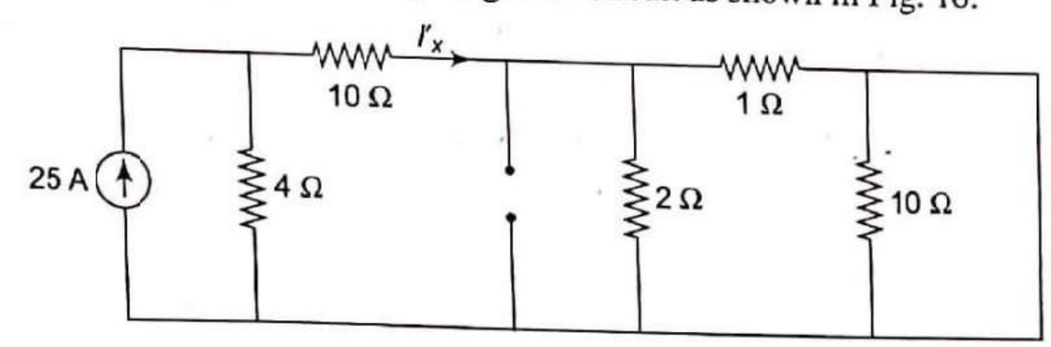

Fig. 16

Resistor 10 Ω gets short-circuited. For circuit simplification 10 Ω resistor can be removed. By removing 10 Ω resistor, we get the circuit as shown in Fig. 17.

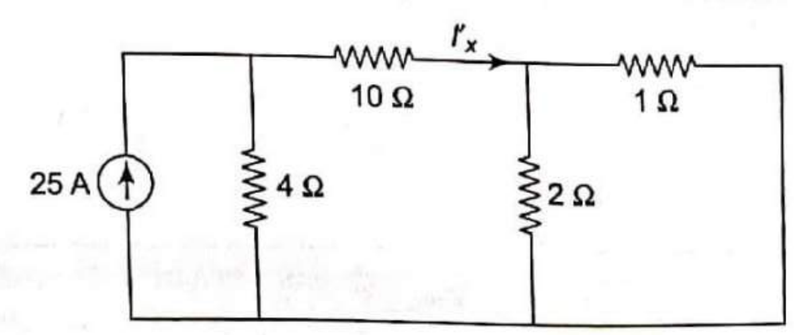

Fig. 17

Now, replacing parallel combination (2Ω || 1Ω = 0.667 Ω), we get the circuit shown in Fig. 18.

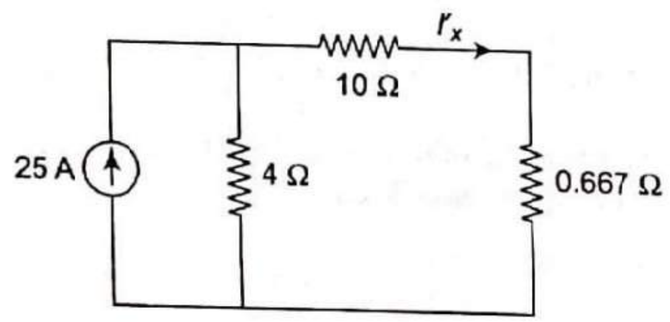

Fig. 18

By current division rule,

$$I'_x = \frac{25 \times 4}{4 + (10 + 0.667)} = 6.82\text{A}(\rightarrow)$$

Step II: Considering 20 A source is acting alone, replacing 25 A source by open circuit and 20 V source by short circuit, we get the circuit as shown in Fig. 19.

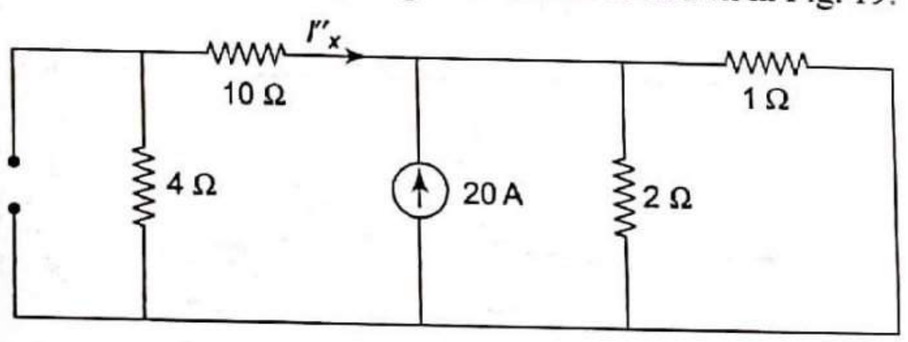

Fig. 19

In Fig. 19, we have one series combination (10 Ω + 4 Ω) and one parallel combination (2 Ω ∥ 1 Ω). Replacing them we get the circuit as shown in Fig. 20.

By current division rule, we get

$$I''_x = -\left(\frac{20 \times 0.667}{14 + 0.667}\right) = -0.909\text{ A}$$

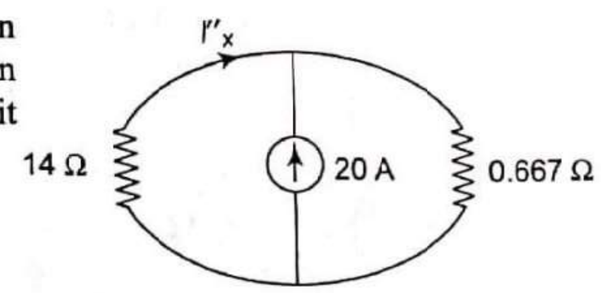

Fig. 20

Step III: Considering 20 V source is acting alone, replacing 25 A source and 20 A source by open circuits, we get the circuit shown in Fig. 21.

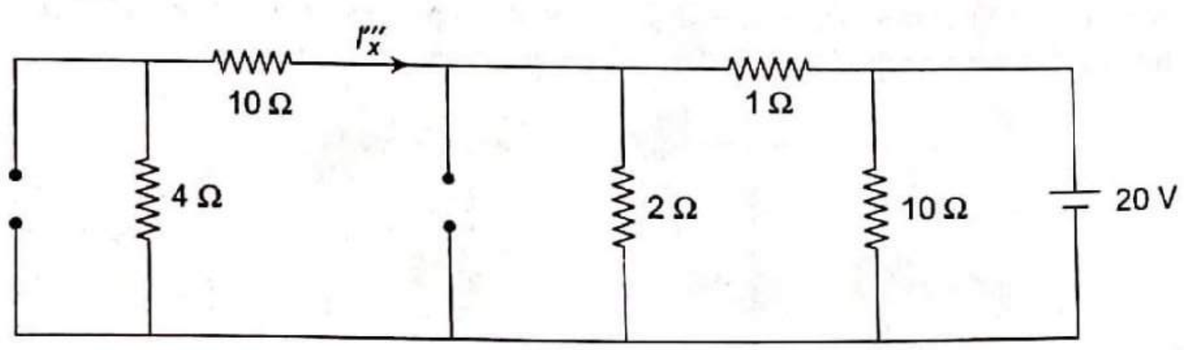

Fig. 21

Current I'''_x can be calculated by nodal analysis. By marking the different nodes and assuming the unknown currents we get the circuit as shown in Fig. 22.

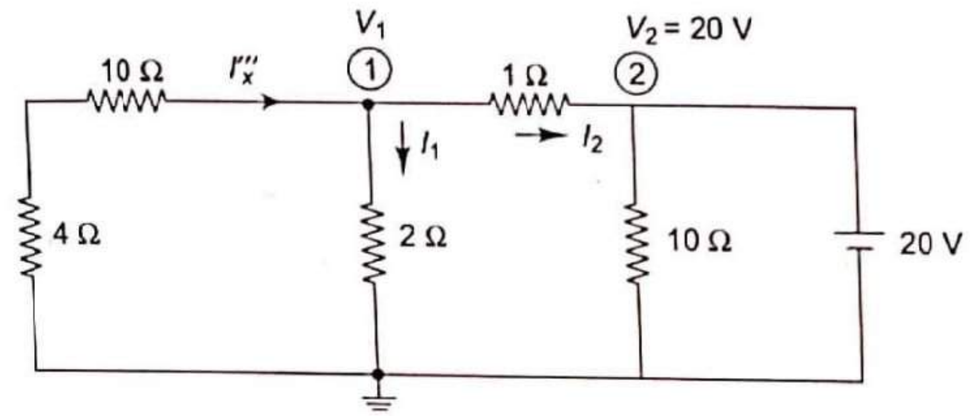

Fig. 22

From circuit diagram, $V_2 = 20$ V (i)

By applying KCL at Node 1, we get

$$I'''_x = I_1 + I_2$$

$$\frac{0 - V_1}{(4+10)} = \frac{V_1 - 0}{2} + \frac{V_1 - V_2}{1}$$

By putting $V_2 = 20$ V we get

$$\frac{0 - V_1}{(4+10)} = \frac{V_1 - 0}{2} + \frac{V_1 - 20}{1}$$

So, $V_1 = 12.73$ V

$$\text{And, } I'''_x = \frac{0 - V_1}{(4+10)} = \frac{0 - 12.73}{(4+10)} = -0.999\text{ A}$$

According to superposition theorem, resultant current I_x is algebraic sum of currents due to individual sources acting alone. Hence,

$$I_x = I'_x + I''_x + I'''_x$$

$$= 6.82\text{ A} + (-0.909\text{ A}) + (-0.909\text{ A}) = 5\text{ A}$$

5. (a) State and prove maximum power transfer theorem. Find the value of the resistance R_L using maximum power transfer theorem and find the value of maximum power transferred. **10**

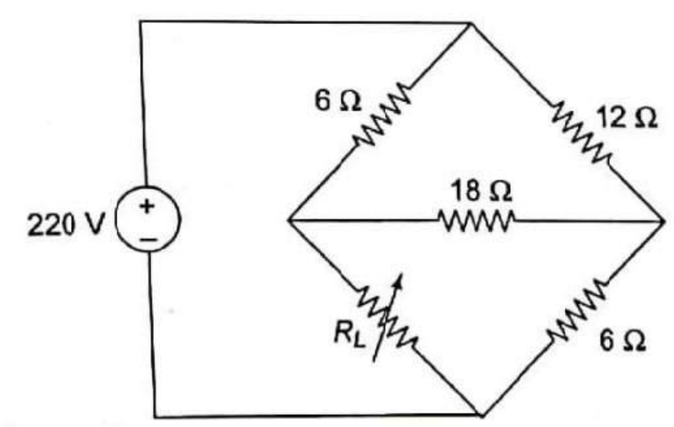

(b) A balanced load of phase impedance 100 Ω and power factor 0.8 (lag) is connected in delta to a 400 V, three-phase supply. Calculate: **10**

(i) phase current and line current,

(ii) active power and reactive power.

If the load is reconnected in star across the same supply, find

(iii) phase voltage and line voltage, and

(iv) phase current and line current. What will be the wattmeter readings if the power is measured by two wattmeter method (either star or delta)?

Solution

(a) For statement and proof of maximum power transfer theorem, refer to Section 1.19. According to maximum power transfer theorem, maximum power will be transferred from the circuit to the load resistance R_L when R_L is made equal to R_{TH}, the Thevenin's resistance of the circuit at terminals A and B. Load terminals are marked as A and B.

Step I: Calculation of R_{TH}

Removing the load resistance R_L from the network and replacing the voltage source by short circuit, we get the network as shown in Fig. 23. In Fig. 23, equivalent resistance across load terminals A and B is called Thevenin's resistance R_{TH}.

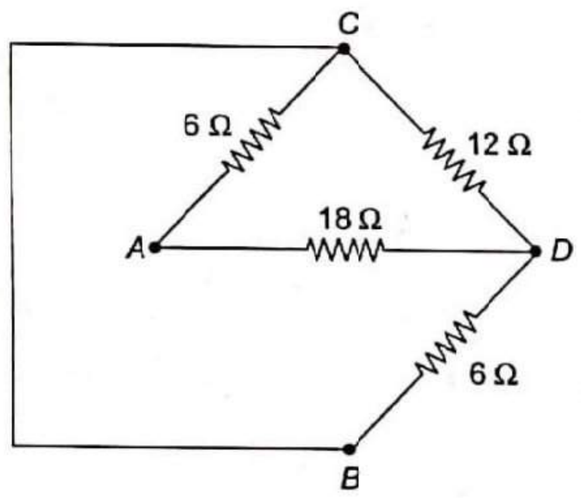

Fig. 23

In Fig. 23, nodes B and C are same, and by joining them, the circuit of Fig. 23 can be simplified to as shown in Fig. 24.

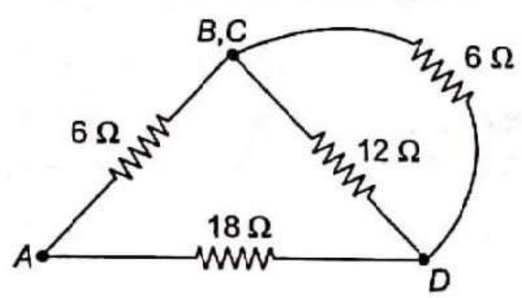

Fig. 24

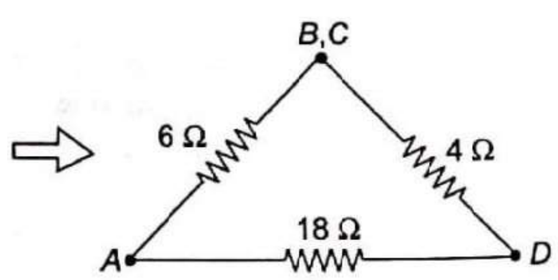

Fig. 25

In Fig. 24, resistors 12 Ω and 6 Ω are in parallel across B and D. In Fig. 25, resistors 18 Ω and 4 Ω are in series.

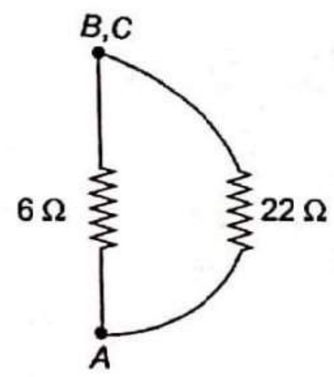

Fig. 26

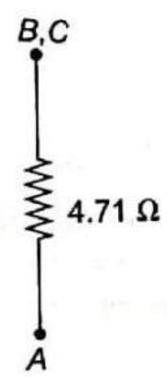

Fig. 27

So, when $R_L = R_{TH} = 4.71\ \Omega$, power transfer will be maximum.

Step II: Calculation of V_{TH}

Removing the load resistance from the network, we get the circuit as shown in Fig. 28.

In Fig. 28, the voltage appears across load terminals A and B, which is called Thevenin's voltage V_{TH}. For calculation of V_{TH}, i.e. V_{AB}, the selected path from A to B is marked by dotted line. As this path contains the resistors 18 Ω and 6 Ω, current through these resistances are required. By mesh analysis, these currents can be calculated as:

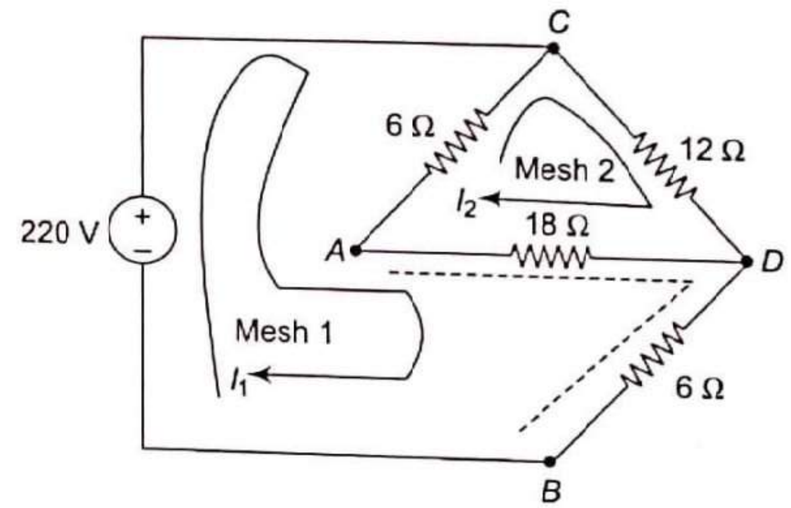

Fig. 28

Applying KVL to Mesh 1, we get

$$220 - 6(I_1 - I_2) - 18\,(I_1 - I_2) - 6I_1 = 0$$

$$-30I_1 + 24I_2 = -220 \qquad \text{(i)}$$

Applying KVL to Mesh 2, we get

$$-12I_2 - 18(I_2 - I_1) - 6(I_2 - I_1) = 0$$

$$24I_1 - 36I_2 = 0 \qquad \text{(ii)}$$

From Eqs (i) and (ii), we get

$$I_1 = 15.71\text{ A} \qquad I_2 = 10.47\text{ A}$$

Now, we have,

$$V_{TH} = V_{AB} = 6I_1 + 18(I_1 - I_2)$$

$$= 6(15.71) + 18(15.71 - 10.47) = 188.58\text{ V}$$

Hence, maximum power, P_{max}, is given as

$$P_{max} = \frac{V_{TH}^2}{4R_{TH}} = \frac{(188.58)^2}{4 \times 4.71} = 1887.6\text{ W} = 1.89\text{ kW}$$

(b) Three-phase, delta-connected balanced load is connected to a 400 V, three-phase supply as shown in Fig. 29. Let the phase impedance be Z_{Ph}.

The magnitude of $Z_{Ph} = 100\ \Omega$ and power factor is 0.8 lagging.

So, $\overline{Z_{Ph}} = (100\angle 36.86)\Omega$

Supply voltage is line voltage.

So, $V_L = 400$ V

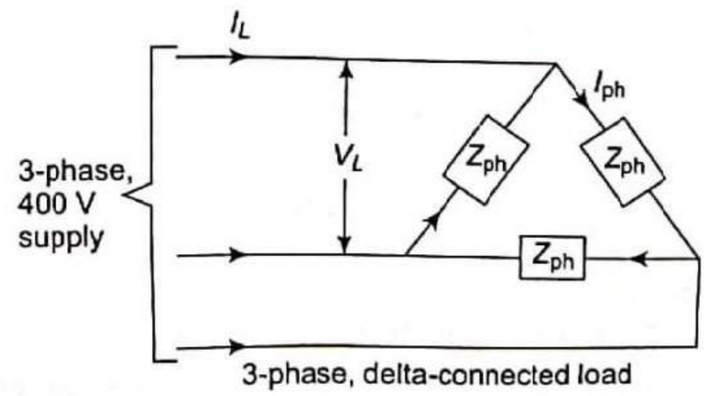

Fig. 29

(i) In Δ-connection,

$$V_{Ph} = V_L = 400\text{ V}$$

SMT. INDIRA GANDHI COLLEGE OF ENGINEERING LIBRARY Navi Mumbai

Phase current, $I_{Ph} = \frac{V_{Ph}}{Z_{Ph}} = \frac{400}{100} = 4A$

Line current, $I_L = \sqrt{3} \times I_{Ph} = \sqrt{3} \times 4 = 6.93$ A

(ii) Active power, $P = \sqrt{3} V_L I_L \cos\phi$

$= \sqrt{3} \times 400 \times 6.93 \times \cos 36.86 = 3.84$ kW

Reactive power, $Q = \sqrt{3}\, V_L I_L \sin\phi$

$= \sqrt{3} \times 400 \times 6.93 \times \sin 36.86 = 2.88$ kVAR

(iii) If the load is reconnected is star across the same supply, then we get the circuit as shown in Fig. 30.

As supply voltage remains same,

Line voltage, $V_L = 400$ V

Phase voltage, $V_{Ph} = \frac{V_L}{\sqrt{3}} = \frac{400}{\sqrt{3}}$

$= 230.94$ V

(iv) Phase current,

$$I_{Ph} = \frac{V_{Ph}}{Z_{Ph}} = \frac{230.94}{100} = 2.31 \text{ A}$$

Line current, $I_L = I_{Ph} = 2.31$ A

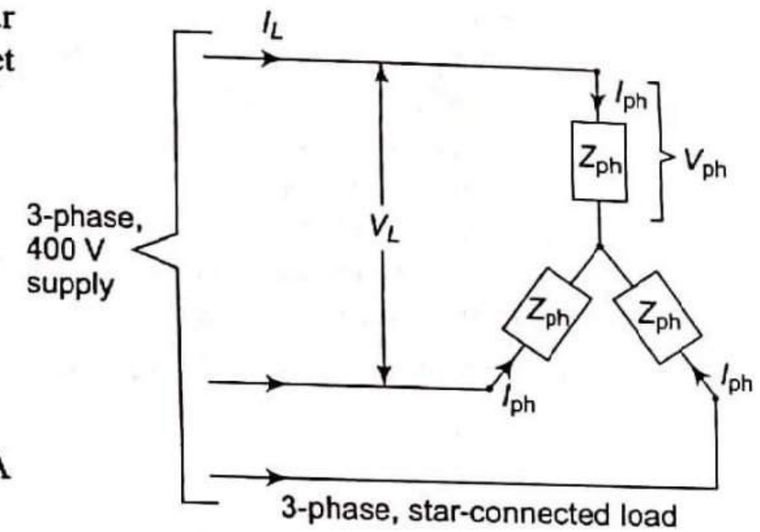

Fig. 30

If power is measured by two-wattmeter method (let in star-connected load), then wattmeter readings are given as:

Wattmeter reading, $W_1 = V_L I_L \cos(30 + \phi)$

$= 400 \times 2.31 \times \cos(30 + 36.86) = 363.11$ W

Wattmeter reading, $W_2 = V_L I_L \cos(30 - \phi)$

$= 400 \times 2.31 \times \cos(30 - 36.86) = 971.38$ W

6. (a) The readings when open circuit and short circuit tests are conducted on a 4 kVA, 200/400 V, 50 Hz single phase transformer are given below. Find the equivalent circuit parameters and draw the equivalent circuit referred to primary. Also find the transformer efficiency and regulation at full load and half load for 0.8 pf lagging. **12**

OC test on LV side	200 V	0.7 A	70 W
SC test on HV side	15 V	10 A	85 W

(b) With neat diagram explain the main parts of dc machine. Mention the functions of each part. **8**

Solution

(a) **Step I: Equivalent circuit referred to primary:**

From OC test:

The test is carried on LV side. The instrument readings are:

$V_1 = 200$ V, $I_0 = 0.7$ A, $W = 70$ Watt

We have,

$W = V_1 I_0 \cos\phi_0$

So, $\cos\phi_0 = \frac{W}{V_1 I_0} = \frac{70}{200 \times 0.7} = 0.5$

and $\sin\phi_0 = 0.866$

Now, $I_w = I_0 \cos\phi_0 = 0.7 \times 0.5 = 0.35$A

$I_\mu = I_0 \sin\phi_0 = 0.7 \times 0.866 = 0.6062$A

Hence, $R_0 = \frac{V_1}{I_w} = \frac{200}{0.35} = 571.4\Omega$ $\quad X_0 = \frac{V_1}{I_\mu} = \frac{200}{0.6062} = 329.92\Omega$

From SC test:

The test is carried out on HV side i.e. secondary side. The readings are given as:

$V_{sc} = 15$ V, $I_2 = 10$A, $W = 85$ Watt

Now, $W = I_2^2 R_{O_2}$

So, $R_{O_2} = \frac{W}{I_2^2} = \frac{85}{(10)^2} = 0.85\Omega$ $\quad Zo_2 = \frac{V_{SC}}{I_2} = \frac{15}{10} = 1.5\,\Omega$

Now, $Xo_2 = \sqrt{Zo_2^2 - Ro_2^2} = \sqrt{(1.5)^2 - (0.85)^2} = 1.236\,\Omega$

Now, transformation ratio, $k = \frac{E_2}{E_1} = \frac{400}{200} = 2$

So, $Ro_1 = \frac{Ro_2}{k^2} = \frac{0.85}{(2)^2} = 0.2125\,\Omega$

$$Xo_1 = \frac{Xo_2}{k^2} = \frac{1.236}{(2)^2} = 0.31\,\Omega$$

The equivalent circuit referred to primary side is as shown in Fig. 31.

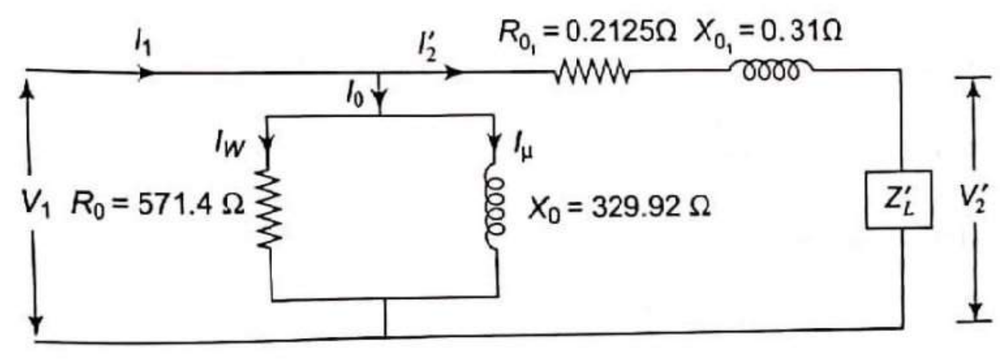

Fig. 31

For efficiency, we need to calculate the copper loss. The SC test is performed on secondary side at 10A. Now, the full-load secondary current can be calculated as,

$$(I_2)_{FL} = \frac{\text{kVA Rating} \times 1000}{E_2} = \frac{4 \times 1000}{400} = 10 \text{ A}$$

Thus, the short circuit test is carried out at full-load or rated load. So wattmeter reading gives full-load copper loss,

So, $[W_{cu}]_{FL} = 85$ W $= 0.085$ kW

From OC test, we know that wattmeter reading gives iron loss

So, $W_i = 70$ W $= 0.07$ kW

Now, efficiency at full load 0.8 pf lagging:

$$\%\eta = \frac{(x \times \text{full-load KVA} \times \text{pf})}{(x \times \text{full-load KVA} \times \text{pf}) + W_i + x^2[W_{Cu}]_{FL}} \times 100$$

At full load 0.8 pf, $x = 1$ and pf $= 0.8$

$$\text{So, } \%\eta = \frac{(1 \times 4 \times 0.8)}{(1 \times 4 \times 0.8) + 0.07 + (1)^2 \times 0.085} \times 100 = 95.38$$

Efficiency at half load 0.8 pf lagging

$$\%\eta = \frac{(x \times \text{full-load KVA} \times \text{pf})}{(x \times \text{full-load KVA} \times \text{pf}) + W_i + x^2[W_{Cu}]_{FL}} \times 100$$

Now, at half load, $x = 0.5$

$$\text{So, } \%\eta = \frac{(0.5 \times 4 \times 0.8)}{(0.5 \times 4 \times 0.8) + 0.07 + (0.5)^2 \times (0.085)} \times 100 = 94.65$$

Now, regulation at full load 0.8 pf lagging:

$$\%\text{ Regulation} = \frac{I_2\, Ro_2 \cos\phi + I_2 Xo_2 \sin\phi}{E_2} \times 100$$

$$\text{where } I_2 \text{ at full load, } (I_2)_{FL} = \frac{\text{kVA Rating} \times 1000}{E_2} = \frac{4 \times 1000}{400} = 10$$

Power factor, $\cos\phi = 0.8$ (given)

So, $\sin\phi = 0.6$

$$\%\text{ Regulation} = \frac{(10 \times 0.85 \times 0.8) + (10 \times 1.236 \times 0.6)}{400} \times 100 = 3.55$$

Regulation at half-load 0.8 pf lagging:

$$\%\text{ Regulation} = \frac{I_2\, Ro_2 \cos\phi + I_2 Xo_2 \sin\phi}{E_2} \times 100$$

where I_2 at half load, $(I_2)_{HL} = 0.5 \times (I_2)_{FL} = 0.5 \times 10 = 5$A

$$\text{So \% Regulation} = \frac{(5 \times 0.85 \times 0.8) + (5 \times 1.236 \times 0.6)}{400} \times 100 = 1.78$$

(b) Refer to Section 5.3.