13th Edition 2018

ENGINEERING MECHANICS

M.D.Dayal

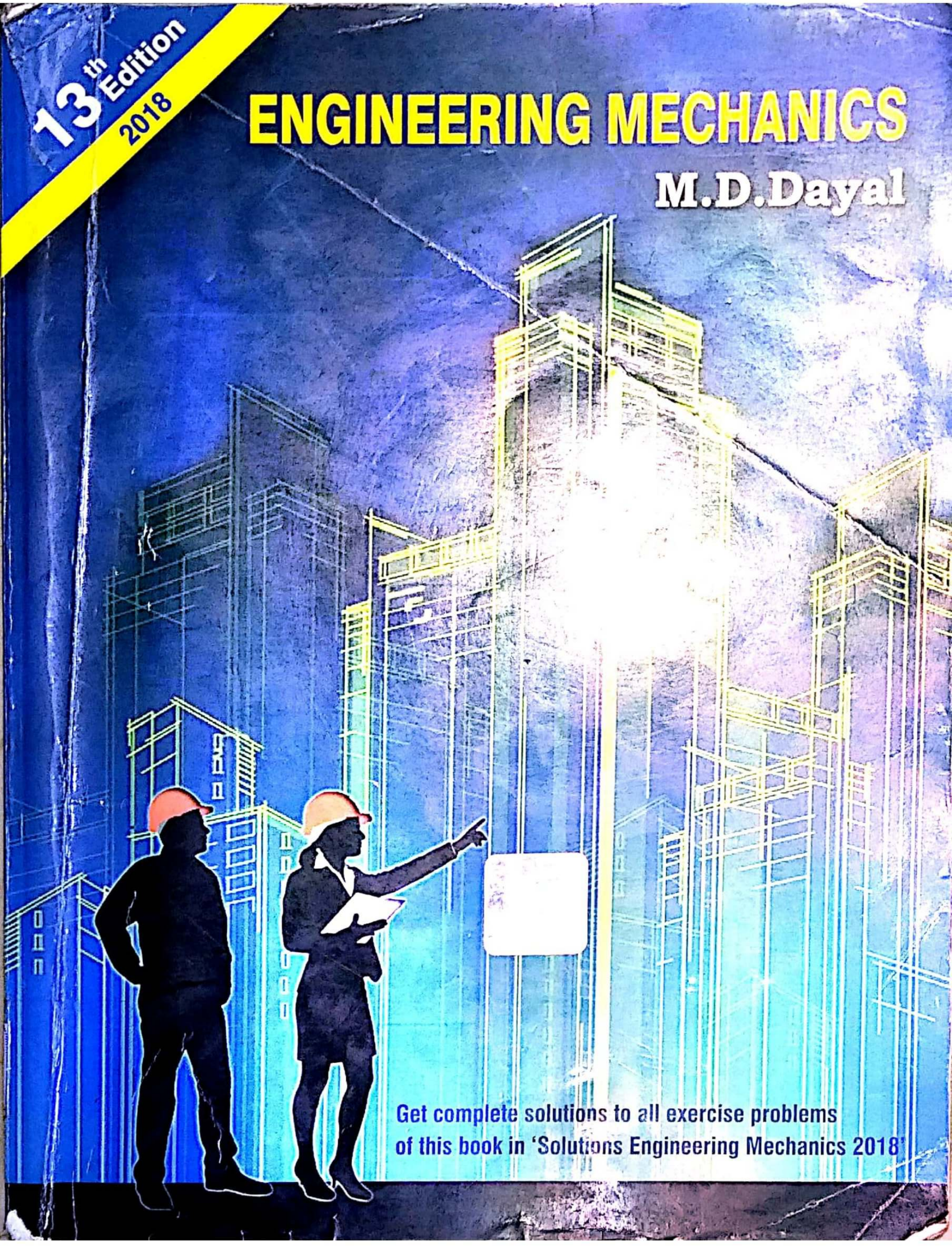

Get complete solutions to all exercise problems of this book in 'Solutions Engineering Mechanics 2018'

Contents

Chapter 1: Introduction **1**

1.1 What is Mechanics ? *1*
1.2 Historical Background *1*
1.3 Fundamental Concepts *2*
1.4 Fundamental Principles *3*
1.5 Idealisations in Mechanics *4*
1.6 The International System of Units *5*
1.7 Procedure of Problem Analysis *6*
Exercise 1.1 *6*

Chapter 2: Coplanar Forces- Resolution and Composition of Forces **7**

2.1 Introduction *7*
2.2 Force *7*
2.3 Resolution of a Force *8*
2.3.1 Resolution of Force into Rectangular Components *8*
2.4 System of Forces *10*
2.4.1 Coplanar System *10*
2.4.2 Non-coplanar system *11*
2.5 Principle of Transmissibility of Force *12*
2.6 Moment of a Force *12*
2.7 Varignon's Theorem *14*
2.8 Composition of Forces (Resultant of forces) *15*
2.9 Resultant of Concurrent System of Forces Using Parallelogram Law of Forces *15*
2.10 Resultant of Concurrent System of Forces Using Method of Resolution *17*
Exercise 2.1 *22*
2.11 Resultant of Parallel System of Forces *24*
2.12 Couple *24*
2.13 Properties of Couple *24*
Exercise 2.2 *28*
2.14 Resultant of General Force System *30*
Exercise 2.3 *37*
Exercise 2.4 *40*

Chapter 3: Coplanar Forces- Equilibrium 41

3.1 Introduction 41
3.2 Conditions of Equilibrium 41
3.3 Free Body Diagram (FBD) 41
3.4 Types of Supports and Reactions 42
3.5 Types of Loads 44
3.6 Equilibrium of Single Body 46
3.7 Equilibrium of a Two Force Body 51
3.8 Equilibrium of a Three Force Body 52
3.9 Lami's Theorem 52
3.10 Equilibriant Force 53
Exercise 3.1 54
3.11 Equilibrium of Connected Bodies 59
Exercise 3.2 67
Exercise 3.3 70

Chapter 4: Friction 71

4.1 Introduction 71
4.2 Frictional Force 71
4.3 Coefficient of Friction 72
4.4 Laws of Friction 72
4.5 Angle of Friction, Cone of Friction, and Angle of Repose 73
4.6 Problems on Blocks 74
Exercise 4.1 81
4.7 Wedges 85
Exercise 4.2 89
4.8 Problems on Ladders 90
Exercise 4.3 93
4.9 Tipping 95
Exercise 4.4 97
Exercise 4.5 98

Chapter 5: Truss 99

5.1 Introduction 99
5.2 Definition of Truss 99
5.3 Application of Truss 99
5.4 Analysis of Truss 100
5.5 Method of Joints 101
5.6 Special Cases 108
5.7 Statically Determinate and Statically Indeterminate Truss 109
Exercise 5.1 114
5.8 Method of Sections 117
Exercise 5.2 123
Exercise 5.3 128

Chapter 6: Centroid and Centre of Gravity 129

6.1 Introduction 129
6.2 Centroid and Centre of Gravity Defined 129
6.2.1 Centre of Gravity 129
6.2.2 Centroid 129
6.3 Relation for Centre of Gravity 129
6.3.1 Relation for Centroid 131
6.4 Axis of Symmetry (A.O.S) 131
6.5 Centroid of Regular Plane Areas 131
6.6 Centroid of Composite Area 133
6.7 Application of Centre of Gravity 134
Exercise 6.1 144
6.8 Centroid of Lines 147
6.8.1 Centroid of Regular Lines 147
Exercise 6.2 152
6.9 Centroid by Integration 153
Exercise 6.3 156
Exercise 6.4 156

Chapter 7: Space Forces 157

7.1 Introduction 157
7.2 Basic Operations Using Vector Approach 157
7.2.1 Force in vector form 157
7.2.2 Magnitude and direction of force 158
7.2.3 Vector Component of force 159
7.2.4 Moment of a force about a point 160
Exercise 7.1 161
7.3 Resultant of Concurrent Space Force System 162
7.4 Resultant of Parallel Space Force System 166
7.5 Resultant of General Space Force system 171
Exercise 7.2 176
7.6 Equilibrium of Space Forces 178
7.7 Supports for Space Structure 178
7.8 Equilibrium of Concurrent Space Force System 179
7.9 Equilibrium of Non-Concurrent Space Force System 183
Exercise 7.3 186
Exercise 7.4 188

Chapter 8: Virtual Work 189

8.1 Introduction 189
8.2 Work 189
8.3 Virtual Work 190
8.4 Principle of Virtual Work 190
8.5 Application of Virtual Work to Problems on Mechanism and Frames 191

Exercise 8.1 *200*

8.6 Application of Virtual Work to Problems on Beams with/without Internal Hinges *202*

Exercise 8.2 *208*

Exercise 8.3 *210*

Chapter 9: Introduction to Dynamics & Kinematics of Particles **211**

Part A: Introduction to Dynamics

9.1 Dynamics: Part of Rigid Body Mechanics *211*

9.2 Kinematics and Kinetics *212*

9.3 Particle Dynamics *213*

9.4 Rigid Body Dynamics *213*

9.5 Reference Frame *213*

Part B: Kinematics of Particles

9.6 Introduction *214*

9.7 Rectilinear Motion *214*

9.7.1 Position and Displacement *214*

9.7.2 Velocity *215*

9.7.3 Acceleration *216*

9.8 Different Rectilinear Motions *217*

9.8.1 Uniform Velocity Motion *217*

9.8.2 Uniform Acceleration Motion *217*

9.8.3 Motion Under Gravity (M.U.G) *220*

Exercise 9.1 *225*

9.8.4 Variable Acceleration Motion *227*

Exercise 9.2 *231*

9.9 Curvilinear Motion *234*

9.9.1 Curvilinear Motion – Rectangular System *235*

9.9.2 Curvilinear Motion – N – T System *236*

9.9.3 Relation between Rectangular and N – T Components of Acceleration *237*

Exercise 9.3 *242*

9.10 Projectile Motion *244*

9.10.1 Procedure to solve projectile problems *245*

Exercise 9.4 *254*

9.11 Graphical Analysis *258*

9.11.1 Standard Motion Curves *261*

Exercise 9.5 *267*

9.12 Relative Motion *269*

Exercise 9.6 *273*

9.13 Dependent Motion *274*

9.13.1 CSLM *274*

Exercise 9.7 *277*

Exercise 9.8 *278*

Chapter 10: Kinetics of Particles: Newton's Second Law **279**

10.1 Introduction *279*

10.2 Newton's Second Law of Motion *279*

10.3 D' Alembert's Principle *280*

10.4 N S L Equations Applied to Rectilinear Motion *281*

Exercise 10.1 *292*

10.5 N S L Equations Applied to Curvilinear Motion *296*

Exercise 10.2 *300*

Exercise 10.3 *300*

Chapter 11: Kinetics of Particles: Work Energy Method **301**

11.1 Introduction *301*

11.2 Work of a Force *301*

11.3 Work of a Spring Force *301*

11.4 Work of a Weight Force *302*

11.5 Work of a Friction Force *303*

11.6 Kinetic Energy *303*

11.7 Work Energy Principle *303*

11.8 Application of Work Energy Principle *304*

11.9 Power and Efficiency *305*

11.10 Energy *312*

11.11 Conservation of Energy *313*

Exercise 11.1 *315*

Exercise 11.2 *320*

Chapter 12: Kinetics of Particles: Impulse Momentum Method **321**

12.1 Introduction *321*

12.2 Impulse *321*

12.2.1 Impulsive Force *322*

12.3 Impulse Momentum Equation *322*

12.4 Application of Impulse Momentum Equation *323*

12.5 Conservation of Momentum Equation *327*

Exercise 12.1 *329*

12.6 Impact *331*

12.6.1 Line of Impact *331*

12.6.2 Types of Impact *331*

12.7 Direct Central Impact *332*

12.7.1 Coefficient of Restitution *333*

12.7.2 Procedure to Solve Direct Central Impact Problems *334*

12.7.3 Special Case of Direct Central Impact *335*

12.7.4 Relation between 'e' and Height of Bounce '*h*' *335*

12.8 Oblique Central Impact *338*

12.8.1 Procedure to Solve Oblique Central Impact Problem *338*

12.8.2 Special Case of Oblique Central Impact *339*

Exercise 12.2 *341*

12.9 Combination Problems *344*

Exercise 12.3 *352*

Exercise 12.4 *354*

Chapter 13: Kinematics of Rigid Bodies 355

13.1 Introduction *355*
13.2 Types of Rigid Body Motion *355*
13.3 Translation Motion *355*
13.3.1 Rectilinear Translation *355*
13.3.2 Curvilinear Translation *356*
13.4 Rotation about Fixed Axis *357*
13.4.1 Important Terms *357*
13.4.2 Types of Rotation Motion about Fixed Axis *358*
13.4.3 Relation between Linear velocity and Angular Velocity *359*
13.4.4 Relation between Linear Acceleration and Angular Acceleration *360*
13.4.5 Special case 1 of rotation motion: A block connected to a rotating pulley *360*
13.4.6 Special case 2 of rotation motion: A pulley coupled to another pulley and they rotate without slip *361*
Exercise 13.1 *364*
13.5 General Plane Motion *365*
13.5.1 Relative Velocity Method *366*
13.5.2 Instantaneous Centre Method *369*
13.6 Rotation about Fixed Point *370*
13.7 General Motion *370*
Exercise 13.2 *377*
Exercise 13.3 *382*

Chapter 14: Moment of Inertia 383

14.1 Introduction *383*
14.2 Application of Moment of Inertia of Plane Areas *383*
14.3 Theorems of Moment of Inertia *384*
14.3.1 Parallel Axis Theorem *384*
14.3.2 Perpendicular Axis Theorem *385*
14.4 Radius of Gyration *385*
14.5 Moment of Inertia from First Principle *386*
14.6 Moment of Inertia of Composite Figures *389*
Exercise 14.1 *399*
Exercise 14.2 *402*

Answers 403

Chapter 1

Introduction

1.1 What is Mechanics?

Mechanics may be defined as that branch of physical science which is concerned with the study of resultant effect of action of forces on bodies, both in the state of rest and in motion.

Mechanics is subdivided into three branches; Mechanics of Rigid Bodies, Mechanics of Deformable Bodies and Mechanics of Fluids.

In this book we shall study Mechanics of Rigid Bodies. In Rigid Body Mechanics bodies are assumed to be perfectly rigid i.e. there is no deformation of bodies under the action of loads to which they are subjected. Though the engineering structures and machines do deform under the action of loads, their deformation is so little that it does not affect the conditions of equilibrium or equations of motion which are applied in their study. Study of Mechanics of Rigid Bodies forms a basis for the study of other two branches i.e. Mechanics of Deformable Bodies and Mechanics of Fluids. It is therefore a basic subject in engineering study.

Mechanics of Rigid Bodies is further subdivided into Statics and Dynamics. Statics deals with bodies at rest. Study of forces on a building structure, bridges, transmission towers, etc falls under Statics. Dynamics on the other hand deals with bodies in motion e.g. a moving car, rotation motion of ship's propeller, rocket in motion, motion of a piston, etc.

1.2 Historical Background

The study of mechanics was developed very early in history. Early contributions were made by Aristotle (384 – 322 B.C) and Archimedes (287 – 212 B.C). In his writings, Aristotle dealt with the principle of lever which enables one to lift heavy objects with comparatively lesser force. At that age the requirements of engineering were mainly confined to construction work. It is therefore not surprising that the study of motion of bodies on inclined plane, lifting of loads by use of lever and pulleys have been recorded in ancient writings. On the other hand Archimedes established the phenomenon of Buoyancy.

It was Galileo Galilie (1564 – 1642) who introduced time factor in the study of the effect of forces on bodies. His experiments with motion of pendulum and falling bodies contributed to the wider and deeper study of the subject later on.

The major and most significant contribution to mechanics came from Sir Issac Newton (1642 – 1727) who propounded the theories of *Fundamental laws of motion* and the *Laws of universal gravitational acceleration.* During the same period Varignon (1654 – 1722) a French mathematician introduced what is now referred as Varignon's theorem. All this happened much before the introduction of vector algebra.

In 1687 Varignon and Newton presented the *Law of parallelogram of forces.* Further application and derivation of theorems based on these laws were made by D'Alembert (1717 – 1783), Euler (1736 – 1813), Lagrange and others.

Plank (1858 – 1943) and Bhor (1885 – 1962) made contributions in the area of Quantum Mechanics. In 1905, Einstein formulated his theory of relativity, referred to as *Relativistic Mechanics,* which challenged the Newton's law of motion. However it was found that Einstein's theory had certain limitations and therefore could not be applied under normal conditions. Newton's laws therefore form the base of study of mechanics and is therefore at times referred to as *Newtonian Mechanics.*

1.3 Fundamental Concepts

The study of mechanics has to start with knowing of fundamental concepts involving *length, time, mass* and *force.* In Newtonian Mechanics length, time and mass are the absolute concepts independent of each other.

1. *Length:*

The concept of length means the position occupied by a point in space with respect to a certain reference point like the origin. The three lengths in three different directions define the position of the point. It therefore describes the size of the system formed by number of points in space.

2. *Time:*

Whenever an event takes place, the time involved should also be known along with the position. Though time of an event is not necessary in statics, it is required in dynamics which deals with bodies in motion.

3. *Mass:*

It is the quantity of matter contained in a body. This quantity does not change on account of the position occupied by the body. This property is used to compare bodies e.g. two bodies having different mass would have different attractions to the earth or they would offer different resistance to the change in their velocities during motion.

4. *Force:*

A force is the action of one body on another body. The action could be a 'push' or a 'pull'. A force is exerted when there is an actual contact between the two bodies for e.g. a boy hitting a nail with a hammer. A force can also act even if there is no contact between the two bodies, such as the magnetic or gravitational force. Force is a vector quantity and is completely defined by its magnitude, its direction and point of application.

1.4 Fundamental Principles

The study of Mechanics of Rigid Bodies is based on the six fundamental principles presented below. These principles have their origin in experimental evidences. Various theorems used in mechanics have been derived from them.

1. *Newton's First Law of Motion*

Every body continues in its state of rest or of uniform motion in a straight line unless it is acted upon by an unbalanced force.

2. *Newton's Second Law of Motion*

The rate of change of momentum of a body is directly proportional to the impressed force and takes place in the direction of the force. It is mathematically written as

$$F = m\,a$$

where 'F' is the resultant force acting on a body of mass 'm' moving with acceleration 'a'.

3. *Newton's Third Law of Motion*

For every action there is an equal and opposite reaction.

4. *Newton's Law of Gravitational Attraction*

After formulating the three laws of motion, Newton put forth his law of gravitational attraction which states "*The force of attraction between any two bodies in the universe is directly proportional to the product of their masses and inversely proportional to the square of the distance between them*".

If M and n are the masses of two bodies separated by a distance r between them, they mutually attract each other with a force F, given by

$$F \propto \frac{M.n}{r^2} \qquad \text{or} \qquad F = G.\frac{M.n}{r^2}$$

where G is the Universal constant of gravitational attraction.

An important case of attraction is between a particle of mass m located at or near the surface of earth and the earth itself of mass M. If R is the radius of earth then the force of attraction defined as the weight of the particle would be

$$W = \frac{G.M.m}{R^2}$$

or $$W = m.g \quad \text{if} \quad g = \frac{G.M}{R^2}$$

The value of g varies with the altitude above the surface of earth and also with the latitude i.e location on earth, since the earth is not exactly spherical. For all practical computations $g = 9.81\ m/s^2$ can be used.

5. *The principle of transmissibility of Force-*

It states "*A force being a sliding vector, continues to act along its line of action and therefore makes no change if it acts from a different point on its line of action on a rigid body*". This principle has been illustrated in detail with figures in article 2.5

6. *Law of parallelogram of forces.*

It states " *If two forces acting simultaneously on a body at a point are represented in magnitude and direction by the two adjacent sides of a parallelogram then their resultant is represented in magnitude and direction by the diagonal of the parallelogram which passes through the point of intersection of the two sides representing the forces*". This law has been further discussed in article 2.9

1.5 Idealisations in Mechanics

In order to simplify the applications of theories in mechanics some assumptions or idealisations are made which result in simplified solutions. These are discussed below.

Particle – A particle is a body whose shape and size is neglected because those being negligible and insignificant as compared to other dimensions and lengths involved in the analysis of the body. For example, in the motion analysis of a vehicle on a highway between two stations kilometers apart, the shape and size of the vehicle become insignificant and therefore the vehicle can be idealised as a particle

Rigid Body – A rigid body is a body whose shape and size is taken into consideration during its analysis. Such a body is said to be made up of number of particles which remain at fixed distances from each other. On application of the loads or during motion the shape and size of the body does not change. For example, the pillar supports of a building structure do deform under the action

of the loads they carry, but the deformations are very small as compared to the lengths of the pillars and therefore the pillar can be idealised as a rigid body.

Point Load (Concentrated Force) – Point load or Concentrated force is an idealisation that a force acts at a point on the body though in fact it must be acting over a certain area. This idealisation could be satisfactorily used when the area on which the force acts is small, for example, the normal reaction force which the tyres of the wheels receive from the ground can be idealised to act at a point though actually it acts over a certain area. This idealisation would hold true since the area of contact is very small as compared to the size of the wheel.

1.6 The International System of Units

Of the four fundamental concepts i.e length, time, mass and force, three of them length, time and mass have fundamental units. The fourth concept i.e. force has a derived unit which is based on the three fundamental units. Fundamental units also known as the basic units are arbitrarily defined and are independent of each other. In this book SI units have been extensively used. The SI unit of length is metre (m), of mass is kilogram (kg), of time is seconds (s). Derived units depend on the fundamental units. The SI unit of force is Newton (N). $1\ N = 1\ kg\ m/s^2$.

The SI units used in mechanics are listed below.

Quantity	SI Unit	Formula	Symbol
Length	Metre	Basic Unit	m
Mass	Kilogram	Basic Unit	kg
Time	Second	Basic Unit	s
Acceleration	Metre per second square	m/s^2	-
Angle	Radian	-	rad
Angular Acceleration	Radian per second square	rad/s^2	-
Angular Velocity	Radian per second	rad/s	-
Area	Square metre	m^2	-
Couple	Newton-metre	N.m	-
Density	Kilogram per cubic metre	kg/m^3	-
Energy	Joule	N.m	J
Force	Newton	$kg.m/s^2$	N
Frequency	Hertz	s^{-1}	Hz
Impulse	Newton-second	kg.m/s	-
Moment of force	Newton-metre	N.m	-
Power	Watt	J/s	W
Pressure	Pascal	N/m^2	Pa
Stress	Pascal	N/m^2	Pa
Velocity	Meter per second	m/s	-
Volume of solids	Cubic metre	m^3	-
Volume of liquids	Litre	$10^{-3}\ m^3$	L
Work	Joule	N.m	J

1.7 Procedure of Problem Analysis

Solving problems is the best way of learning the subject of mechanics. While solving the problems follow the guidelines listed below. This should help in successful solution of the problem.

1. After reading the problem carefully, the student should try to relate the data of the problem to an actual physical engineering situation.
2. Even if the problem figure is given, draw your own necessary figure and superimpose the problem data on it. The figure should be neat and clear. It should show the various forces acting on the body. Such figures are known as *free body diagrams* and these play a very vital role in problem solution.
3. Apply the relevant fundamental principles and express the requirement in mathematical equations. Break the working in suitable steps and record them in an orderly manner. Check the equations dimensionally and use a consistent set of units throughout. There may be more than one equation which would require proper mathematical solution.
4. Try to reason the answer, or cross check the same by solving the same problem by any other alternate method if possible, to check the correctness of solution. Record the answers at the end of the solution.

Exercise 1.1

Q.1 What is Mechanics ?

Q.2 State in brief the historical background of the development of the study of mechanics.

Q.3 Explain the fundamental concepts of Length, Time and Mass.

Q.4 State and explain Newton's Law of Gravitational Attraction. ***(VJTI Dec 11)***

Q.5 Explain "Idealisation in Mechanics".

★ ★ ★

Chapter 2

Coplanar Forces: Resolution and Composition of Forces

2.1 Introduction

In this chapter we will define the most basic concept in mechanics, the 'Force' and know its various characteristics and effects. We shall further learn to 'break', technically known as 'resolution' of a force and to 'combine' technically known as 'composition' of forces. We shall be studying the different 'systems of forces' and finally we shall learn about 'couples' and their properties.

2.2 Force

Force is defined as an agency which changes or tends to change the state of rest or of uniform motion of a body. For example a man trying to push a cupboard as shown in figure 2.1(a) exerts a force 'F'. If the force is sufficient to cause motion, the cupboard will slide to the right and if not sufficient, the force F only 'tends' to change the state of rest but not succeeding to cause motion.

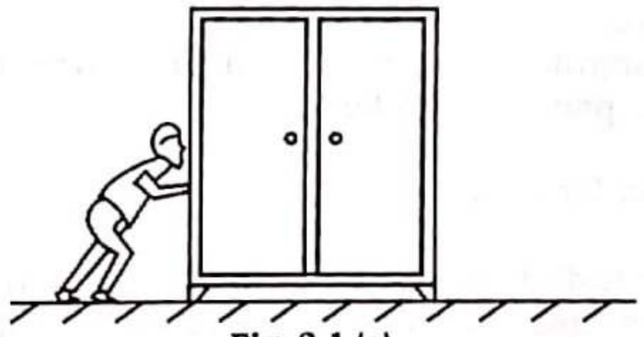

Fig. 2.1 (a)

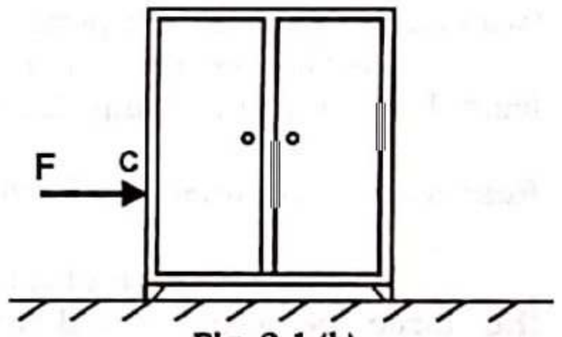

Fig. 2.1 (b)

Similarly Fig. 2.2 shows an arrangement to bring a rotating wheel to a stop by applying force P to press the brakes.

Force is a vector quantity.
It is characterised by
i) magnitude
ii) direction
iii) sense
iv) location (point of application)

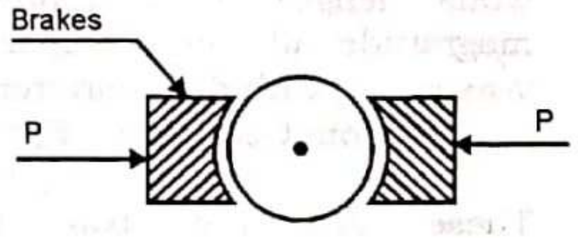

Fig. 2.2

For the person pushing the cupboard, refer Fig. 2.1 (a) and 2.1 (b) the man applies a force of magnitude F, whose direction is horizontal, sense is to the right and point of application is at C.

The S.I. unit of force is Newton (N) or its multiples i.e. kilo-Newton (kN), where 1 kN = 1000 N

The unit of force has been named after Sir Issac Newton and one Newton force is defined as a force required to produce an acceleration of 1 m/s² in a body of mass 1 kg.

2.3 Resolution of a Force

Resolution or resolving a force implies breaking the force into components, such that the components combined together would have the same effect as the original force. Fig. 2.3 (a) shows a force F acting at an angle 'θ'. This force can be resolved into components F_1 and F_2 as shown in Fig. 2.3 (b) or into components F_x and F_y as shown in Fig. 2.3 (c).

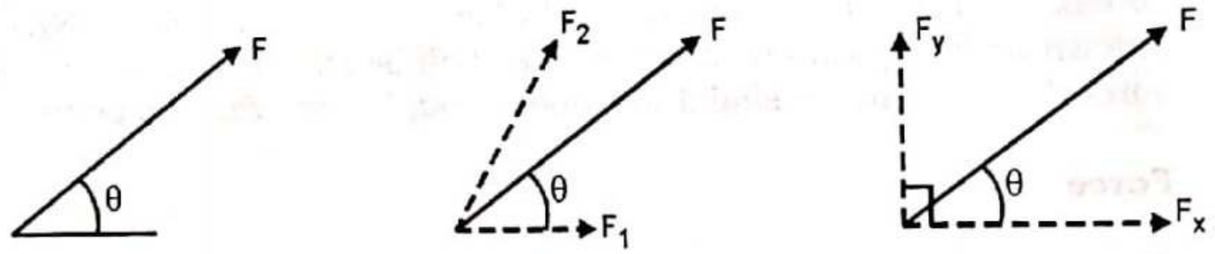

Force F — Fig. 2.3 (a)

Force F resolved into components F_1 and F_2 — Fig. 2.3 (b)

Force F resolved into components F_x and F_y — Fig. 2.3 (c)

The components F_x and F_y of the force F as shown in Fig. 2.3 (c) are known as the *rectangular* or *perpendicular* components of the force, since the two components are perpendicular to each other.

Usually we require rectangular components of force and hence let us learn how to find rectangular components of a force.

2.3.1. *Resolution of a Force into Rectangular Components*

Consider a force of magnitude F acting at an angle θ with the x-axis. Let the force be represented by a line OA drawn to scale. From A drop a perpendicular on the x-axis at E and on the y-axis at P.

Length (OE) represents the magnitude of the component along x-axis (F_x) with direction from O to E, while length (OP) represents the magnitude of the component along y-axis (F_y) with direction from O to P.

From Geometry $F_x = F\cos\theta \rightarrow$

$F_y = F\sin\theta \uparrow$

These are the two rectangular components of force F.

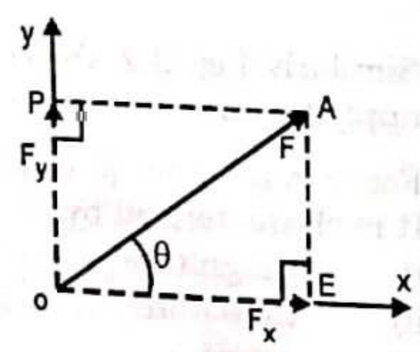

Fig. 2.4

Ex. 2.1 Resolve the force P = 60 N into horizontal and vertical components.

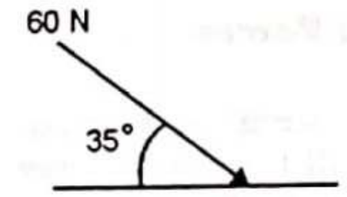

Solution:

$F_x = 60\cos 35 = 49.15$ N →

$F_y = 60\sin 35 = 34.41$ N↓

... **Ans.**

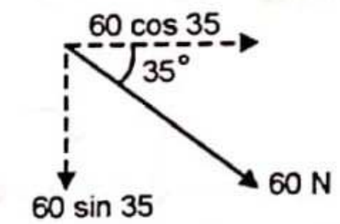

Ex. 2.2 A 5 kN force acts on one end of a rod as shown. Resolve the force along x and y direction.

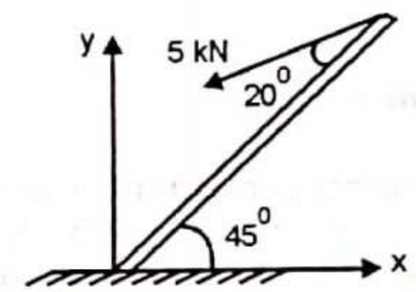

Solution: Total angle made by 5 kN force with the vertical is 65°

∴ $F_x = 5\sin 65 = 4.53$ kN ←

$F_y = 5\cos 65 = 2.11$ kN ↓

... **Ans.**

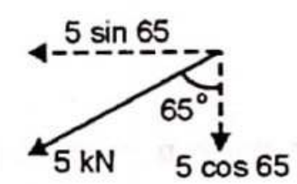

Ex. 2.3 A block of 200 kN weight is kept on a plane inclined at 30° with the horizontal. Find the components along and normal to the plane.

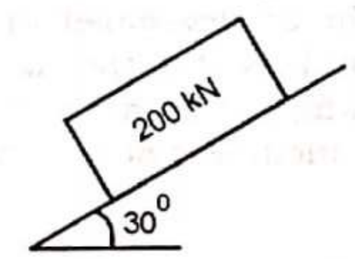

Solution :

The weight of the block shall act vertically down as shown. Let us choose the x-axis along the plane and y-axis normal to the plane.

Resolving we get

$F_x = 200\sin 30 = 100$ N

$F_y = 200\cos 30 = 173.2$ N

... **Ans.**

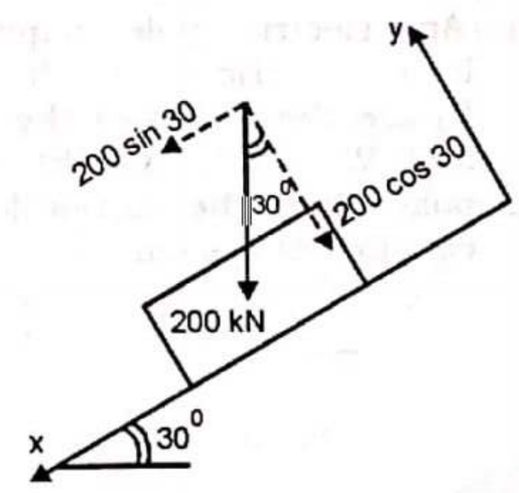

2.4 System of Forces

'System of Forces' tells us about how the forces are arranged. For example all the forces may lie on one plane or may lie on different planes. They may meet at a point, may be parallel to each other or may just neither be parallel, nor may meet at a point. 'System' defines this arrangement of forces and is classified as shown.

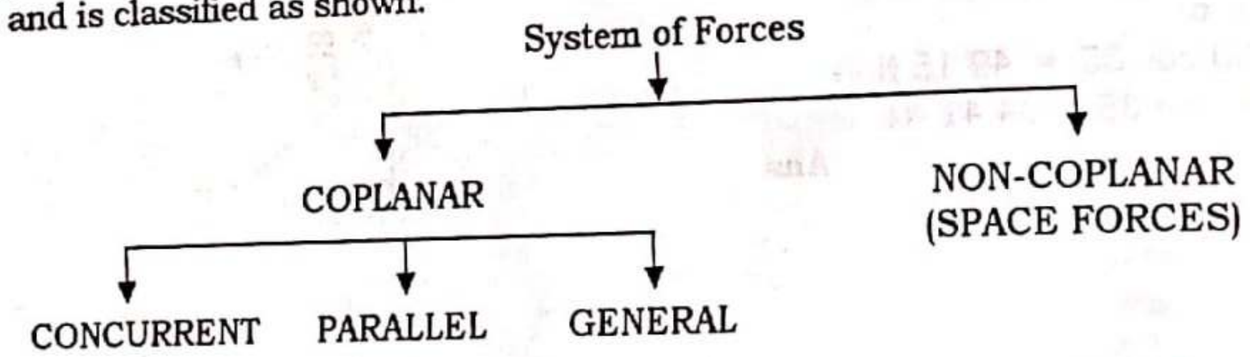

2.4.1 *Coplanar system*

In this arrangement all the forces lie in one plane. Fig. 2.5 shows a coplanar system consisting of four forces F_1, F_2, F_3 and F_4 all lying in the 'xoy' plane.

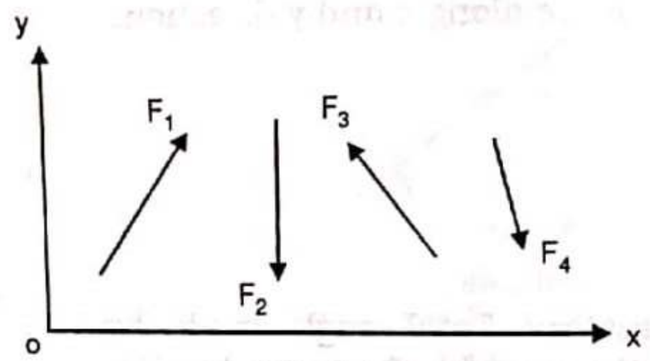

Fig. 2.5

A coplanar system is further sub-divided into

a) *Concurrent system* : In this system all the forces meet at a point. Examples of concurrent system are,

i) A lamp hanging from two strings. If T_1 and T_2 are the forces developed in the strings and W be the weight of the lamp, then we have a concurrent system at a point A

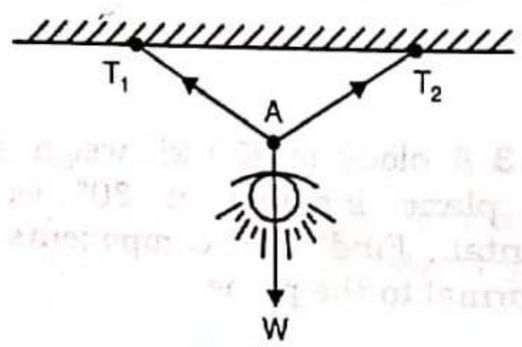

Fig. 2.6 (a)

ii) An electric pole supporting heavy electric cables. If F_1, F_2, F_3 are the forces in the cable, and W be the weight of the pole, then the forces form a concurrent system.

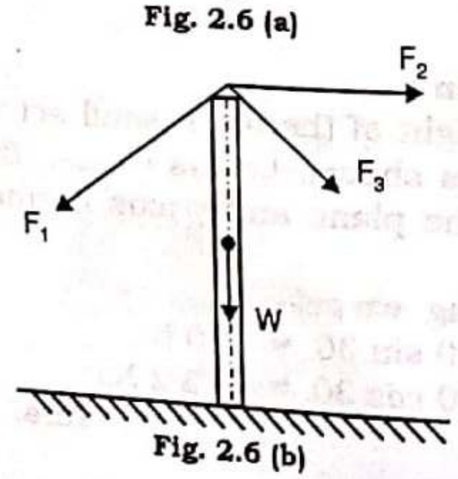

Fig. 2.6 (b)

b) *Parallel system* : In this system the lines of action of the forces are parallel.

For example;

i) A vegetable vendor weighing the vegetables, the weight W_1 of vegetables, the measured weight W_2, the force F applied by hand to hold the weighing scale, all three forces form a parallel system.
Refer Fig. 2.7 (a).

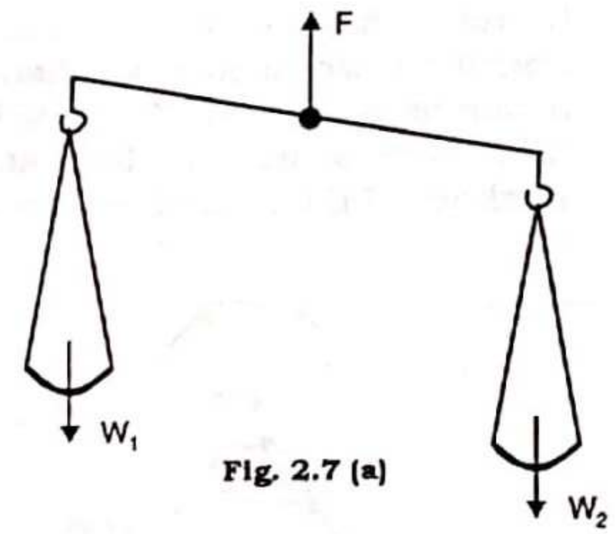

Fig. 2.7 (a)

ii) Persons sitting on a bench. Fig. 2.7 (b) shows three persons of weights P_1, P_2 and P_3 sitting on a bench of self weight W. If R_1 and R_2 are the reactions offered by the ground then the six forces form a parallel system.

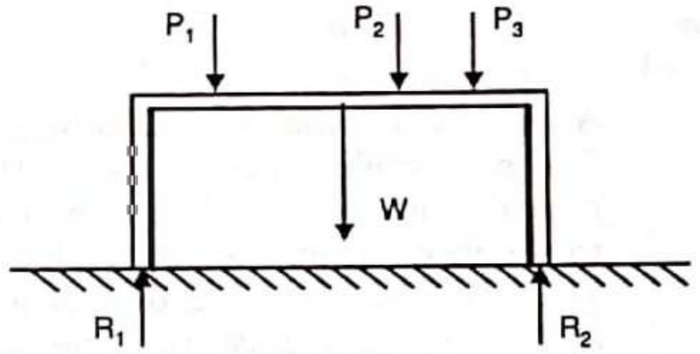

Fig. 2.7 (b)

c) *General system* : Also known as a 'non-concurrent and non-parallel' system has forces which do not meet at a single point, nor are parallel to each other. For example the forces acting on the rectangular plate form a general system.
Refer Fig. 2.8.

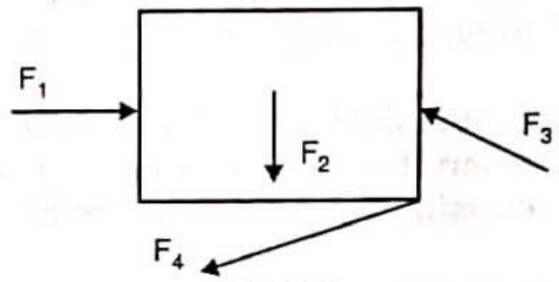

Fig. 2.8

2.4.2 *Non-coplanar System*

When the forces acting in a system do not lie in a single plane, they are termed as Non-coplanar forces or Space forces. Refer Fig. 2.9.

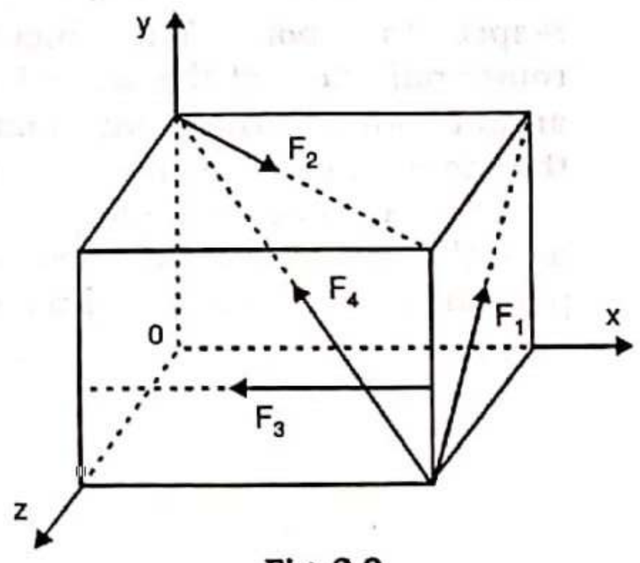

Fig. 2.9

2.5 Principle of Transmissibility of Force

It states "A force being a sliding vector continues to act along its line of action and therefore makes no change if it acts from a different point on its line of action on a rigid body". Consider a rigid body as shown in Fig. 2.10, acted upon by a force of magnitude F acting at A. The effect on the body would remain unchanged if it acted from point B, C or any other point on its line of action.

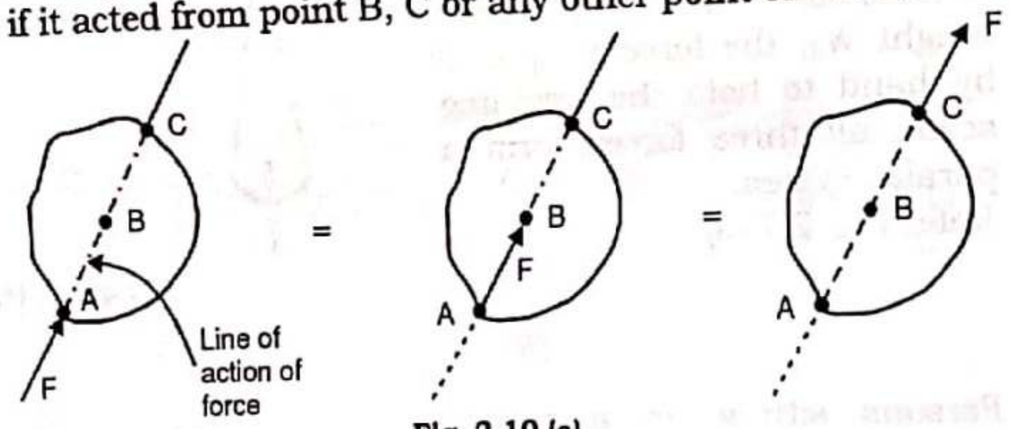

Fig. 2.10 (a)

A practical example explaining Principle of Transmissibility (Refer fig. 2.10 (b)) is the case of a locomotive 'L' pulling the wagons 'W' to the right by exerting force F from the front. This force gets transmitted to all the wagons and they move forward. The same effect is observed if the locomotive pushes the wagons from behind. Again the force F is transmitted to all the wagons and they move forward.

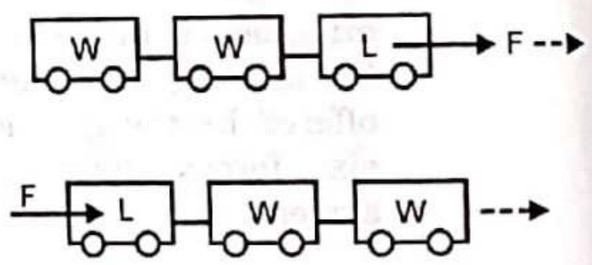

Fig 2.10 (b)

Transmissibility of force introduces the concept of the force as a *Sliding Vector* when it act on rigid body. The force can be shown anywhere on its line of action, causing no change in the force system.

2.6 Moment of a Force

We all are aware that a force can cause a body to slide, but at the same time it can cause a body to rotate also. *The rotational effect of a force is known as the moment of the force.* When we talk of the rotational effect, it has to be with respect to a point. The concerned point is known as the *moment centre.* The rotational effect of the same force will vary from one moment center to another and of course if the point (moment centre) lies on the line of action of the force, the moment of force about the point would be zero.

The rotational effect or moment is measured as the product of the force and the perpendicular distance from the moment centre to the force. This perpendicular distance is known as the *moment arm* 'd'.

$$\therefore \quad \mathbf{M = F \times d} \qquad \text{..... 2.1}$$

The tendency to rotate could be either clockwise or anti-clockwise.

Fig. 2.11 shows a force of magnitude F acting on a rectangular plate ABCD as shown.

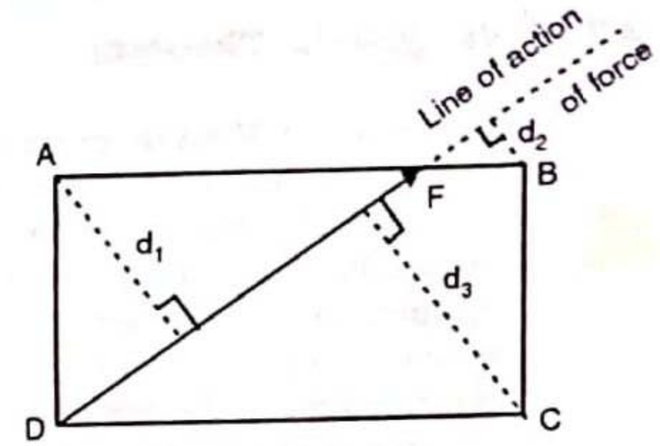

Fig. 2.11

The moment of F

about A = $F \times d_1$ (anti-clockwise) $= +(F \times d_1)$

about B = $F \times d_2$ (clockwise) $= -(F \times d_2)$

about C = $F \times d_3$ (clockwise) $= -(F \times d_3)$

about D = 0

Units of moment are N-m or N-mm or kN-m

Sign convention: we shall take anti-clockwise moments as positive moments, and clockwise moments as negative. This shall be indicated as ↺ + ve

Ex. 2.4 Find moments of forces P_1, P_2, P_3 and P_4 about A.

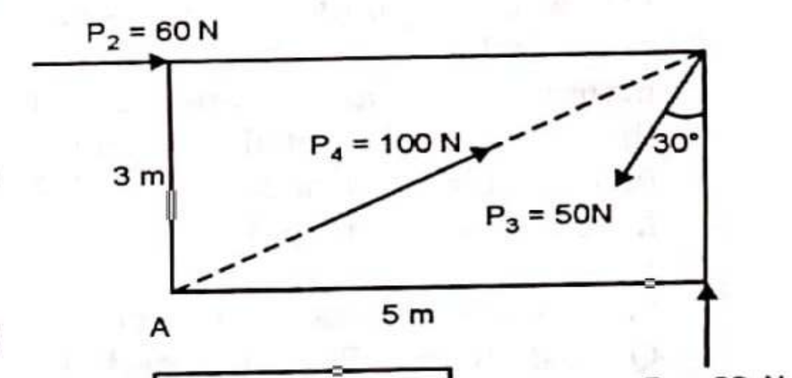

Solution: Taking anticlockwise moments as positive (↺ + ve)

a) $M_A^{P_1} = +(20 \times 5) = 100$ Nm ..... **Ans.**

(Moment is + ve because rotation of 20 N @ A is anticlockwise)

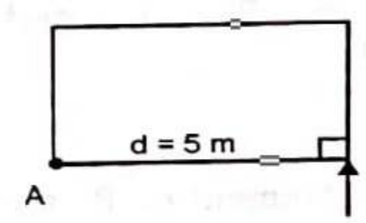

b) $M_A^{P_2} = -(60 \times 3) = -180$ Nm ..... **Ans.**

(Moment is – ve because rotation of 60 N @ A is clockwise)

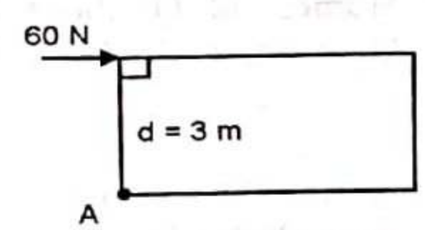

c) $M_A^{P_3} = +(50 \sin 30 \times 3) - (50 \cos 30 \times 5)$

$= -141.5$ Nm ..... **Ans.**

(Inclined force P_3 is resolved into components 50 cos 30 and 50 sin 30 since taking moments of the components is easier.)

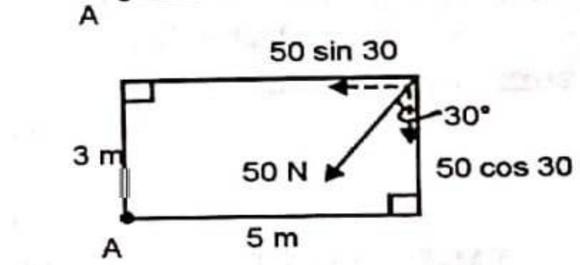

d) $M_A^{P_4} = 0$ ..... **Ans.**

(Moment is zero since force P_4 passes through A)

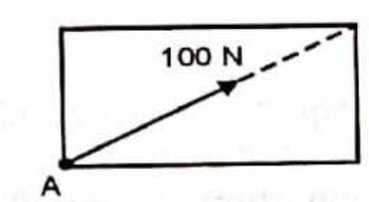

2.7 Varignon's Theorem

Varignon, a French mathematician (1654 – 1722) established that the sum of the moments of a concurrent system of forces about any point is equal to the moment of the resultant of the concurrent system about the same point. Though originally derived for a concurrent system of forces, this theorem can in fact be applied to any system of forces and is thus stated as *"the algebraic sum of the moments of a system of coplanar forces about any point in the plane is equal to the moment of the resultant force of the system about the same point"*.

Mathematically it is written as

$$\boxed{\Sigma M_A^F = M_A^R} \qquad \text{..... 2.2}$$

Sum of moments of all forces about any point, say point A. = Moment of the resultant about the same point A.

Proof – Let P and Q be two concurrent forces at O, making angle θ_1 and θ_2 with the x-axis, let R be their resultant making an angle θ with x-axis.

Let A be a point on the y-axis about which we shall find the moments of P and Q and also of the resultant R. Let d_1, d_2 and d be the moment arm of P, Q and R from moment centre A.

Let the x component of forces P, Q and R be P_x, Q_x and R_x respectively

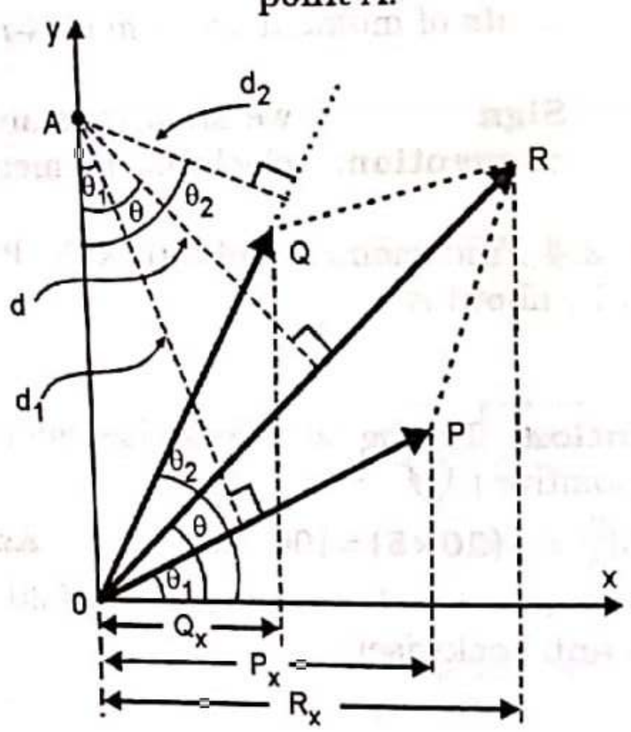

Fig. 2.12

Now,

Moment of P about A = $M_A^P = P \times d_1$ --------(1)

Moment of Q about A = $M_A^Q = Q \times d_2$ --------(2)

Moment of R about A = $M_A^R = R \times d$

$= R\,(OA \cos\theta)$

$= OA\,(R_x)$ --------(3)

Adding equations (1) and (2) we have

$M_A^P + M_A^Q = P\,d_1 + Q\,d_2$

or sum of moments $\Sigma M_A^F = +(P \times OA \cos\theta_1) + (Q \times OA \cos\theta_2)$

$= OA.\,P_x + OA.Q_x$ since $P_x = P\cos\theta_1$ and $Q_x = Q\cos\theta_2$

$= OA\,(P_x + Q_x)$

$\therefore \quad \Sigma M_A^F = OA\,(R_x)$ --------(4)

$P_x + Q_x = R_x$ since the resultant of forces in the 'x' direction is the sum of components of forces in the 'x' direction

Comparing equation (4) with (3)

$\Sigma M_A^F = M_A^R$ ----- Proved

The above equation can similarly be extended for more than two forces in the system.

2.8 Composition of Forces (Resultant of forces)

Composition means to combine the forces acting in a system into a single force, which has the same effect as the number of forces acting together. Such a single force is known as *resultant of the system*. Finding the 'resultant' helps to analyse the effect of the forces on the system and may form an important step in the solution of engineering problems. We shall learn to find the resultant of

(a) Concurrent system of two forces using law of parallelogram of forces.
(b) Concurrent system of more than two forces using method of resolution.
(c) Parallel system of forces.
(d) General system of forces.

2.8.1 Types of Resultant

Resultant of a force system may either be a (i) a force or (ii) a couple or (iii) a force couple. Let us understand the three possibilities of a resultant in detail.

1. Resultant- Force

   In a given force system consisting of number of forces, if on composition of these forces it results in a single force, we call such a resultant as 'Resultant–Force'. Refer Fig. a

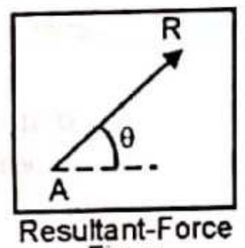

Resultant-Force
Fig. a

2. Resultant- Couple

   In a force system if the resultant force is zero but the resultant moment is not zero, such a system reduces into a couple. Fig. b shows the 'couple' resultant.

   Resultant-Couple is possible in a Parallel system or a General force system, but a concurrent force system does not result in a couple. We shall learn in detail about 'couple' later in this chapter.

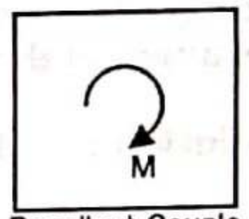

Resultant-Couple
Fig. b

3. Resultant-Force Couple

   A resultant force when shifted to a new parallel position without change in its direction and sense, introduces a couple in the system. Such a resultant consisting of a single force and a single couple is called as 'Force Couple'. Fig. c shows a force couple resultant. We shall learn about shifting of a force by introducing of a couple later in this chapter.

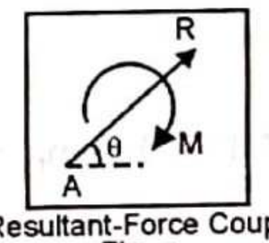

Resultant-Force Couple
Fig. c

2.9 Resultant of Concurrent System of Forces using Parallelogram Law of Forces

Parallelogram law of forces states "If two forces acting simultaneously on a body at a point are represented in magnitude and direction by the two adjacent sides of a parallelogram, then their resultant is represented in magnitude and direction by the diagonal of the parallelogram which passes through the point of intersection of the two sides representing the forces".

Let P and Q be the two forces acting at a point and making an angle 'α' with each other as shown in Fig.2.13 (a). The forces are drawn to scale in figure such that AB and AD represent forces P & Q. Completing the parallelogram ABCD, the diagonal AC gives the magnitude and direction of the resultant R. Refer Fig. 2.13 (b).

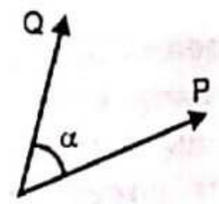

Fig. 2.13 (a)

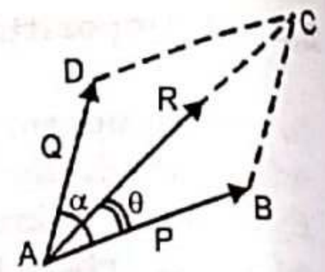

Fig. 2.13 (b)

Mathematically $$R = \sqrt{P^2 + Q^2 + 2PQ\cos\alpha} \quad \text{..... 2.3 (a)}$$

$$\boxed{\tan\theta = \frac{Q\sin\alpha}{P + Q\cos\alpha}} \quad \text{..... 2.3 (b)}$$

Where θ is the angle made by resultant R with the force P

Though parallelogram law is for two forces, it can be used for more forces also, but would require repeated use, taking two forces at a time.

Ex. 2.5 Two forces of 120 N and 80 N act on an eye-bolt at A as shown. Determine the resultant of the two forces.

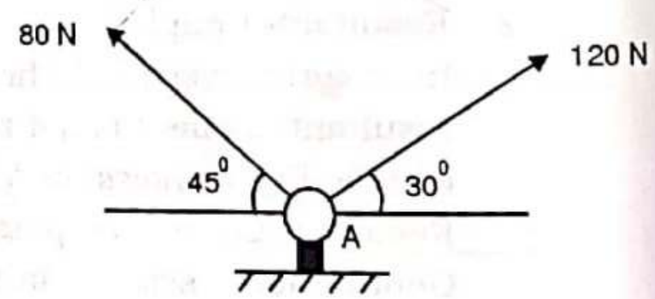

Solution : Using parallelogram law of forces,

Let P = 120 N, Q = 80 N

Angle between P and Q = α = 180 – 45 – 30 = 105°

$$R = \sqrt{P^2 + Q^2 + 2PQ\cos\alpha}$$

$$= \sqrt{120^2 + 80^2 + 2\times120\times80\times\cos105}$$

$$= 125.8 \text{ N} \quad \text{..... Ans.}$$

If 'θ' is the angle made by the resultant R with the force P then

$$\tan\theta = \frac{Q\sin\alpha}{P + Q\cos\alpha}$$

$$= \frac{80\sin105}{120 + 80\cos105}$$

$$= 0.778$$

or $\theta = 37.89°$ (w.r.t. 120 N force)... **Ans.**

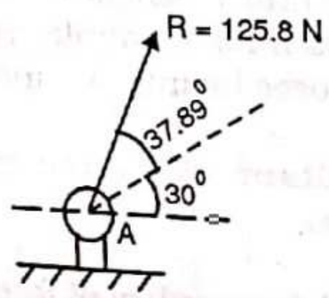

2.10 Resultant of Concurrent System of Forces Using Method of Resolution

When more than two forces act at a point, the use of method of resolution is made to avoid tedious repetition of parallelogram law of forces to successive forces. The following steps are adopted in the solution.

Step 1: Resolve the inclined forces if any along the horizontal x direction and the vertical y direction.

Step 2: a) Add up the horizontal forces to get ΣF_x. Use sign Convention → + ve

b) Add up the vertical forces to get ΣF_y. Use sign convention ↑ + ve .

c) The resultant force $R = \sqrt{\Sigma F_x^2 + \Sigma F_y^2}$

Step 3: The direction of the resultant force is the angle θ made by it with the x axis. To find angle θ, use

$$\tan\theta = \frac{\Sigma F_y}{\Sigma F_x}$$

Note: while using the above relation take positive values of ΣF_y and ΣF_x. The value of θ so obtained will always be less than 90°

Step 4: Decide the quadrant of the resultant, depending on the signs of ΣF_x and ΣF_y

Step 5: Draw a diagram showing the resultant.

If	Resultant lies in
ΣF_x is + ve and ΣF_y is + ve	1 st Quadrant
ΣF_x is – ve and ΣF_y is + ve	2 nd Quadrant
ΣF_x is – ve and ΣF_y is – ve	3 rd Quadrant
ΣF_x is + ve and ΣF_y is – ve	4 th Quadrant

Ex. 2.6 Find the resultant of the four concurrent forces acting on a particle P.

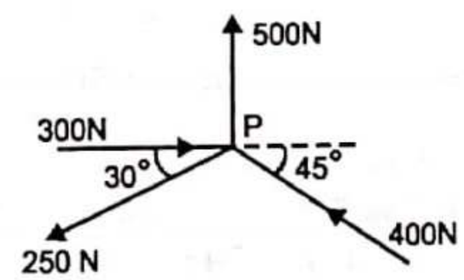

Solution: This is a concurrent system of forces.

$\Sigma F_x \rightarrow$ + ve

= 300 – 250 cos 30 – 400 cos 45

= – 199.3 N

= 199.3 N ←

ΣF_y ↑ + ve

= 500 – 250 sin 30 + 400 sin 45

= 657.8 N ↑

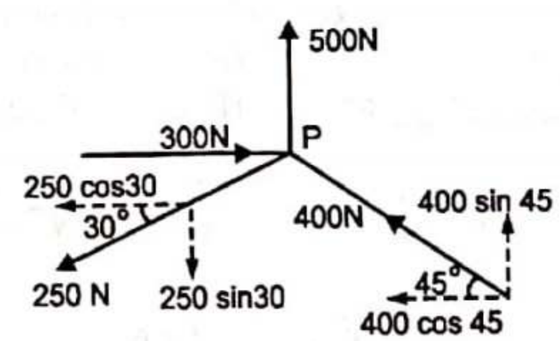

Using $$R = \sqrt{(\Sigma F_x)^2 + (\Sigma F_y)^2}$$

$$= \sqrt{199.3^2 + 657.8^2}$$

∴ R = 687.4 N ... Magnitude of resultant force

also $\tan\theta = \dfrac{\Sigma F_y}{\Sigma F_x} = \dfrac{657.8}{199.3}$

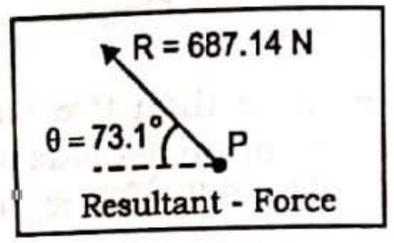

$\therefore$ $\theta = 73.1°$ ... Direction of resultant force

The arrows of ΣF_x and ΣF_y indicates that the resultant R lies in the 2nd quadrant ↖

... Sense of resultant force

$\therefore$ Resultant force R = 687.4 N at $\theta = 73.1°$ ↖ acts at particle P as shown. ... **Ans.**

Ex. 2.7 R = 800 N is the resultant of 4 concurrent forces. Find the fourth force F_4

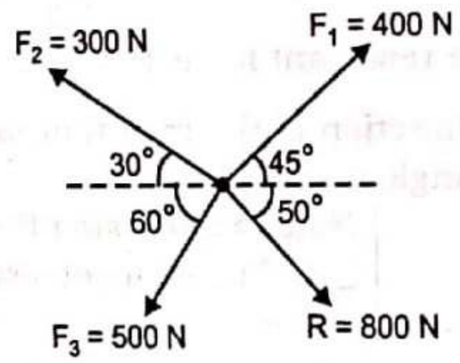

Solution: This is a concurrent system of four forces.

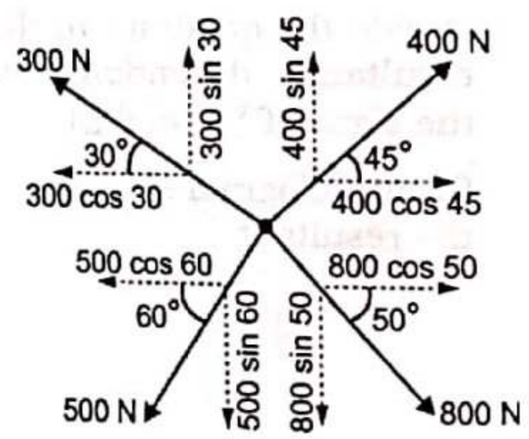

Let $(F_4)_x$ and $(F_4)_y$ be the perpendicular components of the fourth force

Since it is given R = 800 N at $\theta = 50°$ ↘

$\therefore$ $\Sigma F_x = 800 \cos 50 \rightarrow$

and $\Sigma F_y = 800 \sin 50 \downarrow$

ΣF_x $\rightarrow$ + ve

$800 \cos 50 = 400 \cos 45 - 300 \cos 30 - 500 \cos 60 + (F_4)_x$

$\therefore$ $(F_4)_x = 741.2$ N $\rightarrow$

ΣF_y $\uparrow$ + ve

$-800 \sin 50 = 400 \sin 45 + 300 \sin 30 - 500 \sin 60 + (F_4)_y$

$\therefore$ $(F_4)_y = -612.6$ N

or $(F_4)_y = 612.6$ N $\downarrow$

Now $F_4 = \sqrt{(F_4)_x^2 + (F_4)_y^2} = \sqrt{741.2^2 + 612.6^2} = 961.6$ N ... Magnitude of F_4

also $\tan\theta = \dfrac{(F_4)_y}{(F_4)_x} = \dfrac{612.6}{741.2}$ $\therefore$ $\theta = 39.6°$

... Direction of F_4

The arrows of $(F_4)_x$ and $(F_4)_y$ indicates that the force F_4 lies in the 4th quadrant ↘

... Sense of F_4

$\therefore$ The fourth force $F_4 = 961.6$ N at $\theta = 39.6°$ ↘

.....**Ans.**

Ex. 2.8 Find the resultant of the force system. ***(MU Dec 12, NMIMS Dec 13)***

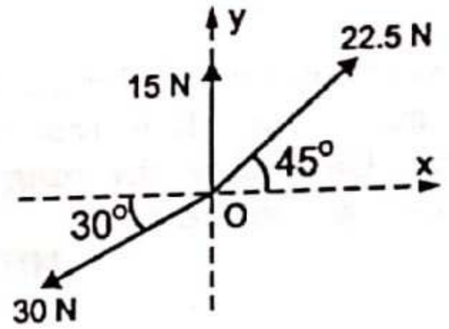

Solution: This is a system of three concurrent forces.

Using Method of Resolution

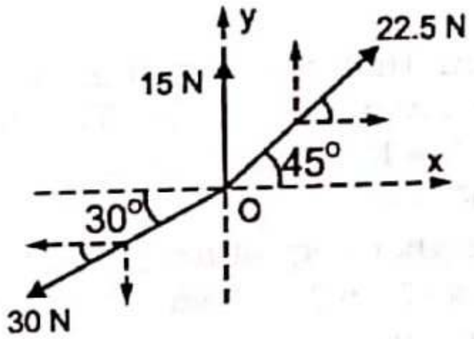

ΣF_x $\rightarrow$ + ve

$= 22.5 \cos 45 - 30 \cos 30$

$= -10.07$ N

$\therefore$ $\Sigma F_x = 10.07$ N $\leftarrow$

ΣF_y $\uparrow$ + ve

$= 15 + 22.5 \sin 45 - 30 \sin 30$

$= 15.91$ N

$\therefore$ $\Sigma F_y = 15.91$ N $\uparrow$

Using $R = \sqrt{\Sigma F_x^2 + \Sigma F_y^2} = \sqrt{10.07^2 + 15.91^2}$

$= 18.829$ N ... Magnitude of resultant force

Also $\tan\theta = \dfrac{\Sigma F_y}{\Sigma F_x} = \dfrac{15.91}{10.07}$ $\therefore$ $\theta = 57.67°$ ... Direction of resultant force

The arrows of ΣF_x and ΣF_y indicates that the resultant force lies in the 2nd quadrant ↖

... Sense of resultant force

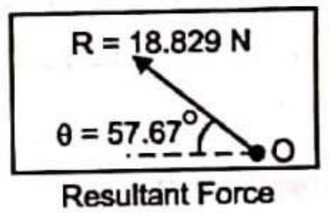

$\therefore$ Resultant is a force R = 18.829 N at $\theta = 57.67°$ ↖ acts at a point O as shown ... **Ans.**

Ex. 2.9 Two concurrent forces P and Q acts at O such that their resultant acts along x-axis. Determine the magnitude of Q and hence the resultant. ***(MU May 14)***

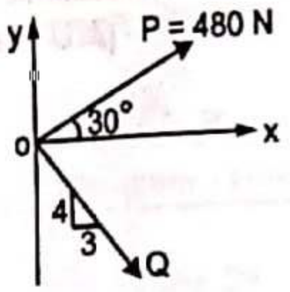

Solution: This is a system of two concurrent forces.

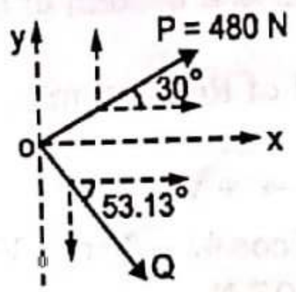

It is given that the resultant of the two forces acts along the x axis. This implies

$\Sigma F_x = R$

and $\Sigma F_y = 0$

Using the above equation $\Sigma F_y = 0 \uparrow +ve$

$= 480 \sin 30 - Q \sin 53.13 = 0$

$\therefore \quad Q = 300$ N .....**Ans.**

$\tan\theta = \frac{4}{3}$

or $\theta = 53.13°$

Knowing $\Sigma F_x = R$

$\therefore \quad R = 480 \cos 30 + 300 \cos 53.13$

$\therefore \quad R = 595.65$ N

or $\quad R = 595.65$ N $\rightarrow$ .....**Ans.**

Ex. 2.10 Determine the force F in cable BC if the resultant of the 3 concurrent forces acting at B is vertical. Also determine the resultant.

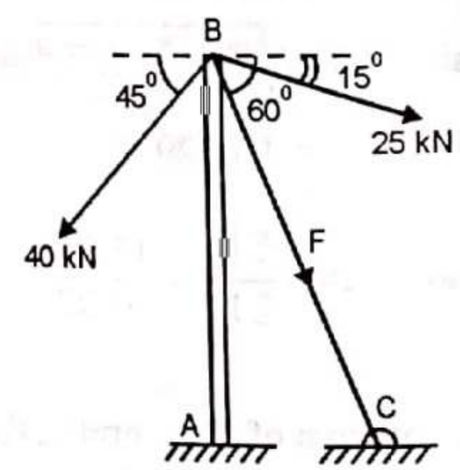

Solution: This is a concurrent system of three forces acting at B. Since the resultant force is vertical, it implies $\Sigma F_x = 0$ and $\Sigma F_y = R$

$\Sigma F_x \rightarrow +ve$

$25 \cos 15 - 40 \cos 45 + F \cos 60 = 0$

$\therefore \quad F = 8.27$ kN .....**Ans.**

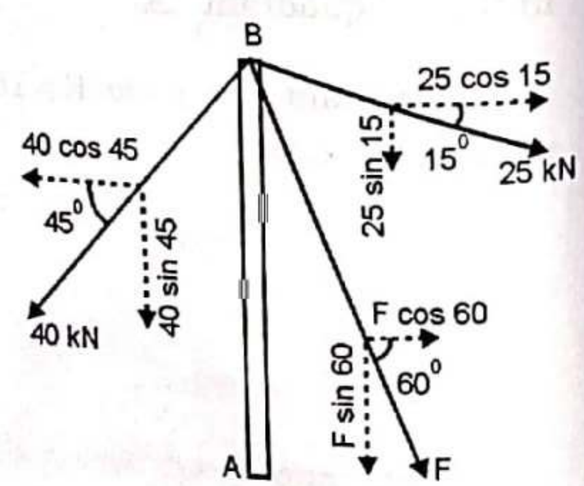

Also resultant

$R = \Sigma F_y \uparrow +ve$

$= -40 \sin 45 - 25 \sin 15 - 8.27 \sin 60$

$= -41.92$ kN

$\therefore \quad R = 41.92$ kN $\downarrow$ .....**Ans.**

$\therefore$ Resultant is a force = R = 41.92 kN $\downarrow$ acting at B .....**Ans.**

Ex. 2.11 A force R = 25 N has components F_a, F_b and F_C as shown in figure. If F_c = 20 N find F_a and F_b ***(MU Dec 07)***

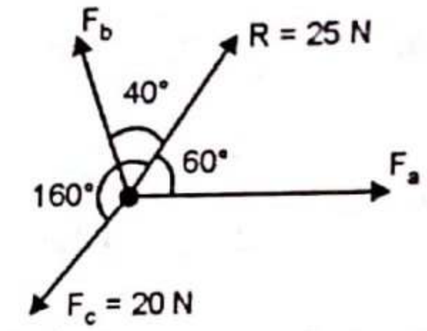

Solution: Given

The resultant force R = 25 N $\angle$ 60°

Implies $\Sigma F_x = 25 \cos 60$ and

$\Sigma F_y = 25 \sin 60$

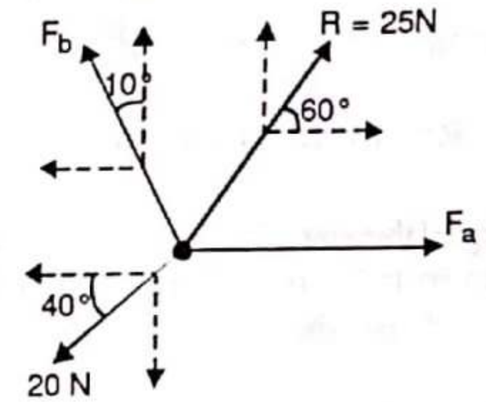

$\Sigma F_x = \rightarrow +ve$

$F_a - F_b \sin 10 - 20 \cos 40 = 25 \cos 60$

$\therefore \quad F_a - F_b \sin 10 = 27.82$ ..... (1)

$\Sigma F_y = \uparrow +ve$

$F_b \cos 10 - 20 \sin 40 = 25 \sin 60$

$\therefore \quad F_b = 35.04$ N ..... **Ans.**

Substituting in (1), we get $F_a = 33.9$ N ..... **Ans.**

Ex. 2.12 A car is being towed by application of two forces P and Q such that their resultant is R = 800 N.

Determine forces P and Q, when $\theta_1 = 25°$ and $\theta_2 = 35°$.

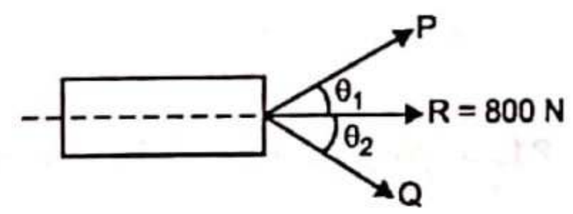

Solution: To find forces P and Q

Since the resultant is horizontal it implies

$\Sigma F_X = R$ and $\Sigma F_Y = 0$

using $\Sigma F_x = R \rightarrow +ve$

$P \cos 25 + Q \cos 35 = 800$ ..... (1)

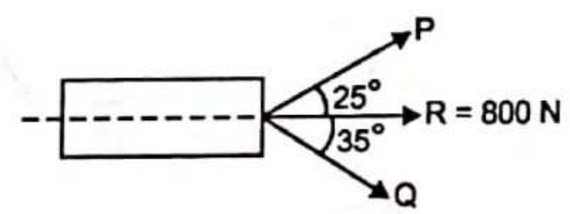

using $\Sigma F_y = 0 \uparrow +ve$

$P \sin 25 - Q \sin 35 = 0$ ..... (2)

Solving equations (1) and (2) we get P = 529.8 N and Q = 390.4 N ..... **Ans.**

Ex.2.13 Three concurrent forces P = 150 N, Q = 250 N and S = 300 N are acting at 120° with each other. Determine their resultant force magnitude and direction with respect to P. What is their equilibrant? ***(MU Dec 2015)***

Solution: This is a system of three concurrent forces.

Using Method of Resolution

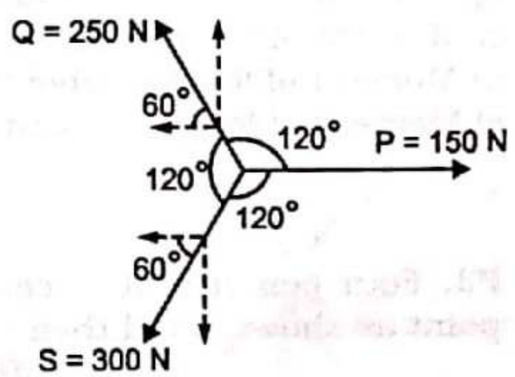

$\Sigma F_x \rightarrow +ve$

$= 150 - 250 \cos 60 - 300 \cos 60 = -125$ N

$\therefore \quad \Sigma F_x = 125$ N $\leftarrow$

$\Sigma F_y \uparrow +ve$

$= 250 \sin 60 - 300 \sin 60 = -43.3$ N

$\therefore \quad \Sigma F_y = 43.3$ N $\downarrow$

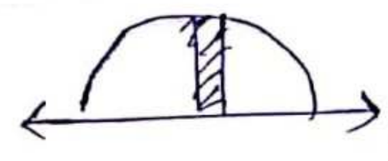

(19.3).

Using $R = \sqrt{\Sigma F_x^2 + \Sigma F_y^2} = \sqrt{125^2 + 43.3^2} = 132.29$ N ... Magnitude of resultant force

Also $\tan\theta = \dfrac{\Sigma F_y}{\Sigma F_x} = \dfrac{43.3}{125} = 0.3464$ $\therefore$ $\theta = 19.1°$ ... Direction of resultant force

The arrows of ΣF_x and ΣF_y indicates that the resultant force lies in the 3rd quadrant ... Sense of resultant force

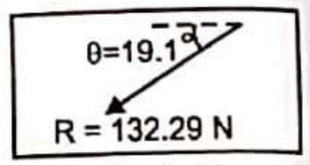

Resultant - Force

$\therefore$ Resultant is a force $R = 132.29$ N at $\theta = 19.1°$ acts as shown ... **Ans.**

Equilibrant Force: It is a force opposite to the resultant force and of the same magnitude as the resultant force.

$\therefore$ Equilibrant $E = 132.29$ N at $\theta = 19.1°$ ... **Ans.**

(Note: The concept of Equilibrant force is explained in Chapter 3)

Exercise 2.1

P1. Resolve the given forces into horizontal and vertical components.

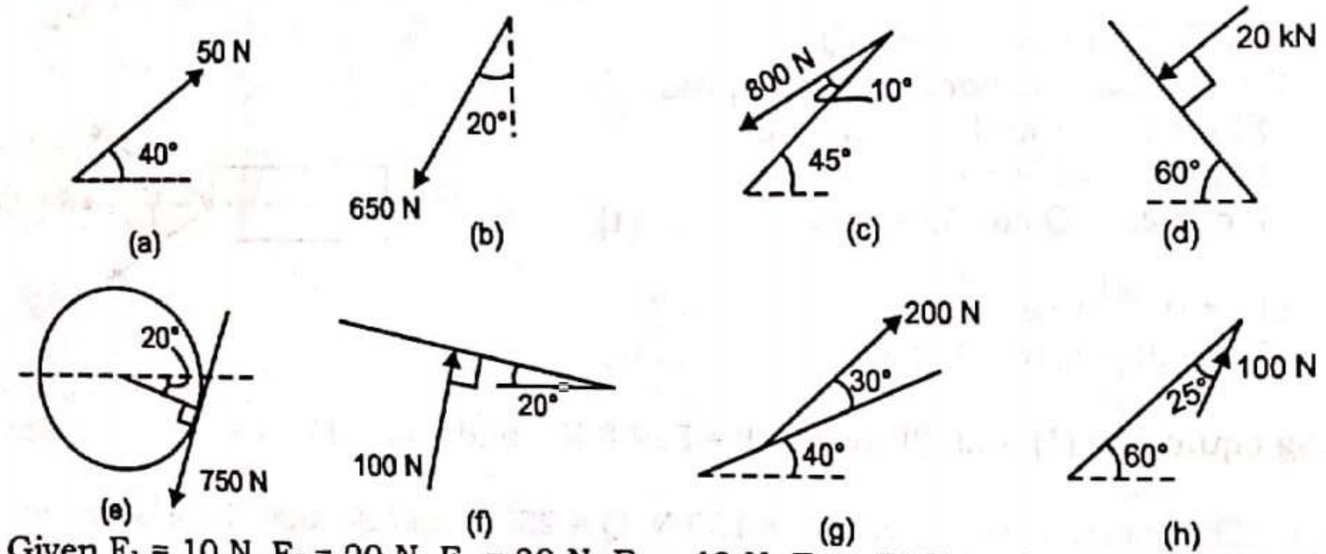

P2. Given $F_1 = 10$ N, $F_2 = 20$ N, $F_3 = 30$ N, $F_4 = 40$ N, $F_5 = 50$ N and taking anticlockwise moments as positive, Find

a) Moment of force F_1 about B and E
b) Moment of force F_2 about A and C
c) Moment of force F_3 about F
d) Moment of force F_4 about B and D
e) Moment of force F_5 about A, F and D

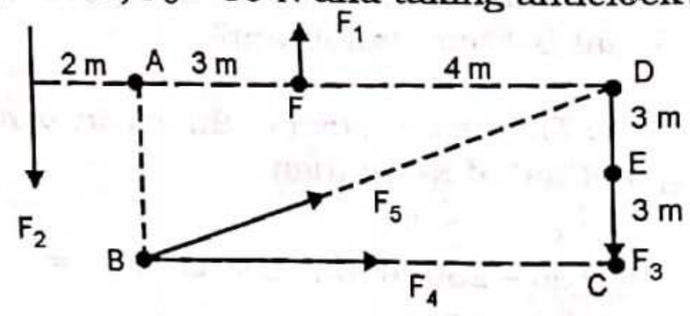

P3. Four concurrent forces act at a point as shown. Find their resultant. ***(MU Dec 14)***

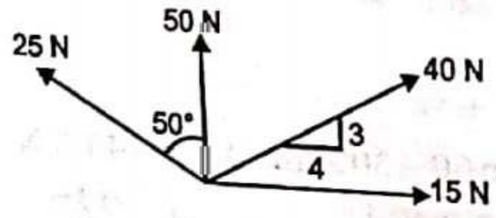

P4. Determine the resultant of the given concurrent force system. ***(NMIMS May 17)***

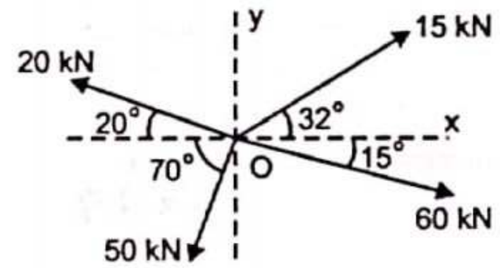

P5. The striker of carom board lying on the board is being pulled by four players as shown in the figure. The players are sitting exactly at the centre of the four sides. Determine the resultant of forces in magnitude and direction. ***(MU May 08, NMIMS Feb 10, KJS May 15)***

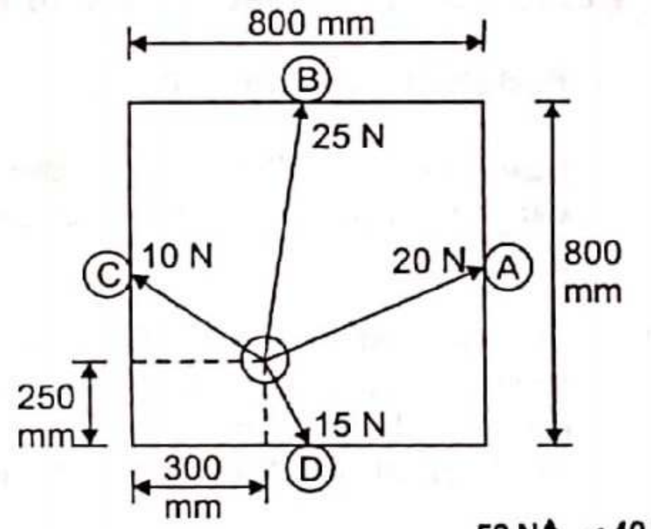

P6. Five concurrent coplanar forces act on a body as shown in figure. Find the force P and Q such that the resultant of the five forces is zero. ***(MU Dec 09, May 13)***

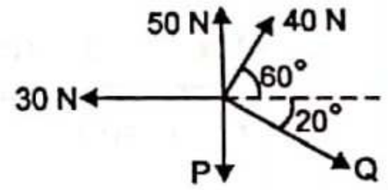

P7. Figure shows a concurrent system of four forces. Three of the four forces are shown. Find the unknown fourth force 'P' given that the resultant of the system is a horizontal force of 500 N acting to the right.

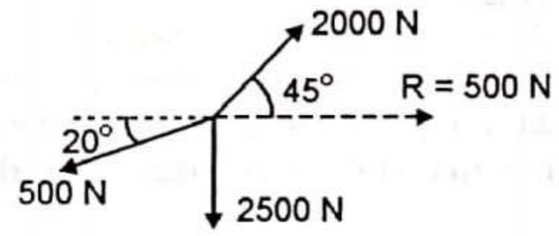

P8. For the system shown, determine

(i) The required value of α if resultant of three forces is to be vertical.

(ii) The corresponding magnitude of resultant. ***(MU Dec 08)***

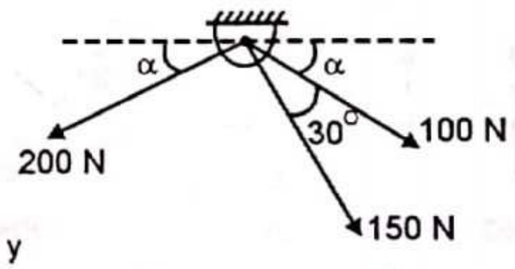

P9. A ring is pulled by three forces as shown in figure. Find the force F and the angle θ if resultant of these three forces is 100 N acting in vertical direction. ***(MU Dec 13)***

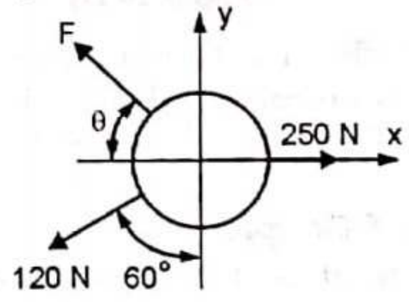

P10. Find the force F4 so as to give the resultant of the force systems shown. ***(MU Dec 16)***

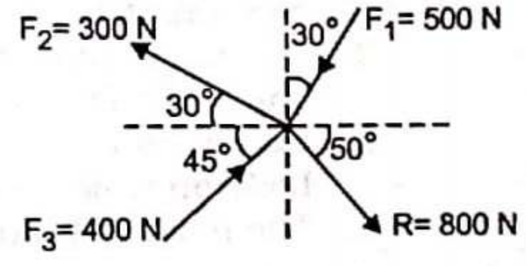

P11. If the resultant of three forces is acting along the arm OA (from O to A). Determine force F_1 and its direction θ. The magnitude of the resultant is 600 N. ***(KJS Dec 17)***

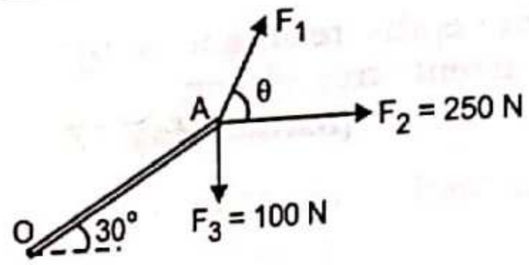

2.11 Resultant of Parallel System of Forces

To find the Resultant of Parallel Force System follow the given steps,

Step 1: Since in a parallel system, the forces are directed in one direction only, they can be simply added up using a sign convention for the sense of the force. i.e. $R = \Sigma F$

Step 2: Location of the resultant force forms an important step. The point of application of the resultant force is found out using Varignon's theorem, discussed earlier in article 2.7. The resultant is initially assumed to act either to the right or left of the reference point at a ⊥ distance d.

Varignon's theorem $\Sigma M_A^F = M_A^R$ is used. If a positive value of d is obtained then the assumption made earlier is true. If a negative value of d is obtained the resultant lies on the opposite side to what was assumed.

2.12 Couple

Couple is a special case of parallel forces. Two parallel forces of equal magnitude and opposite sense form a couple. The effect of a couple is to rotate the body on which it acts. Fig. 2.14 shows a couple formed by two forces of same magnitude F, separated by a ⊥ distance d known as the arm of the couple.

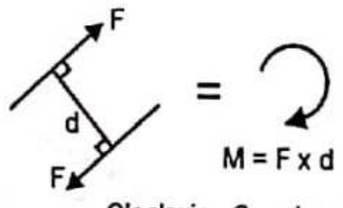

Clockwise Couple

Fig. 2.14 (a)

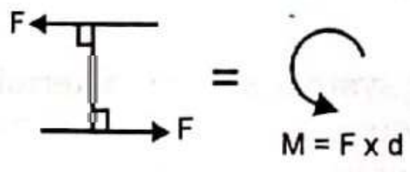

Anti-clockwise Couple

Fig. 2.14 (b)

The magnitude of rotation known as the moment of a couple is $M = F \times d$. Rotation of a couple could be clockwise Fig. 2.14 (a) or could be anti-clockwise Fig. 2.14(b). Couples are represented by curved arrows. Units are N.m, kN.m etc.

2.13 Properties of Couple

1. Couple tend to cause rotation of the body about an axis ⊥ to the plane containing the two parallel forces.
2. The magnitude of rotation or moment of a couple is equal to the product of one of the forces and the arm of the couple.
3. Couple is a free vector because of which it can be moved anywhere on the body on which it acts without causing any change.
4. The resultant force of a couple system is zero.

5. To balance a system whose resultant is a couple, another couple of the same magnitude and opposite sense is required to be added.
6. To shift a force to a new parallel position, a couple is required to be added to the system. For example in Fig. 2.15 (a), force F is required to be shifted from its original position at A to a new parallel position B. This is done by adding two collinear forces of same magnitude F and – F at B Fig. 2.15 (b). The two parallel forces F at A and – F at B form a couple. Thus we have a single force F at B and a couple $M = F \times d$ in the system Fig. 2.15 (c). Such a system is called as a force couple system.

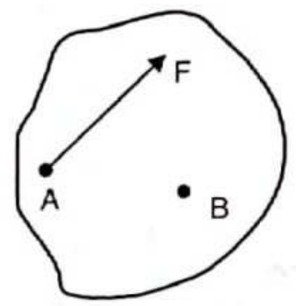

Force originally at A

Fig. 2.15 (a)

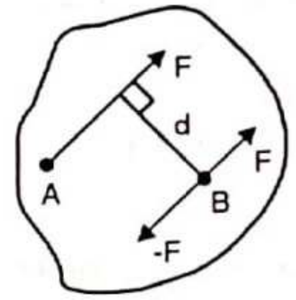

Two collinear forces added at B

Fig. 2.15 (b)

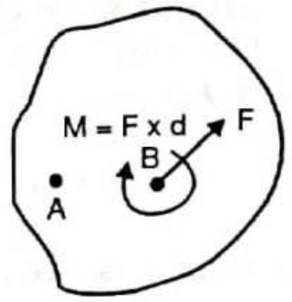

Force shifted to B with a couple added

Fig. 2.15 (c)

Ex. 2.14 Determine the resultant of the parallel system of forces.

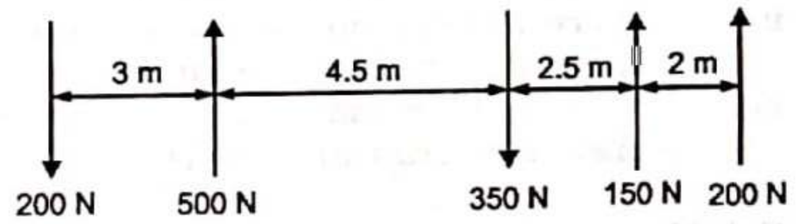

Solution: This is a parallel system of five forces.

Resultant force $R = \Sigma F \uparrow +ve$

$= -200 + 500 - 350 + 150 + 200$

$= 300$ N

$\therefore R = 300$ N ↑

Location of the resultant force.

Let the resultant force be located at a ⊥ distance 'd' to the right of the 200 N force as shown. Let 'A' be a point on the line of action of the 200 N force.

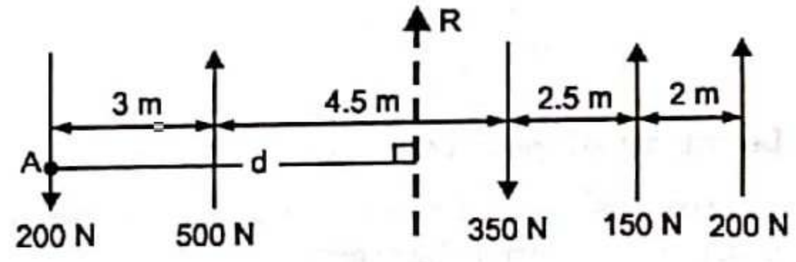

Using Varignon's theorem

$\Sigma M_A^F = M_A^R$ ↺ +ve

$= +(500 \times 3) - (350 \times 7.5) + (150 \times 10) + (200 \times 12) = +(300 \times d)$

$\therefore d = 9.25$ m

Hence, the resultant force R = 300 N ↑ lies at ⊥ distance d = 9.25 m to the right of A. ..... **Ans.**

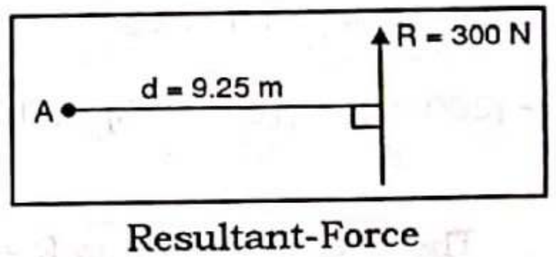

Resultant-Force

Ex. 2.15 Find the resultant of the parallel force system

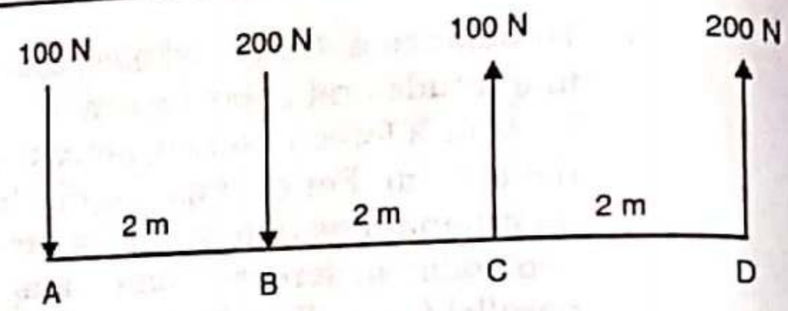

Solution: This is a parallel system of four forces

$R = \Sigma F \uparrow$ + ve

$= -100 - 200 + 100 + 200$

$= 0$

$\therefore$ the resultant force $R = 0$

Since the resultant force of the parallel system is zero, the resultant is a couple. To find the value of the couple, taking moments of all forces about any point say A.

ΣM_A ↺ + ve

$= -(200 \times 2) + (100 \times 4) + (200 \times 6)$

$= 1200$ Nm

$= 1200$ Nm ↺

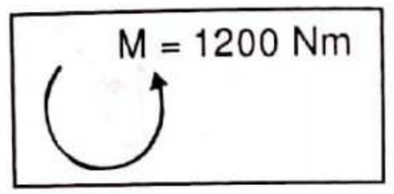

Resultant-Couple

The resultant of the system is a couple as shown in figure ..... **Ans.**

Ex. 2.16 Figure shows four parallel forces acting on a beam ABCD.

i) Determine the resultant of the system and its location from A.

ii) Replace the system by a single force and a couple acting at point B.

iii) Replace the system by a single force and couple acting at point D.

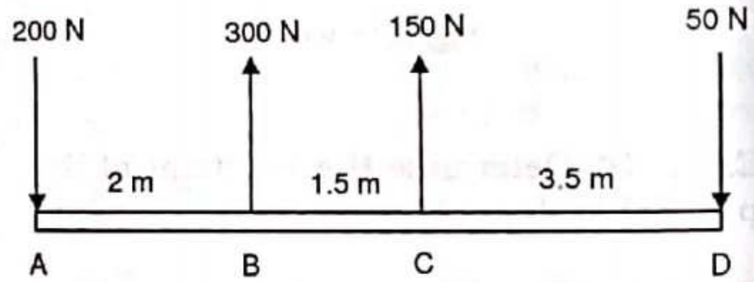

Solution: This is a parallel system of four forces acting on the beam ABCD.

i) Resultant $R = \Sigma F \uparrow$ + ve

$= -200 + 300 + 150 - 50$

$= 200$ N

or $R = 200$ N ↑

Location of resultant force from A

Let the resultant force be located at a perpendicular distance 'd' to the right of A.

Using Varignon's theorem

$\Sigma M_A^F = M_A^R$ ↺ + ve

$+(300 \times 2) + (150 \times 3.5) - (50 \times 7) = +(200 \times d)$

$\therefore \quad d = 3.875$ m

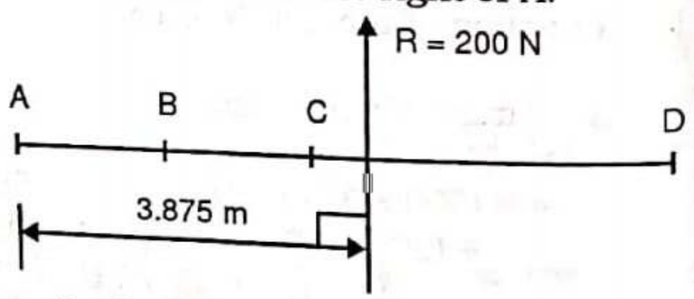

$\therefore$ The resultant force is $R = 200$ N ↑ at a perpendicular distance $d = 3.875$ m to the right of A. ..... **Ans.**

(ii) The single force acting at B would be the resultant $R = 200$ N ↑

To find the couple at B, take moments of all forces about B

ΣM_B ↺ + ve

$= +(200 \times 2) + (150 \times 1.5) - (50 \times 5)$

$= 375$ Nm

$= 375$ Nm ↺

Hence, the system of four forces can be replaced by a single force $R = 200$ N ↑ and a couple of 375 Nm ↺ at B. This is referred to as a force couple system at B.

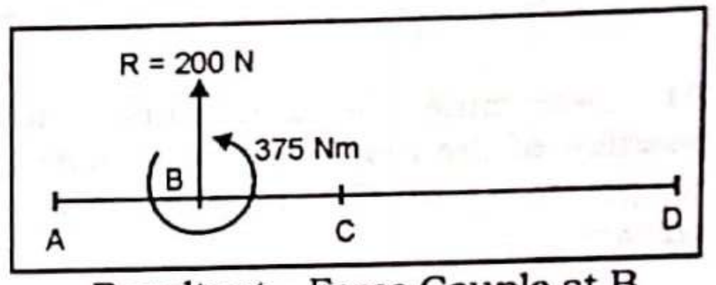

Resultant - Force Couple at B

..... **Ans.**

(iii) The single force acting at D would be the resultant $R = 200$ N ↑

To find the couple at D, take moments of all forces about D

ΣM_D ↺ + ve

$= +(200 \times 7) - (300 \times 5) - (150 \times 3.5)$

$= -625$ Nm

$= 625$ Nm ↻

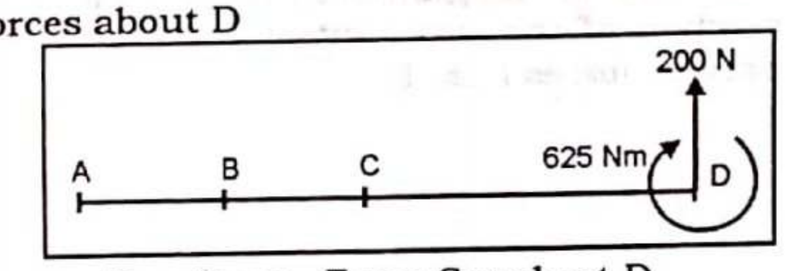

Resultant - Force Couple at D

Hence, the system of four forces can be replaced by a single force $R = 200$ N ↑ and a couple of 625 Nm ↻ at D. This is referred to as a force couple system at D. ..... **Ans.**

Ex. 2.17 Determine the resultant of the coplanar parallel forces shown and locate it w.r.t. O. Radius of circle is 2 m.

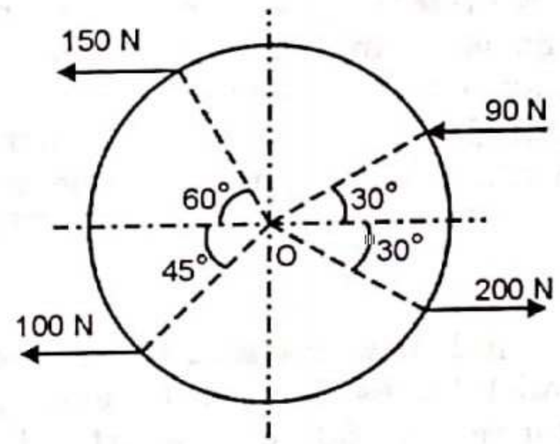

Solution: This is a system of four parallel forces.

For a parallel system,

Resultant force $R = \Sigma F \rightarrow$ + ve

$\therefore \quad R = 200 - 90 - 150 - 100$

$= -140$ N

Or $\quad R = 140$ N ←

Location of resultant force

Let us assume the resultant force is located at a perpendicular distance d above O as shown.

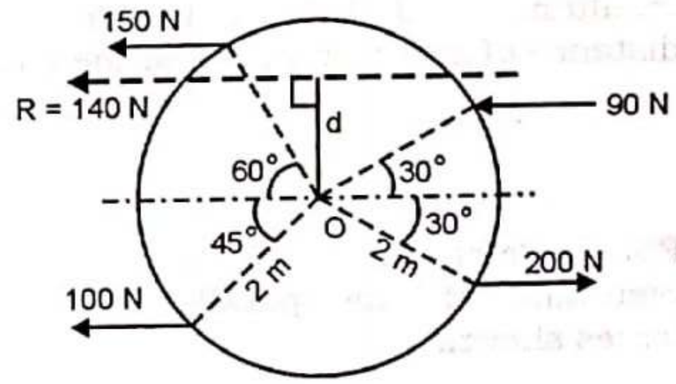

Using Varignon's theorem

$\Sigma M_O^F = M_O^R$ ↺ + ve

$+(200 \times 2\sin 30) + (90 \times 2\sin 30) + (150 \times 2\sin 60)$

$-(100 \times 2\sin 45) = +(140 \times d)$

$\therefore \quad d = 2.917$ m Or $d = 2.917$ m above O

The resultant is $R = 140$ N ← is located at a ⊥ er distance $d = 2.917$ m above O as shown in figure. ..... **Ans.**

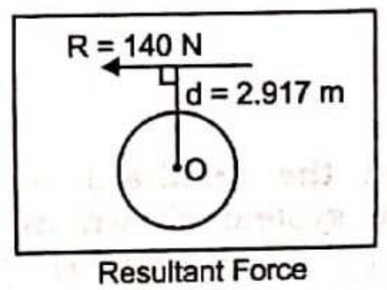

Resultant Force

Exercise 2.2

P1. Determine the magnitude and position of the resultant with respect to point A, of the parallel forces shown.

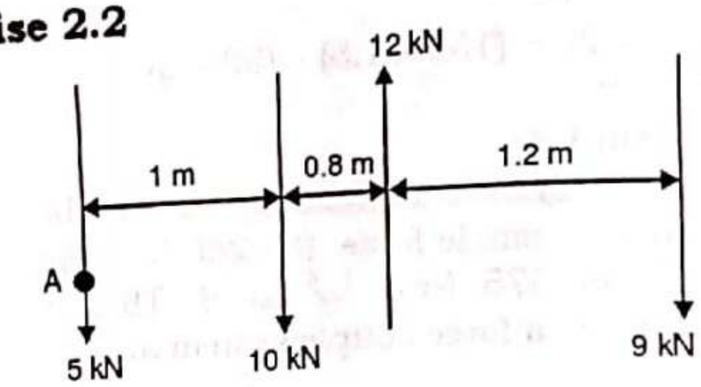

P2. Find the magnitude, nature and position of the resultant of the four parallel forces from B.

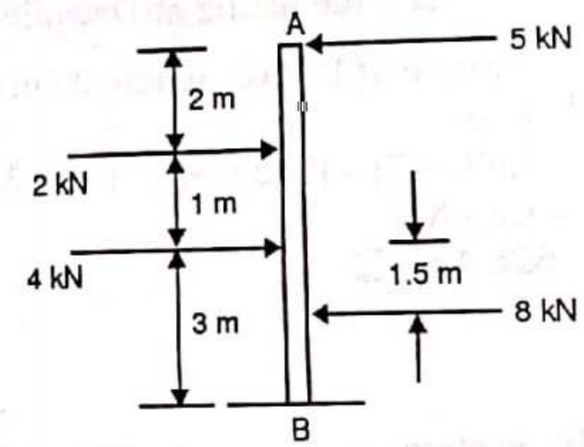

P3. A system of parallel, non-concurrent forces is acting on a rigid bar. Reduce this system of forces to
i) A single forces R and its position from A
ii) A single force R and a couple at B
(VJTI Nov 10)

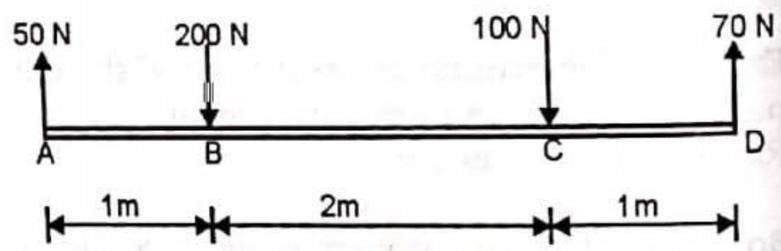

P4. Find the magnitude of two like parallel forces F_1 and F_2 acting at a distance of 50 cm apart, if their resultant is 300 N and acts at a distance of 20 cm from one of the force.

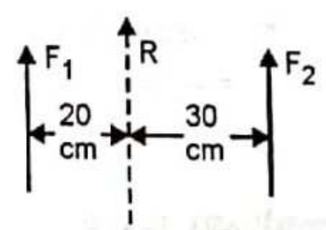

P5. Determine the resultant of the parallel forces shown.

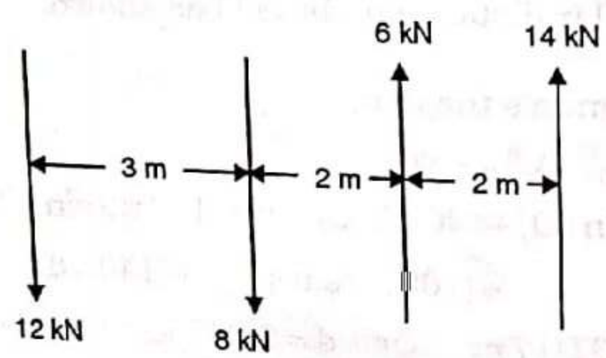

P6. Find the resultant of the force system shown in figure. ***(MU Dec 17)***

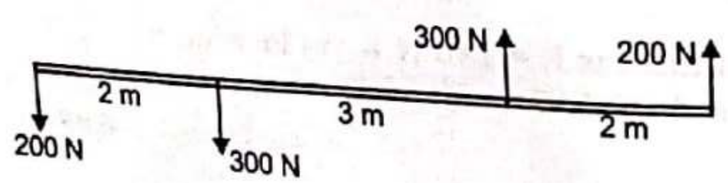

P7. Determine the resultant of the system shown.

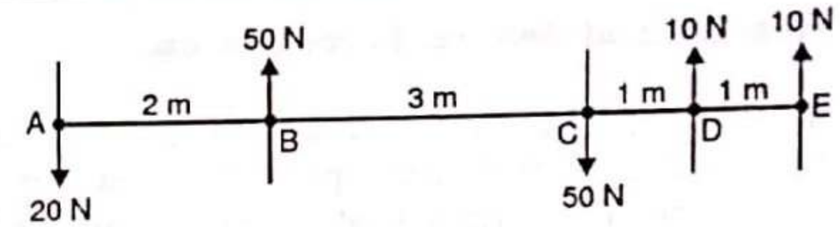

P8. Resolve 15 kN force acting at 'A' into two parallel components at B and C

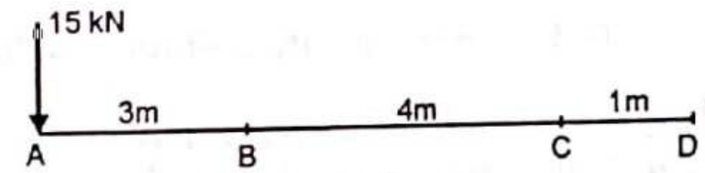

P9. Resolve the force F = 1000 N acting at B into parallel component forces at O and A. ***(VJTI Nov 16)***

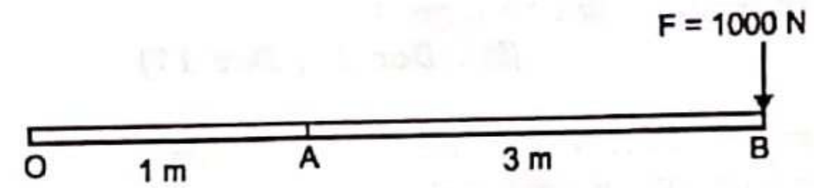

P10. Figure shows a parallel system of four forces and two couples.
(i) Replace it by a single force and obtain its location from point A
(ii) Replace it by a force couple system at point A.
(iii) Replace it by a force couple system at point D.
(iv) Replace it by two parallel forces at B and D.

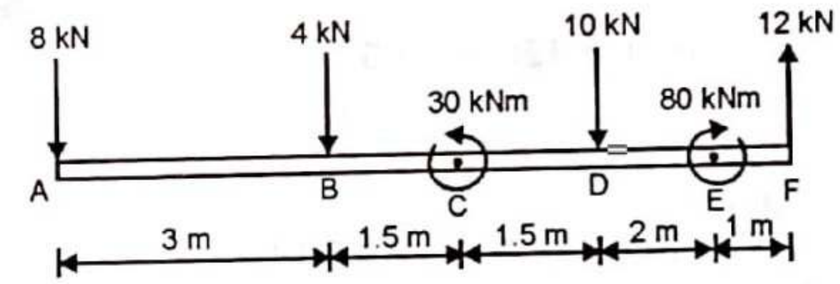

P11. A member ABC is loaded by distributed load and pure moment as shown in the figure. Find the (i) magnitude and (ii) position along AC of the resultant.
(MU Dec 13, KJS Dec 14)

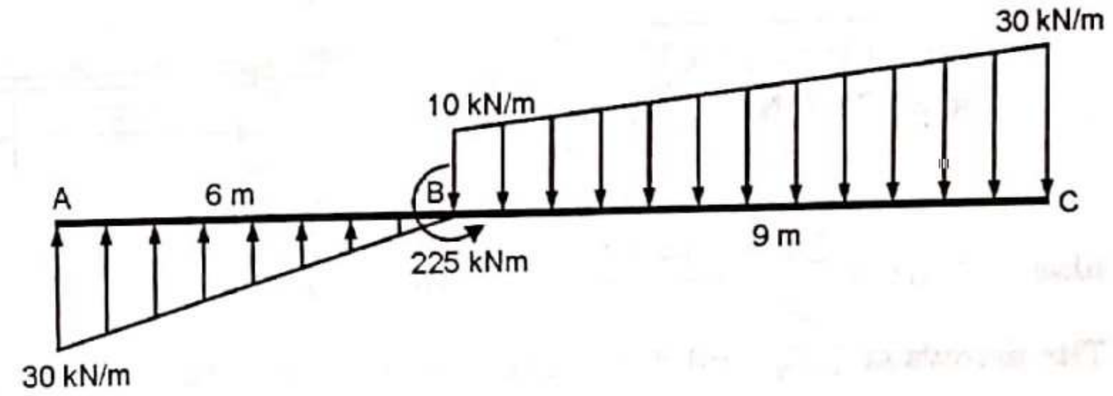

[Solve this problem after studying Types of loads in next Chapter 3]

$-200+300+200-300$
$=0.$

$-200\times2+300\times5+200\times4$

2.14 Resultant of General Force System

To find the Resultant of General Force System follow the given steps.

Step 1 : Follow the same procedure as discussed in article 2.10 and get the resultant force R of the system using Method of Resolution.

Step 2 : To locate the position of the resultant follow step 2 of article 2.11.

Ex. 2.18 Find the resultant of the forces acting on the bell crank lever shown. Also locate its position w.r.t hinge B.

(MU Dec 13, Dec 17)

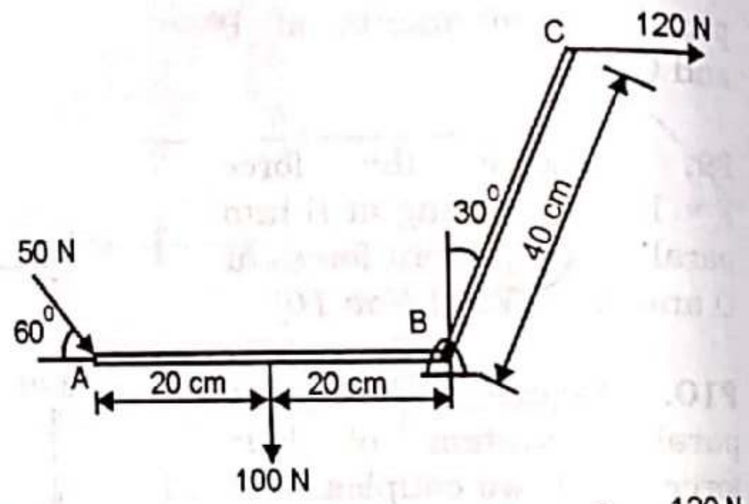

Solution: This is a general system of three forces acting on the bell crank.

$\Sigma F_x \rightarrow +ve$

$= 50 \cos 60 + 120 = 145$ N

$\therefore \Sigma F_x = 145$ N $\rightarrow$

$\Sigma F_y \uparrow +ve$

$= -50 \sin 60 - 100 = -143.3$ N

$\therefore \Sigma F_y = 143.3$ N $\downarrow$

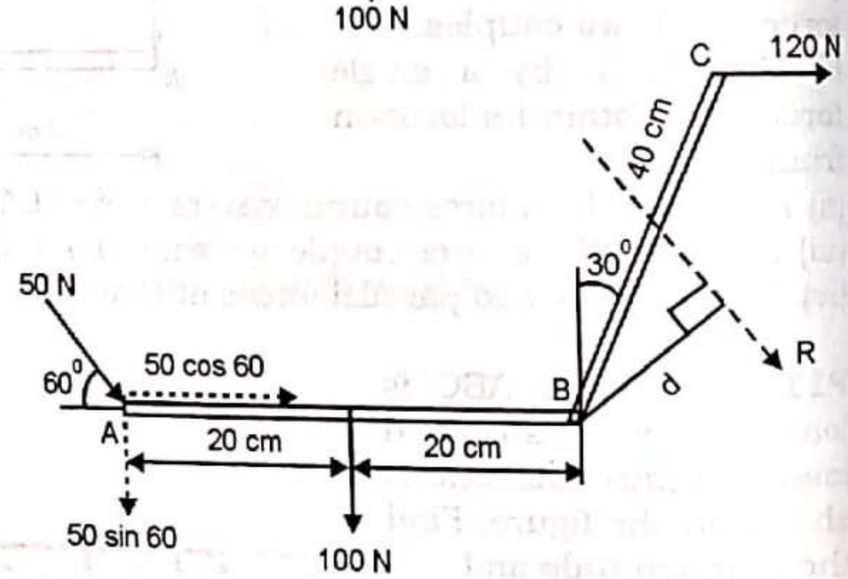

Using $R = \sqrt{(\Sigma F_x)^2 + (\Sigma F_y)^2}$

$= \sqrt{145^2 + 143.3^2}$

$\therefore$ R = 203.8 N ... Magnitude

also $\tan\theta = \dfrac{\Sigma F_y}{\Sigma F_x} = \dfrac{143.3}{145}$ or $\theta = 44.66°$ ... Direction of resultant force

The arrows of ΣF_x and ΣF_y, indicates that the resultant force lies in 4th quadrant ↘ ... Sense of resultant force

Location of resultant force

Let us assume the resultant force R is located at a perpendicular distance 'd' to the right of B as shown.

Using Varignon's theorem

$\Sigma M_B^F = M_B^R$ ↺ +

$+ (50 \sin 60 \times 40) + (100 \times 20)$

$- (120 \times 40 \cos 30) = -(203.8 \times d)$

$\therefore$ d = 2.08 cm

or d = 2.08 cm to the right of B ... location of resultant force.

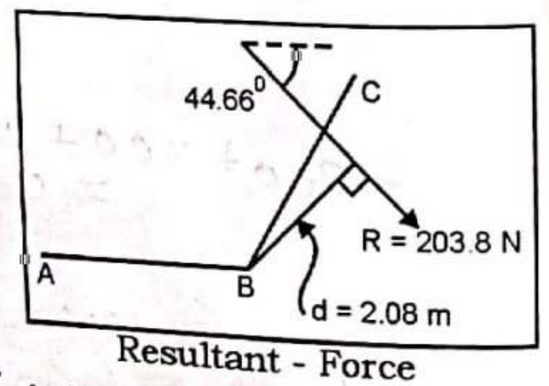

Resultant - Force

Hence, the resultant force R = 203.8 N at $\theta = 44.66°$ ↘ is located at a ⊥ distance d = 2.08 cm to the right of B as shown. ..... **Ans.**

Ex. 2.19 Determine the resultant of four forces tangential to the circle of radius 4 cm as shown. What will be the location of the resultant with respect to the center of the circle?

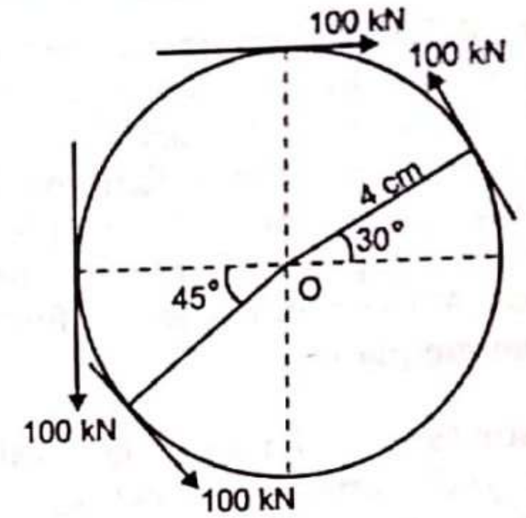

Solution: This is a general system of four forces acting on a circle.

$\Sigma F_x \rightarrow +ve$

$= 100 + 100 \cos 45 - 100 \cos 60$

$= 120.7$ kN

$\therefore \Sigma F_x = 120.7$ kN $\rightarrow$

$\Sigma F_y \uparrow +ve$

$= -100 - 100 \sin 45 + 100 \sin 60$

$= -84.1$ kN

$\therefore \Sigma F_y = 84.1$ kN $\downarrow$

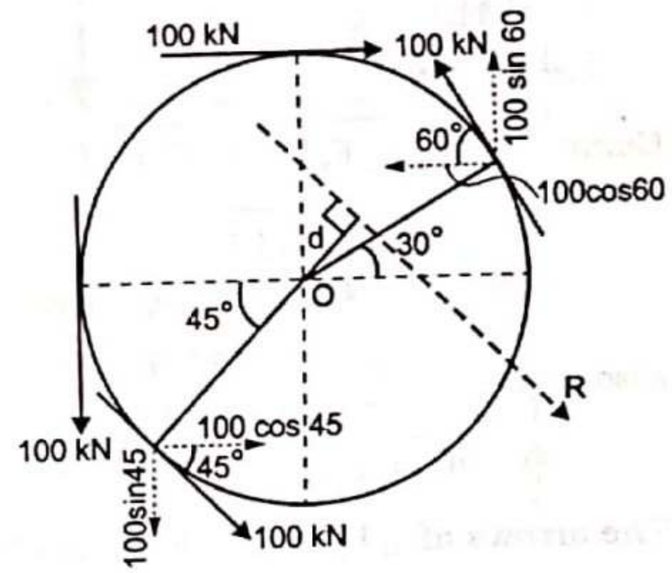

Using $R = \sqrt{(\Sigma F_x)^2 + (\Sigma F_y)^2}$

$= \sqrt{120.7^2 + 84.1^2}$

$\therefore$ R = 147.1 N ... Magnitude of resultant

also $\tan\theta = \dfrac{\Sigma F_y}{\Sigma F_x} = \dfrac{84.1}{120.7}$

or $\theta = 34.86°$ ... Direction of resultant

The arrows of ΣF_x and ΣF_y indicates that the resultant force lies in the 4th quadrant ↘ ... Sense of resultant force

Location of resultant force

Let us assume the resultant force R is located at a ⊥er distance d to the right of O as shown.

Using Varignon's theorem

$\Sigma M_O^F = M_O^R$ ↺ +ve

$-(100 \times 4) + (100 \times 4) + (100 \times 4)$

$+ (100 \times 4) = -(147.1 \times d)$

d = – 5.44 m

negative sign indicates that the assumed location of resultant right of O is incorrect.

$\therefore$ d = 5.44 m left of O

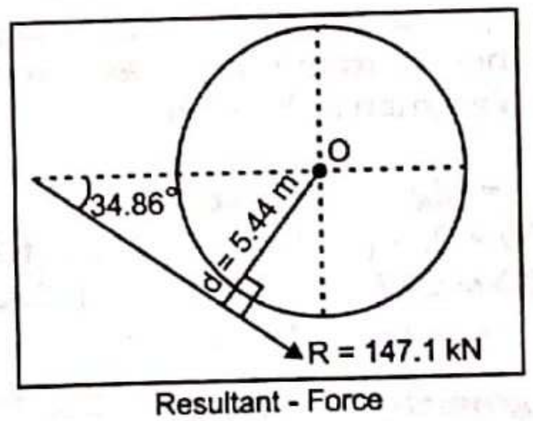

Resultant - Force

Hence, the resultant force R = 147.1 kN at $\theta = 34.86°$ ↘ is located at a ⊥ distance d = 5.44m, left of O. ..... **Ans.**

Ex. 2.20 A dam is subjected to three forces, 50 kN on the upstream face AB, 30 kN force on the down stream inclined face and its own weight of 120 kN as shown. Determine the single force and locate its point of intersection with the base AD assuming all the forces to lie in a single plane

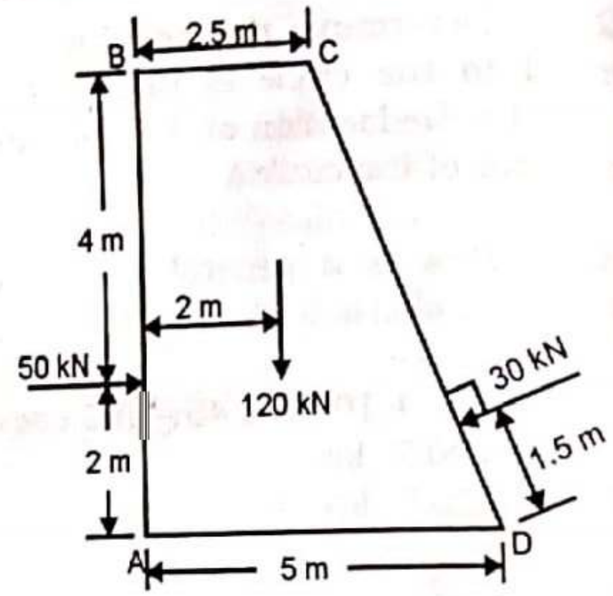

Solution: This is a general system of three coplanar forces acting on the dam.

$\Sigma F_x \rightarrow +ve$

$= 50 - 30 \sin 67.4$

$= 22.3 \text{ kN} \rightarrow$

From geometry

$\tan\alpha = \frac{6}{2.5}$

$\therefore \alpha = 67.4°$

$\Sigma F_y \uparrow +ve$

$= -120 - 30 \cos 67.4$

$= -131.5 \text{ kN}$

$= 131.5 \text{ kN} \downarrow$

Using $R = \sqrt{(\Sigma F_x)^2 + (\Sigma F_y)^2}$

$= \sqrt{22.3^2 + 131.5^2}$

$\therefore R = 133.4 \text{ kN}$ ...Magnitude

also $\tan\theta = \frac{\Sigma F_y}{\Sigma F_x} = \frac{131.5}{22.3}$

$\therefore \theta = 80.4°$ ... Direction

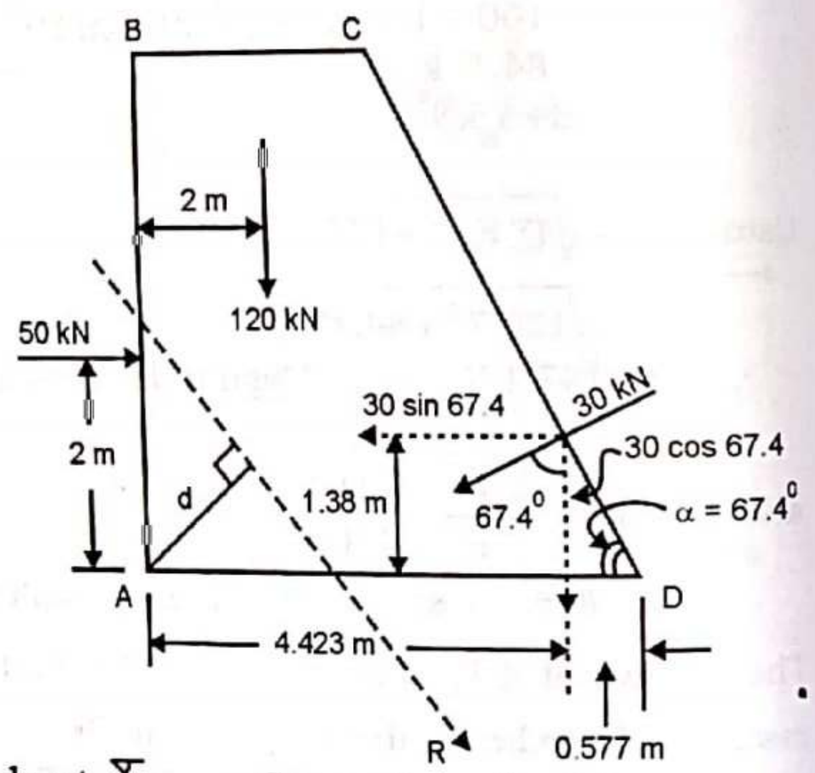

The arrows of ΣF_x and ΣF_y indicates that the resultant force lies in the 4th quadrant ↘ ... Sense of resultant force

Point of intersection of the resultant force with base AD

Let the resultant force lie at a perpendicular distance 'd' to the right of A, cutting the base at a distance x from end A, as shown.
Using Varignon's theorem

$\Sigma M_A^F = M_A^R$ ↺ +ve

$-(50 \times 2) - (120 \times 2) - (30 \cos 67.4 \times 4.423)$
$+ (30 \sin 67.4 \times 1.38) = -(133.4 \times d)$

$\therefore d = 2.64 \text{ m}$

From geometry $\sin 80.4 = \frac{d}{x} = \frac{2.64}{x}$

$\therefore x = 2.68 \text{ m}$

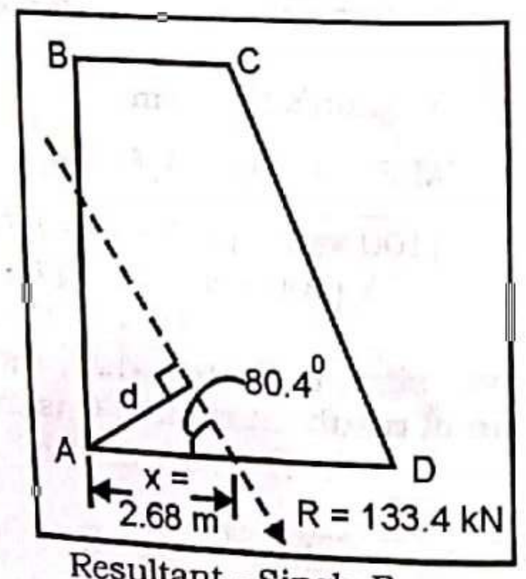

Resultant - Single Force

Hence, Resultant force R = 133.4 kN at θ = 80.4° ↘ lies at ⊥ distance d = 2.64 m right of A and cuts the base AD at x = 2.68 m. ..... **Ans.**

Ex. 2.21 Find the resultant of the force system acting on a body OABC shown in figure. Find the distance of the resultant from O. Also find the points where the resultant will cut the x and y axis.

(MU Dec 10)

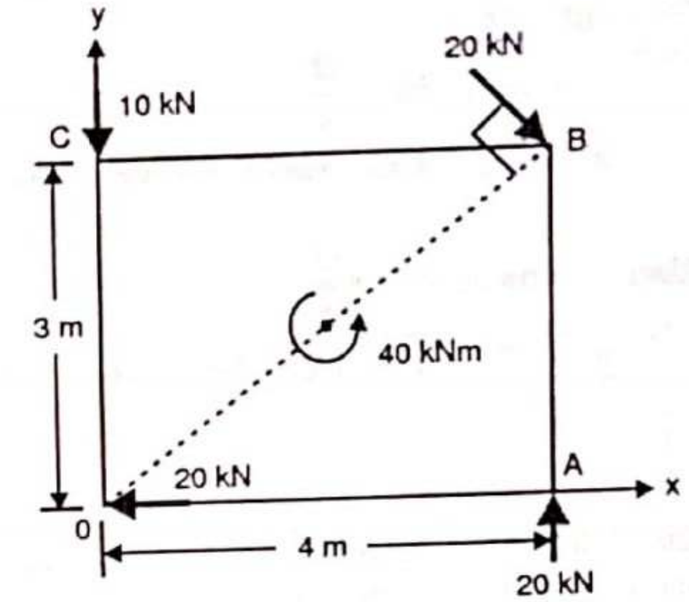

Solution: This is a general force system of four forces and a couple of 40 kNm acting on the body OABC.

$\Sigma F_x \rightarrow +ve$

$= 20 \cos 53.13 - 20$

$= -8$

$\therefore \Sigma F_x = 8 \text{ kN} \leftarrow$

$\Sigma F_y \uparrow +ve$

$= -10 - 20 \sin 53.13 + 20$

$= -6$

$\therefore \Sigma F_y = 6 \text{ kN} \downarrow$

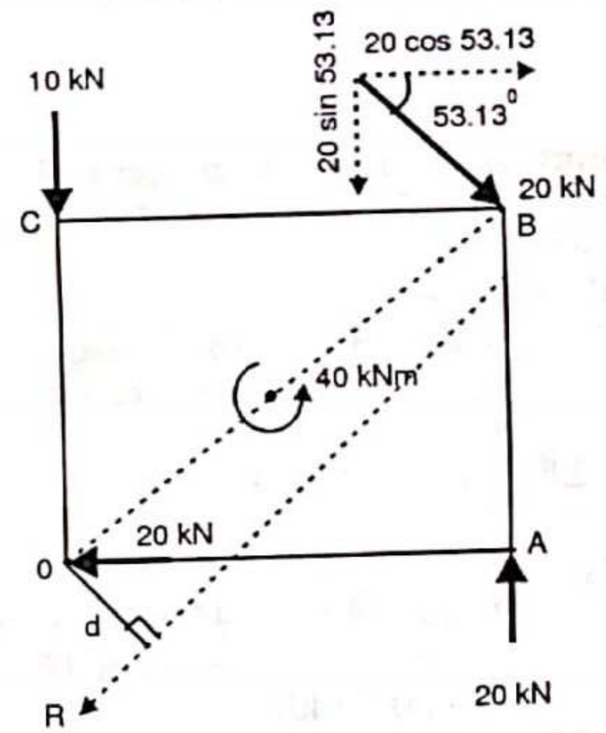

Using $R = \sqrt{(\Sigma F_x)^2 + (\Sigma F_y)^2}$

$= \sqrt{8^2 + 6^2}$

$\therefore R = 10 \text{ kN}$ ... Magnitude of resultant

also $\tan\theta = \frac{\Sigma F_y}{\Sigma F_x} = \frac{6}{8} = 0.75$

$\therefore \theta = 36.86°$ ... Direction of resultant

The arrows of ΣF_x and ΣF_y indicates that the resultant force lies in the 3rd quadrant ↙ ... Sense of resultant force

Location of resultant force

Let us assume the resultant force is located at a ⊥ distance 'd' to the right of O as shown in the figure.

Using Varignon's theorem

$\Sigma M_O^F = M_O^R$ ↺ +ve

$+40 - (20 \sin 53.13 \times 4) - (20 \cos 53.13 \times 3) + (20 \times 4) = -(10 \times d)$

$\therefore d = -2 \text{ m}$

or $d = 2 \text{ m}$ left of O

negative sign indicates that the assumed location of resultant force right of O is incorrect.

$\therefore$ The resultant force R = 10 kN at θ = 36.86° ↙ lies at ⊥ distance d = 2 m to the left of O. ..... **Ans.**

Point of intersection with x and y axis

Let the resultant cut the x-axis and the y-axis at a distance x and y as shown.

From geometry

$$\sin 36.86 = \frac{2}{x}$$

$\therefore$ x = 3.34 m (on the – ve x–axis)

Also $\cos 36.86 = \frac{2}{y}$

$\therefore$ y = 2.5 m (on the + ve y–axis)

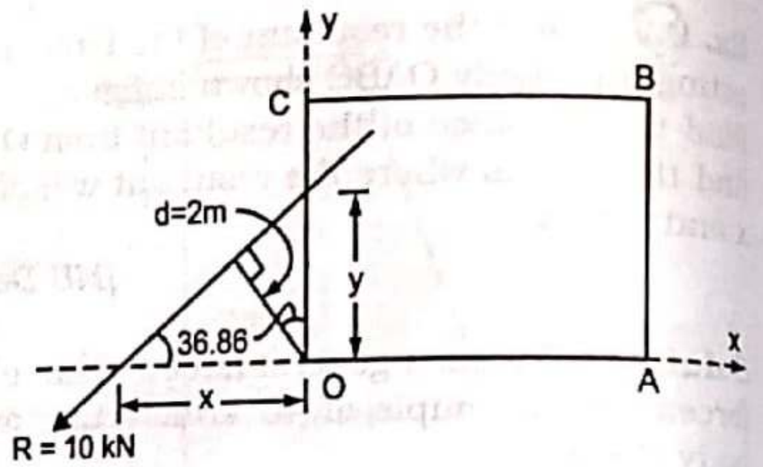

Ex. 2.22 A set of five forces are acting on a plate as shown. Determine the resultant force of the force system from point O.

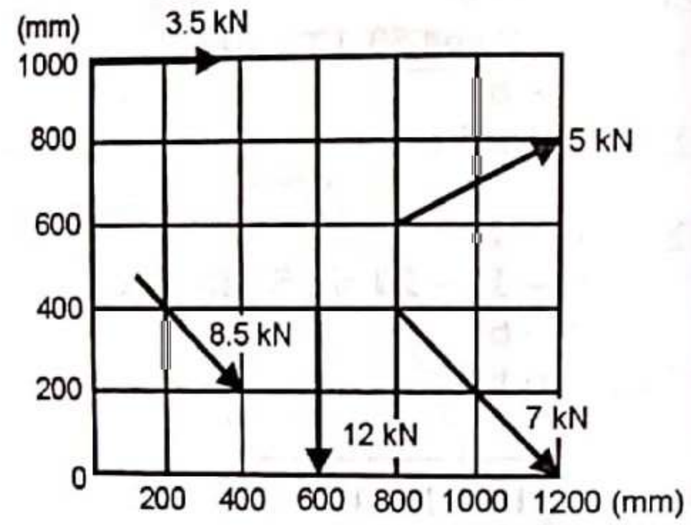

Solution: This is a general force system of five forces acting on the plate.

$\Sigma F_x \rightarrow$ + ve

$= 3.5 + 8.5\cos 45 + \boxed{5\cos 26.56} + 7\cos 45$

$= 18.93$ kN

$\therefore \Sigma F_x = 18.93$ kN $\rightarrow$

$\Sigma F_y \uparrow$ + ve

$= -12 - 8.5\sin 45 + 5\sin 26.56 - 7\sin 45$

$= -20.72$ kN

$\therefore \Sigma F_y = 20.72$ kN $\downarrow$

Using $R = \sqrt{(\Sigma F_x)^2 + (\Sigma F_y)^2}$

$= \sqrt{18.93^2 + 20.72^2}$

$\therefore$ R = 28.06 kN

... Magnitude of resultant

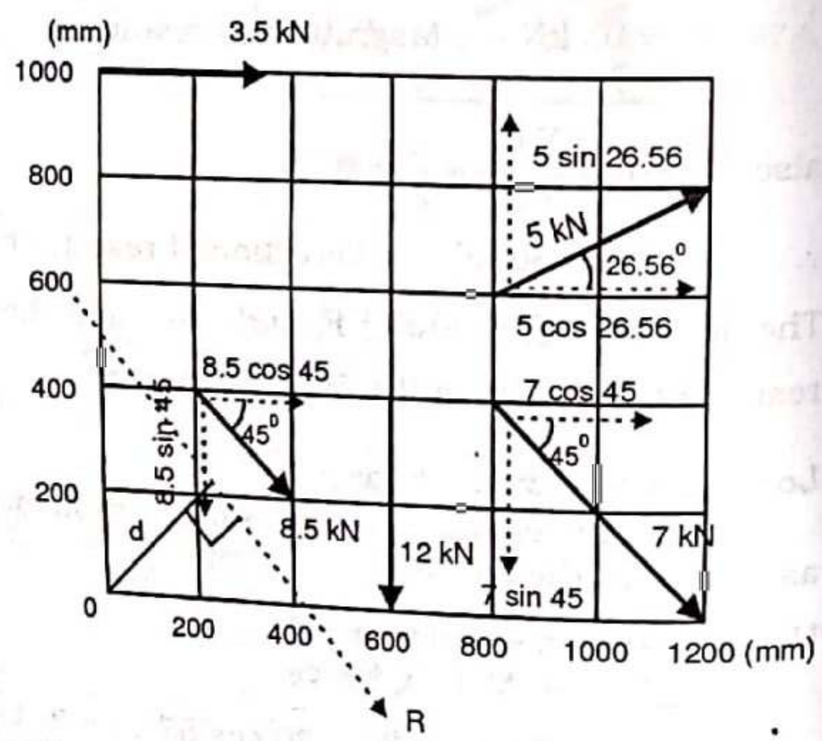

also $\tan\theta = \frac{\Sigma F_y}{\Sigma F_x} = \frac{20.72}{18.93}$ $\therefore \theta = 47.58°$

... Direction of resultant.

The arrows of ΣF_x and ΣF_y indicates that the resultant force lies in 4th quadrant $\searrow$

... Sense of resultant force

Location of resultant force

Let us assume that the resultant force is located at a $\perp$ distance 'd' to the right of O as shown in the figure.

Using Varignon's theorem

$\Sigma M_O^F = M_O^R$ $\circlearrowleft$ + ve

$-(3.5 \times 1000) - (8.5\cos 45 \times 400) - (8.5\sin 45 \times 200) - (5\cos 26.56 \times 600)$
$+ (5\sin 26.56 \times 800) - (7\cos 45 \times 400) - (7\sin 45 \times 800) - (12 \times 600) = -(28.06 \times d)$

$\therefore$ 21141 = 28.06 d

$\therefore$ d = 753.4 mm

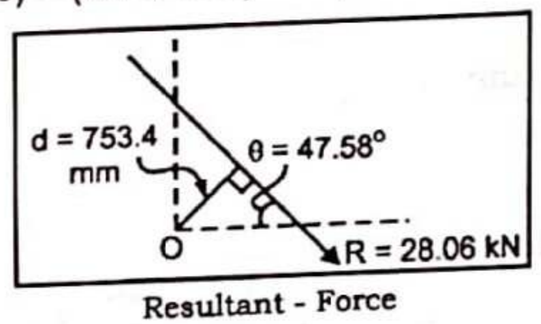

Resultant - Force

Hence Resultant force R = 28.06 kN at $\theta = 47.58° \searrow$ lies at a $\perp$ distance d = 753.4 mm to the right of O. ..... **Ans.**

Ex. 2.23 A force of 300 N acts at A on a bracket as shown. Determine an equivalent force and couple at C.

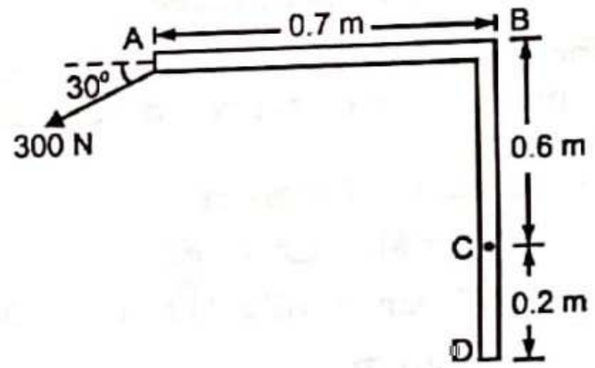

Solution: This problem involves shifting the 300 N force to a new parallel location at C. This shifting of the 300 N force from A to C will require introducing a couple in the system.

This couple M = Moment of 300 N force @ C

M = + (300 cos 30 × 0.6) + (300 sin 30 × 0.7)

M = 260.9 Nm

or M = 260.9 Nm $\circlearrowleft$

Hence the given force at A is equivalent to a force couple system at C whose value is F = 300 N, $\theta = 30° \swarrow$ and M = 260.9 Nm $\circlearrowleft$ ..... **Ans.**

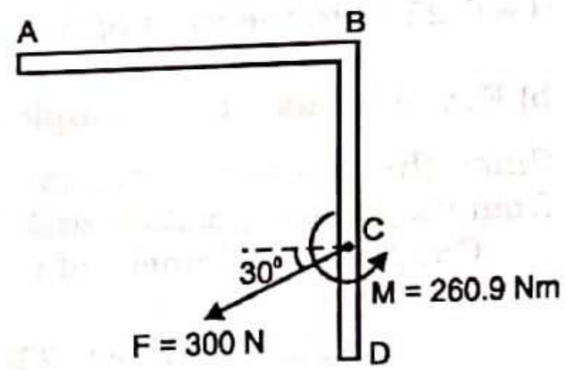

Ex. 2.24 a) Determine the resultant of the system and obtain its location w.r.t. A

b) Replace the system of forces and couple by a force couple system at A.

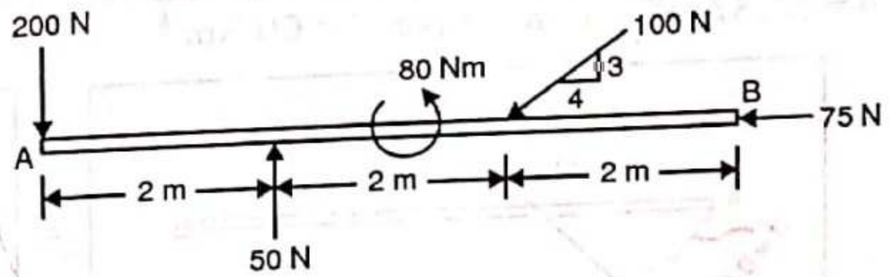

θ =

Solution: a) This is a general system of four forces and one couple.

$\Sigma F_x \rightarrow$ + ve

$= -100 \cos 36.87 - 75 = -155$ N

$= 155$ N $\leftarrow$

$\Sigma F_y \uparrow$ + ve

$= -200 + 50 - 100 \sin 36.87 = -210$ N

$= 210$ N $\downarrow$

Using $R = \sqrt{(\Sigma F_X)^2 + (\Sigma F_Y)^2} = \sqrt{155^2 + 210^2}$

$= 261$ N

Also $\tan\theta = \dfrac{\Sigma F_Y}{\Sigma F_X} = \dfrac{210}{155}$ $\therefore$ $\theta = 53.57°$

$\therefore$ R = 261 N at $\theta = 53.57°$ $\swarrow$

Location of resultant force.

Let the resultant force R be located at perpendicular distance d to the right of A.

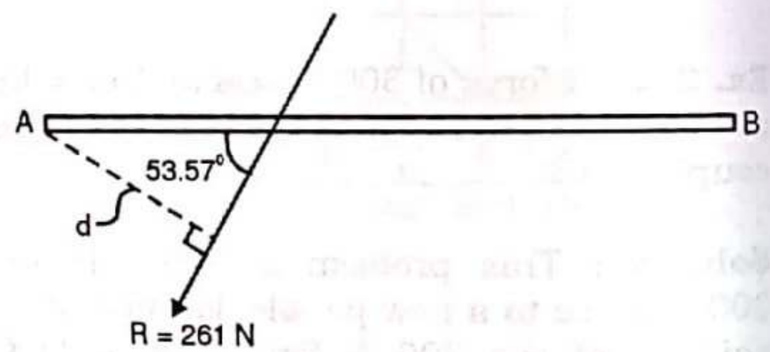

Using Varignon's Theorem

$\Sigma M_A^F = M_A^R$ $\circlearrowleft$ + ve

$(50 \times 2) - (100 \sin 36.87 \times 4) + 80 = -(261 \times d)$

$\therefore$ $d = 0.23$ m

Hence Resultant of the given general system is a force R located at a $\perp$ distance d = 0.23 m to the right of A. ..... **Ans.**

b) Resultant as a force couple system at A

Since the resultant force is desired to be located at A, we need to shift the resultant from its present position to A. This will require introducing a couple M in the system.

Couple M = Moment of resultant R @ A

$= R \times d$

$= -(261 \times 0.23)$

$= -60$ Nm

$= 60$ Nm $\circlearrowleft$

Hence the given system can also be replaced at A by a single force R = 261 N at $\theta = 53.57°$ $\swarrow$ and a couple M = 60 Nm $\circlearrowleft$ ..... **Ans.**

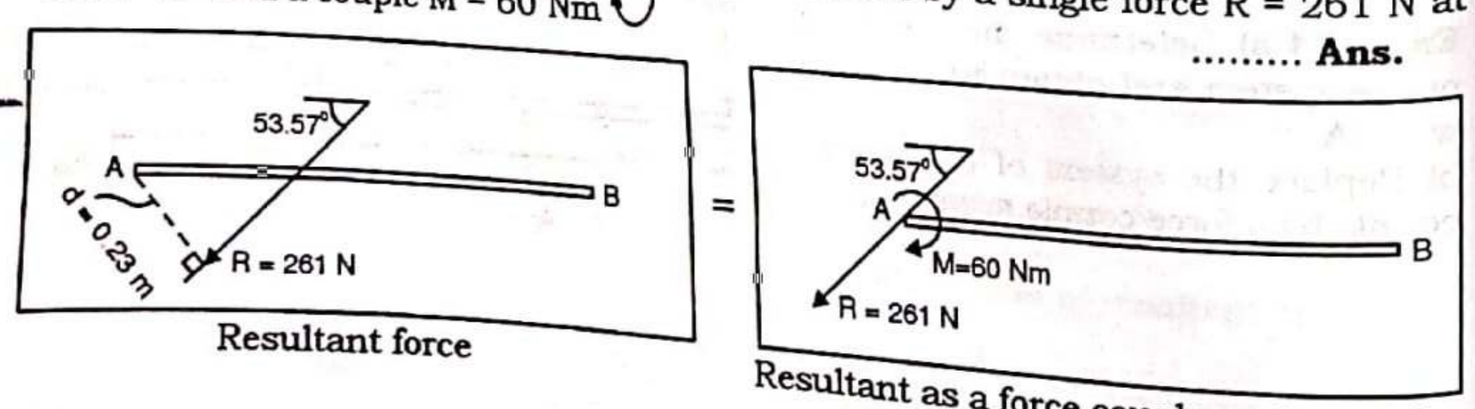

Resultant force

Resultant as a force couple system at A

Exercise 2.3

P1. Determine the resultant and its distance from origin of the given non-concurrent force system. ***(NMIMS May 17)***

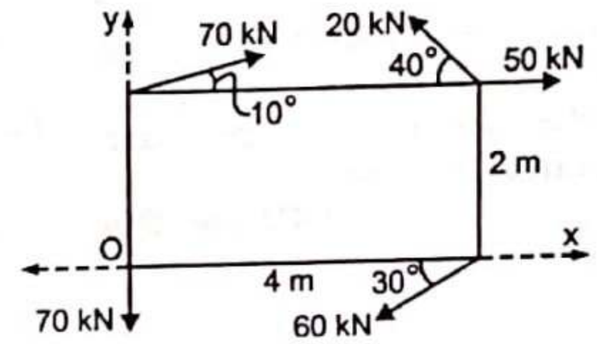

P2. Determine the resultant of the given force system. Also find out where the resultant force will meet arm AB. Take A as the origin. ***(SPCE Dec 10)***

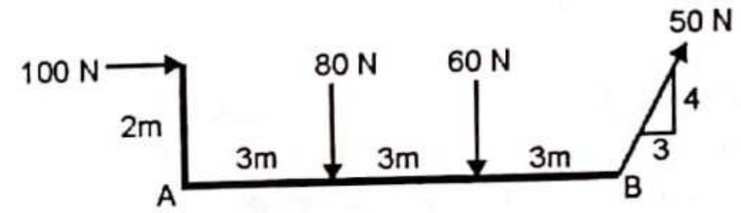

P3. a) A system of forces acting on a bell crank lever is as shown. Determine the magnitude, direction and the point of application of the resultant w.r.t 'O'.

b) Also find the location of the resultant on the horizontal arm of the lever. ***(MU Dec 08, May 14)***

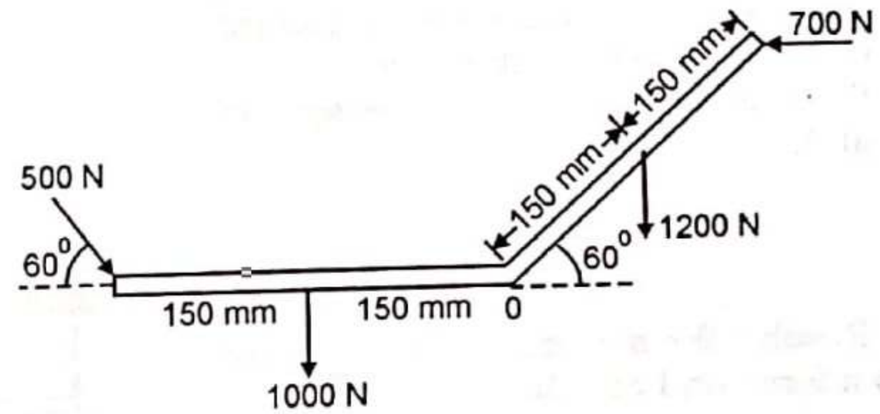

P4. Find the resultant of the system of coplanar forces shown in figure. ***(VJTI May 08)***

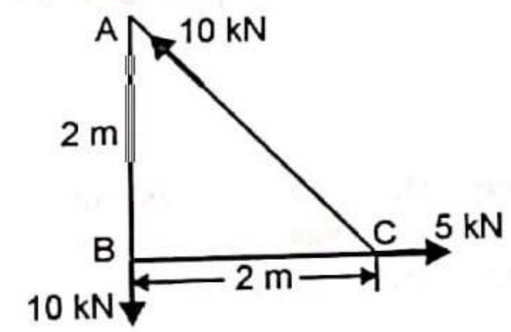

P5. a) A block ABCD of 100 cm × 40 cm dimensions is acted upon by four forces as shown. Calculate the resultant and then state its position with reference to A.

b) Also find the location x where the resultant force cuts the base AD.

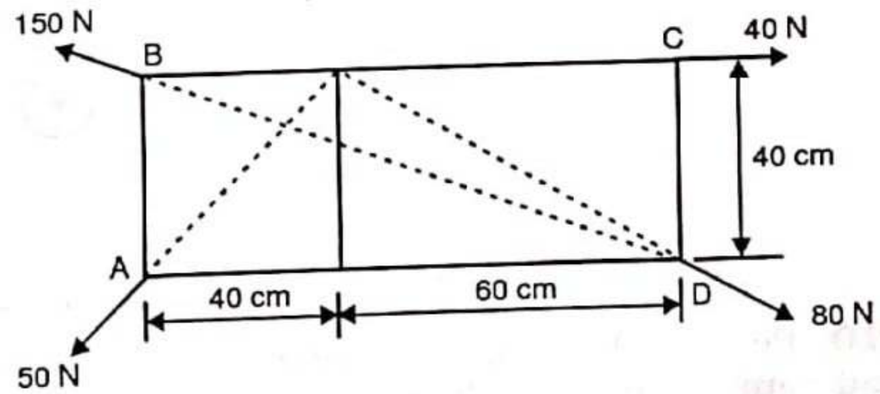

P6. Determine the resultant of the system of forces shown in figure. Locate the point where the resultant cuts the base AB.

(MU Dec 09)

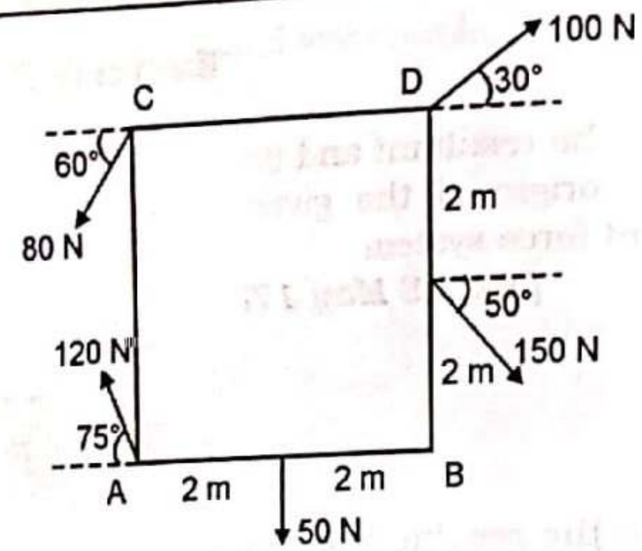

P7. Three forces 1 kN, 3 kN and 2.5 kN act on a vertical pole 6 m high.

a. Find the magnitude, direction and position of resultant w.r.t A

b. The position where the resultant cuts the pole from the base

c. Reduce it to a force couple system at A.

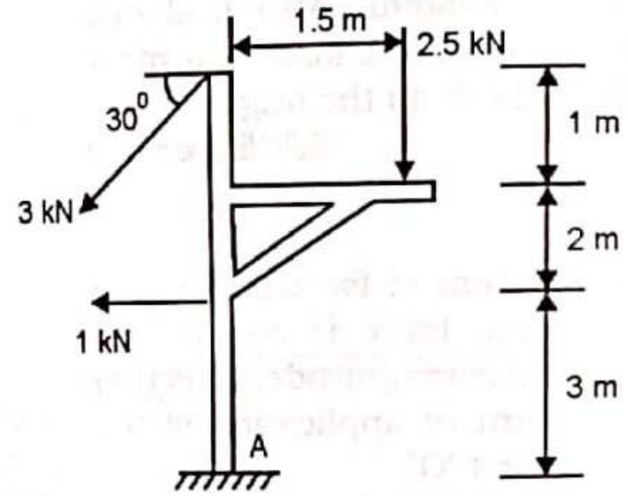

P8. Resolve the system of forces shown into a force and couple at point 'A'.

(MU Dec 07)

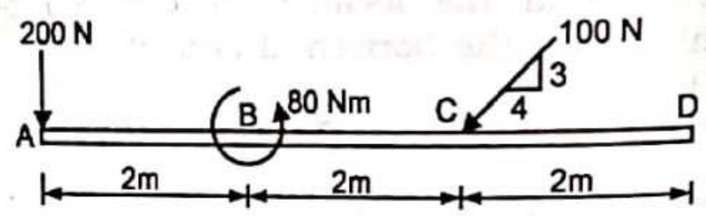

P9. Replace the force system shown by a single force acting at the origin and couple.

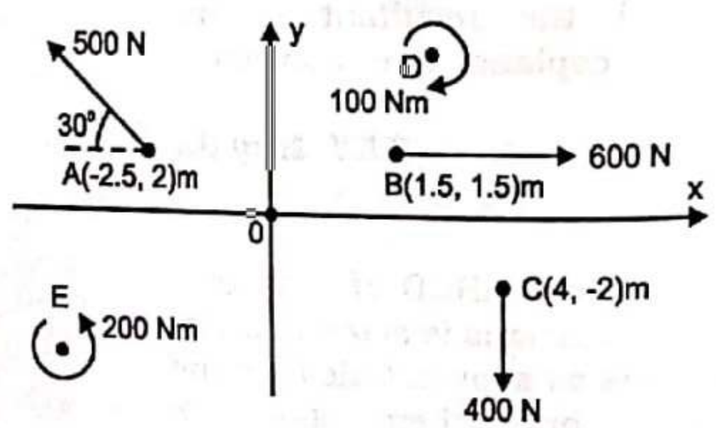

P10. Replace the system of forces and couples by a single force and locate the point on the x-axis through which the line of action of the resultant passes.

(MU Dec 12)

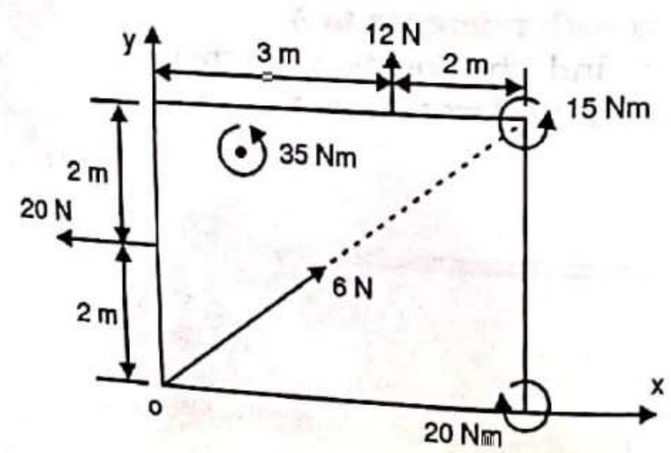

P11. Replace the loading on the frame by a force and moment at point A.

(MU May 09)

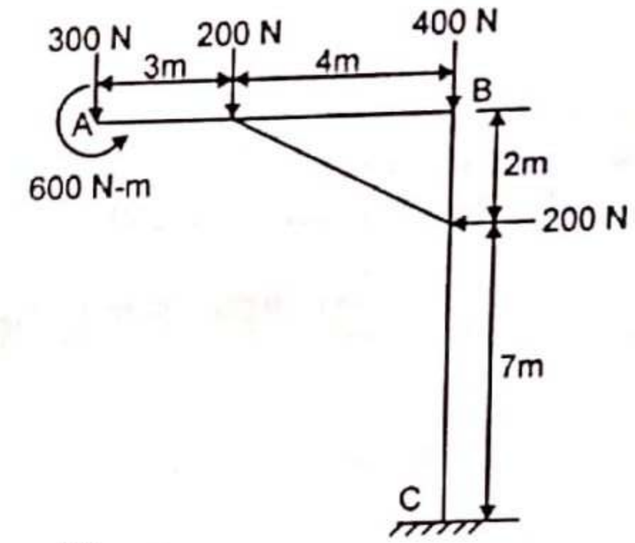

P12. Determine the resultant of the given coplanar system of forces and a couple. Also locate the resultant on the x axis w.r.t. the origin.

b) Reduce the system to a force couple system at O.

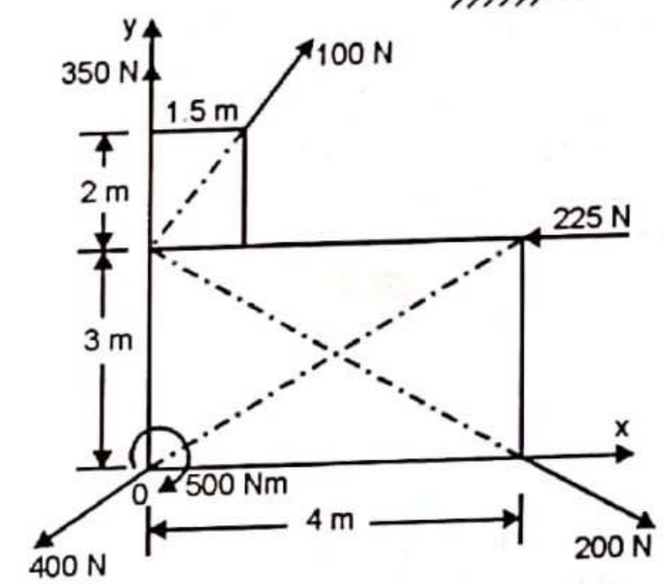

P13. A bracket is subjected to a coplanar force system as shown consisting of three forces and a couple. If the resultant force of the system is to pass through B, determine the value of the couple M which should be applied at D.

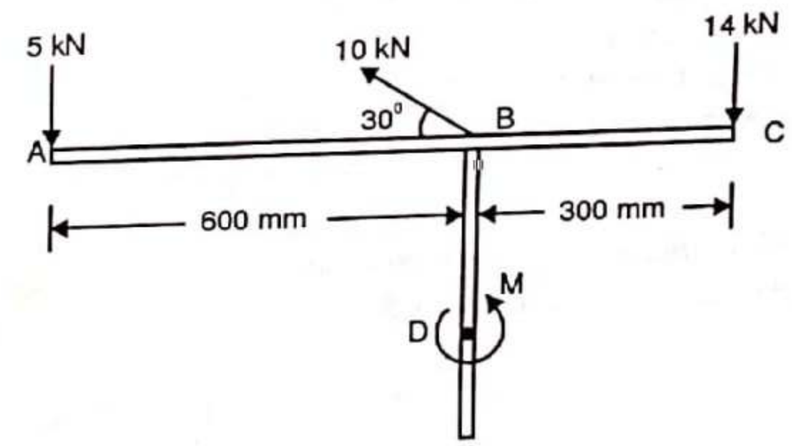

P14. For given system find resultant and its point of application with respect to point O on the x axis (x intercept).

(MU Dec 14)

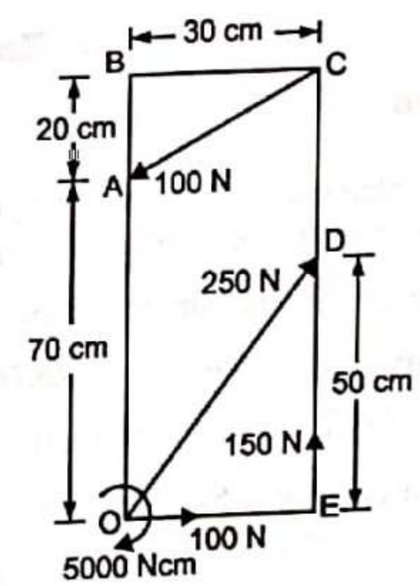

P15. Four forces and a couple are acting on a plate as shown in figure. Determine the resultant force and locate it with respect to point A.
(MU Dec 15, KJS Dec 17)

Note: Convert mm unit to m unit since couple is in Nm

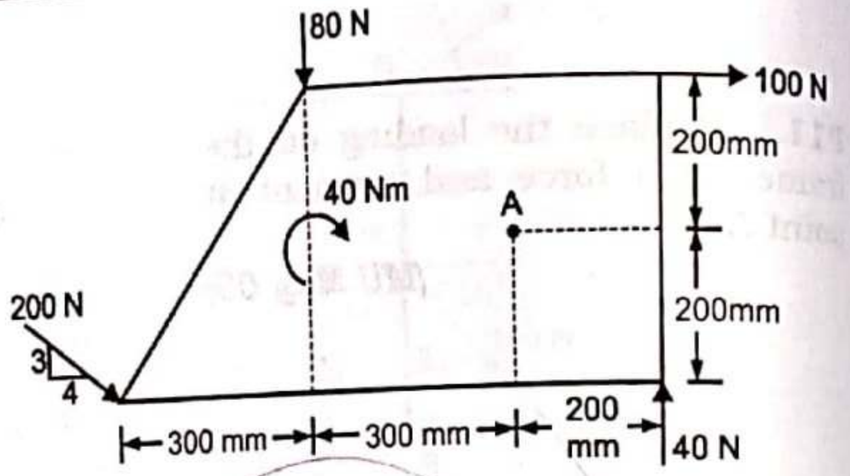

P16. A square lamina is subjected to a force of P_1 = 1580 N as shown in figure. Calculate values of forces P_2 and P_3 such that the resultant of system of forces will be a horizontal force at point E.
(KJS Nov 15)

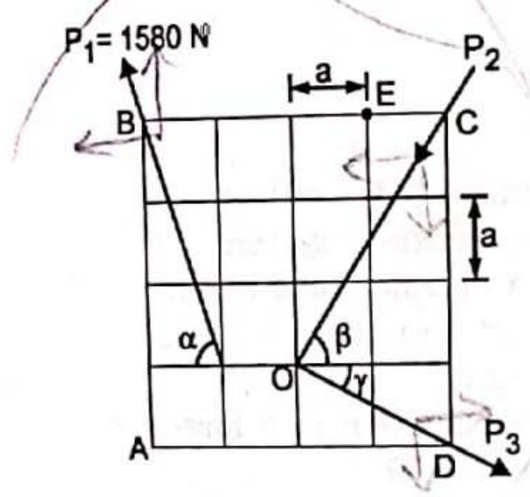

P17. A machine part is subjected to forces as shown. Find the resultant of force in magnitude and direction. Also locate the point where resultant cuts the centre line of the bar AB.
(MU Dec 16)

Hint: The two 20 kN forces form a couple of 20 × 1 = 20 kNm

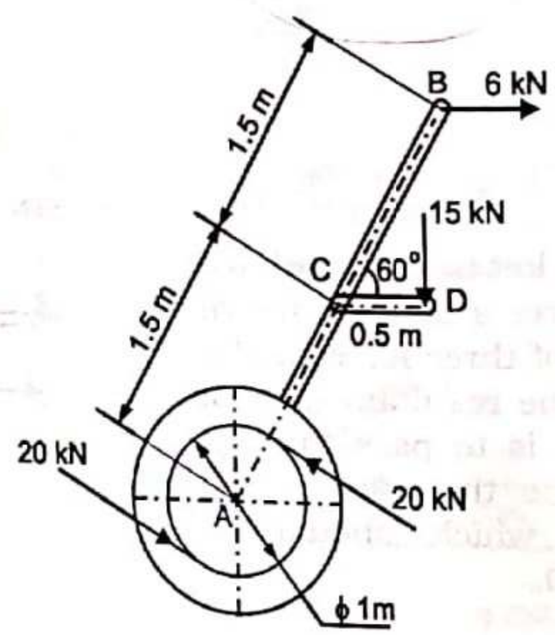

Exercise 2.4

Theory Questions

Q.1 Illustrate the classification of system of forces with neat sketch. Give one example of each. ***(VJTI May 10)***

Q.2 State Varignon's theorem of moments. ***(MU Dec 10, Dec 17, KJS May 17)***

Q.3 Prove Varignon's theorem. ***(MU Dec 17, VJTI Nov 12, KJS May 17)***

Q.4 State "Principle of Transmissibility of Force" ***(MU, VJTI Dec 11, Nov 12, Apr 17)***

Q.5 What is a couple? State its properties. ***(VJTI Nov 09, 12)***

★ ★ ★

Chapter 3

Coplanar Forces: Equilibrium

3.1 Introduction

We have so far studied the three systems of forces and to find the resultant of the system. If the resultant of the force system happens to be zero, the system is said to be in a state of equilibrium. Various practical examples can illustrate the state of equilibrium of a system of forces like:

i) *a lamp hanging from the ceiling is an example of Concurrent Force System in equilibrium.*

ii) *structures like buildings, dams etc. are examples of General Force System in equilibrium.*

iii) *students sitting on a bench is an example of Parallel Force System in equilibrium.*

In this chapter we shall study the *conditions of equilibrium* and applying these conditions with the help of free body diagrams, we shall learn to analyse a system in equilibrium.

3.2 Conditions of Equilibrium (COE)

A body is said to be in equilibrium if it is in a state of rest or uniform motion. This is precisely what Newton has stated in his first law of motion. For a body to be in equilibrium the resultant of the system should be zero. This implies that:

the sum of all forces should be zero i.e. $\Sigma \overline{F} = 0$

and the sum of all moments should also be zero i.e. $\Sigma \overline{M} = 0$

The above two equations are the conditions of equilibrium in vector form.
For a coplanar system of forces, the scalar equations of equilibrium are:

$\Sigma F_x = 0$ ---------- sum of all forces in x direction is zero
$\Sigma F_y = 0$ ---------- sum of all forces in y direction is zero
$\Sigma M = 0$ ---------- sum of moments of all forces is zero

3.3 Free Body Diagram (FBD)

"A diagram formed by isolating the body from its surroundings and then showing all the forces acting on it is known as a Free Body Diagram". Such a diagram is required to be drawn for the body under analysis. For example consider a ladder AB of weight W resting against the smooth vertical wall and

rough horizontal floor. If the ladder is under analysis then the FBD of the ladder shall show the weight W acting through its C.G., the normal reactions N and R_B offered by the floor and the wall respectively and the friction force F at the rough floor.

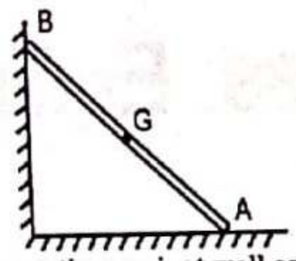

Ladder resting against wall and floor

Fig. 3.1

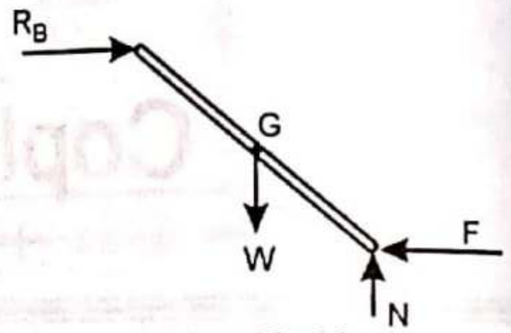

F.B.D. of Ladder

Consider a lamp of weight W, suspended from two strings AB and AC tied to the ceiling. The FBD of the lamp will show the weight W of the lamp and the tensions T_{AB} and T_{AC} in the strings AB and AC respectively.

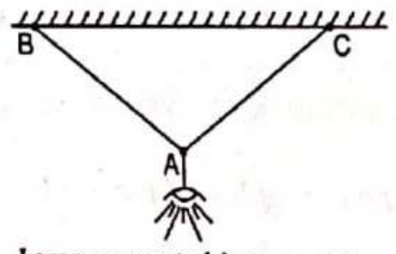

Lamp supported by two strings

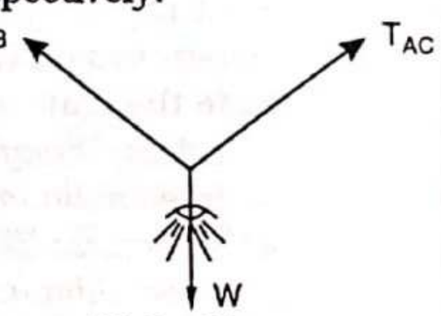

F.B.D. of lamp

Fig. 3.2

Importance of FBD

1. It is the first step in analysis of a body is equilibrium before applying the conditions of equilibrium.
2. It gives a clear picture of the body under analysis, and the effects of all the active and reactive forces and couples acting on it, can be accounted.
3. By including the necessary dimensions in FBD, moments of the forces can be easily taken.

3.4 Types of Supports and Reactions

Whenever a body is supported, the support offers resistance, known as reaction. For example you are sitting on a chair while reading this book. Your weight is being supported by the chair which offers a force of resistance (reaction) upwards. Likewise let us see the different types of supports and the reactions they offer.

1. Hinge Support

A hinge allows free rotation of the body but does not allow the body to have any linear motion. It therefore offers a force reaction which can be split into horizontal and vertical components. Figure shows a body having a hinge support at A. The horizontal component H_A and the vertical component V_A of the support reaction are shown.

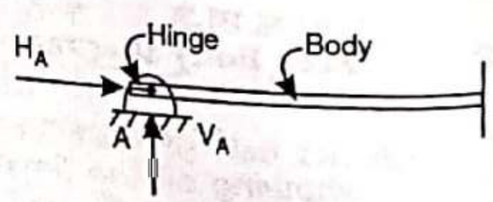

Fig. 3.3 (a)

When two bodies are connected such that the connection allows rotation between them and behaves as a hinge then such a connection is referred to as an *internal hinge* or *pin connection*. For example the two members of a scissor are connected by a pin which allows rotation but allows no linear movement.

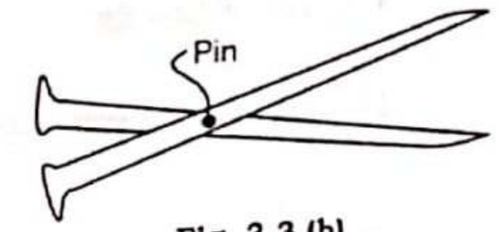

Fig. 3.3 (b)

2. Roller Support

A roller support is free to roll on a surface on which it rests. It offers a force reaction in a direction normal to the surface on which the roller is supported. A roller support may be shown in any of the three symbols as shown in figure 3.4 (c).

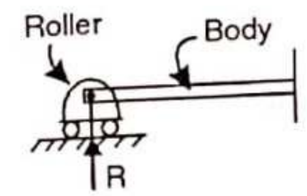

(a) Roller supported on horizontal surface

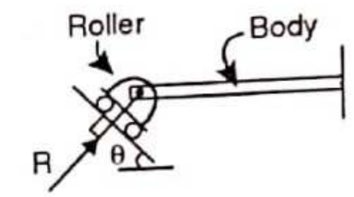

(b) Roller supported on inclined surface

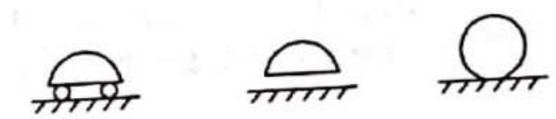

(c) Representation of roller

Fig. 3.4

3. Fixed Support

A fixed support neither allows any linear motion nor allows any rotation. It therefore offers a force reaction which can be split into a horizontal and a vertical component and also a moment reaction. Figure shows a beam having a fixed support at A. In addition to the horizontal component H_A and the vertical component V_A of the force reaction, there is a moment reaction M_A. Such beams with one end fixed and other end free are called as cantilever beams.

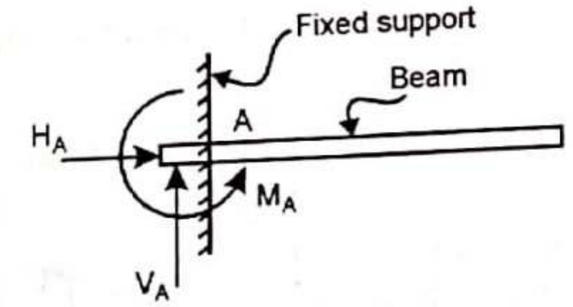

Fig. 3.5

4. Smooth Surface Support

A smooth surface offers a similar reaction as a roller support, i.e. a force reaction normal to the smooth surface. Fig. 3.6 shows a sphere supported between two smooth surfaces. Each surface offers one force reaction, normal to the surface at contact points.

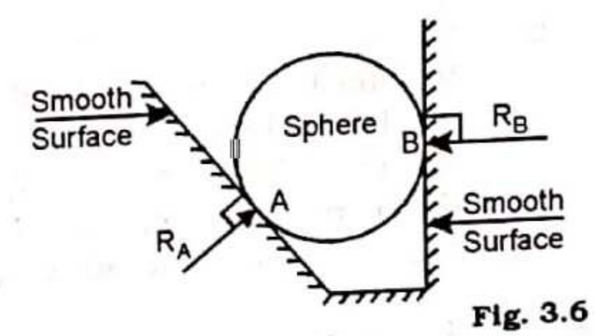

Fig. 3.6

5. Rope/ String/ Cable Support

It offers a pull force in a direction away from the body. This force is commonly referred to as the *tension* force. Fig. 3.7 shows a lamp suspended by two strings, each of them offers a tension force.

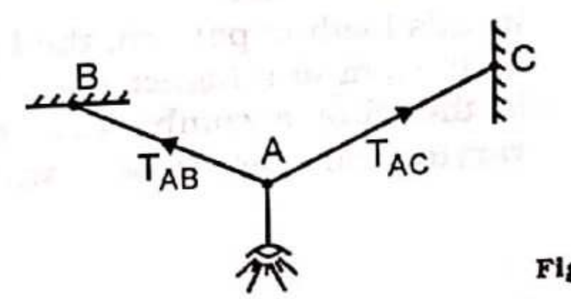

Fig. 3.7

3.5 Types of Loads

The following types of loads can act on bodies.

1. *Point load*
This load is concentrated at a point. Fig. 3.9 shows point loads F_1, F_2, F_3 acting on the beam.

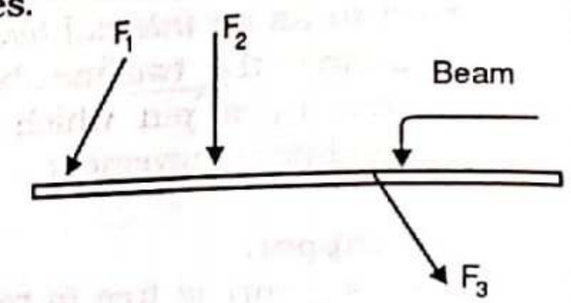

Fig. 3.9

2. *Uniformly distributed load (u.d.l)*
In this loading the load of uniform intensity is spread over a length. u.d.l can be converted into an equivalent point load by multiplying the load intensity with the length. This equivalent point load would act at center of the spread. Fig. 3.10 Shows a u.d.l of intensity w N/m spread over a length AB of L meters. The equivalent point load of w × L would therefore act at L/2 from A.

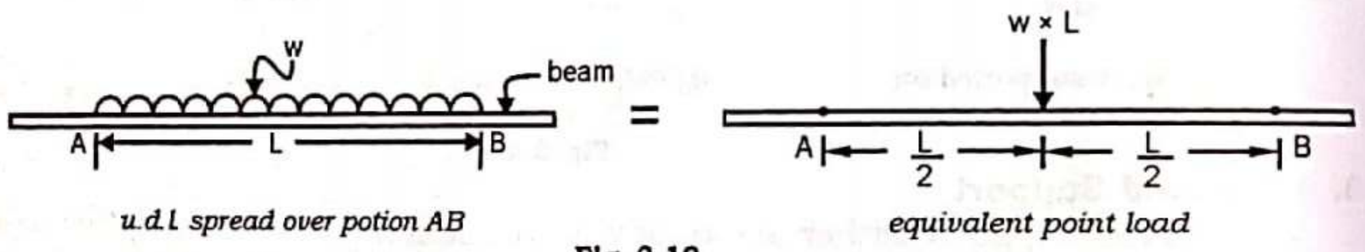

Fig. 3.10

3. *Uniformly varying load. (u.v.l.)*

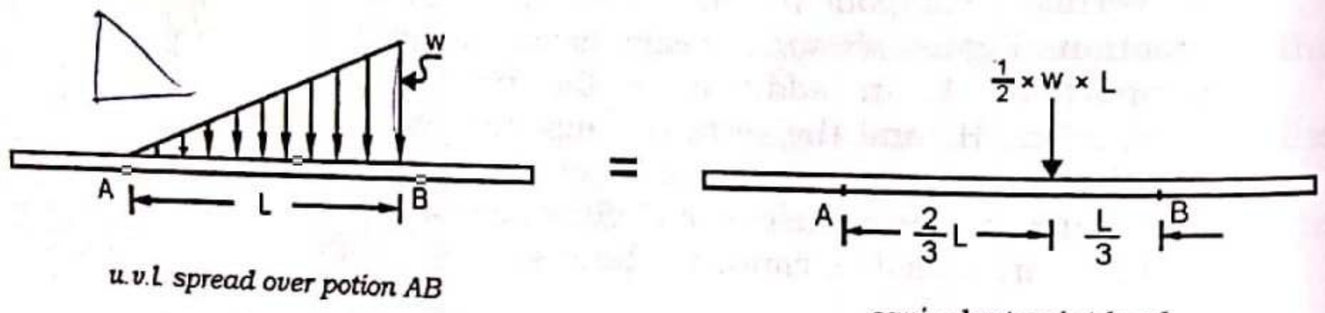

Fig. 3.11

In this loading, the load of uniformly varying intensity is spread over a length. u.v.l. can be converted into an equivalent load, which is equal to the area under the load diagram. The equivalent point load would act at the centroid of the load diagram. Refer Fig. 3.11 which shows a u.v.l. of intensity varying from zero to w N/m over a spread length of L metres.

4. *Trapezoidal load*
In this loading pattern, the load intensity varies uniformly from a lower intensity of w_1 N/m to a higher intensity of w_2 N/m over a span of L metres. This loading is therefore a combination of a u.d.l. of intensity w_1 and a u.v.l of intensity varying from zero to $(w_2 - w_1)$ N/m.

The u.d.l. portion is replaced by a point load of $w_1 \times L$, acting at L/2 from A. The u.v.l. portion is replaced by a point load of acting at L/3 from B. Thus a trapezoidal loading is replaced by two point loads as shown in Fig. 3.12

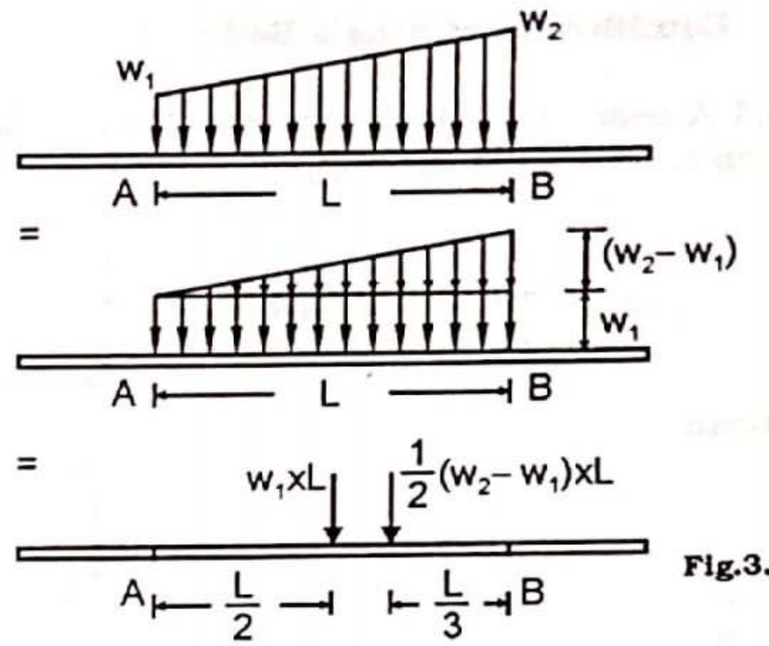

Fig.3.12

5. *Couple load*
We have studied about 'Couple' earlier in article 2.12. A couple load acting on a body tends to cause rotation of the body. A couple load's location on the body is of no significance because couples are free vectors. Figure 3.13 shows a three couples loads M_1, M_2 and M_3 acting on the beam. Couple loads are represented by curved arrows.

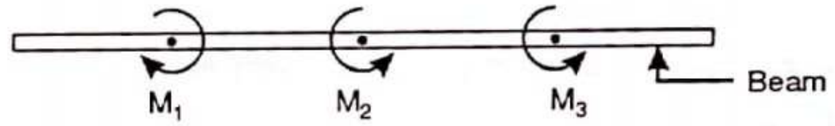

Fig. 3.13

6. *Varying load*
In this loading, the loading intensity varies as some relation. Figure shows a varying distributed load of parabolic nature. The equivalent point load is the area under the curve acting at the C.G. of the area.

Varying load spread over portion AB

Equivalent point load

3.6 Equilibrium of Single Body

Ex. 3.1 A beam AB is hinged at end A and roller supported at end B. It is acted upon by loads as shown. Find the support reactions.

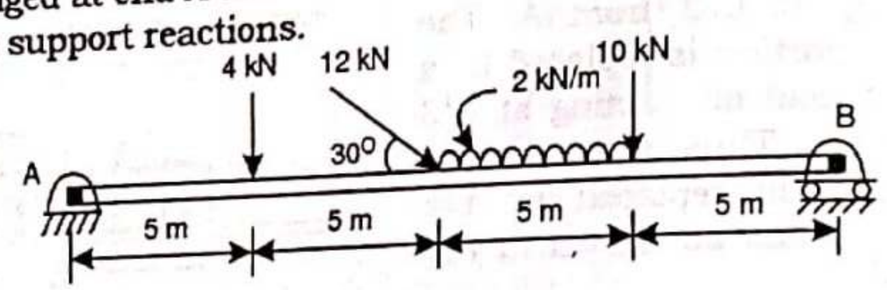

Solution:

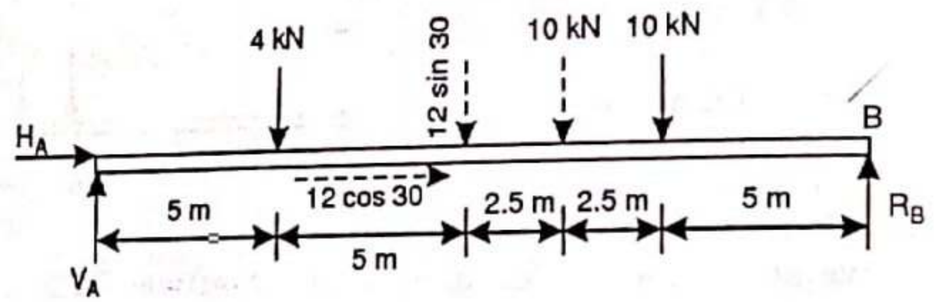

Figure shows the FBD of the beam AB. Hinge at A gives reaction R_A having components H_A and V_A. Roller at B gives a vertical reaction R_B.

The u.d.l has been converted into a point load of 2 kN/m × 5 m = 10 kN acting at the center of u.d.l. The 12 kN inclined load has been resolved into components.

Applying Conditions of Equilibrium (COE) to the beam AB

$\Sigma M_A = 0$ ↺ + ve

$-(4 \times 5) - (12 \sin 30 \times 10) - (10 \times 12.5) - (10 \times 15) + (R_B \times 20) = 0$

$R_B = 17.75$ kN

$R_B = 17.75$ kN ↑ ..... **Ans.**

$\Sigma F_X = 0$ → + ve

$H_A + 12 \cos 30 = 0$

$H_A = -10.39$ kN

$H_A = 10.39$ kN ←

$\Sigma F_Y = 0$ ↑ + ve

$V_A - 4 - 12 \sin 30 - 10 - 10 + 17.75 = 0$

$V_A = 12.25$ kN ↑

Adding vectorially the components H_A and V_A, the reaction

$R_A = 16.06$ kN $\theta = 49.69°$ ↖ ..... **Ans.**

Note : Hinge reaction answers may also be written as $H_A = 10.39$ kN ←, $V_A = 12.25$ kN ↑

Ex. 3.2 The beam AB is loaded by forces and couples as shown. Find the reaction force offered by the supports to keep the system in equilibrium. ***(VJTI Apr 17)***

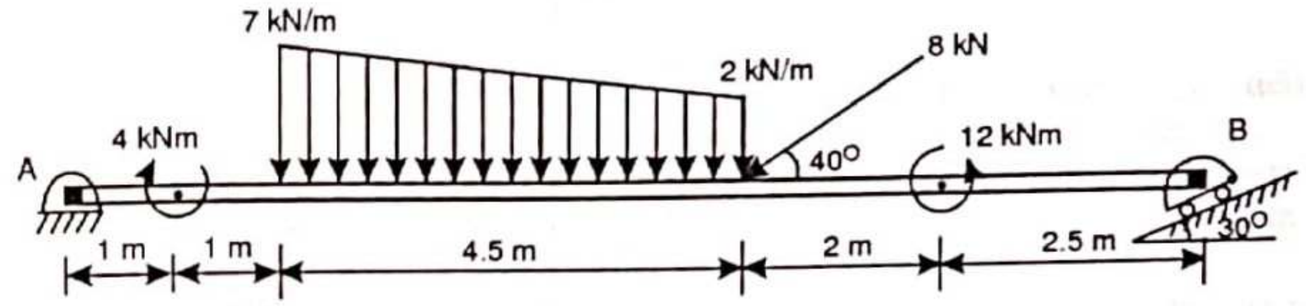

Solution:

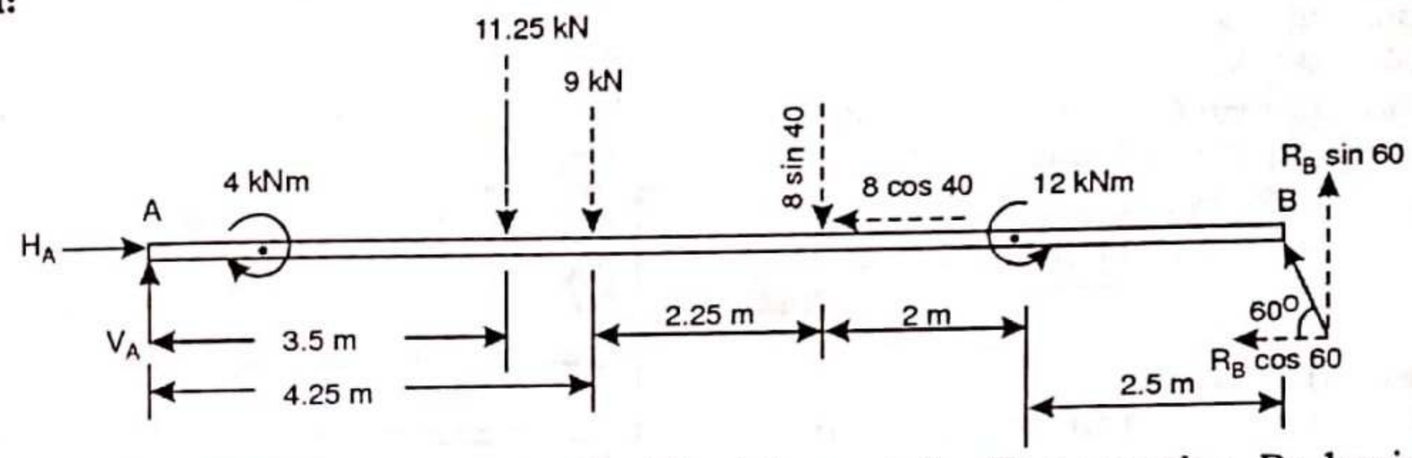

Figure shows the FBD of the beam AB. The hinge at A offers reaction R_A having components H_A and V_A.

The roller at B offers reaction R_B normal to the surface on which the roller is supported.

The trapezoidal load has been replaced by two equivalent point loads.

The inclined 8 kN force has been resolved into components.

The beam is loaded with two couples viz. 4 kNm clockwise and 12 kNm anti-clockwise couples.

Applying COE to the beam AB.

$\Sigma M_A = 0$ ↺ + ve

$-4 - (11.25 \times 3.5) - (9 \times 4.25) - (8 \sin 40 \times 6.5) + 12 + (R_B \sin 60 \times 11) = 0$

$R_B = 10.82$ kN

∴ $R_B = 10.82$ kN $\theta = 60°$ ↖ ..... **Ans.**

$\Sigma F_X = 0$ → + ve

$H_A - 8 \cos 40 - 10.82 \cos 60 = 0$

$H_A = 11.54$ kN

$H_A = 11.54$ kN → ..... **Ans.**

$\Sigma F_Y = 0$ ↑ + ve

$V_A - 11.25 - 9 - 8 \sin 40 + 10.82 \sin 60 = 0$

$V_A = 16.02$ kN

$V_A = 16.02$ kN ↑ ..... **Ans.**

Ex. 3.3 A L shaped beam is loaded as shown. Find support reactions.

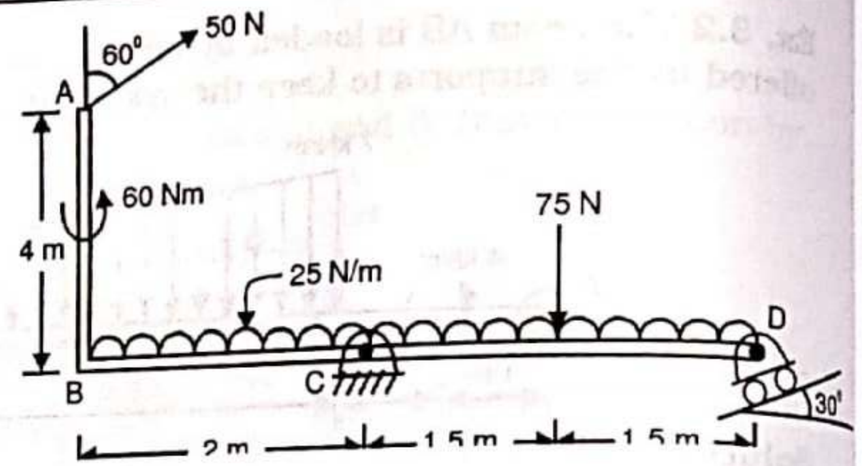

Solution: The system consists of a single L shaped beam externally supported by a hinge at C and a roller at D.

Figure shows the FBD

Applying COE

$\Sigma M_C = 0$ ↺ + ve

$+ 60 - (50 \sin 60 \times 4) - (50 \cos 60 \times 2)$
$- (125 \times 0.5) - (75 \times 1.5)$
$+ (R_D \sin 60 \times 3) = 0$

$\therefore$ $R_D = 130.17$ N, $\theta = 60°$ ↖ ..... **Ans.**

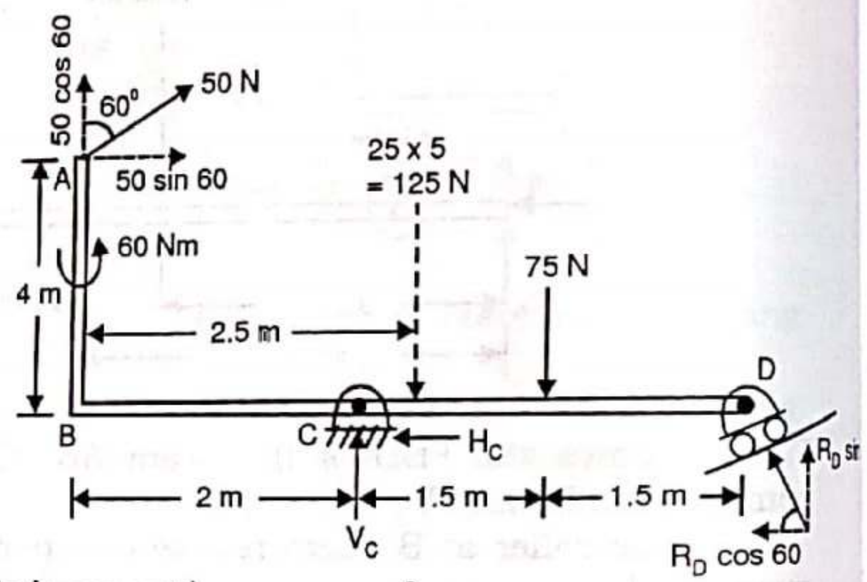

$\Sigma F_X = 0$ → + ve

$50 \sin 60 - H_C - 130.17 \cos 60 = 0$

$\therefore$ $H_C = -21.78$ N

or $H_C = 21.78$ N →

(– ve value indicates assumption about the sense of unknown force is incorrect) ..... **Ans.**

$\Sigma F_Y = 0$ ↑ + ve

$50 \cos 60 + V_C - 125 - 75 + 130.17 \sin 60 = 0$

$\therefore$ $V_C = 62.27$ N

or $V_C = 62.27$ N ↑ (+ ve value indicates assumption about the sense of unknown force is correct) ..... **Ans.**

Ex. 3.4 Find support reaction for a bracket AB fixed to the wall at A.

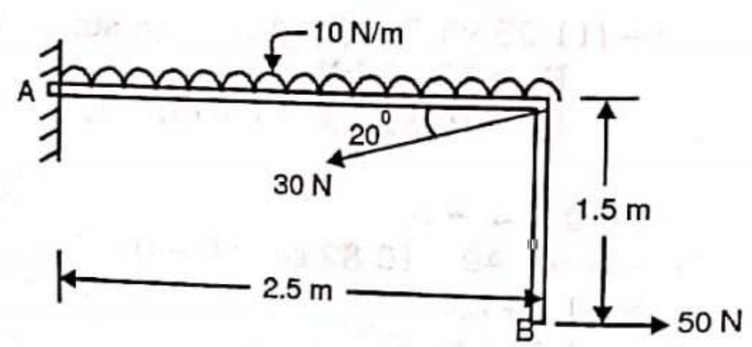

Solution: The system consists of a single body (bracket) externally supported by a fixed support at A.

Figure shows the FBD

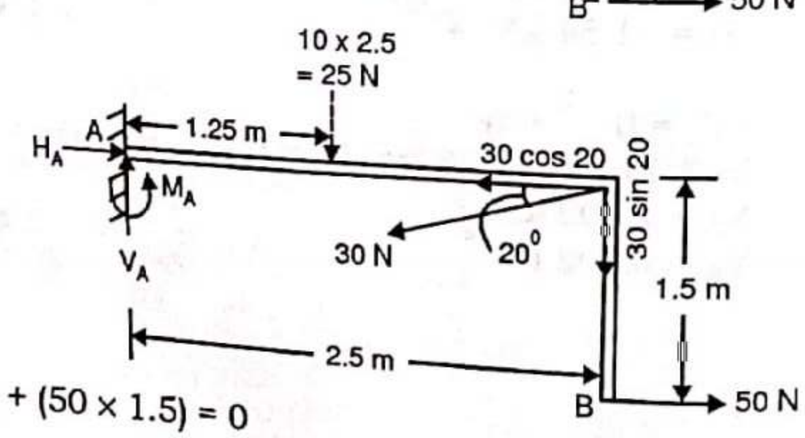

Applying COE

$\Sigma M_A = 0$ ↺ + ve

$+ M_A - (25 \times 1.25) - (30 \sin 20 \times 2.5) + (50 \times 1.5) = 0$

$\therefore$ $M_A = -18.1$ Nm or $M_A = 18.1$ Nm ↻ ..... **Ans.**

$\Sigma F_X = 0$ → + ve

$H_A - 30 \cos 20 + 50 = 0$

$\therefore$ $H_A = -21.81$ N or $H_A = 21.81$ N ← ..... **Ans.**

$\Sigma F_Y = 0$ ↑ + ve

$V_A - 25 - 30 \sin 20 = 0$

$\therefore$ $V_A = 35.26$ N or $V_A = 35.26$ N ↑ ..... **Ans.**

Ex. 3.5 A man of 800 N weight stands on a 10 m long uniform beam ABCD of self weight 2000 N. The beam is supported by hinge at B and a rope whose one end is attached at C and the other end carries a counterweight W_B. Find the value of W_B needed to keep the beam in a horizontal position as shown and also the hinge reactions.

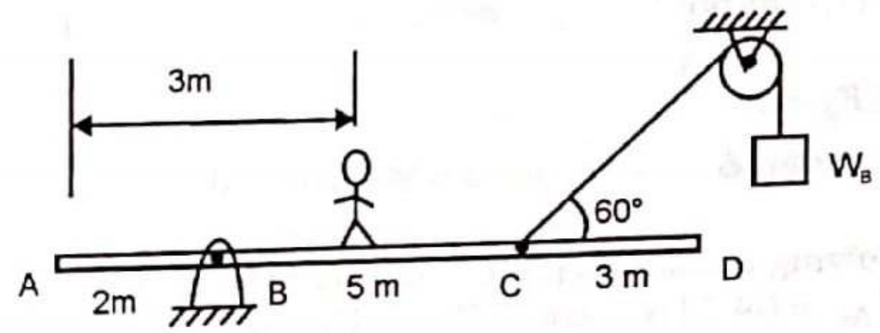

Solution: The beam is supported by a hinge at B giving reactions H_B and V_B as shown and a rope. Since the rope passes over a smooth pulley the tension T in it is equal to the counterweight W_B. The weight 2000 N of the beam acts through its centre of gravity G i.e. its mid point.

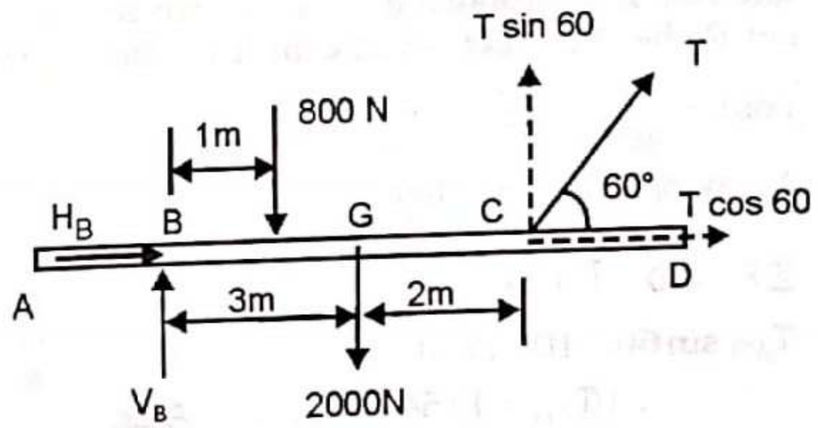

Applying C O E

$\Sigma M_B = 0$ ↺ + ve

$- (800 \times 1) - (2000 \times 3) + (T \sin 60 \times 5) = 0$

$\therefore$ T = 1570.4 N

$\therefore$ $W_B = T = 1570.4$ N ..... **Ans.**

$\Sigma F_x = 0$ → + ve

$H_B + T \cos 60 = 0$

$\therefore$ $H_B = -T \cos 60 = -1570.4 \cos 60$
$= -785.19$

or $H_B = 785.19$ N ← ..... **Ans.**

$\Sigma F_y = 0$ ↑ + ve

$V_B - 800 - 2000 + T \sin 60 = 0$

$\therefore$ $V_B - 2800 + 1570.4 \sin 60 = 0$

$\therefore$ $V_B = 1450$ N

or $V_B = 1450$ N ↑ ..... **Ans.**

Ex. 3.6 A lamp weighing 150 N is supported by two cables AC and BC. Find the force developed in the cables.

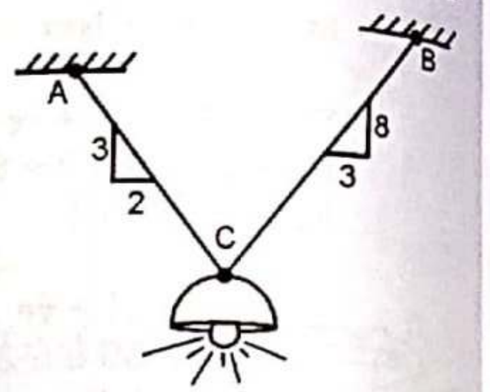

Solution: The lamp is supported by two cables. Let T_{AC} and T_{BC} be the tension force in cables AC and BC. Figure shows the FBD.

$\tan\theta_1 = \frac{3}{2}$ $\therefore$ $\theta_1 = 56.31°$; $\tan\theta_2 = \frac{8}{3}$ $\therefore$ $\theta_2 = 69.44°$

Applying COE to lamp

$\Sigma F_x = 0 \quad \rightarrow +ve$

$-T_{AC}\cos 56.31 + T_{BC}\cos 69.44 = 0$ ..... (1)

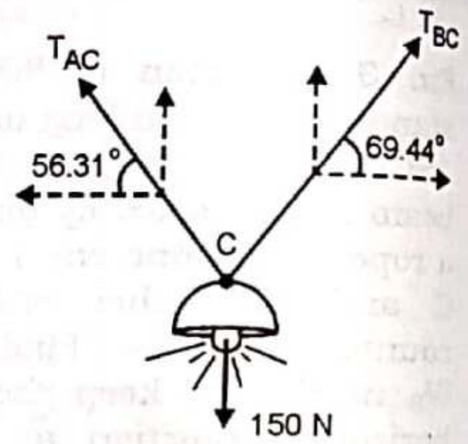

$\Sigma F_y = 0$

$T_{AC}\sin 56.31 + T_{BC}\sin 69.44 - 150 = 0$ ..... (2)

Solving equations (1) and (2), we get

$T_{AC} = 64.91 N$ and $T_{BC} = 102.52 N$ ..... **Ans.**

Ex. 3.7 A circular roller of weight 1000 N and radius 20 cm hangs by a rope AB of length 40 cm and rests against a smooth vertical wall at C as shown. Determine the tension in the rope and reaction at C.

(MU. May 13)

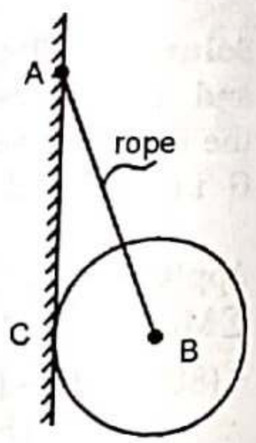

Solution

The roller is supported by a smooth surface at C and a rope AB. Let R_C be the reaction at C and T_{AB} be the tension in the rope.

$\cos\theta = \frac{20}{40}$ $\therefore$ $\theta = 60°$

Applying COE to roller

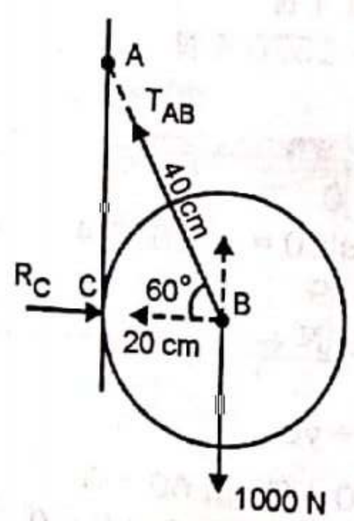

$\Sigma F_y = 0 \quad \uparrow +ve$

$T_{AB}\sin 60 - 1000 = 0$

$\therefore$ $T_{AB} = 1154.7 N$ ..... **Ans.**

$\Sigma F_x = 0 \quad \rightarrow +ve$

$R_C - T_{AB}\cos 60 = 0$

$\therefore$ $R_C - 1154.7\cos 60 = 0$

or $R_C = 577.35 N \rightarrow$ ..... **Ans.**

Ex. 3.8 A cylinder of 1500 N weight is resting in an unsymmetrical smooth grove as shown in figure. Determine the reactions at the points of contacts.

(MU. May 14)

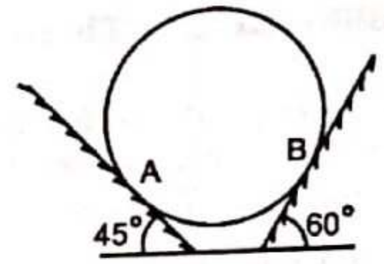

Solution: The cylinder is in equilibrium. It is supported by two smooth surfaces at A and B. The FBD is shown.

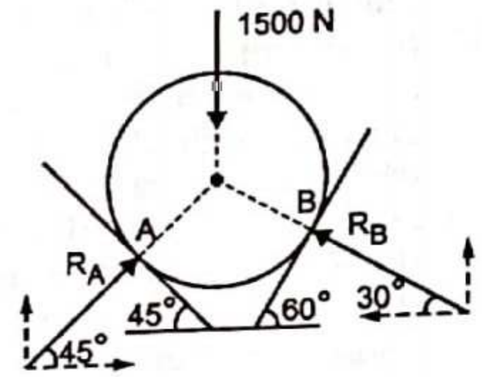

COE – Sphere

$\Sigma F_x = 0 \quad \rightarrow +ve$

$R_A\cos 45 - R_B\cos 30 = 0$ ..... (1)

$\Sigma F_y = 0 \quad \uparrow +ve$

$R_A\sin 45 + R_B\sin 30 - 1500 = 0$ ..... (2)

Solving equations (1) and (2), we get

$R_A = 1344.9 N$, $\theta = 45°$ ↗ .....**Ans.**

and $R_B = 1098.1 N$, $\theta = 30°$ ↖ .....**Ans.**

3.7 Equilibrium of a Two Force Body

The concept of two forced body states that "*If only two forces act on a member and the member is in equilibrium then the two forces would be of equal magnitude, opposite in direction and collinear*".

Members in equilibrium and subjected to two forces are referred to as *two force members* and their identification is useful in the solution of equilibrium problems.

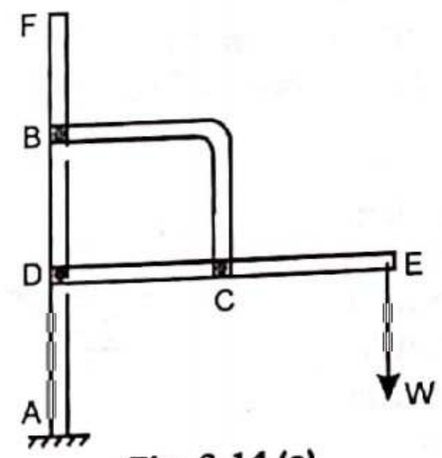

Fig. 3.14 (a)

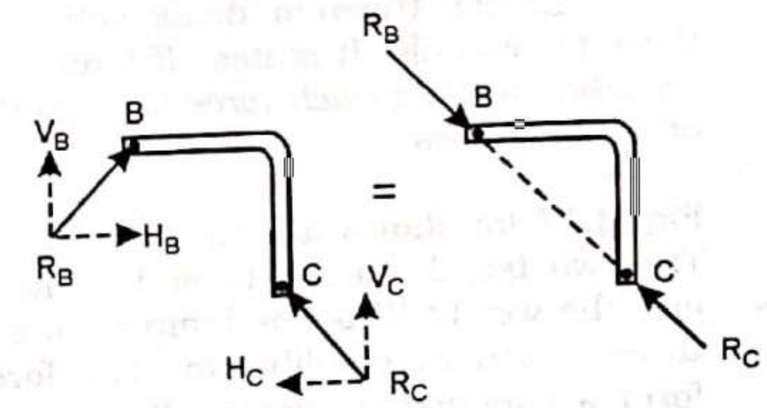

Fig. 3.14 (b)

Fig. 3.14 (a) shows a frame consisting of three members AF, BC and DE. Member BC is isolated and shown in Fig. 3.14 (b). Let R_B and R_C be the pin reactions at B and C respectively. Since only two forces act on member BC, it is a two force member. Therefore $R_B = R_C$ in magnitude, opposite in direction and are collinear (i.e. both are directed along line BC)

3.8 Equilibrium of a Three Force Body.

The concept of equilibrium of three force body states "*If three coplanar forces act on a member and the member is in equilibrium, then the forces would be either Concurrent or Parallel*".

Fig. 3.15 (a) shows a uniform rod AB of weight W, one end of which is resting against a smooth vertical wall, while the other end is supported by a string. The member AB is acted upon by three forces viz., a horizontal reaction R_A at A, the self weight W acts through the C.G. of the rod, while the tension T in the string acts at B. These three forces keep the rod in equilibrium and as per the concept of three force body, should therefore be concurrent. Refer Fig. 3.15 (b).

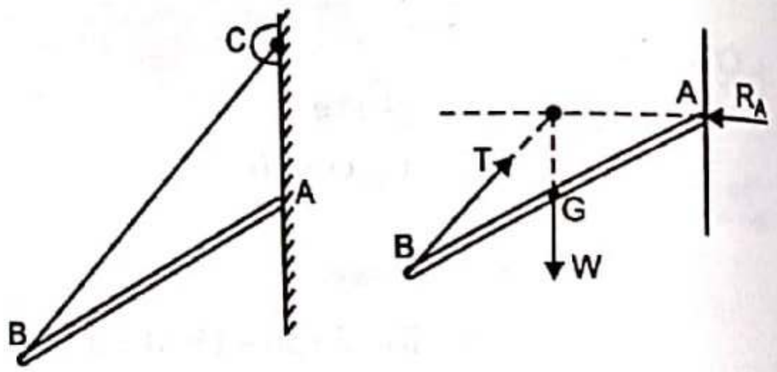

Fig. 3.15 (a) Fig. 3.15 (b)

Fig. 3.16 (a) shows a beam AB which is hinge supported at A and roller supported at B. Let a vertical load P be applied on the beam at C. We know that the reaction R_B would be vertical. Since the beam is in equilibrium, hinge reaction R_A would also be a vertical force. This is therefore a case of three parallel forces in equilibrium. Refer Fig. 3.16 (b).

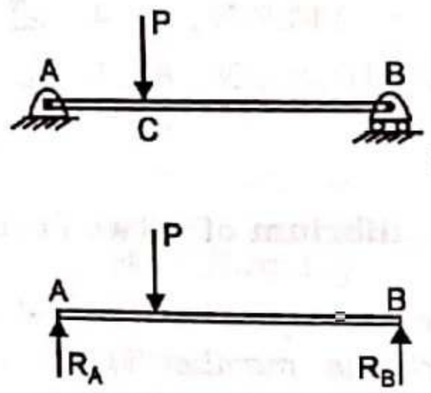

Fig. 3.16 (a)

Fig. 3.16 (b)

3.9 Lami's Theorem

Lami's theorem deals with a particular case of equilibrium involving three forces only. It states "*If three concurrent forces act on a body keeping it in equilibrium, then each force is proportional to the sine of the angle between the other two forces*".

Fig. 3.17 (a) shows a lamp held by two cables. The two tensile forces T_1 and T_2 in the string and the weight W of the lamp form a system of three forces in equilibrium. The forces would form a concurrent system. If α is the angle between T_2 and W, β is the angle between T_1 and W and θ is the angle between T_1 and T_2 then according to Lami's theorem

$$\frac{T_1}{\sin\alpha} = \frac{T_2}{\sin\beta} = \frac{W}{\sin\theta}$$

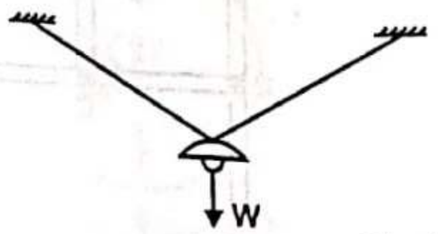

Fig. 3.17 (a)

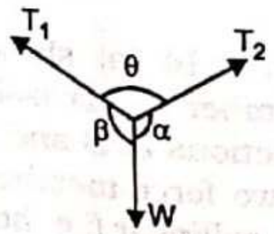

Fig. 3.17 (b)

or in general for a system of three forces P, Q and R as shown in Fig. 3.17 (c) we write Lami's equation as

$$\frac{P}{\sin\alpha} = \frac{Q}{\sin\beta} = \frac{R}{\sin\theta}$$

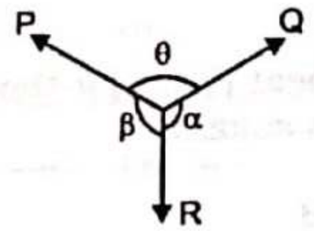

Fig. 3.17 (c)

Note that while using Lami's theorem, the three concurrent forces should either act towards the point of concurrence or act away from it. If this is not the case then using the principle of transmissibility they can be made in required form. Fig. 3.18 (a) shows such a case for a sphere resting against smooth surfaces. The reactions R_A and R_B act ⊥ to smooth surfaces. To apply Lami's equation the forces have been arranged acting away from the point of concurrence as shown in Fig. 3.18 (b).

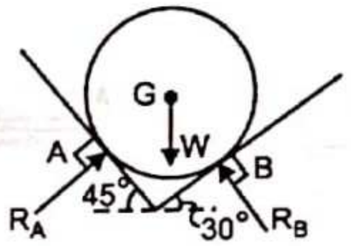

Fig. 3.18 (a)

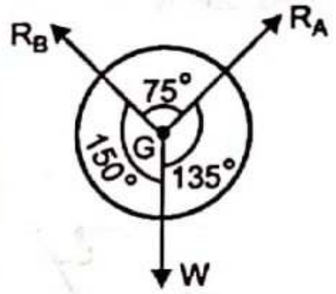

Fig. 3.18 (a)

Now applying Lami's Theorem

$$\frac{R_A}{\sin 150} = \frac{R_B}{\sin 135} = \frac{W}{\sin 75}$$

Knowing W, we can find R_A and R_B.

Proof of Lami's Theorem: Let P, Q and R be the three concurrent forces in equilibrium as shown in Fig. 3.19 (a).

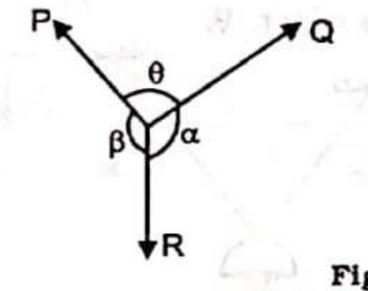

Fig. 3.19 (a)

Since the forces are vectors they are added vectorially by head and tail connections. We get a closed triangular polygon as shown in Fig. 3.19 (b).

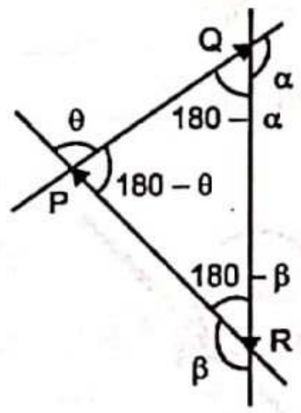

Fig. 3.19 (b)

Applying sine rule we get

$$\frac{P}{\sin(180-\alpha)} = \frac{Q}{\sin(180-\beta)} = \frac{R}{\sin(180-\theta)}$$

$$\therefore \quad \frac{P}{\sin\alpha} = \frac{Q}{\sin\beta} = \frac{R}{\sin\theta} \quad \text{..... proved}$$

3.10 Equilibrant Force

An unbalanced force system can be brought to equilibrium by adding an Equilibrant force in the system. The equilibrant force has magnitude, direction and point of application as of the resultant of the system but has a sense opposite to that of the Resultant.

To find the Equilibrant of a force system we first find magnitude, direction and location of the Resultant of the force system. The Equilibrant of the force system shall therefore be a force of the same magnitude, direction and location as of the resultant but having an opposite sense to that of the Resultant.

Exercise 3.1

P1. Draw neat FBDs for the following supported bodies in equilibrium. Take all plane surfaces as smooth.

a) Beam AB

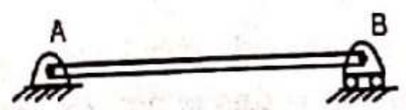

b) Beam AB

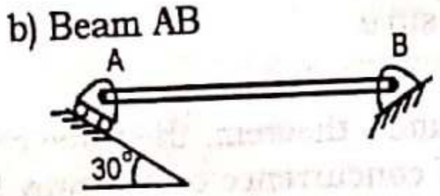

c) Fixed beam AB.

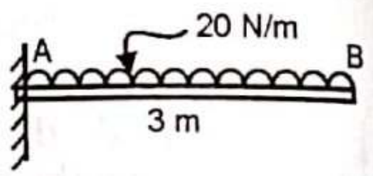

d) Pole AC

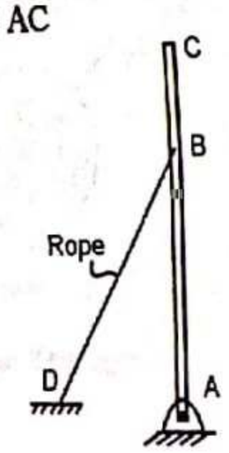

e) Beam AC

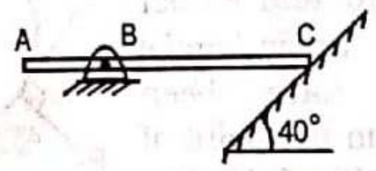

f) Rod AB of wt. W

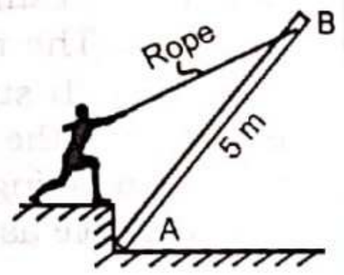

g) Lamp of wt. W

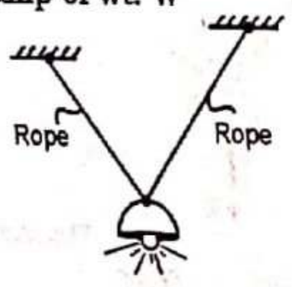

h) Block of wt. W

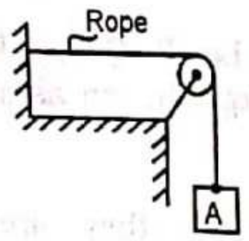

i) Beam AC of wt. W

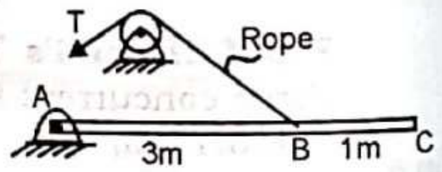

j) Sphere of wt. W

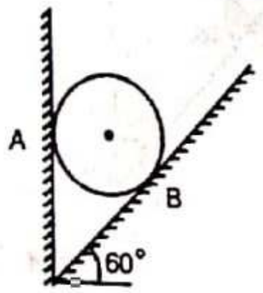

k) Sphere of wt. 500 N

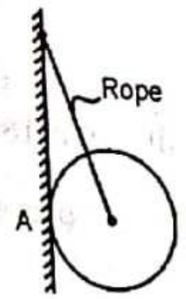

l) Wheel of wt. W.

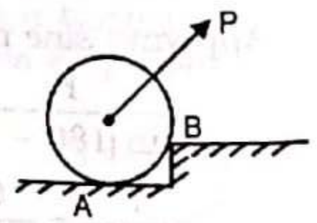

P2. A beam AB is loaded as shown. Find support reactions.

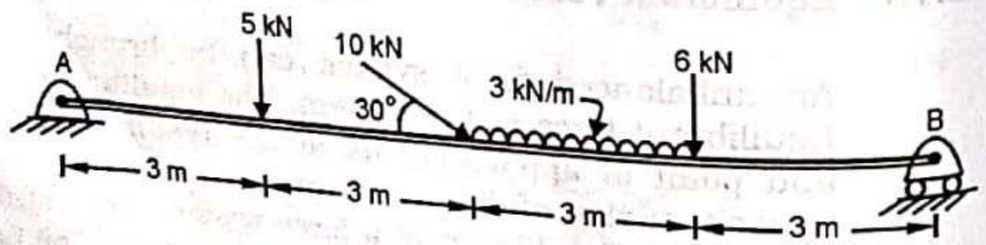

P3. Determine the support reactions for the beam shown in figure.
(KJS May 15, MU Dec 15)

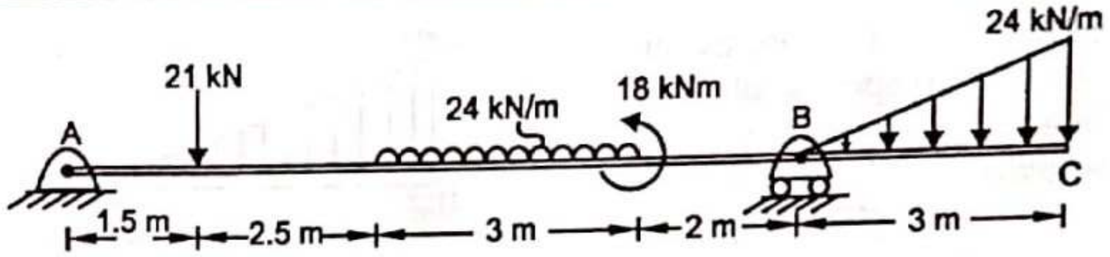

P4. Find analytically the support reaction at B and load P for the beam shown in figure if reaction at support A is zero.
(MU Dec 08, 11)

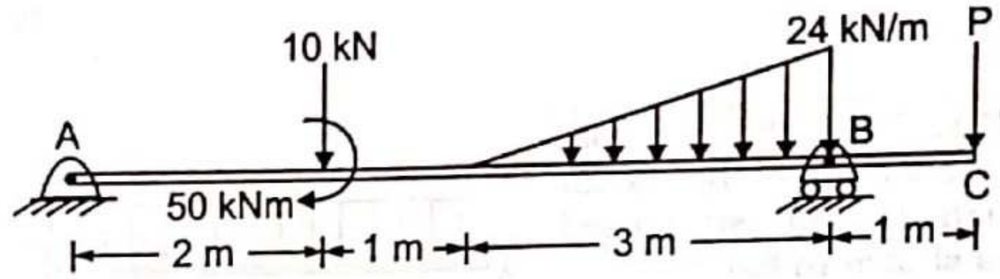

P5. Figure shows beam AB hinged at A and roller supported at B. The L shaped portion DEF is an extended part of beam AB. For the loading shown, find support reactions.
(MU May 13, Dec 16)

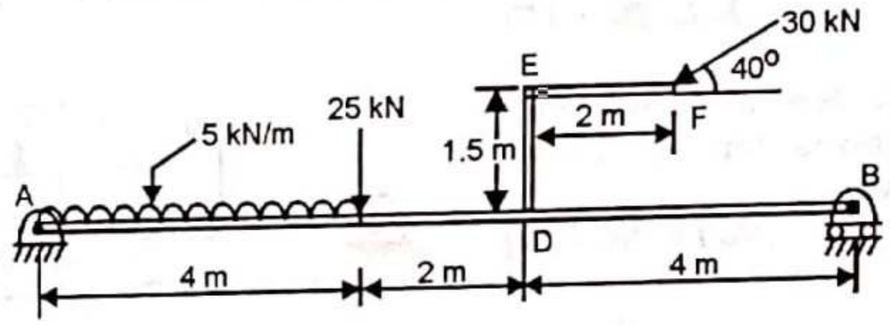

P6. Determine support reactions for the given beam.
(NMIMS May 17)

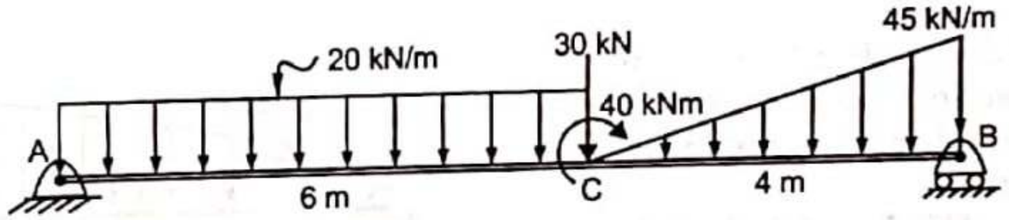

P7. Determine the reactions developed in the cantilever beam as shown in figure.
(VJTI Nov 10)

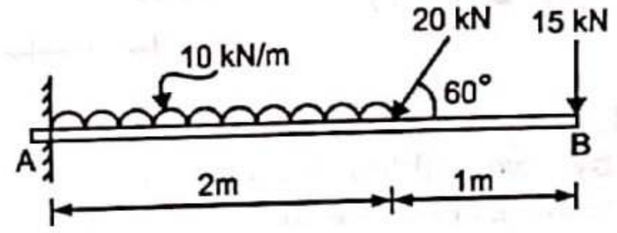

P8. Find the reactions at the supports of the beam loaded as shown in figure.
(MU Dec 09)

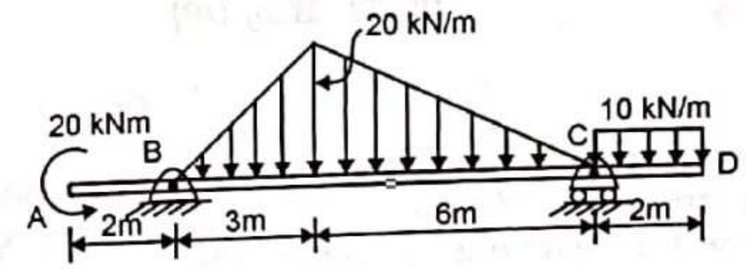

P9. A simply supported beam AB of span 3m, overhanging on both sides is loaded as shown in figure. Find the support reactions.
(VJTI May 10)

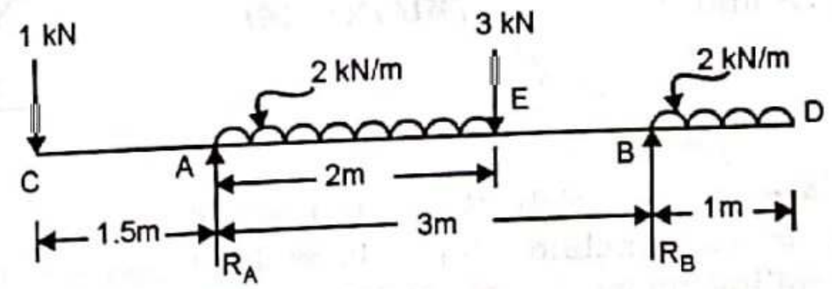

P10. Find the reactions at the supports of the beam AB loaded as shown.

(MU May 11)

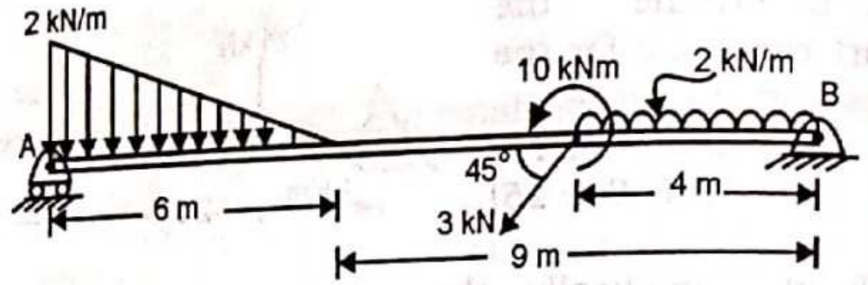

P11. Find the support reactions for the beam loaded and supported as shown in figure.

(MU Dec 12, KJS Dec 17)

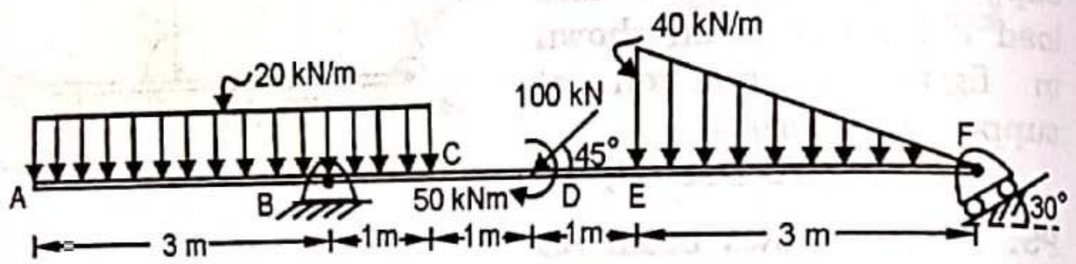

P12. Determine support reactions for the beam shown.

(VJTI Nov 12)

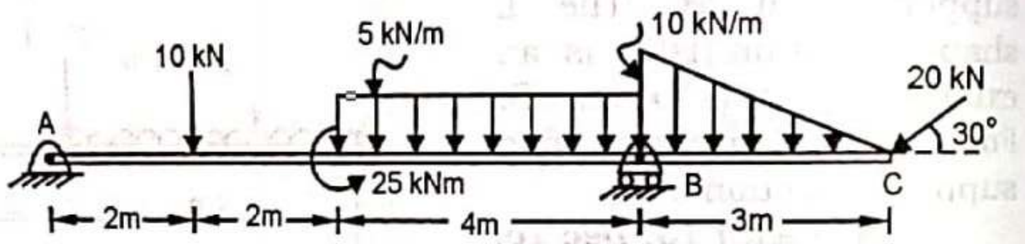

P13. Find support reactions at A and B for the beam shown in figure.

(MU Dec 13, Dec 17)

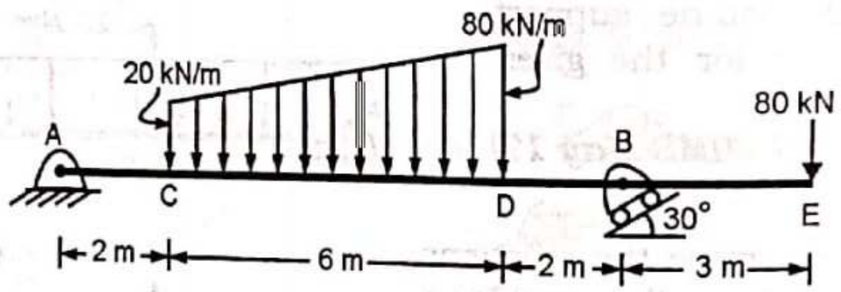

P14. The figure shows a 10 kg lamp supported by two cables AB and AC. Find the tension in each cable

(VJTI May 08)

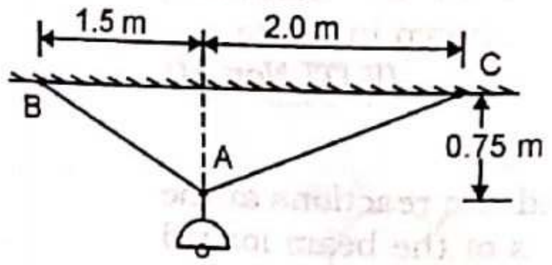

P15. A cylinder of weight 500 N is kept on two inclined planes as shown. Determine the reactions at the contact points A and B.

(MU Dec 14)

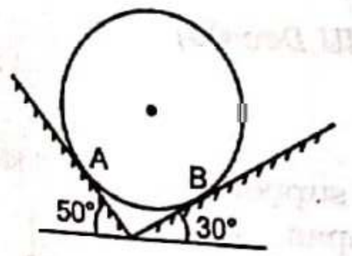

P16. A wheel of weight W = 1000 N rest on a smooth incline plane. It is kept from rolling down the plane by a string AC. Find the tension in the string and reaction at the point of contact D.

(MU Dec 08, VJTI May 10)

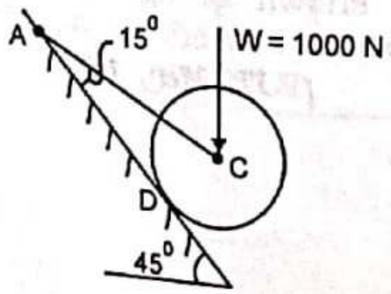

P17. A small boat is held in static by means of three taut ropes OA, OB and OC as shown. The water in the river exerts a force on the boat in the direction of flow.

a) If the tension in OA and OB are 1 kN and 0.6 kN resp., determine the force F, exerted by the flow on the boat and the tension in rope OC.

b) If rope OC breaks, will the boat remain in equilibrium? What is the new tension in ropes OA and OB after OC breaks?

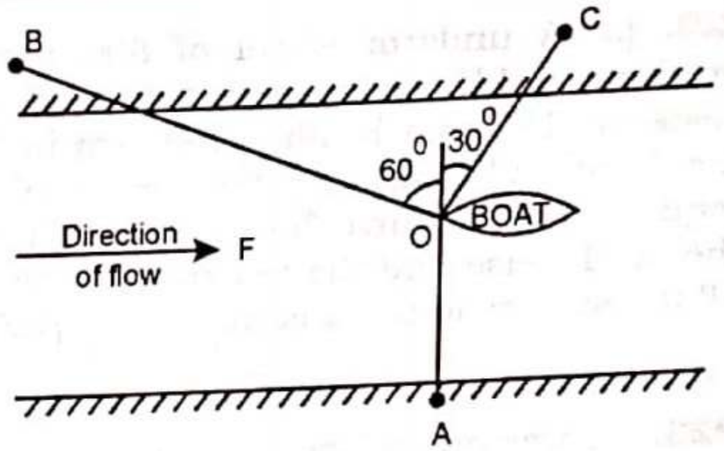

P18. A straight vertical mast 4 m long and self weight of 1200 N is pinned to the ground and stayed by means of a cable at a distance of 3 m from the bottom as shown. If a horizontal force of 5 kN acts at the top, determine the tension in the cable and reaction at the hinge.

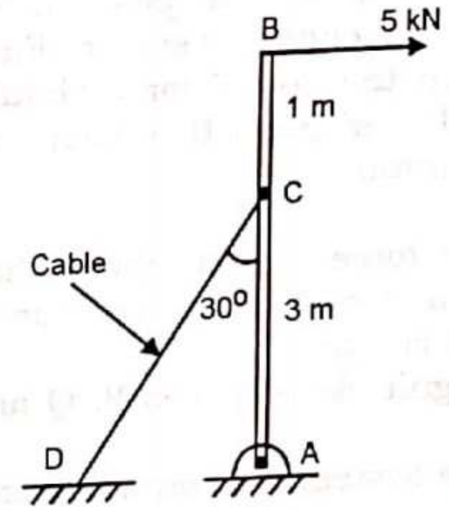

P19. Determine the tension T in the cable and the reaction at pin support A for the beam loaded as shown. Neglect weight of the beam and the size of the pulley.

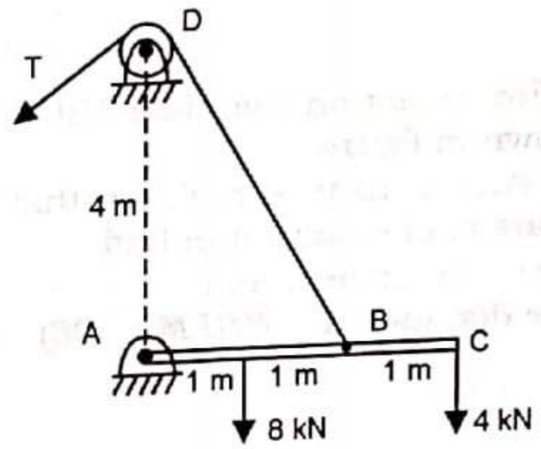

P20. A prismatic bar AB of length 6 m and weight 3 kN is hinged to a wall and supported by a cable BC. Find hinge reaction and tension in cable BC.

(MU Dec 15)

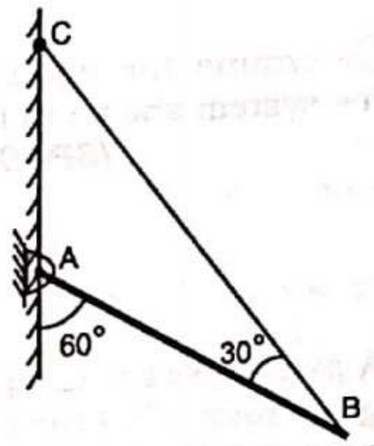

P21. A non uniform heavy rod AB of length 3 m lies on horizontal ground. To lift the end B off the ground needs a vertical force of 200 N. To lift A end off the ground needs a force of 160 N. Find the weight of the rod and the position of centre of mass.

(M.U. May 08)

P22. (a) A uniform wheel of 800 mm diameter, weighing 6 kN rests against a rigid rectangular block of 150 mm height as shown in figure. Find the least pull, through the center of the wheel, required just to turn the wheel over the edge A of the block. Also find the reaction on the block. Take all the surface to be smooth. ***(VJTI Nov 09)***

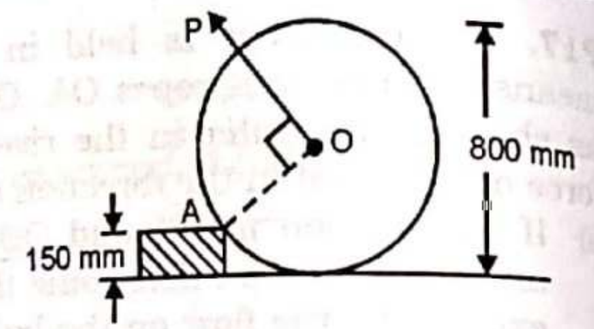

P23. A weightless bar 4m long is placed in a horizontal position on the smooth inclines as shown. Find x at which the 200 N force should be placed from point B to keep the bar horizontal.

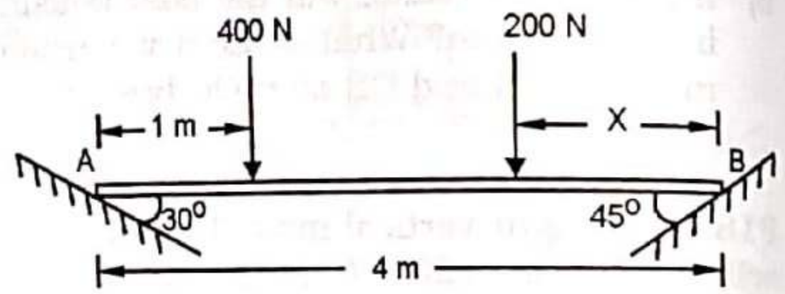

P24. The force system shown has neither a resultant force nor a resultant couple.
Find magnitude of forces P, Q and R.
Hint: The system is in equilibrium.

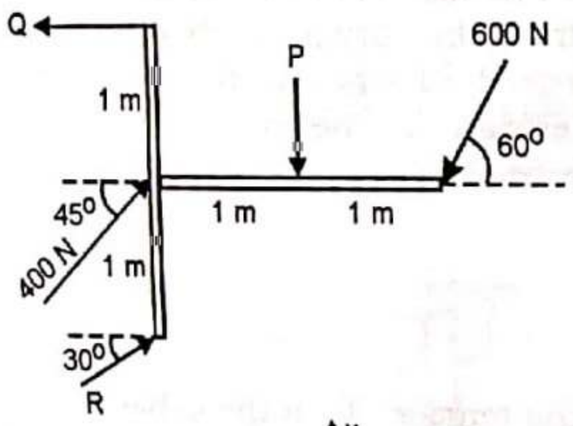

P25. Forces act on the plate ABCD as shown in figure.
The distance AB is 4 m. Given that the plate is in equilibrium find.
(i) force F (ii) angle α and
(iii) the distance AD. ***(MU May 08)***

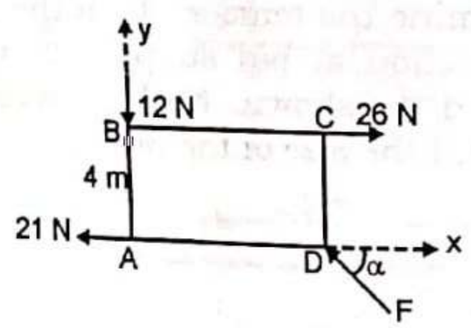

P26. Determine the equilibrant of the force system shown in figure.
(SPCE Nov 12)

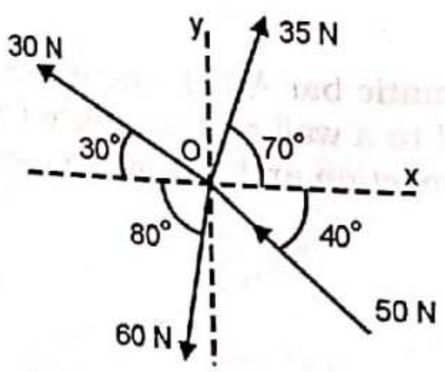

P27. A man raises a 12 kg joist of length 4m by pulling the rope. Find the tension in the rope and the reaction at A. ***(MU Dec 10)***

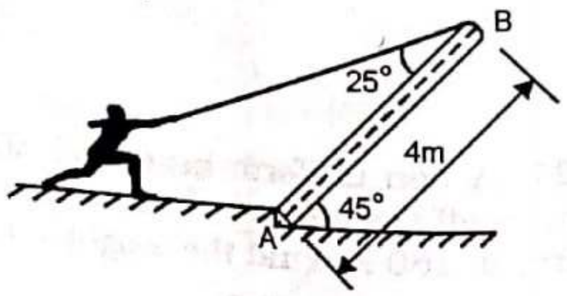

3.11 Equilibrium of Connected Bodies

When two or more rigid bodies are connected to each other, they form a system of connected bodies. Though the COE can be applied to the entire system, the individual bodies can also be isolated from the internal connections and conditions of equilibrium can be applied to them too.

In a system of connected bodies if there are more than three unknowns in the system we isolate the connected system from the internal connection and apply COE to isolated bodies as well as COE to the system, thus getting sufficient equations for the many unknowns in the system. The internal connection could be a hinge (commonly referred to as pin), roller, smooth surface or a rope.

At the internal connection say of a hinge, the sense of components of reaction are assumed on any one of the bodies initially and the opposite sense is assumed on the other body (since an internal force, when exposed, occurs in pair, having the same magnitude, collinear and opposite in sense)

Fig. 3.20 (a) shows a system of connected bodies. There are two bodies AC and BC in the system. The external supports are the hinge at A and roller at B.

The internal connection is a hinge at C. Fig. 3.20 (b) shows the FBD of the whole system. The two bodies can be isolated from the internal hinge C. Fig. 3.20 (c) shows the FBD's of the isolated bodies. Note that the sense of H_C and V_C on the member AC is opposite to that on member BC.

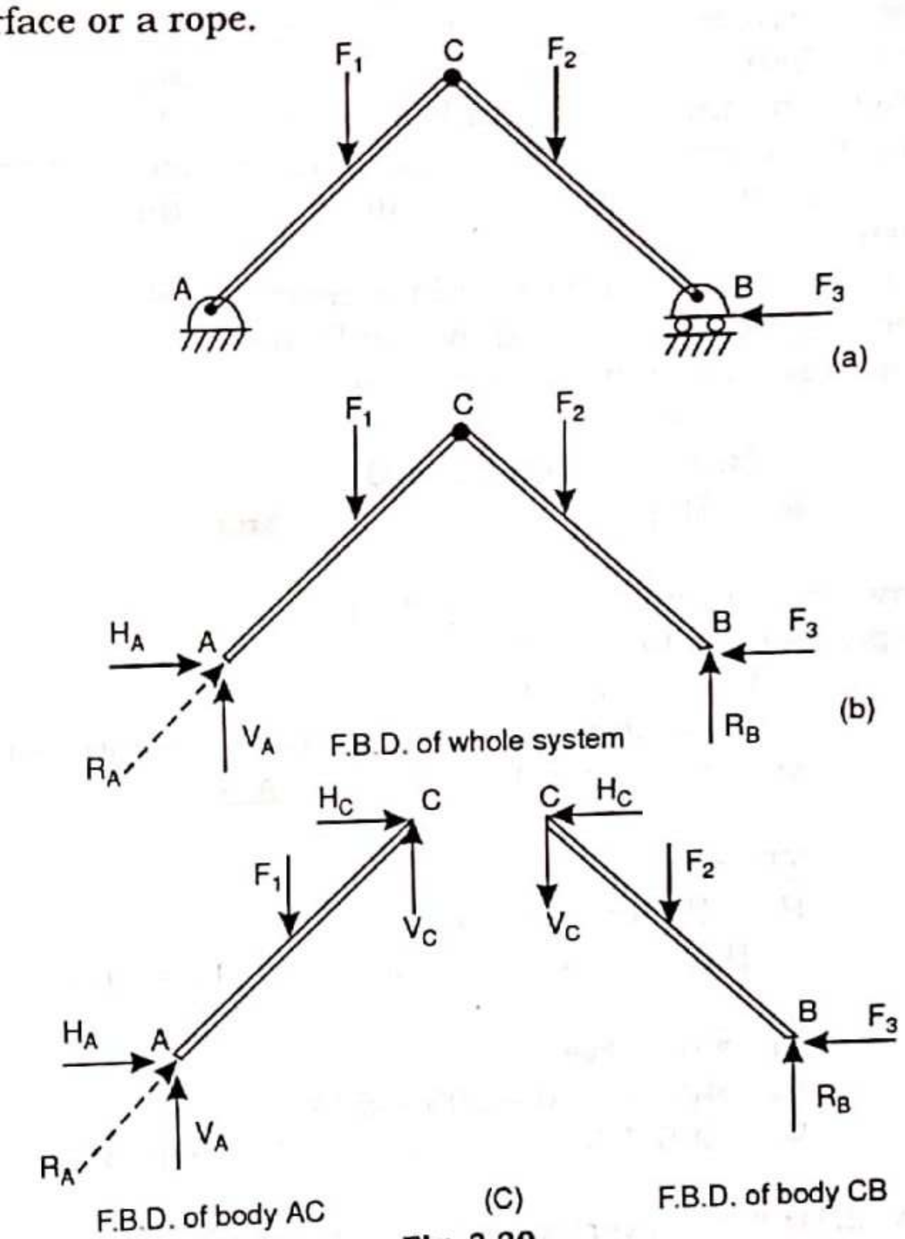

Fig. 3.20

The following examples will help us understand the concept behind a system of connected bodies, the way we isolate the bodies, show the internal forces in pair, in opposite sense at the internal connection and finally apply COE to the system as well as to the isolated bodies, to get the unknowns.

Ex.3.9 A compound beam ABC is loaded and supported as shown. Find support reactions.

Note: B is an internal hinge.

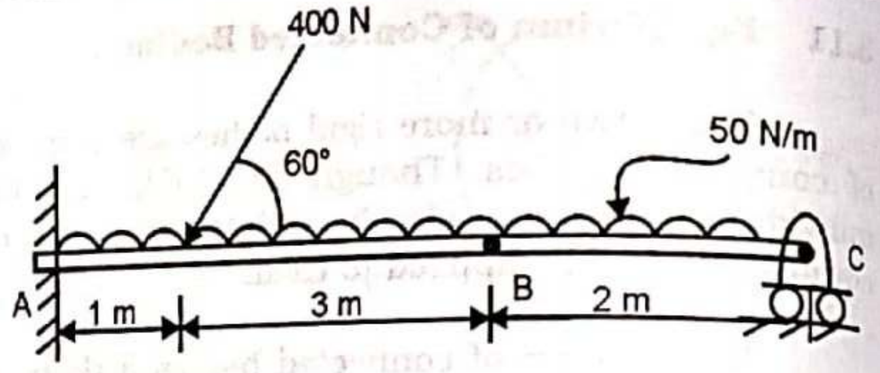

Solution: The system has two bodies AB and BC. The external supports consists of a fixed support at A and a roller support at C. The bodies are internally connected by a hinge at B.

Figure shows the FBD of the system. We find there are four external unknown reactions and we have only three COE. We will therefore have to isolate the system. Portion BC is shown isolated from the system.

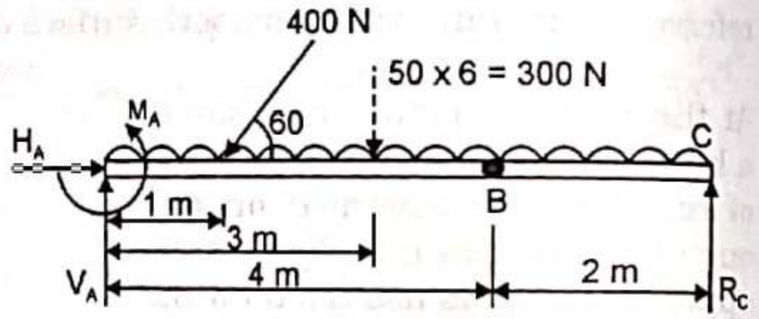

FBD OF SYSTEM

On isolation the internal hinge reactions H_B and V_B can be seen as shown in figure.

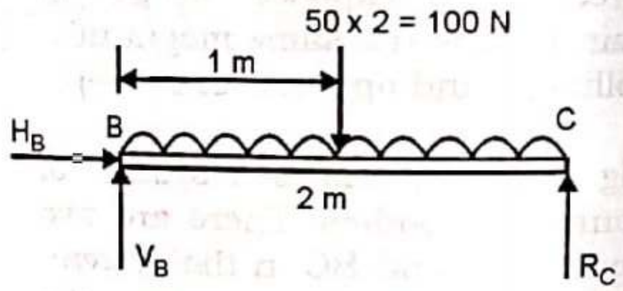

FBD OF PART BC

Applying COE to isolated part BC

$\Sigma M_B = 0$ ↺ + ve

$-(100 \times 1) + (R_C \times 2) = 0$

$\therefore$ $R_C = 50$ N ↑ ..... **Ans.**

Now we can return to the system.

Applying COE to system

$\Sigma M_A = 0$ ↺ + ve

$+ M_A - (400 \sin 60 \times 1) - (300 \times 3) + (50 \times 6) = 0$

$\therefore$ $M_A = 946.4$ Nm ↺ ..... **Ans.**

$\Sigma F_X = 0$ → +ve

$H_A - 400 \cos 60 = 0$

$\therefore$ $H_A = 200$ N or $H_A = 200$ N → ..... **Ans.**

$\Sigma F_y = 0$ ↑ +ve

$V_A - 400 \sin 60 - 300 + 50 = 0$

$\therefore$ $V_A = 596.4$ N or $V_A = 596.4$ N ↑ ..... **Ans.**

Ex. 3.10 For a lever system shown, find the support reactions.

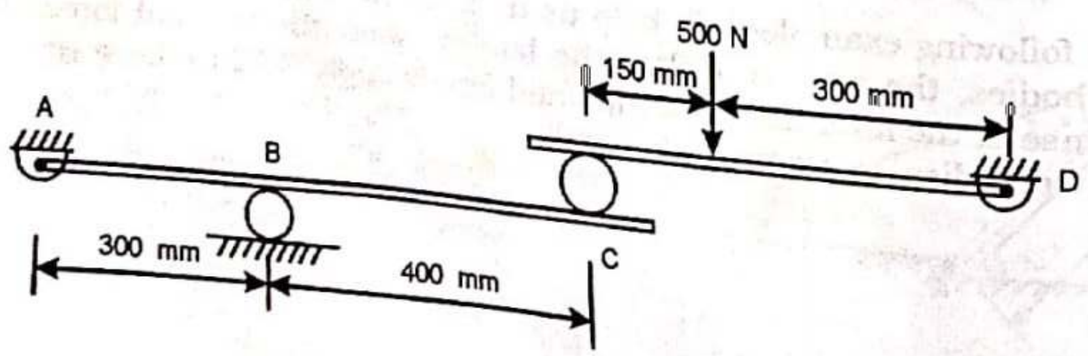

Solution: The system contains two bodies AC and CD. The external supports are;

1) Hinge at A giving reaction R_A. Let H_A and V_A be the components of R_A.
2) Roller at B giving reaction R_B.
3) Hinge at D giving reaction R_D. Let H_D and V_D be the components of R_D

The bodies are internally connected by a roller at C.

Figure shows the FBD of the system of two connected bodies. There are in all five unknowns viz., H_A, V_A, H_D, V_D, and R_B and we have three COE for the system.

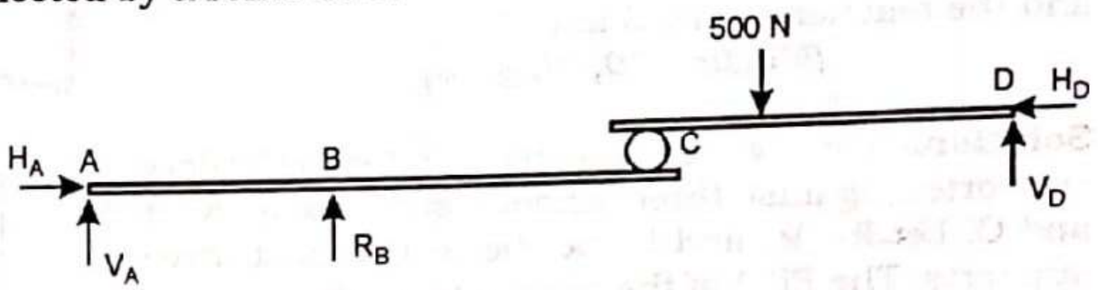

We are therefore not in a position to find the unknowns.

Let us therefore isolate the two bodies and apply COE to each of them. Refer figure. Note that the internal force R_C occurs in pair, of same magnitude, collinear and opposite in sense.

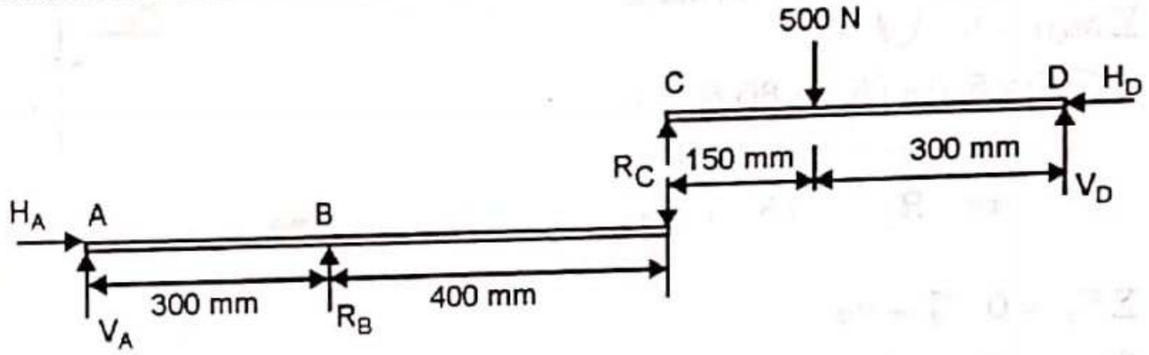

Applying COE to body CD.

$M_D = 0$ ↺ + ve

$+ (500 \times 300) - (R_C \times 450) = 0$

$R_C = 333.33$ N $\therefore$ $R_C = 333.33$ N ↑ on body CD.

$\Sigma F_Y = 0$ ↑ + ve

$333.33 - 500 + V_D = 0$

$V_D = 166.67$ N $\therefore$ $V_D = 166.67$ N ↑ ..... **Ans.**

$\Sigma F_X = 0$ → + ve ..... **Ans.**

$H_D = 0$

Applying COE to body AC

using $R_C = 333.33$ N ↓ on body AC

$\Sigma M_A = 0$ ↺ + ve

$-(333.33 \times 700) + (R_B \times 300) = 0$

$R_B = 777.7$ N $\therefore$ $R_B = 777.7$ N ↑ ..... **Ans.**

$\Sigma F_Y = 0$ ↑ +ve

$V_A + 777.7 - 333.3 = 0$

$V_A = -444.4$ $\therefore$ $V_A = 444.4$ N ↓ ..... **Ans.**

$\Sigma F_X = 0$ → + ve ..... **Ans.**

$H_A = 0$

Ex. 3.11 Two cylinders each of diameter 100 mm and each weighing 200 N are placed as shown in figure. Assuming that all the contact surfaces are smooth find the reactions at A, B and C.

(MU Dec 09, May 13)

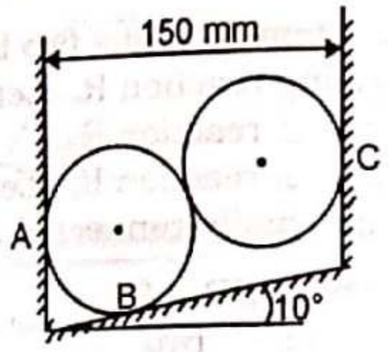

Solution: The system consists of two cylinders supported against three smooth surfaces at A, B and C. Let R_A, R_B and R_C be the reactions at three supports. The FBD of the system is shown.

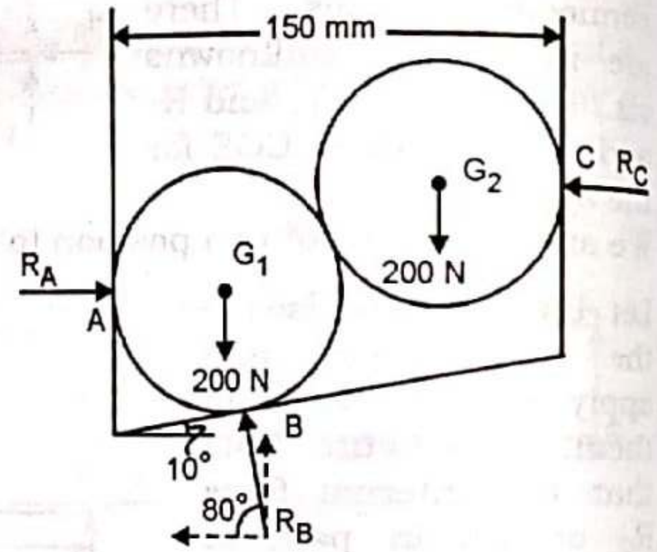

Applying COE to the system

$\Sigma M_{G1} = 0 \circlearrowleft +ve$

$-(200 \times 50) + (R_C \times 86.6) = 0$

$\therefore \; R_C = 115.47\,N$

or $R_C = 115.47\,N \leftarrow$ ..... **Ans.**

$\Sigma F_y = 0 \uparrow +ve$

$R_B \sin 80 - 200 - 200 = 0$

$\therefore \; R_B = 406.17\,N$

or $R_B = 406.17\,N$, $\theta = 80°\measuredangle$..... **Ans.**

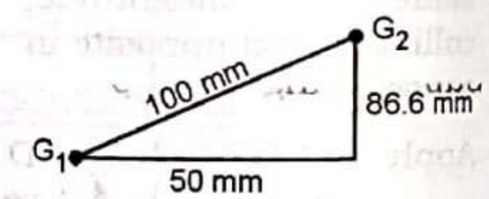

$\Sigma F_x = 0$

$R_A - R_B \cos 80 - R_C = 0$

$R_A - 406.17 \cos 80 - 115.47 = 0$

$\therefore \; R_A = 186\,N$

or $R_A = 186\,N \rightarrow$ ..... **Ans.**

Ex. 3.12 Three smooth spheres rest against two inclined smooth planes as shown. Determine

a) The reaction force at contact points when $\theta = 30°$

b) The minimum angle θ for which the spheres remain in equilibrium.

Take for sphere 1 weight = 500 N and radius = 0.2 m

for spheres 2 and 3 weight = 1000 N and radius = 0.4 m

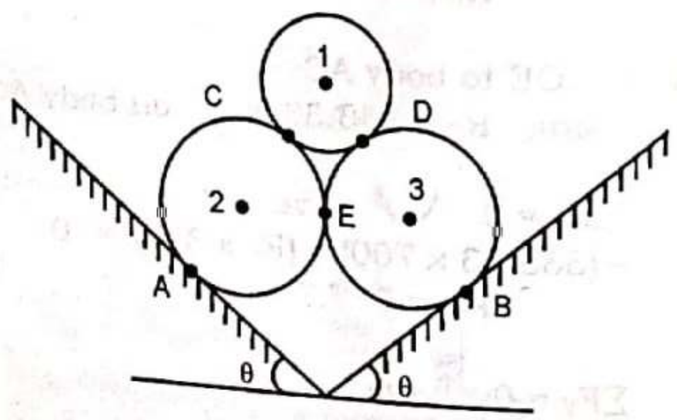

Solution: a) Given: $\theta = 30°$

Let us isolate the bodies as shown in figure. Since the external supports at A and B and internal supports at C, D and E are smooth surfaces, these offer a reaction force normal to the smooth surface.

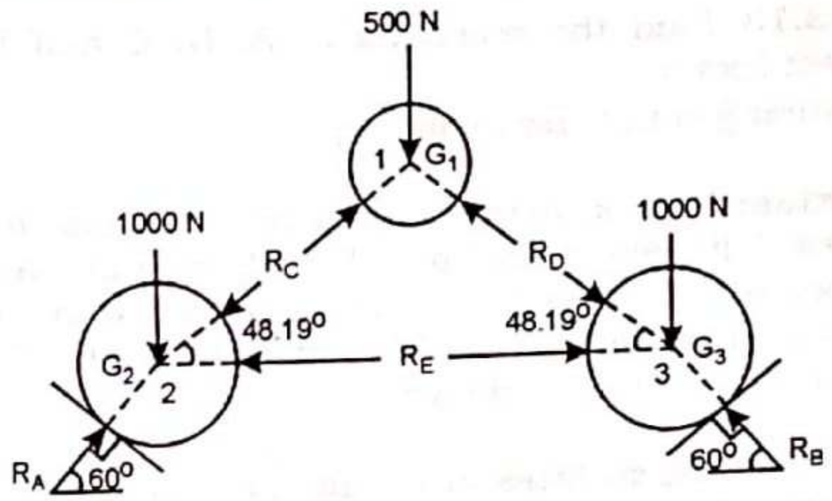

Applying COE to sphere 1

$\Sigma F_X = 0 \rightarrow +ve$

$R_C \cos 48.19 - R_D \cos 48.19 = 0$

$\therefore \quad R_C = R_D$ ..... (1)

$\Sigma F_Y = 0 \uparrow +ve$

$-500 + R_C \sin 48.19 + R_D \sin 48.19 = 0$ ..... (2)

Solving equations (1) and (2) we get, $R_C = R_D = 335.4$ N

Applying COE to sphere 2

$\Sigma F_Y = 0 \uparrow +ve$

$R_A \sin 60 - R_C \sin 48.19 - 1000 = 0$ ..... (3)

Substituting $R_C = 335.4$ N, we get, $R_A = 1443.3$ N ..... **Ans.**

$\Sigma F_X = 0 \rightarrow +ve$

$R_A \cos 60 - R_C \cos 48.19 - R_E = 0$ ..... (4)

Substituting $R_A = 1443.3$ N, and $R_C = 335.4$ N, we get $R_E = 498.1$ N ..... **Ans.**

By symmetry of loading and symmetry of supports we can say,

$R_B = R_A = 1443.3$ N ..... **Ans.**

b) To find minimum angle θ

As the angle θ is slowly reduced, a stage will be reached when the pyramid of spheres will collapse.

At the minimum angle θ when the system is about to collapse, the reaction at E becomes zero. i.e. $R_E = 0$

By analysis of sphere (1) as done earlier, the reactions $R_C = R_D = 335.4$ N remain the same.

Let us now apply COE and analyse sphere (2) to find the minimum angle θ

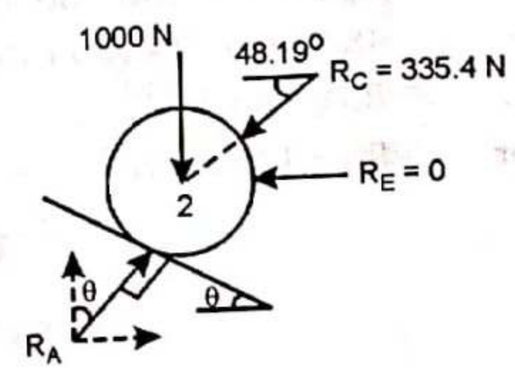

$\Sigma F_X = 0 \rightarrow +ve$

$R_A \sin\theta - 335.4 \cos 48.19 = 0$

$\therefore \quad R_A \sin\theta = 223.6$ ..... (5)

$\Sigma F_Y = 0 \uparrow +ve$

$R_A \cos\theta - 335.4 \sin 48.19 - 1000 = 0$

$\therefore \quad R_A \cos\theta = 1250$ ..... (6)

Solving equations (5) and (6) we get, $\theta = 10.14°$ ... **Ans.**

Ex. 3.13 Find the reactions at A, B, C and D. Neglect friction.
(notation ϕ stands for diameter)

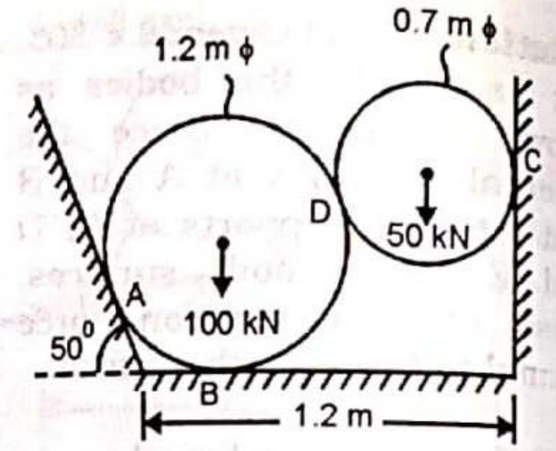

Solution: This system consists of two connected bodies, left sphere and a right sphere, internally supported by a smooth surface at D and externally supported by smooth surfaces at A, B and C. The FBD of the system is shown.

Note that the surfaces at A and B are tangents to the left sphere. These tangents intersect at point O forming an angle of 130° between them. From geometry, the line joining the centre G_1 to point O, bisects the angle AOB.

$\therefore \quad \angle\ G_1OB = \frac{130}{2} = 65°$

Now,

$\tan 65 = \frac{L(G_1B)}{L(OB)} = \frac{0.6}{L(OB)} \quad \therefore \quad L(OB) = 0.2798$ m

Also $\quad L(G_1M) = 1.2 - 0.2798 - 0.35 = 0.5702$ m

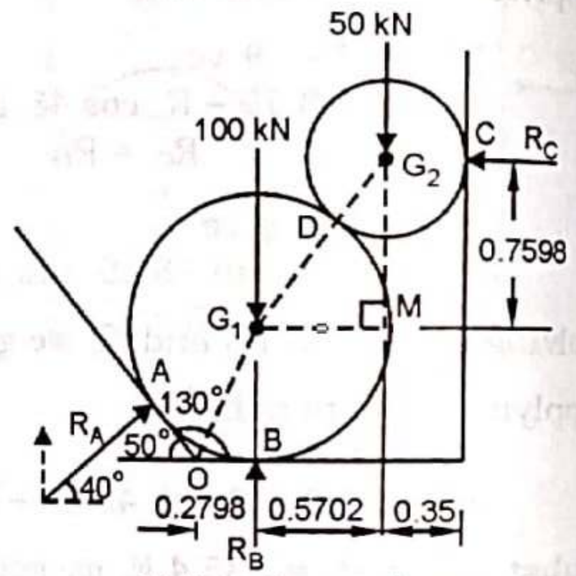

All dimensions are in mm

FBD of System

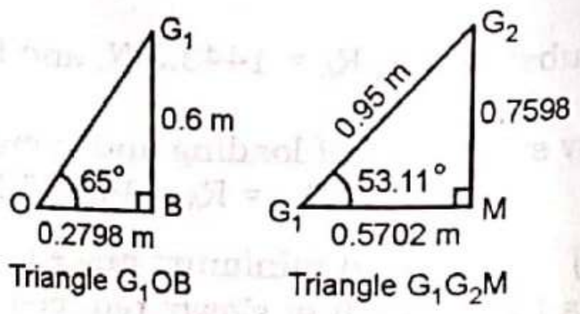

COE – System

$\Sigma M_{G_1} = 0 \quad \circlearrowleft + ve$

$-(50 \times 0.5702) + R_C \times 0.7598 = 0$

$\therefore \quad R_C = 37.52$ kN or

$R_C = 37.52$ kN ← ..... **Ans.**

$\Sigma F_x = 0 \quad \rightarrow + ve$

$R_A \cos 40 - R_C = 0$

$\therefore \quad R_A \cos 40 - 37.52 = 0$

$\therefore \quad R_A = 48.98$ kN, $\theta = 40° \measuredangle$ ..... **Ans.**

$\Sigma F_y = 0 \quad \uparrow + ve$

$R_A \sin 40 - 100 - 50 + R_B = 0$

$\therefore \quad 48.98 \sin 40 - 150 + R_B = 0$

$\therefore \quad R_B = 118.5$ kN

or $\quad R_B = 118.5$ kN ↑ ..... **Ans.**

Note that forces R_A and R_B pass through G_1, while R_C passes through G_2.

Ex. 3.14 A weightless bar ABCD hinged at A rests on a smooth cylinder of weight 400 N at point C. It is also supported by a cable BO. A vertical load of 1000 N acts at D. Determine the support reactions and tension in the cable.

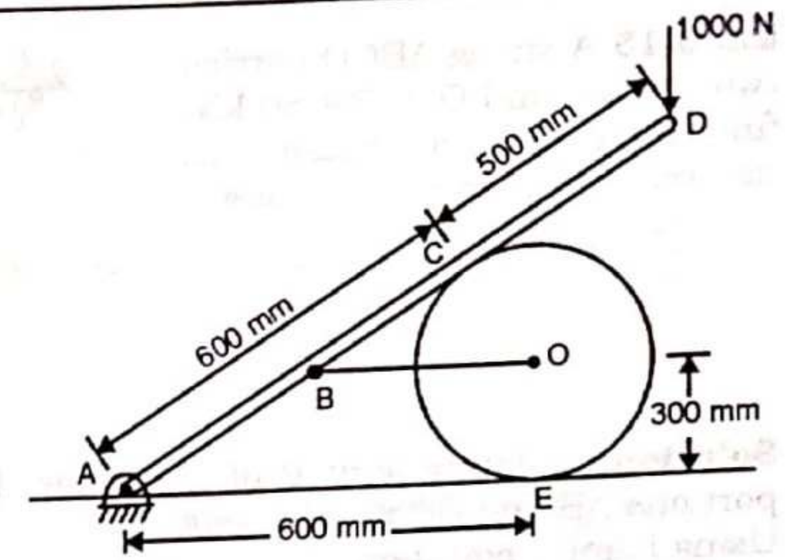

Solution: The system consists of a bar AD and a cylinder. The system is externally supported by a hinge at A and smooth surface at D. The internal supports are two viz the cable BO and a smooth surface at C.

From geometry

$\tan\theta = \frac{300}{600}$ | Also $\cos 53.13 = \frac{x}{1100}$

$\therefore \quad \theta = 26.56°$ | $\therefore \quad x = 660$ mm

Applying COE to the entire system

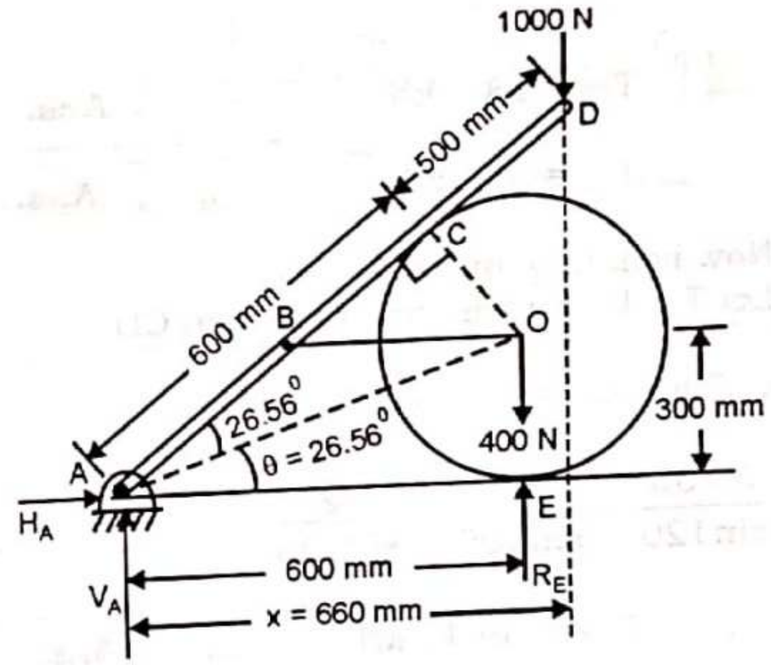

$\Sigma M_A = 0 \quad \circlearrowright + ve$

$-(1000 \times 660) - (400 \times 600) + (R_E \times 600) = 0$

$\therefore \quad R_E = 1500$ N

or $\quad R_E = 1500$ N ↑ ..... **Ans.**

$\Sigma F_X = 0 \quad \rightarrow + ve$

$H_A = 0$ ..... **Ans.**

$\Sigma F_Y = 0 \quad \uparrow + ve$

$V_A + 1500 - 1000 - 400 = 0$

$V_A = -100$ N

or $\quad V_A = 100$ N ↓ ..... **Ans.**

To find the tension in the cable we will have to isolate the two bodies

Figure shows the FBD of the isolated rod AD. On isolation the internal smooth surface at C gives a reaction R_C perpendicular to the rod while the internal rope now exposes the tension forces T in it.

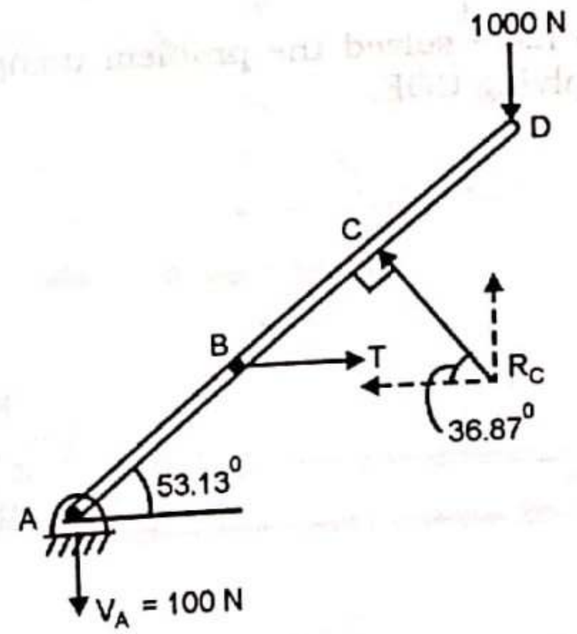

Applying COE to isolated rod AD

$\Sigma F_Y = 0 \quad \uparrow + ve$

$R_C \sin 36.87 - 1000 - 100 = 0$

$\therefore \quad R_C = 1833.3$ N

$\Sigma F_X = 0 \quad \rightarrow + ve$

$T - R_C \cos 36.87 = 0$

$\therefore \quad T - 1833.3 \cos 36.87 = 0$

$\therefore \quad T = 1466.6$ N ..... **Ans.**

Ex. 3.15 A string ABCD carries two loads P and Q. If P = 50 kN, find force Q and tensions in different portions of the string.

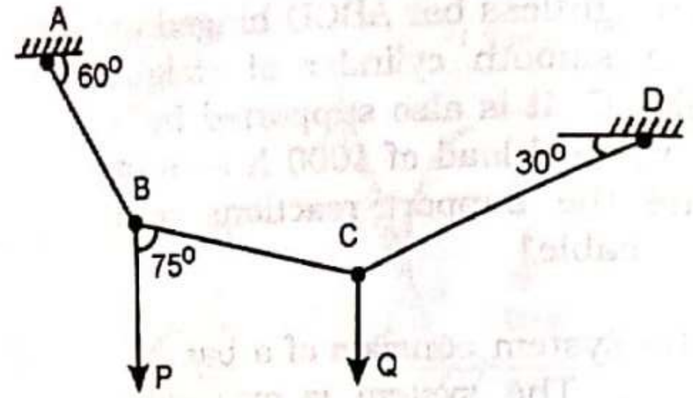

Solution: Isolating joint B of the string. Let T_{AB} and T_{BC} be the tensions in the string portions AB and BC respectively.
Using Lami's equation

$$\frac{T_{AB}}{\sin 75} = \frac{T_{BC}}{\sin 150} = \frac{50}{\sin 135}$$

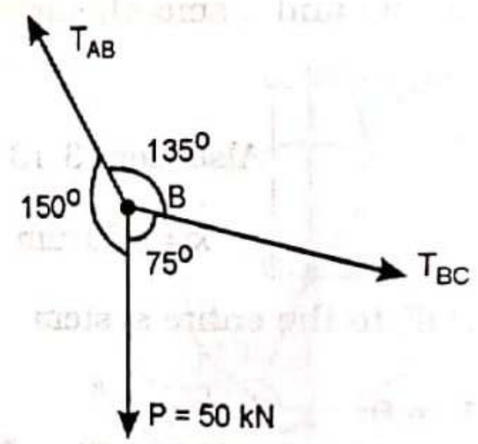

∴ T_{AB} = 68.3 kN ..... **Ans.**

T_{BC} = 35.35 kN .....**Ans.**

Now isolating joint C.
Let T_{CD} be the tension in portion CD.

Using Lami's equation

$$\frac{35.35}{\sin 120} = \frac{T_{CD}}{\sin 105} = \frac{Q}{\sin 135}$$

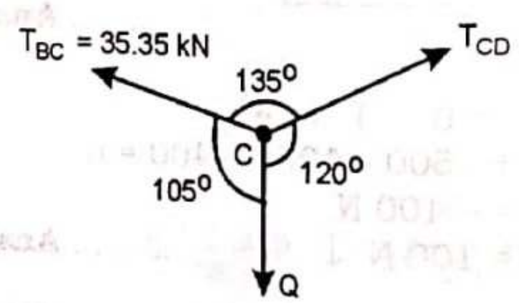

∴ T_{CD} = 39.43 kN ..... **Ans.**

Q = 28.86 kN ..... **Ans.**

We have solved the problem using Lami's equation. As an Exercise solve the problem applying COE.

Exercise 3.2

P1. A two span beam ABCD is loaded as shown. Calculate support reaction.

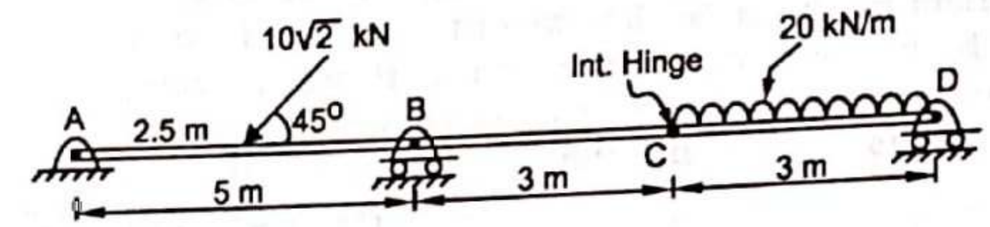

P2. A beam ABC, fixed at A and roller supported at C is internally connected by a pin at B. Determine the support reactions.

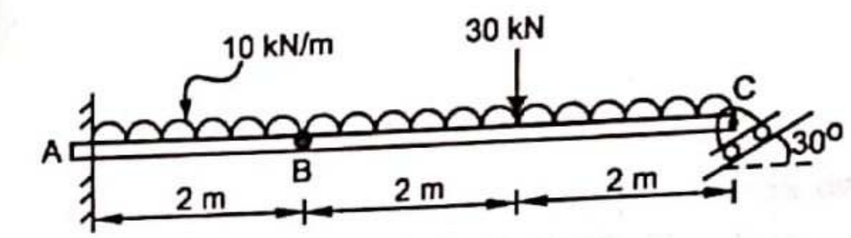

P3. Find the reactions at hinge A, fixed support D. Also find reaction at roller on CD.

(KJS Nov 15)

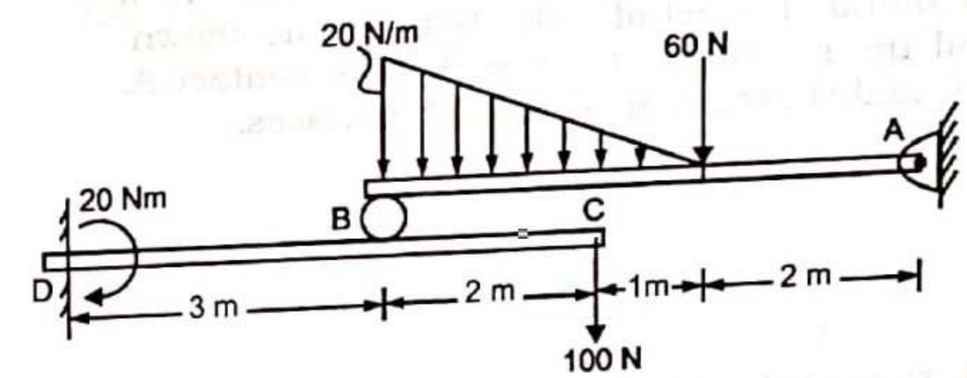

P4. The beam is loaded as shown in figure. Determine the reactions at fixed support A, roller support B and reaction at internal hinge C. ***(SPCE Dec 10)***

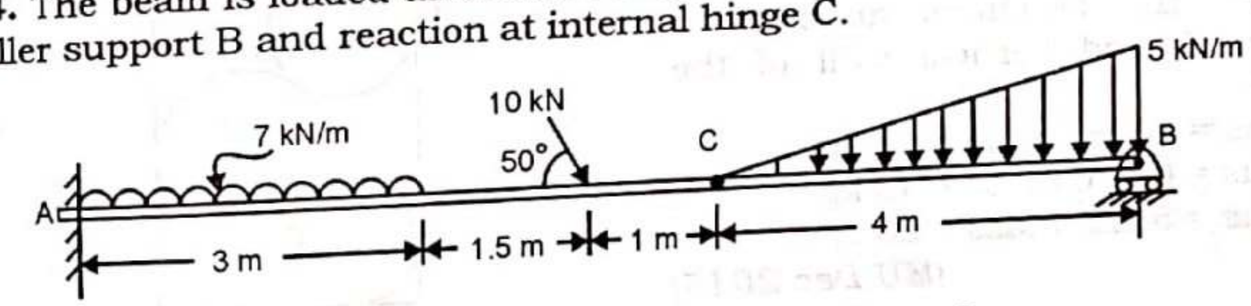

P5. A two bar mechanism is internally pinned at B and externally supported as shown. It is subjected to external loads as shown. Calculate force P required at C to maintain the configuration.

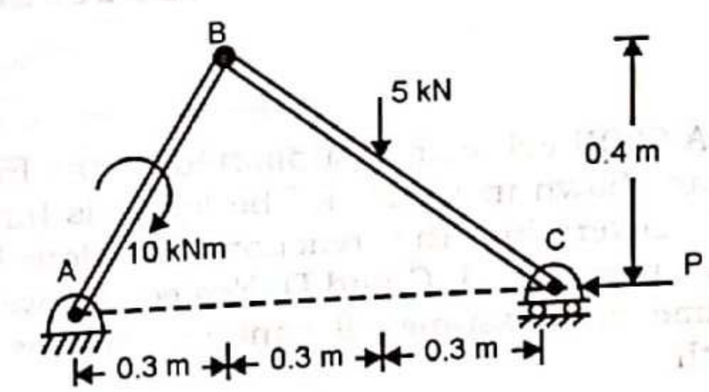

P6. For the beam shown, find reactions at the supports. C is an internal hinge.

(SPCE Nov 12)

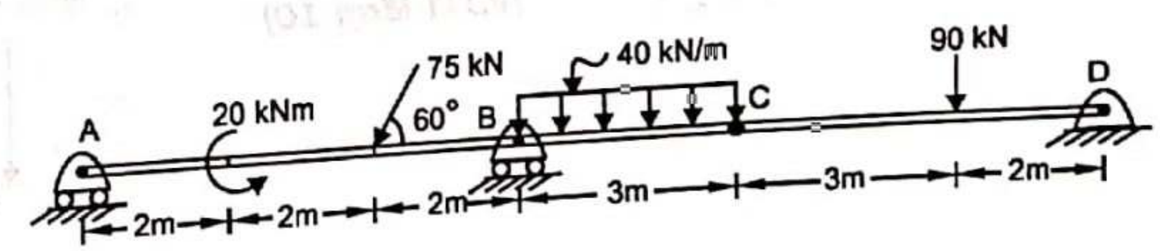

P7. A uniform beam AB hinged at A is kept horizontal by a 50 kN weight supported on it with the help of a string tied at B and passing over a smooth pulley at C as shown. The beam weight is 25 kN. Find the reaction at A and C.

(VJTI Dec 13)

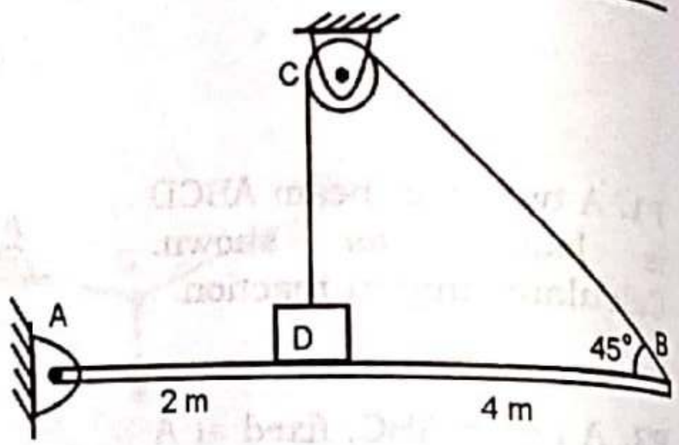

P8. Two smooth spheres of weight 100 N and of radius 250 mm each are in equilibrium in a horizontal channel of width 900 mm as shown. Find the reactions at the surface of contact A, B, C and D assuming all smooth surfaces.

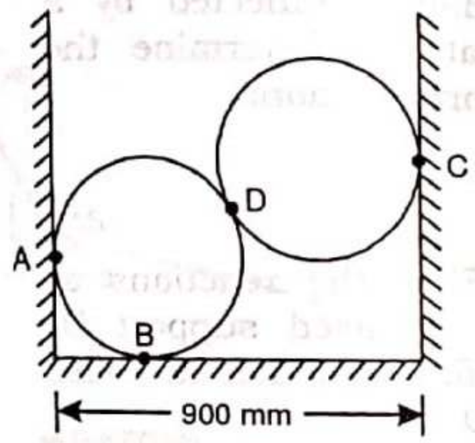

P9. Three right circular cylinders A, B and C are piled up in a rectangular channel as shown in figure. Determine the reactions at point 6 between cylinder A and vertical wall of the channel.

Cylinder A: radius = 4 cm, mass = 15 kg.
Cylinder B: radius = 6 cm, mass = 40 kg.
Cylinder C: radius = 5 cm, mass = 20 kg.

(MU Dec 2015)

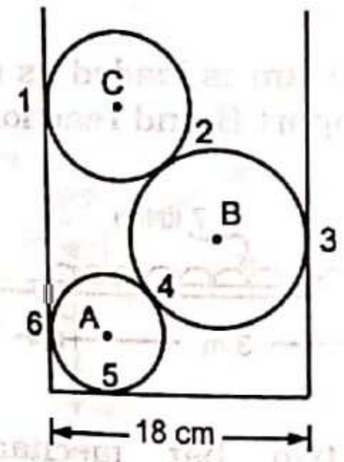

P10. A 600N cylinder is supported by the frame BCD as shown in figure 4. The frame is hinged at D. Determine the reactions developed at contact points A, B, C and D. Neglect the weight of frame and assume all contact surfaces are smooth

(VJTI May 10)

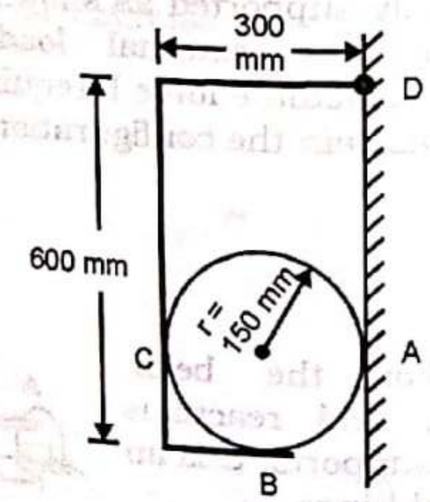

P11. Sphere A = 1000 N rests on two spheres B and C of weight 900 N each. The spheres B and C are connected by an inextensible string of length L = 600 mm. Assuming smooth contacts and radius of spheres to be 200 mm, determine the reactions at all contact points 1 to 4 and also the force in the string.

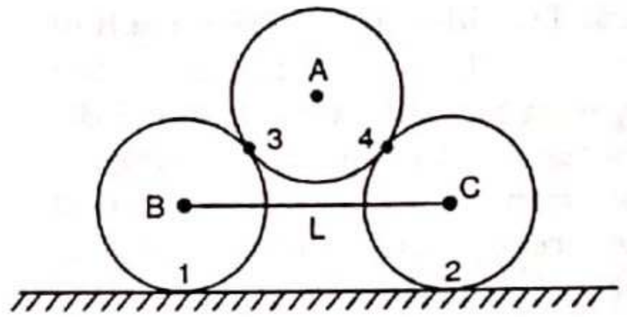

P12. Two spheres A and B of weight 1000 N and 750 N respectively are kept as shown in figure. Determine the reactions at all contact points 1, 2, 3 and 4. Radius of A = 400 mm and radius of B = 300 mm. ***(MU May 11, Dec 16)***

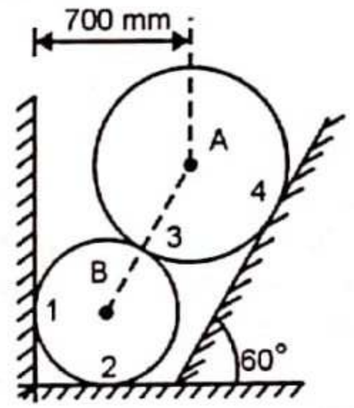

P13. Determine the reactions at points of contact 1, 2 and 3. Assume smooth surfaces.
Take m_A = 1 kg, m_B = 4 kg.

(NMIMS May 09, KJS Nov 15, May 17, MU Dec 17)

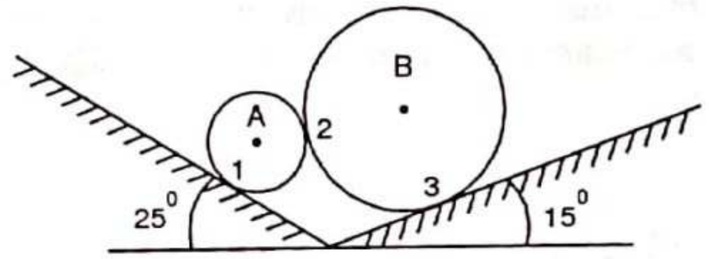

P14. A cylinder of weight 300 N is held in equilibrium as shown. Determine the tension in string AD and reaction at C and B. The length of AE = 750 mm.

(MU Dec 14)

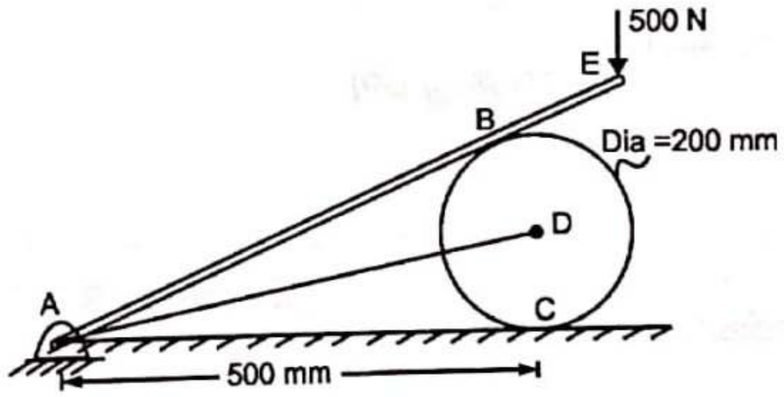

P15. Two homogenous solid cylinders of identical weight of 5000 N and radius of 0.4 m are resting against inclined wall and sloping ground as shown. Assuming smooth surfaces find the reactions at A, B and C of the contact points.

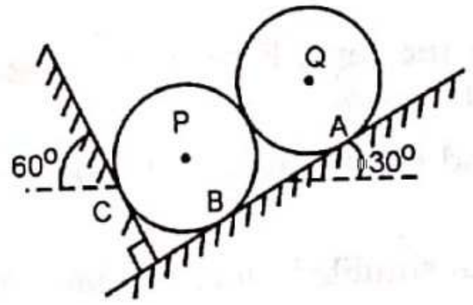

P16. Two identical rollers each of weight 500 N and radius r are kept on a right angle frame ABC having negligible weight. Assuming smooth surfaces, find the reactions induced at all contact surfaces.

(MU Dec 12)

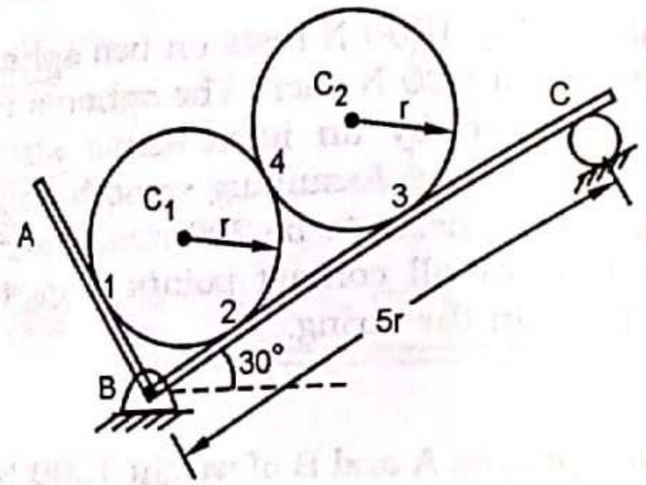

P17. A cylinder of diameter 1 m and weighing 1000 N and another block weighing 500 N are supported by a beam of length 7 m and weighing 250 N with the help of a cord as shown. If the surfaces of contact are frictionless, determine tension in cord and reaction at point of contacts.

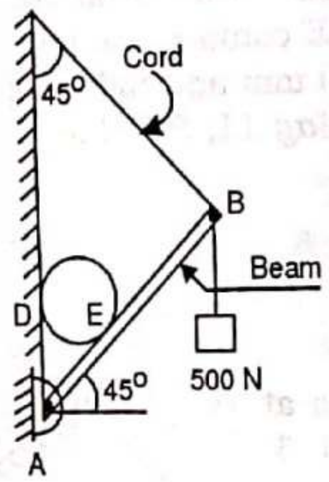

P18. A 30 kg pipe is supported at 'A' by a system of five chords. Determine the force in each chord for equilibrium.

(MU May 09)

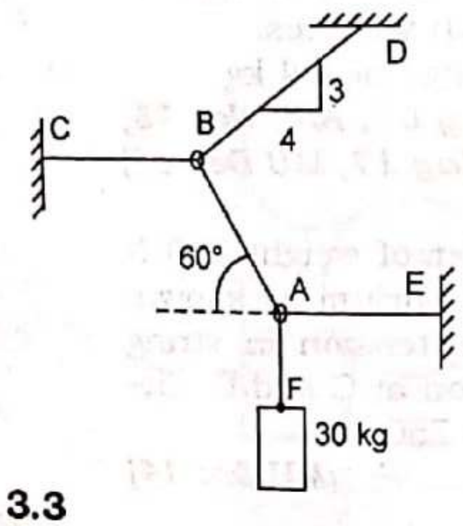

Exercise 3.3

Theory Questions

Q.1 What are the necessary conditions for a body to be in a state of equilibrium. ***(MU)***

Q.2 Define the term Free Body Diagram. What is the significance of drawing a free body diagram. ***(MU Dec 08, May 08)***

Q.3 List and explain different types of supports and their reactions. ***(VJTI Dec 11, NMIMS May 17)***

Q.4 What is equilibrium of two force body. ***(VJTI May 10)***

Q.5 What is equilibrium of three force body. ***(MU)***

Q.6 State and prove Lami's theorem of three forces. ***(MU Dec 13, VJTI Dec 13)***

Q.7 Define equilibrant. ***(VJTI May 10)***

★ ★ ★

Chapter 4

Friction

4.1 Introduction

We have so far dealt with smooth surfaces, which offer a single reaction force R. In this chapter we deal with rough surfaces which offer an additional reaction known as *friction force*. Friction force is developed whenever there is a motion or tendency of motion of one body with respect to the other body involving rubbing of the surfaces of contact. We will understand the concept of friction and also present the laws of friction. Application of friction to the problems of *blocks, ladder, wedges, square threaded screw and rope friction* will be dealt with in this chapter.

4.2 Frictional Force

Friction is of two types i) *Dry Friction* ii) *Fluid Friction*. Dry friction also known as Coulomb friction involves friction due to rubbing of rigid bodies, for example a block tending to move on table or a wheel rolling on the ground. Fluid friction is developed between layers of fluids as they move with different velocities inside a pipe, bodies moving over lubricated surface, etc. Our study would be limited to Dry Friction.

Frictional force is generated whenever a body moves or tends to move over another surface. This is best illustrated by the following discussion. Consider a block of weight W resting on a rough surface. Let the normal reaction be N. The block is in equilibrium under the action of two forces. Fig. 4.1 (a)

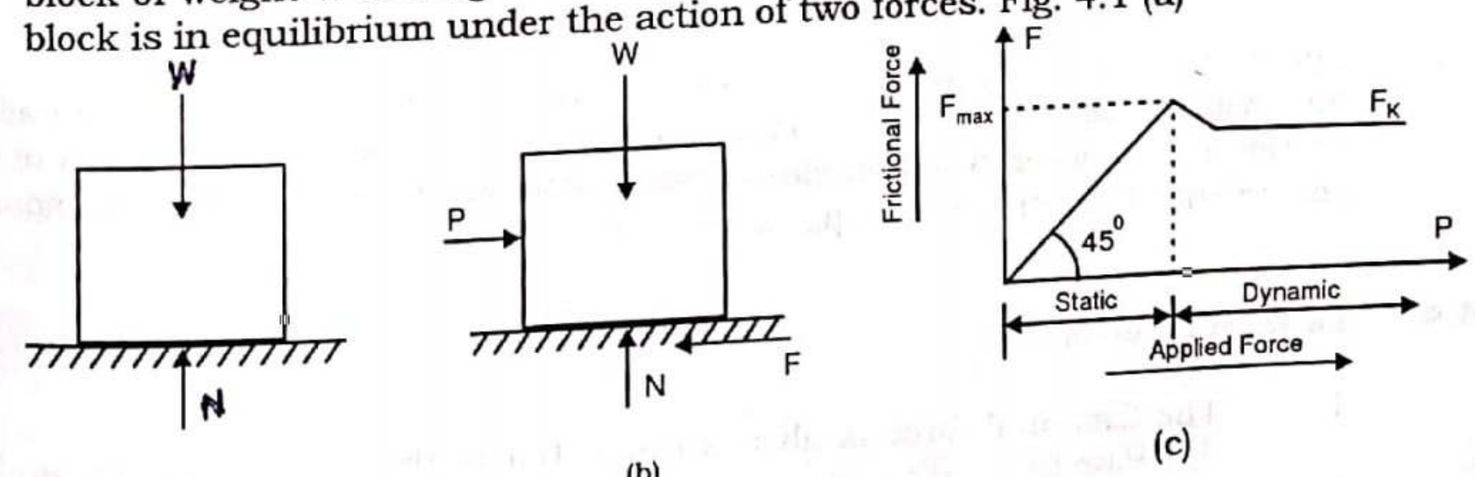

Fig. 4.1

Now if an attempt is made to disturb the equilibrium by applying a force P as shown in Fig. 4.1 (b), the rough surface generates a friction force F to maintain

the equilibrium. The force F is equal to P and the block is maintained in equilibrium. If P is now increased the friction force F also increases {refer graph shown in Fig. 4.1 (c)}. However the surface can generate a maximum friction known as *limiting friction force* F_{max}. If P exceeds F_{max}, the body would be set into motion and the block is said to be in a *dynamic state*. In dynamic state, the same surfaces develop a lower friction force known as *kinetic frictional force* F_k.

Friction force generated is generally due to presence of hills and valleys on any surface and to smaller extent due to molecular attraction. Fig. 4.2 shows a macroscopic view of two contacting surfaces enlarged 1000 times.

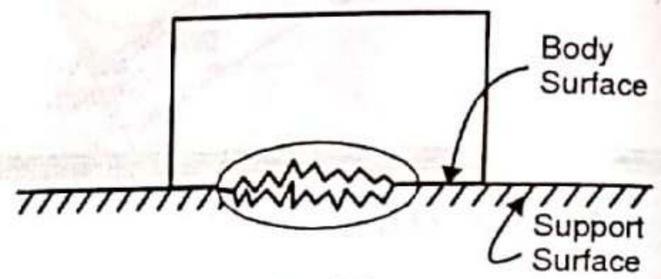

Fig. 4.2

When the body is in static condition, there is greater interlocking between the hills and the valleys of the two surfaces. As the body becomes dynamic, the interlocking reduces resulting in lowering the friction force to a new value F_k.

4.3 Coefficient of Friction

It has been experimentally found that the ratio of the limiting frictional force F_{max} and the normal reaction N is a constant. This constant is referred to as *coefficient of static friction*, denoted as μ_s.

$$\mu_s = \frac{F_{max}}{N} \qquad \text{..... 4.1}$$

Similarly the ratio of kinetic frictional force and the normal reaction is known as *coefficient of kinetic friction*, denoted as μ_k.

$$\mu_k = \frac{F_k}{N} \qquad \text{..... 4.2}$$

Since F_k is less than F_{max}, we have $\mu_k < \mu_s$

Coefficient of friction μ_s or μ_k depend on the nature of surfaces of contact and have value less than 1. For example the approximate value of coefficient of static friction (μ_s) between wood on glass ranges between 0.2 to 0.6. The corresponding coefficient of kinetic friction (μ_k) is around 25 % lower.

4.4 Laws of Friction

1. The frictional force is always tangential to the contact surface and acts opposite to the direction of impending motion.
2. The value of frictional force F increases as the applied disturbing force increases till it reaches the limiting value F_{max}. At this limiting stage the body is on the verge of motion.

3. The ratio of limiting frictional force F_{max} and the normal reaction N is a constant and it is referred to as coefficient of static friction (μ_s).
4. For bodies in motion, frictional force developed (F_k) is less than the limiting frictional force (F_{max}). The ratio of F_k and the normal reaction N is a constant and is referred to as coefficient of kinetic friction (μ_k).
5. The frictional force F generated between the two rubbing surfaces is independent of the area of contact.

4.5 Angle of Friction, Cone of Friction and Angle of Repose

Angle of Friction:

"It is the angle made by the resultant of the limiting frictional force F_{max} and the normal reaction N with the normal reaction". Fig. 4.3 shows a block of weight W under the action of the applied force P. Let N be the normal reaction. If the block is on the verge of impending motion, the frictional force F_{max} would be developed as shown.

Let R be the resultant of F_{max} and N, making an angle ϕ with the normal reaction. Here ϕ is known as the *angle of friction*.

Here $R = \sqrt{F_{max}^2 + N^2}$

$= \sqrt{(\mu_s N)^2 + N^2}$

also $\tan\phi = \frac{F_{max}}{N} = \frac{\mu_s N}{N}$

$\tan\phi = \mu_s$

$\therefore \quad \phi = \tan^{-1}\mu_s \qquad \text{..... 4.3}$

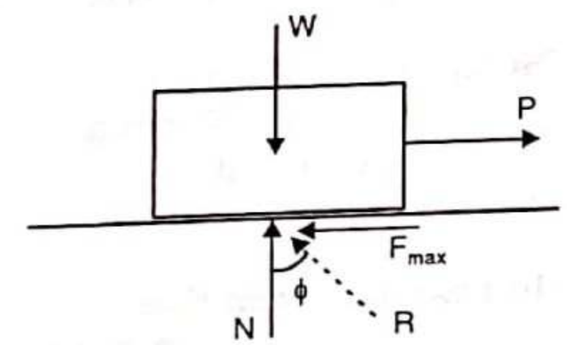

Fig. 4.3

Cone of Friction:

Fig. 4.4 shows a block of weight W on the verge of motion acted upon by force P. Let R be the resultant reaction at the contact surface acting at an angle of friction ϕ. If the direction of force is changed by rotating it through 360° in a plane parallel to the contact surface, the force R also rotates and generates a right circular cone of semi-central angle equal to ϕ. This right circular cone is known as the *cone of friction*.

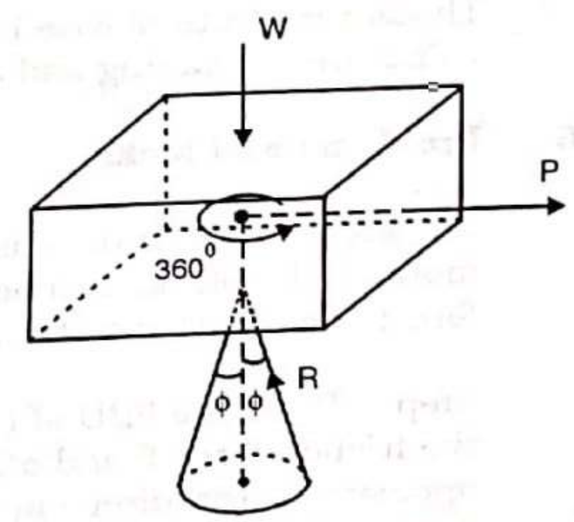

Fig. 4.4

The significance of cone of friction is that for static body the resultant reaction force at the rough contact surface lies within the cone, while for a static body on the verge of motion, the reaction force lies on the surface of the cone of friction.

Angle of Repose:

It is defined as the minimum angle of inclination of a plane with the horizontal for which a body kept on it will just slide down on it without the application of any external force.

Consider a block of weight W resting on a rough horizontal plane. The plane is slowly tilted till the block is just on the verge of sliding down the plane, Fig. 4.5. The angle of inclination of the plane at this position is known as the *angle of repose*. It is denoted by letter α. Angle of repose is independent of the weight of the body and depends only on the coefficient of static friction. Let us derive the relation between angle of repose α and coefficient of static friction μ_s.

Applying COE

$\Sigma F_x = 0 \nearrow +ve$

$F_{max} - W \sin\alpha = 0$

$\therefore \mu_s N - W \sin\alpha = 0$ --------- (1)

$\Sigma F_y = 0 \nwarrow +ve$

$N - W \cos\alpha = 0$

$\therefore N = W \cos\alpha$ --------- (2)

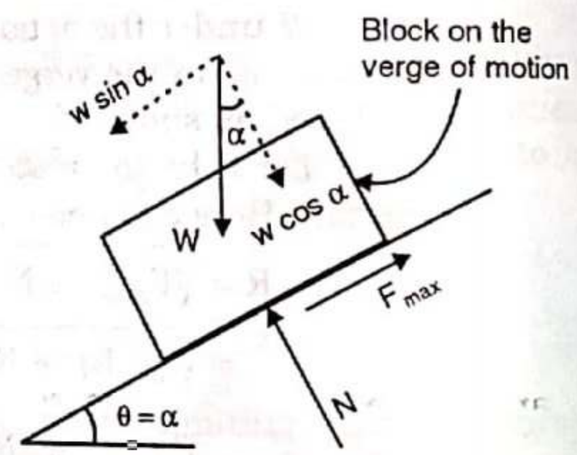

Fig. 4.5

Substituting (2) in (1)

$\mu_s(W \cos\alpha) - W \sin\alpha = 0$

$\tan\alpha = \mu$

or $\alpha = \tan^{-1}\mu_s$ 4.4

but we have seen that

$\phi = \tan^{-1}\mu_s$

$\therefore \alpha = \phi$

i.e. Angle of Repose = Angle of Friction

Though magnitude wise both angle of repose and angle of friction have the same value, their meaning and application are different, as we have seen.

4.6 Problems on Blocks

We will encounter dimensionless blocks acted upon by forces tending to cause motion. The blocks can be modelled as a particle forming a concurrent system of forces. The following steps are adopted in the solution of problems on blocks.

Step 1: Draw the FBD of the block showing the weight W, the normal reaction N, the friction force F and other applied forces. The direction of F is always directed opposite to the direction of impending motion. When the block is on verge of motion, $F = \mu_s N$ should be taken.

Step 2: Since we have a concurrent system of forces in equilibrium we apply two conditions of equilibrium viz.

$\Sigma F_x = 0$

$\Sigma F_y = 0$

Ex. 4.1 A 1500 N block is kept on a rough horizontal surface having $\mu_s = 0.3$ and $\mu_k = 0.2$. Force P is applied as shown. Determine P for motion to just impend.

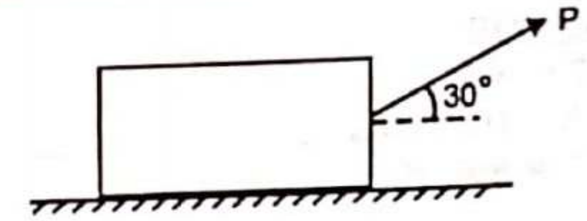

Solution: The FBD of the block is shown in the figure. Since the block is on the verge of motion, friction force $F = \mu_s N = 0.3$ N.

Applying COE

$\Sigma F_x = 0 \rightarrow +ve$

$P \cos 30 - 0.3 N = 0$ -------- (1)

$\Sigma F_y = 0 \uparrow +ve$

$N - 1500 + P \sin 30 = 0$ -------- (2)

Solving equations (1) and (2)

P = 442.9 N -------- **Ans.**

Ex. 4.2 A block of weight 1000 N is kept on a rough inclined surface. A force P is applied parallel to plane to keep the block in equilibrium. Determine range of values of P for which the block will be in equilibrium. ***(MU May 13)***

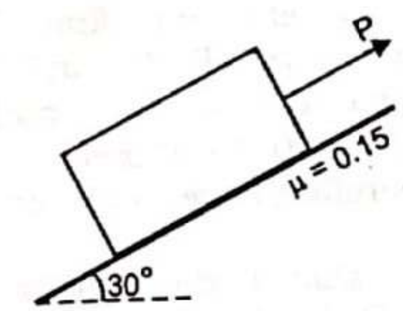

Solution: Since we have to find range of values of P for equilibrium, let us first find P_{min}, which would be just sufficient to prevent the block from moving down the plane. The friction force therefore acts up the plane. Taking the axis as shown

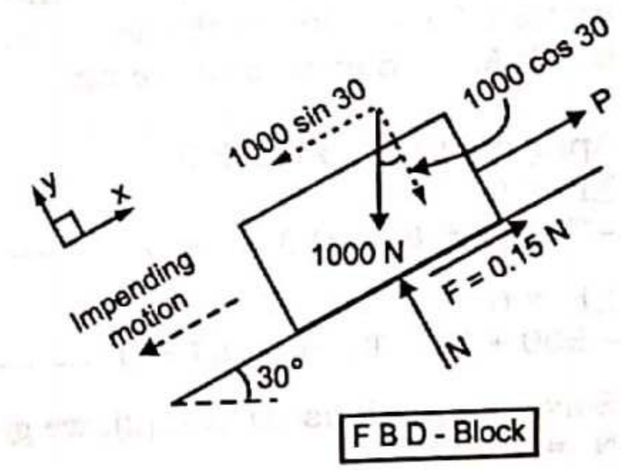

Applying COE

$\Sigma F_y = 0$

$N - 1000 \cos 30 = 0$

$\therefore N = 866$ N

$\Sigma F_x = 0$

$P - 1000 \sin 30 + 0.15 N = 0$

$\therefore P - 1000 \sin 30 + 0.15 (866) = 0$

or $P_{min} = 370.1$ N

When P is maximum for equilibrium of the block, it tends to just cause the block to move up the plane, thereby the friction force acts down the plane.

Applying COE

$\Sigma F_y = 0$

$N - 1000 \cos 30 = 0$

$\therefore \quad N = 866$ N

$\Sigma F_x = 0$

$P - 1000 \sin 30 - 0.15$ N $= 0$

$\therefore \quad P - 1000 \sin 30 - 0.15\,(866) = 0$

or $\quad P_{max} = 629.9$ N

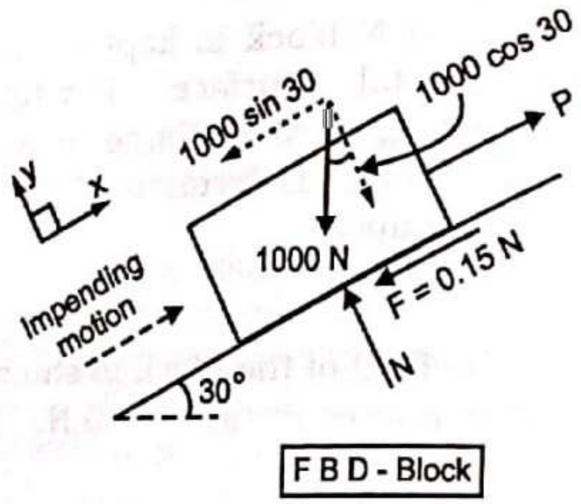

The block is in equilibrium within the range $370.1 \text{ N} \le P \le 629.9$ N ..... **Ans.**

Ex. 4.3 The upper block is tied to a vertical wall by a wire. Determine the horizontal force P required to just pull the lower block. Coefficient of friction for all surfaces is 0.3

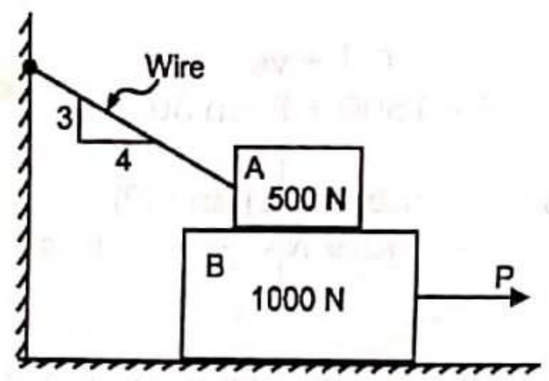

Solution: Figure shows the FBD of the entire system. We find there are three unknowns viz. P, N_1 and T, and we have only two equations of equilibrium $\Sigma F_x = 0$ and $\Sigma F_y = 0$ for dimensionless blocks. We will therefore have to isolate the two blocks.

Figure shows the blocks isolated. Since block B tends to move to the right the friction force acts to the left. Hence for the block A, friction acts to the right.

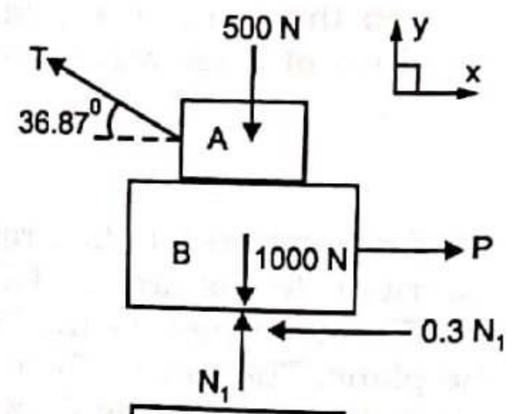

Applying COE to block A

$\Sigma F_x = 0$

$-T \cos 36.87 + 0.3\, N_2 = 0$ -------- (1)

$\Sigma F_y = 0$

$-500 + N_2 + T \sin 36.87 = 0$ -------- (2)

Solving equations (1) and (2), we get

$N_2 = 408.2$ N

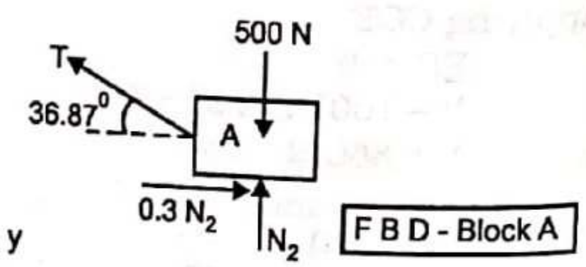

Applying COE to block B

$\Sigma F_y = 0$

$N_1 - N_2 - 1000 = 0$

$\therefore \quad N_1 - 408.2 - 1000 = 0$

or $\quad N_1 = 1408.2$ N

$\Sigma F_x = 0$

$P - 0.3\, N_2 - 0.3\, N_1 = 0$

$\therefore \quad P - 0.3\,(408.2) - 0.3\,(1408.2) = 0$

or $\quad P = 544.9$ N -------- **Ans.**

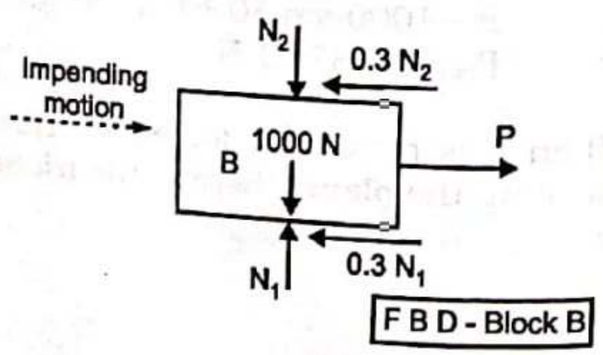

Ex. 4.4 Two blocks weighing W_1 and W_2 are connected by a string passing over a small smooth pulley as shown. If $\mu = 0.3$ for both the planes, find the minimum ratio W_1/W_2 required to maintain equilibrium.

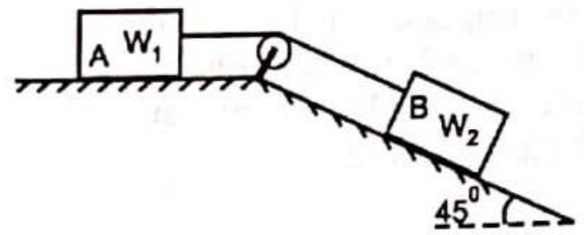

Solution: The component of weight of block B is responsible for causing motion of the system to impend down the plane.

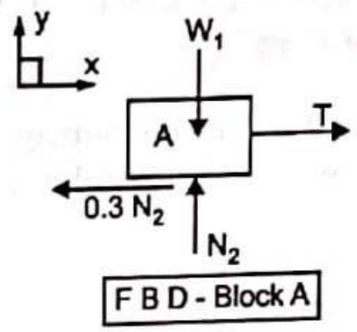

Isolating the two blocks

Taking different axes for A and B as shown

Applying COE to block B

$\Sigma F_y = 0$

$N_1 - W_2 \cos 45 = 0$

$\therefore \quad N_1 = 0.707\, W_2$ --------(1)

$\Sigma F_x = 0$

$T + 0.3\, N_1 - W_2 \sin 45 = 0$

$\therefore \quad T + 0.3\,(0.707\, W_2) - W_2 \sin 45 = 0$

or $\quad T = 0.4949\, W_2$ --------(2)

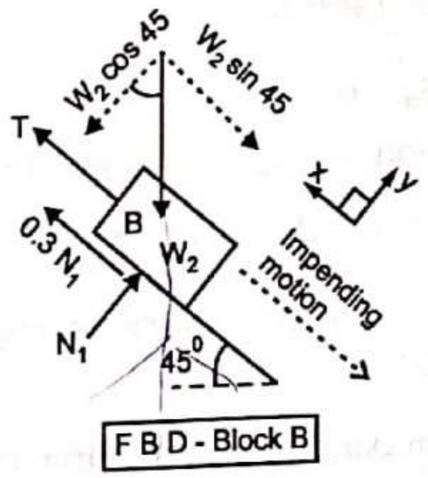

Applying COE to block A

$\Sigma F_y = 0$

$N_2 - W_1 = 0$

$\therefore \quad N_2 = W_1$ --------(3)

$\Sigma F_x = 0$

$T - 0.3\, N_2 = 0$

Substituting values of T and N_2

$0.4949\, W_2 - 0.3\, W_1 = 0$

$\therefore \quad \dfrac{W_1}{W_2} = 1.65$ ---------- **Ans.**

Ex. 4.5 If a horizontal force of 1200 N is applied to block of 1000 N, then block will be held in equilibrium or slide down or move up? Take $\mu = 0.3$.

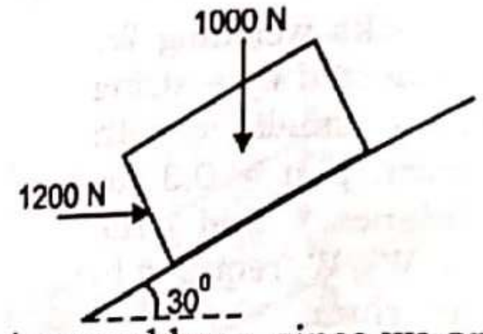

Solution: This problem is different from the previous problems, since we are required to find out the state of the block i.e. whether it is in equilibrium or not. If not, in which direction it is moving.

Let F be the friction force acting down the plane be required to keep the block in equilibrium. Here we cannot take $F = \mu N$ because the block may not be on the verge of motion.

Taking the axes as shown

$\Sigma F_y = 0$

$N - 1000 \cos 30 - 1200 \sin 30 = 0$

$\therefore \quad N = 1466$ N

$\Sigma F_x = 0$

$1200 \cos 30 - 1000 \sin 30 - F = 0$

$\therefore \quad F = 539.2$ ..... $F_{required}$

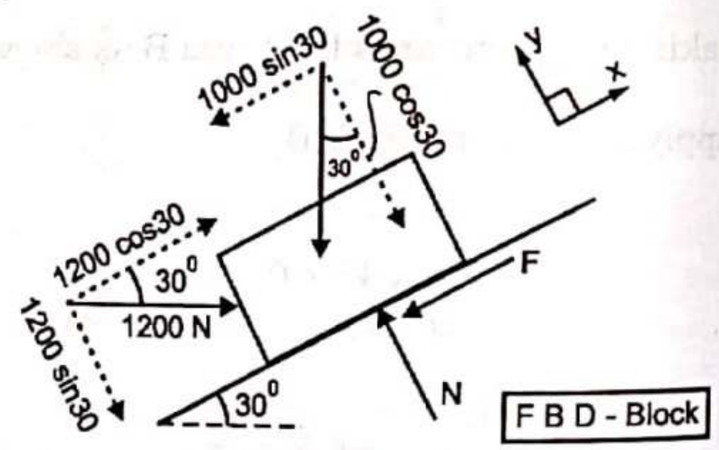

$\therefore$ F = 539.2 N force is required to act down the plane to keep the block in equilibrium.

Now the maximum friction force the contact surface can produce

$= \mu N = 0.3 \times 1466$

$= 439.8$ N ..... $F_{available}$

Since $F_{required} > F_{available}$ the block is not in equilibrium, but is moving up since F is directed down.

Ex. 4.6 Blocks A and B are resting on ground as shown. μ between ground and block is 0.1 and that between A and B is 0.3. Find the minimum value of P in the pan so that motion starts. ***(MU May 13)***

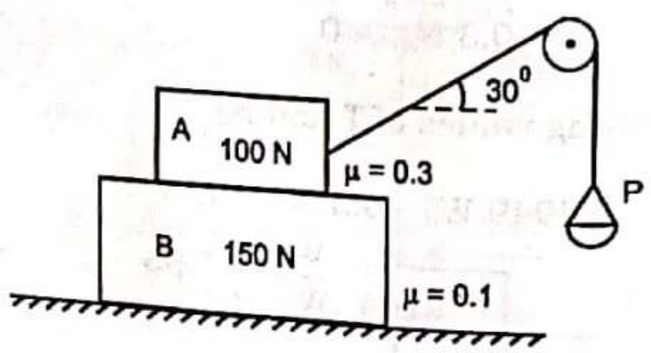

Solution: There are two possibilities. One is that block A moves over block B, while the other possibility is that both blocks A and B move together over the ground.

1st Possibility: Let block A move over block B

Applying COE

$\Sigma F_x = 0$

$P \cos 30 - 0.3\, N_1 = 0$ --------- (1)

$\Sigma F_y = 0$

$N_1 - 100 + P \sin 30 = 0$ --------- (2)

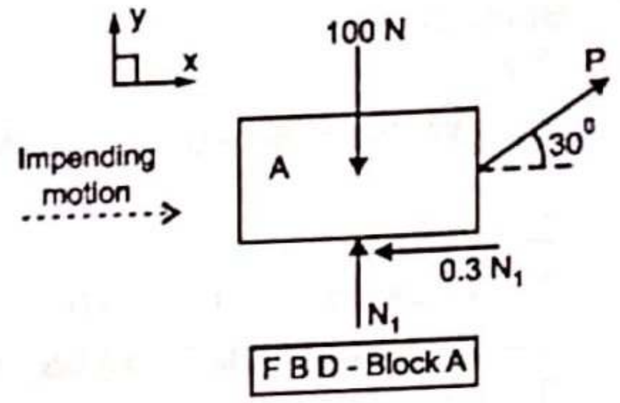

Solving equations (1) and (2)

$P = 29.53$ N

2nd Possibility: Both blocks A and B move together over the ground

Applying COE

$\Sigma F_x = 0$

$P \cos 30 - 0.1\, N_2 = 0$ ----(3)

$\Sigma F_y = 0$

$N_2 - 100 - 150 + P \sin 30 = 0$ ----(4)

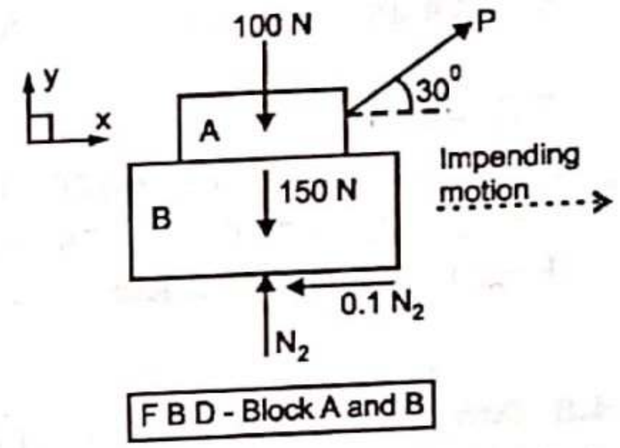

Solving equations (3) and (4)

$P = 27.29$ N

Since P required to move A and B together over the ground is less than P required for A to move over B, the system is set in motion at P = 27.29 N with both blocks moving together. ..... **Ans.**

Ex. 4.7 Determine the force P to cause motion to impend. Take masses A and B as 8 kg and 4 kg respectively and coefficient of static friction as 0.3. The force P and rope are parallel to the inclined plane. Assume smooth pulley. ***(MU Dec 10)***

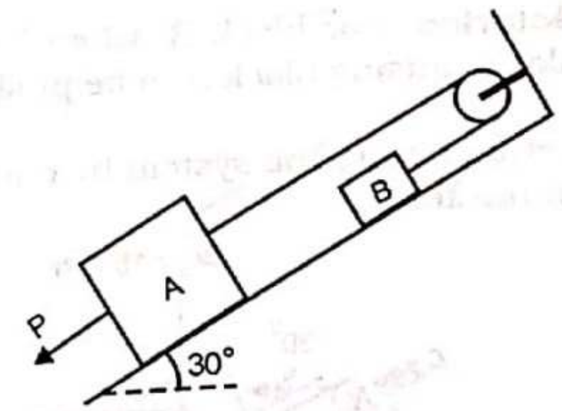

Solution: This is a system of two blocks connected to each other by a rope. As the force P applied to block A, impends to pull it down the plane, the block B impends to travel up the plane.

Isolating Block B

COE – Block B

$\Sigma F_y = 0$

$N_1 - 39.24\cos 30 = 0 \quad \therefore \quad N_1 = 33.98\,N$

$\Sigma F_x = 0$

$T - 39.24\sin 30 - 0.3N_1 = 0$

$T - 39.24\sin 30 - 0.3\times 33.98 = 0$

$\therefore \quad T = 29.81\,N$

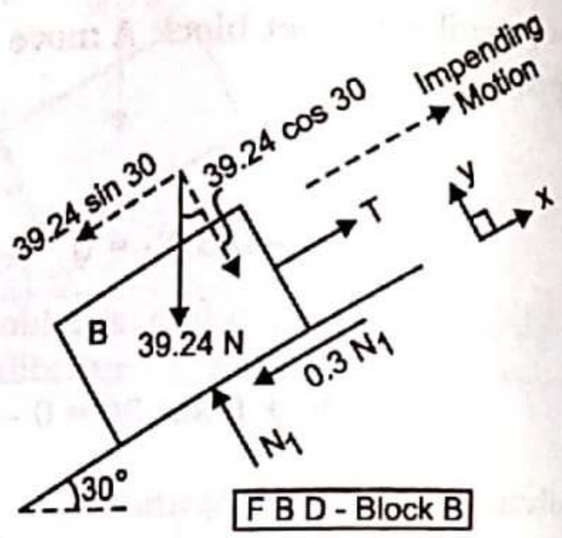

Isolating Block A

COE – Block A

$\Sigma F_y = 0$

$N_2 - 78.48\cos 30 = 0 \quad \therefore \quad N_2 = 67.96\,N$

$\Sigma F_x = 0$

$-P + T + 0.3N_2 - 78.48\sin 30 = 0$

$-P + 29.81 + 0.3\times 67.96 - 78.48\sin 30 = 0$

$\therefore \quad P = 10.96\,N$ ..... **Ans.**

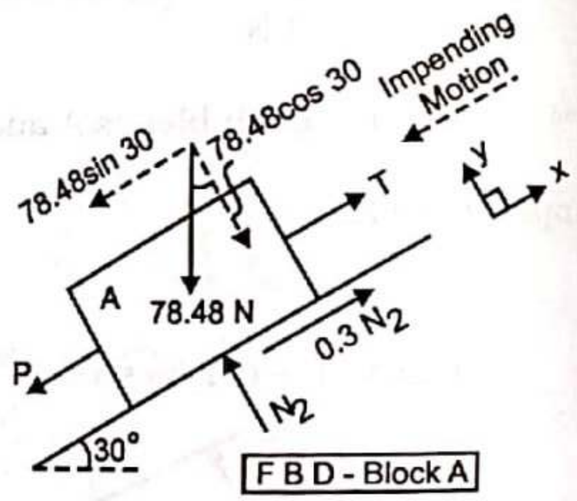

Ex. 4.8 Two blocks A and B are pin connected to a rod as shown. If block A weighs 1500 N, determine the maximum value of weight of block B for which equilibrium of the system is maintained. Angle of friction for all surfaces of contact is 15°.

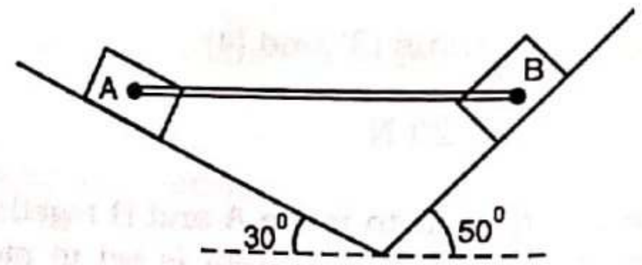

Solution: For block B, when its weight W_B is maximum, it will tend to slide down the slope causing block A to be pushed up its plane.

Let us isolate the system by cutting the rod. Assume force F_{AB} in the rod is compressive in nature.

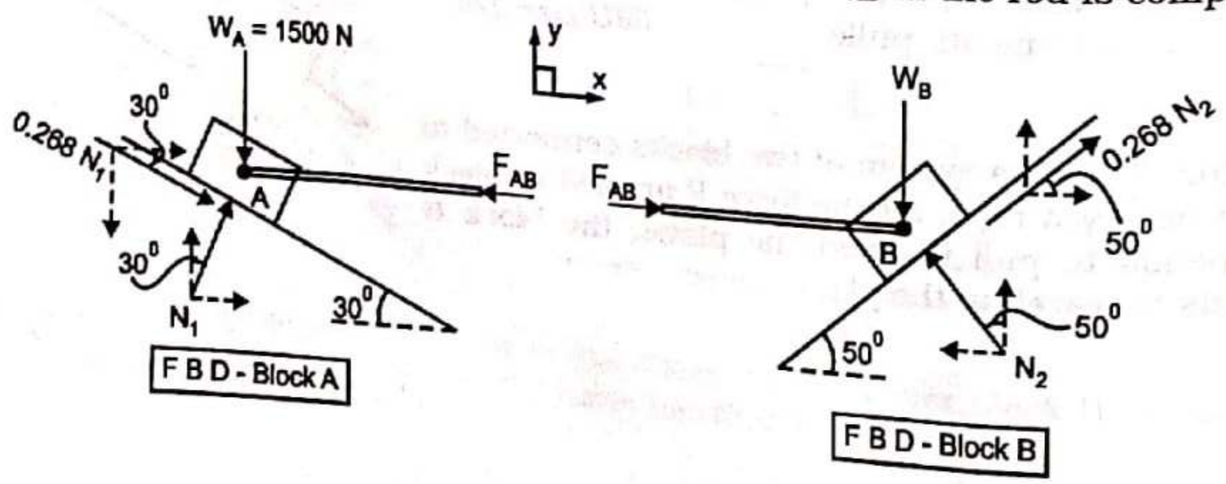

Applying COE to Block A

$\Sigma F_Y = 0$

$N_1 \cos 30 - 0.268\,N_1 \sin 30 - 1500 = 0$

$\therefore \quad N_1 = 2049\,N$

$\Sigma F_X = 0$

$-F_{AB} + 0.268\,N_1 \cos 30 + N_1 \sin 30 = 0$

Substituting $N_1 = 2049$ N, we get

$F_{AB} = 1500$ N

(+ ve value of F_{AB} indicates that force F_{AB} in the rod is compressive as assumed)

Applying COE to Block B

$\Sigma F_X = 0$

$F_{AB} + 0.268\,N_2 \cos 50 - N_2 \sin 50 = 0$

Substituting $F_{AB} = 1500$, we get, $N_2 = 2526.2$ N

$\Sigma F_Y = 0$

$-W_B + N_2 \cos 50 + 0.268\,N_2 \sin 50 = 0$

Substituting $N_2 = 2526.2$ N, we get, $W_{B(maximum)} = 2142.4$ N ..... **Ans.**

Exercise 4.1

P1. For the following cases find force P needed to just impend the motion of the block. Take weight of block to be 100 N and coefficient of static friction at the contact surface to be 0.4.

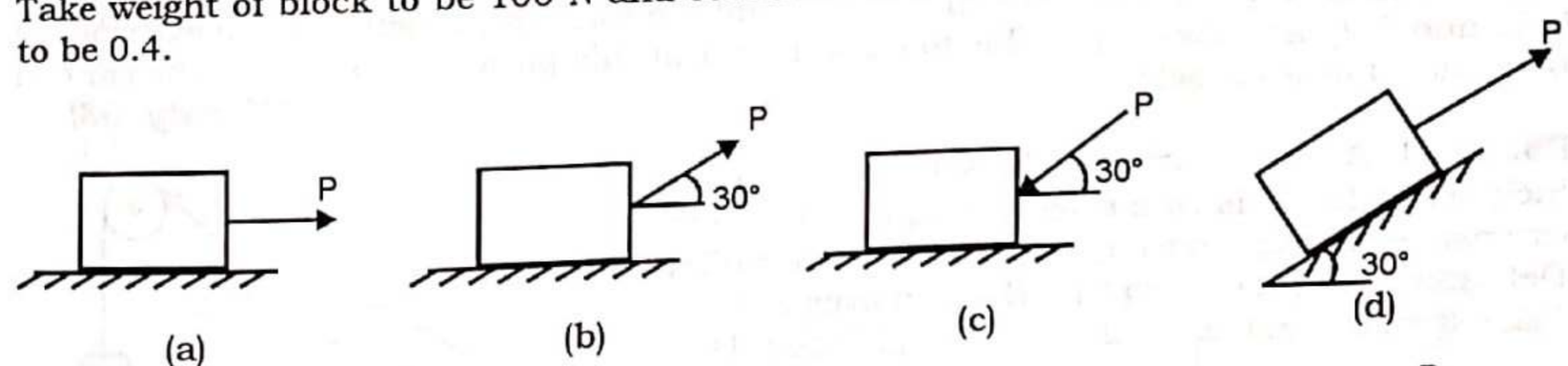

P2. A block weighing 800 N has to rest on an incline of 30°. If the angle of limiting friction is 18°, Find the least and greatest force that need to be applied on the block, parallel to the plane so as to keep the block in equilibrium.

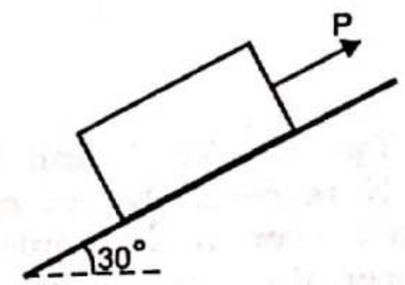

P3. A block of weight 800 N is acted upon by a horizontal force P as shown in figure. If the coefficient of friction between the block and incline are $\mu_s = 0.35$ and $\mu_k = 0.25$, determine the value of P for impending motion up the plane. ***(MU Dec 15)***

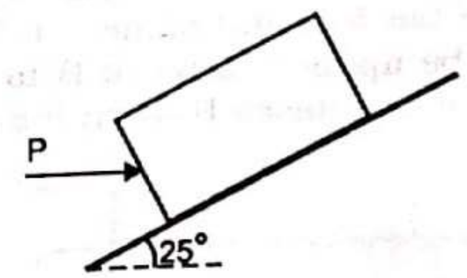

P4. A support block is acted upon by two forces as shown. Knowing $\mu_s = 0.35$ and $\mu_k = 0.25$, determine the force P required

a. to start the block moving up the incline.
b. to keep it moving up.
c. to prevent it from sliding down.

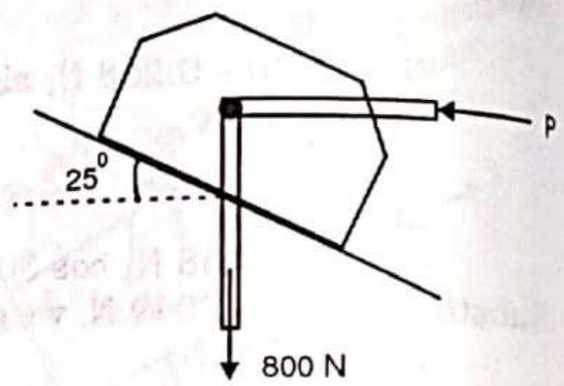

P5. A block of weight 200 N rests on a horizontal surface. The co-efficient of friction between the block and the horizontal surface is 0.4. Find the frictional force acting on the block if a horizontal force of 40 N is applied to the block. ***(MU Dec 09, KJS Dec 17)***

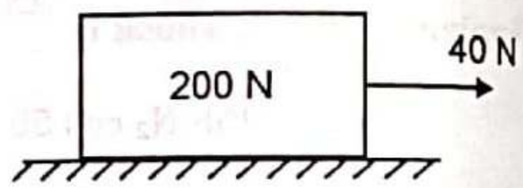

P6. A horizontal force P is applied to the block A of mass 50 kg kept on an inclined plane as shown. If P = 200 N, find whether the block is in equilibrium. Also find the magnitude and direction of frictional force.
Take $\mu_s = 0.25$. ***(SPCE Nov 12)***

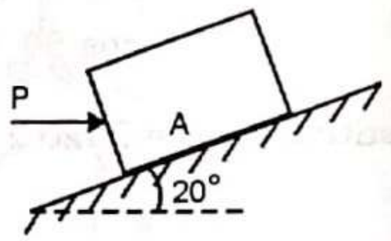

P7. A car of 1000 kg mass is to be parked on the same 10° incline year around. The static coefficient of friction between the tires and the road varies between the extremes of 0.05 and 0.9. Is it always possible to park the car at this place? Assume that the car can be modeled as a particle. ***(MU May 08)***

P8. Block A of weight 2000 N is kept on a plane inclined at 35°. It is connected to weight B by an in-extensible string passing over a smooth pulley. Determine weight of B so that B just moves down.
Take $\theta = 20°$ and $\mu = 0.2$ ***(MU Dec 16)***

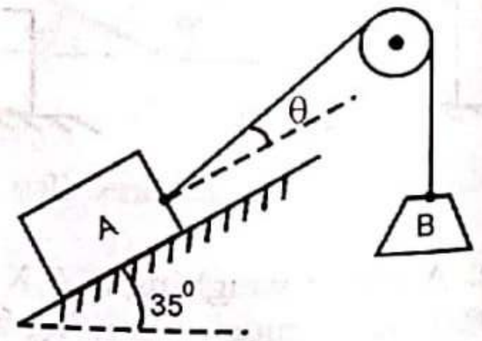

P9. Two blocks A and B of weight 500 N and 750 N respectively are connected by a cord that passes over a frictionless pulley as shown. μ between the block A and plane is 0.4 and between the block B and plane is 0.3. Determine the force P to be applied to block B to produce the impending motion of block B down the plane. ***(MU Dec 09)***

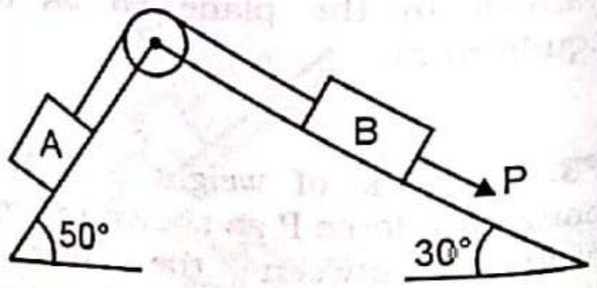

P10. Determine the force P to cause motion to impend. Take masses A and B as 9 kg and 4 kg respectively and coefficient of static friction as 0.25. The force P and rope are parallel to the inclined plane. Assume smooth pulley.

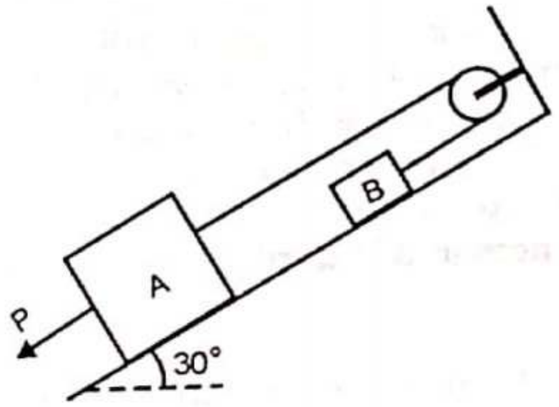

P11. What is the minimum value of mass of block B required to maintain the equilibrium? The rope connecting A and B passes over a frictionless pulley.

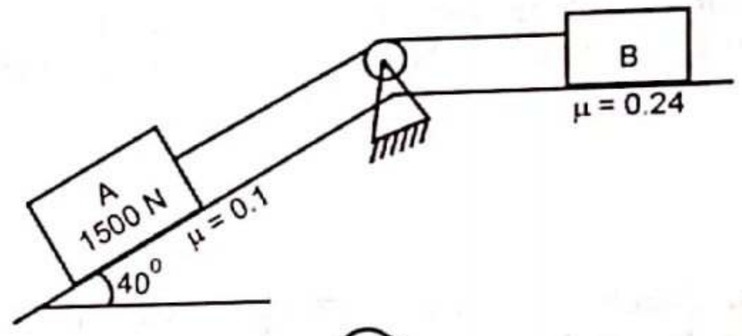

P12. Determine the least and greatest value of weight W of block B for the equilibrium of the whole system.
Take weight of block A = 100 N. ***(VJTI Apr 17)***

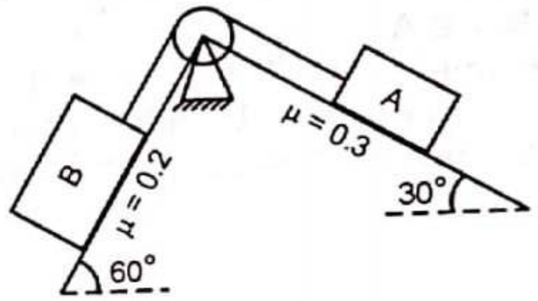

P13. Three blocks are placed on the surface one above the other as shown. The coefficient of friction between the surfaces is shown. Determine the maximum value of P that can be applied before any slipping takes place.
Hint: check for three possibilities. ***(MU May 08)***

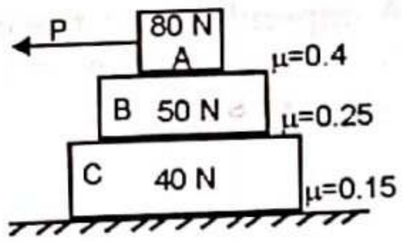

P14. The mass of A is 23 kg and mass of B is 36 kg. The coefficient of friction is 0.4 between A and B and 0.2 between ground and block B. Assume smooth drum. Determine the minimum value of mass M at impending motion. ***(MU May 14)***

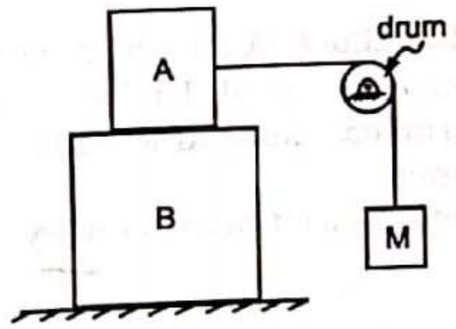

P15. Weights of two blocks A and B are 200 N and 350 N respectively. Find the smallest value of horizontal force F to just move the lower block B, the block A is restrained by string. Coefficient of friction for all contact surfaces = 0.3 ***(NMIMS May 17)***

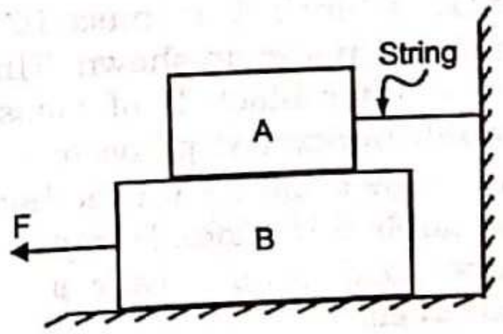

P16. Block A weighing 1000 N rests over a block B weighing 2000 N as shown. Block A is tied to a wall with a horizontal string. If $\mu = 0.25$ between blocks A and B and $\mu = 1/3$ between block B and floor, determine the force P needed to move the block if (a) P is horizontal, (b) P acts at 30° upwards to horizontal. ***(VJTI Dec 11)***

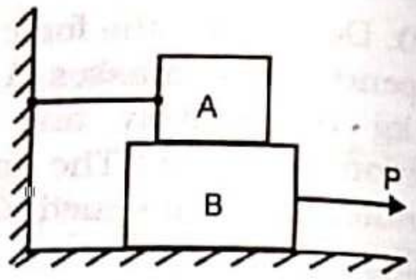

P17. Find force required to pull block B as shown. Coefficient of friction between A and B is 0.3 and between B and floor is 0.25. Mass of A = 40 kg and B = 60 kg. ***(MU Dec 15)***

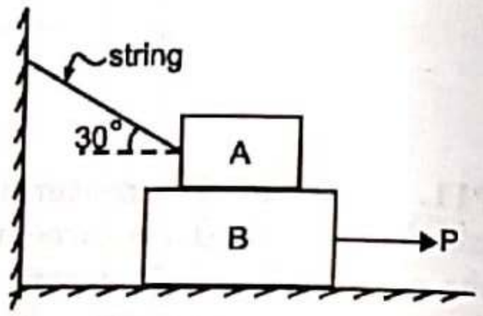

P18. Block A of mass 27 kg rests on block B of mass 36kg. Block A restrained from moving by a horizontal rope to the wall at C. What force P, parallel to the plane inclined at 30° with the horizontal is necessary to start B down the plane? Assume μ for all surfaces = 0.33. ***(VJTI May 08)***

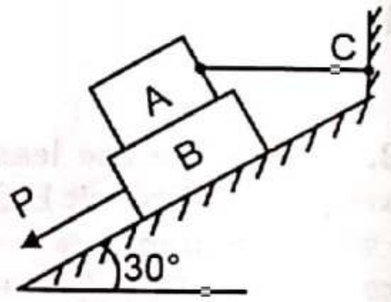

P19. What should be the value of 'θ' so that the motion of block A impends down the plane?
Take m_A = 40 kg and m_B = 13.5 kg.
$\mu = 1/3$ for all surfaces. ***(M. U. Dec 11)***

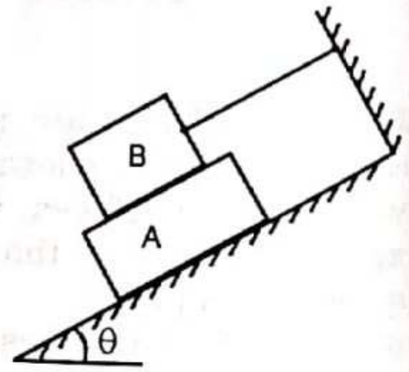

P20. Block A has a mass of 25 kg and block B has a mass of 15 kg. Knowing $\mu_s = 0.2$ for all surfaces, determine value of θ for which motion impends.
Assume frictionless pulley.

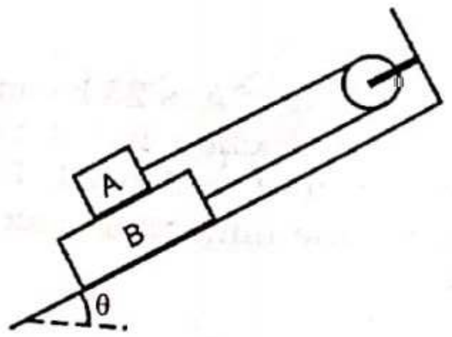

P21. A block A of mass 10 kg rests on a rough inclined plane as shown. This block is connected to another block B of mass 30 kg resting on a rough horizontal plane by a rigid bar inclined at an angle of 30°. Find the horizontal P required to be applied to block B to just move block A in the upward direction. Take $\mu = 0.25$ for all contact surfaces. ***(SPCE Nov 12)***

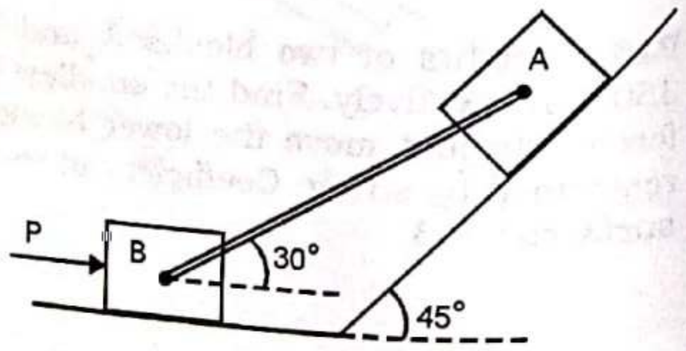

P22. Find the maximum value of W_B for the rod AB to remain horizontal. Also find the corresponding axial force in the rod.
Take $\mu = 0.2$ for all contact surfaces.

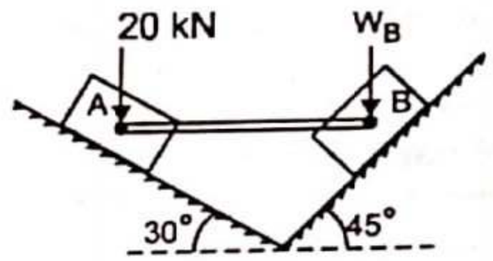

P23. (a) Two blocks connected by a horizontal link AB are supported on two rough planes, μ between block A and horizontal surface is 0.4. The limiting angle of friction between block B and inclined plane is 20°. What is the smallest weight W of the block A for which equilibrium of the system can exist, if the weight of block B is 5 kN? ***(VJTI Mar 11, KJS May 17)***

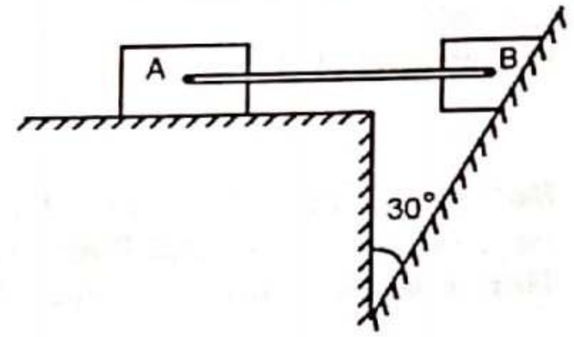

P24. For the figure shown mass of block A is 200 kg. Linkages are smooth. Rod BC is horizontal. The coefficient of friction between block A and plane is 0.2. Calculate moment M to just start the motion of block A up the plane. ***(KJS May 15)***

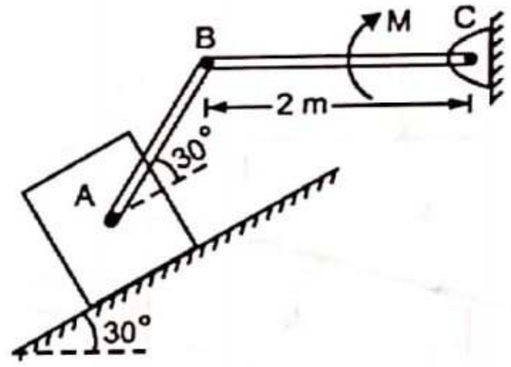

4.7 Wedges

Wedges are tapering shaped devices which are used for lifting or shifting to little extent heavy blocks, machinery, pre-cast beams and columns etc. Usually two or more wedges are used in combination. In Fig. 4.6 (a) two wedges are used for imparting a small vertical movement to heavy machinery of weight W. Effort P is applied to the wedge B which is driven inside causing the vertical movement. In Fig. 4.6 (b) two wedges are used in combination to cause a small horizontal movement to the heavy block of weight W. Effort P is applied to wedge B, driving it down, thereby causing horizontal movement of the heavy block.

For solving problems, we require to isolate the wedges and then apply COE to each wedge separately. Since the dimensions are neglected, wedges are treated as particles forming a concurrent force system. Only two COE viz. $\Sigma F_x = 0$ and $\Sigma F_y = 0$ are useful.

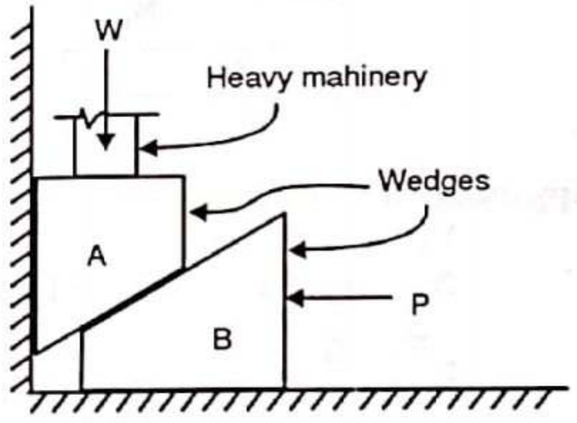

Fig. 4.6 (a)

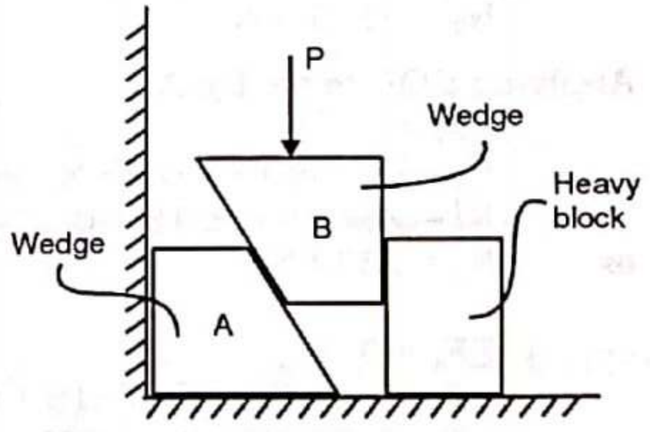

Fig. 4.6 (b)

Ex. 4.9 To raise a heavy stone block weighing 2000 N, the arrangement shown is used. What horizontal force P is necessary to be applied to the wedge in order to raise the block. μ = 0.25. Neglect the weight of the wedges.

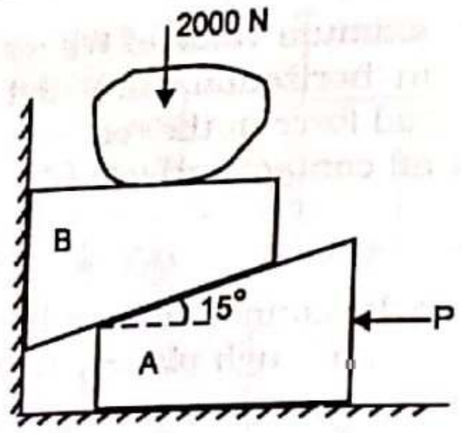

Solution: Figure shows the FBD of the entire system. We find there are three unknowns N_1, N_2 and P and we have two COE viz. $\Sigma F_x = 0$ and $\Sigma F_y = 0$. Hence we will have to isolate the wedges as shown in figure.

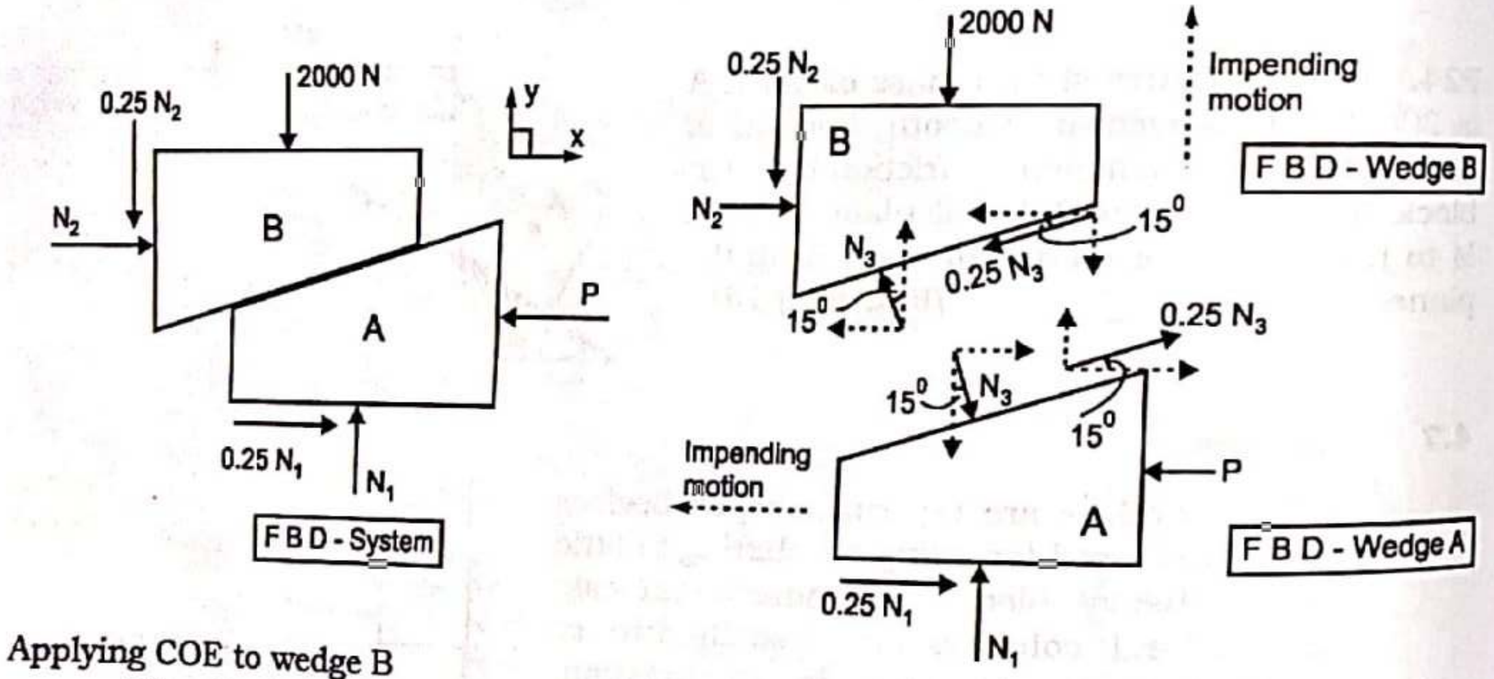

Applying COE to wedge B

$\Sigma F_x = 0$

$N_2 - N_3 \sin 15 - 0.25\, N_3 \cos 15 = 0$ -------- (1)

$\Sigma F_y = 0$

$N_3 \cos 15 - 0.25\, N_3 \sin 15 - 0.25\, N_2 - 2000 = 0$ -------- (2)

Solving equations (1) and (2)

$N_3 = 2576.6$ N

Applying COE to wedge A

$\Sigma F_y = 0$

$N_1 - N_3 \cos 15 + 0.25\, N_3 \sin 15 = 0$

$\therefore$ $N_1 - 2576.6 \cos 15 + 0.25\,(2576.6) \sin 15 = 0$

or $N_1 = 2322$ N

$\Sigma F_x = 0$

$-P + 0.25\, N_1 + N_3 \sin 15 + 0.25\, N_3 \cos 15 = 0$

$\therefore$ $-P + 0.25\,(2322) + 2576.6 \sin 15 + 0.25\,(2576.6) \cos 15 = 0$

or $P = 1869.6$ N

..... **Ans.**

Ex. 4.10 Two 6° wedges are used to push the block horizontally as shown. Calculate the minimum force P required to push the block of weight 10000 N. μ = 0.25 for all surfaces.

(MU Dec 08)

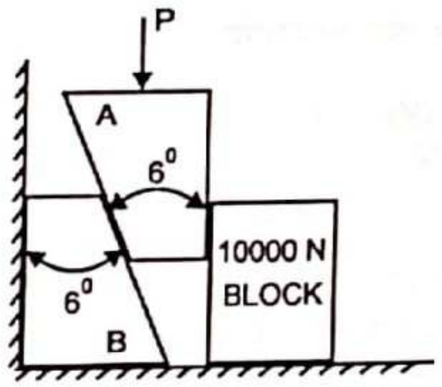

Solution: Figure below shows the FBD of the isolated wedge A and the block.

Applying COE to block

$\Sigma F_x = 0$

$N_2 - 0.25\, N_1 = 0$ -------- (1)

$\Sigma F_y = 0$

$N_1 - 10000 - 0.25\, N_2 = 0$ -------- (2)

Solving equations (1) and (2)

$N_2 = 2666.7$ N

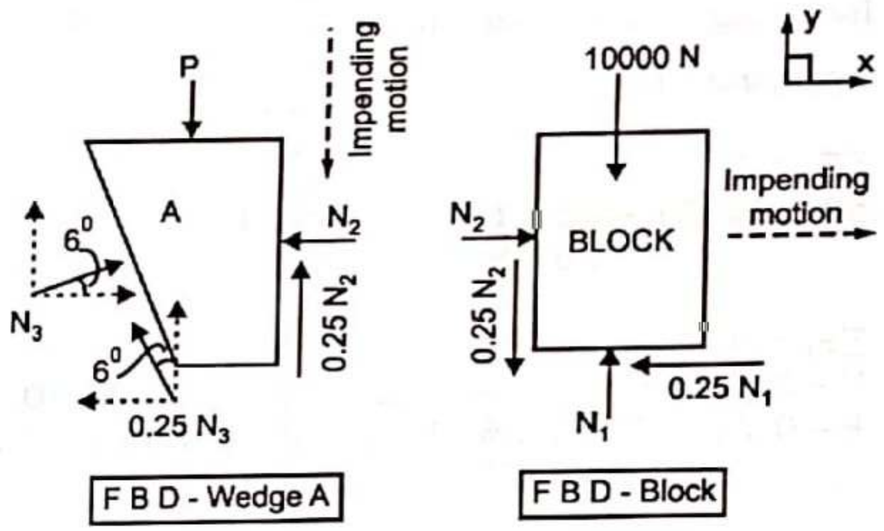

Applying COE to wedge A

$\Sigma F_x = 0$

$N_3 \cos 6 - 0.25\, N_3 \sin 6 - N_2 = 0$

$\therefore$ $N_3 \cos 6 - 0.25\, N_3 \sin 6 - 2666.7 = 0$

or $N_3 = 2753.7$ N

$\Sigma F_y = 0$

$-P + N_3 \sin 6 + 0.25\, N_3 \cos 6 + 0.25\, N_2 = 0$

$\therefore$ $-P + 2753.7 \sin 6 + 0.25\,(2753.7) \cos 6 + 0.25\,(2666.7) = 0$

or $P = 1639.2$ N..... **Ans.**

Ex. 4.11 Calculate the magnitude of the horizontal force P acting on the wedges B and C to raise a load of 100 kN resting on A. μ between wedge and ground is 0.25 and between wedges and A is 0.2. Also assume symmetry of loading and neglect the weights of A, B, and C. Slope of wedges are 1:10.

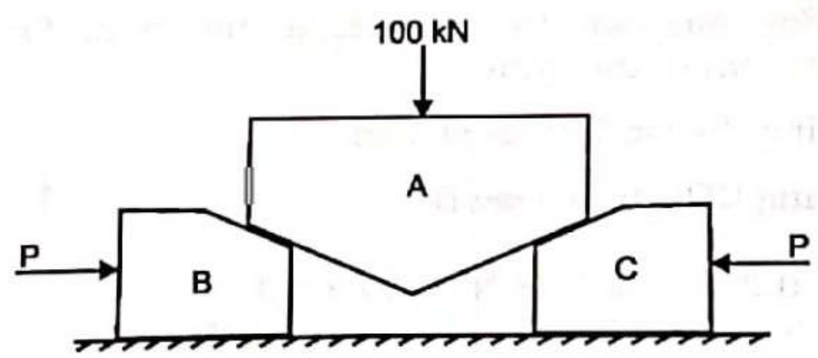

Solution: Figure shows the FBD of the entire system. Because of symmetry of loading, the normal reaction offered by the ground on both the wedges is same.

Applying COE to the system

$\Sigma F_y = 0$

$N + N - 100 = 0$

$N = 50$ kN

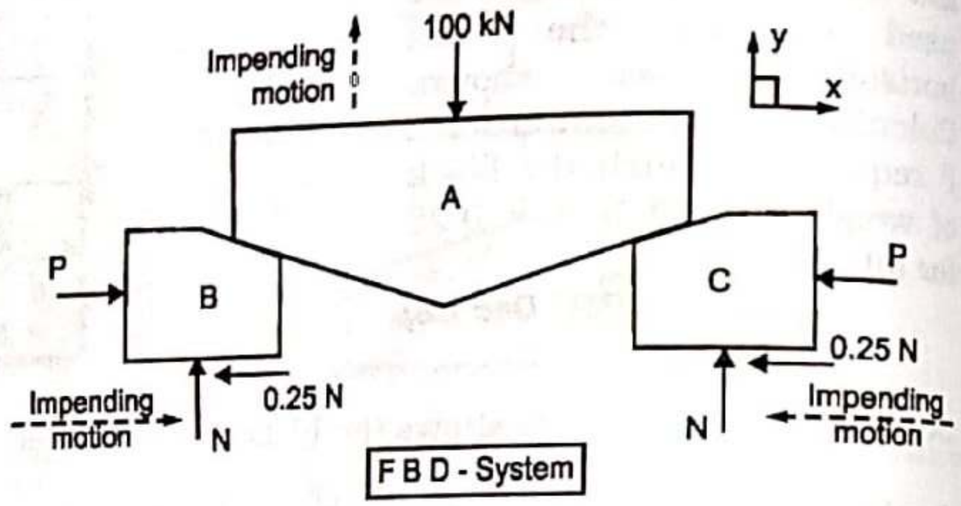

Slope : 1:10

$\therefore$ $\tan\theta = 1/10$

$\therefore$ $\theta = 5.71°$

Isolating wedge B as shown

Applying COE.

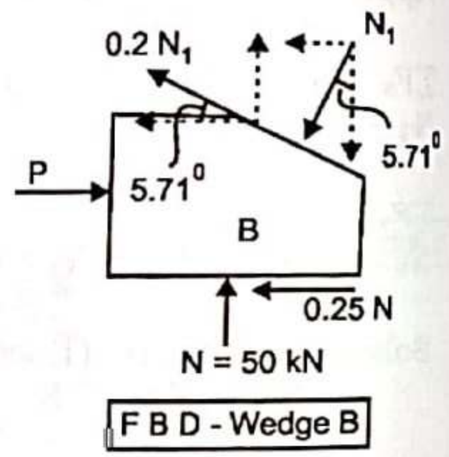

$\Sigma F_y = 0$

$50 + 0.2\,N_1 \sin 5.71 - N_1 \cos 5.71 = 0$

$\therefore$ $N_1 = 51.27$ N

$\Sigma F_x = 0$

$P - 0.2\,N_1 \cos 5.71 - N_1 \sin 5.71 - 0.25\,N = 0$

$P - 0.2\,(51.27) \cos 5.71 - (51.27) \sin 5.71 - 0.25\,(50) = 0$

$\therefore$ $P = 27.8$ kN ..... **Ans.**

Ex. 4.12 Wedges A and B are held in equilibrium by the application of horizontal force P as shown. Find the minimum force P required to do so. Take $\mu = 0.2$ between the wedges, $\mu = 0.25$ between wedge B and wall and $\mu = 0.3$ between wedge A and the floor.

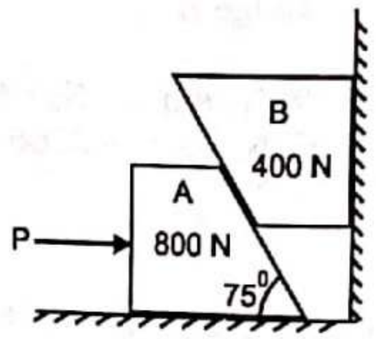

Solution: Imagine the given system when P = 0. In such a case the wedge B would slip down and wedge A would therefore slide to the left. For this not to happen, a minimum force P can prevent this and maintain equilibrium of the system.

Isolating the wedges as shown

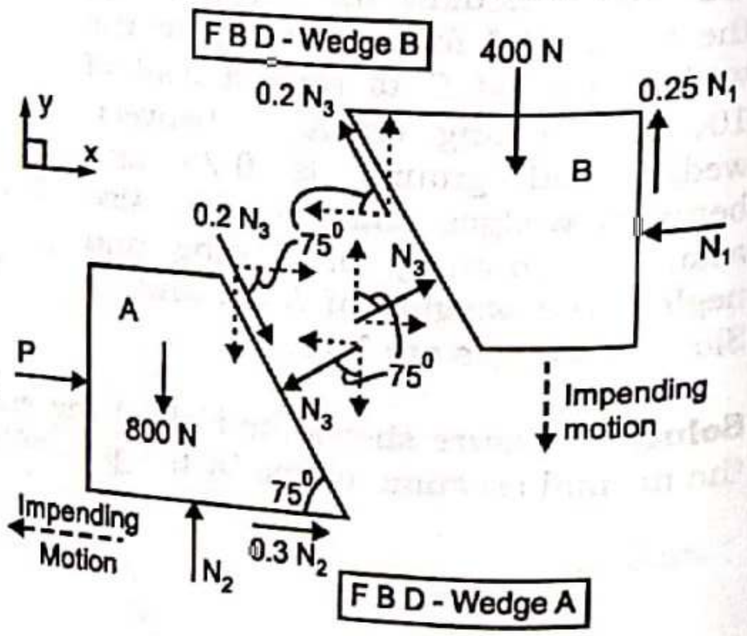

Applying COE to Wedge B

$\Sigma F_X = 0$

$-N_1 - 0.2\,N_3 \cos 75 + N_3 \sin 75 = 0$

$\therefore$ $-N_1 + 0.914\,N_3 = 0$ ..... (1)

$\Sigma F_Y = 0$

$0.25\,N_1 + 0.2\,N_3 \sin 75 + N_3 \cos 75 - 400 = 0$

$\therefore$ $0.25\,N_1 + 0.452\,N_3 = 400$ ..... (2)

Solving equations (1) and (2), we get, $N_1 = 537.25$ N and $N_3 = 587.8$ N

Applying COE to Wedge A

$\Sigma F_Y = 0$

$N_2 - 0.2\,N_3 \sin 75 - N_3 \cos 75 - 800 = 0$

Substituting $N_3 = 587.8$ N, we get $N_2 = 1065.7$ N

$\Sigma F_X = 0$

$P + 0.3\,N_2 + 0.2\,N_3 \cos 75 - N_3 \sin 75 = 0$

Substituting $N_2 = 1065.7$ N and $N_3 = 587.8$ N, we get , $P = 217.6$ N ..... **Ans.**

Exercise 4.2

P1. The horizontal position of the 1000 kg block is adjusted by 6° wedge. If coefficient of friction for all surfaces is 0.6, determine the least value of force P required to move the block.

(NMIMS June 07)

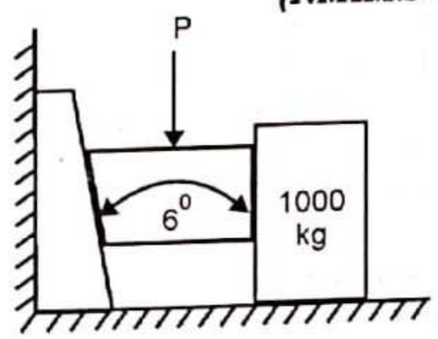

P2. Find force P applied to the wedge B to raise the block A.
μ for all surfaces = 0.3

(NMIMS May 17)

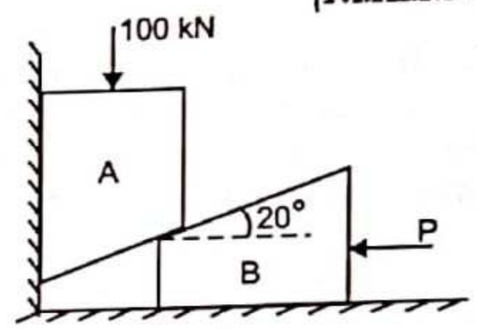

P3. The vertical position of the 200 kg mass I section is being adjusted by two 15° wedges as shown. Find force P to just raise the mass.
Take $\mu = 0.2$ for all surfaces.

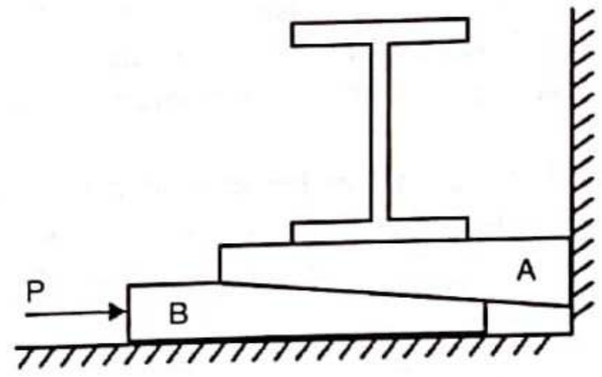

P4. Wedge A supports a load of Q = 5000 N which is to be raised by forcing the wedge B under it. The angle of friction for all surfaces is 15°. Determine the necessary force P to initiate upward motion of the load. Neglect the weight of the wedges.
Hint: Wedge A comes in contact with the right wall and looses contact with left wall as the load gets lifted.

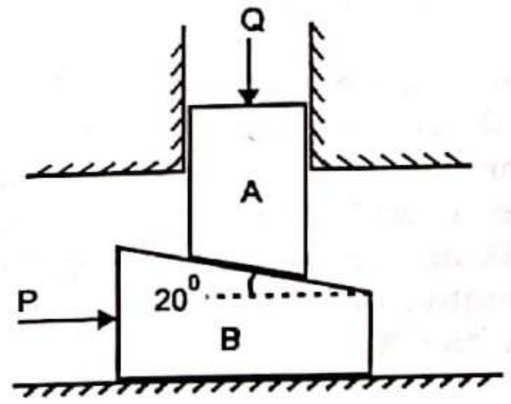

P5. Two blocks A and B are resting against the wall and floor as shown in figure. Find minimum value of P that will hold the system in equilibrium. $\mu = 0.25$ at the floor, $\mu = 0.3$ at the wall and $\mu = 0.2$ between the blocks.

(VJTI Nov 09, MU Dec 12, Dec 16)

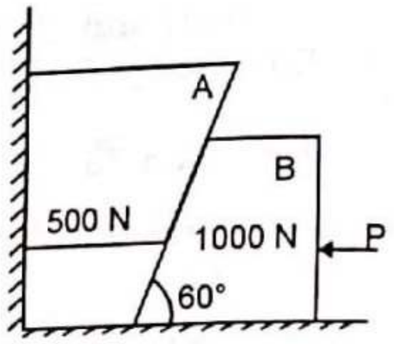

P6. Determine the force P required to move the block A of 5000 N weight up the inclined plane. Coefficient of friction between all contact surfaces is 0.25. Neglect the weight of the wedge and the wedge angle is 15°.

(MU Dec 17)

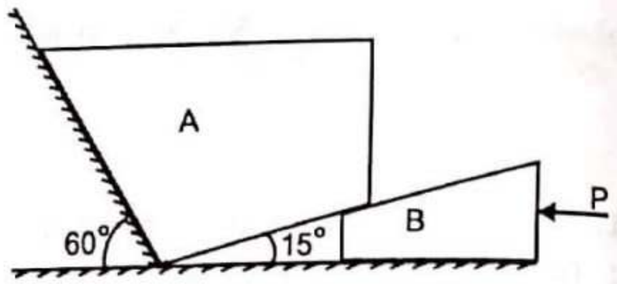

4.8. Problems on Ladders

We have all made use of ladders at one time or the other to reach for things kept high. But every time while climbing the ladder we fear that the ladder might slip. All this is because the friction force at the floor and at the wall is responsible for preventing the slip. If these surfaces do not produce sufficient frictional force the ladder would slip. Invariably we adjust the slope of the ladder and even ask some one to hold the ladder as we use it. The mechanics involving ladders is dealt in this section.

Forces acting on ladder viz. the normal reactions and friction-force at the floor and wall contact points, the weight of the ladder, the weight of the person climbing the ladder and any other force, form a non-concurrent force system. It will therefore require all the three COE viz. $\Sigma F_x = 0$, $\Sigma F_y = 0$ and $\Sigma M = 0$ for analysing the equilibrium of a ladder.

Ex. 4.13 A 12 m ladder is resting against a vertical wall making 30° angle with the wall. Static friction between wall and ladder is 0.3 and that between ground and ladder is 0.25. A 600 N man ascends the ladder. How high will he be able to go before the ladder slips? Assume the weight of the ladder to be 800 N.

Solution: Figure shows the FBD of ladder AB resting against the wall and floor. Let the person climb the distance x on the ladder when the ladder is on the verge of slipping. The weight of the ladder acts through its C.G.

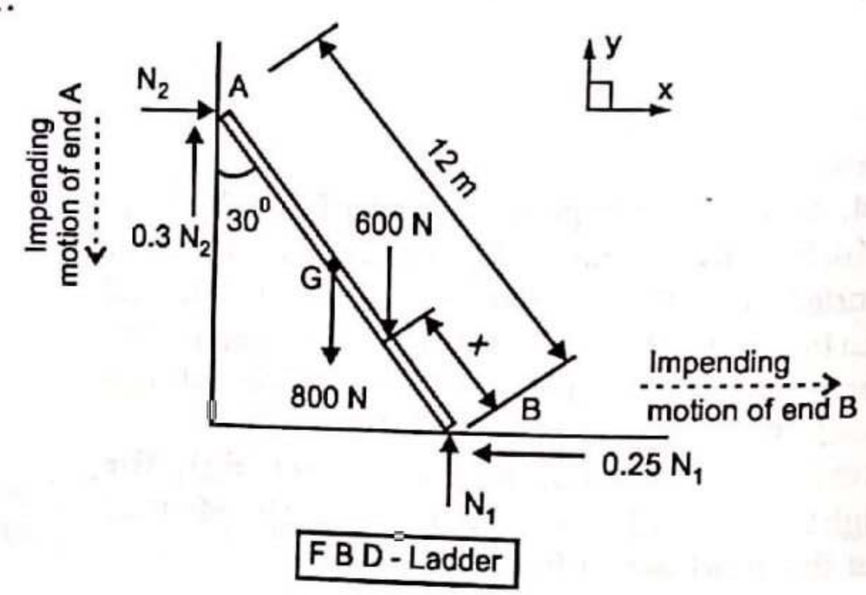

Applying COE to the ladder

$$\Sigma F_x = 0$$

$$N_2 - 0.25\,N_1 = 0 \quad \text{------ (1)}$$

$$\Sigma F_y = 0$$

$$0.3\,N_2 + N_1 - 800 - 600 = 0 \quad \text{------ (2)}$$

Solving equations (1) and (2)

$$N_1 = 1302.4\text{ N}, \quad N_2 = 325.6\text{ N}$$

$$\Sigma M_B = 0 \circlearrowleft + \text{ve}$$

$$-(N_2 \times 12\cos 30) - (0.3\,N_2 \times 12\sin 30) + (800 \times 6\sin 30) + (600 \times x\sin 30) = 0$$

$$\therefore \quad x = 5.23\text{ m} \quad \text{..... Ans.}$$

Ex. 4.14 The rod AB of length 5 m and mass 70 kg is leaning against a wall. Find minimum θ for equilibrium. Take coefficient of friction = 0.25.

(KJS Nov 15)

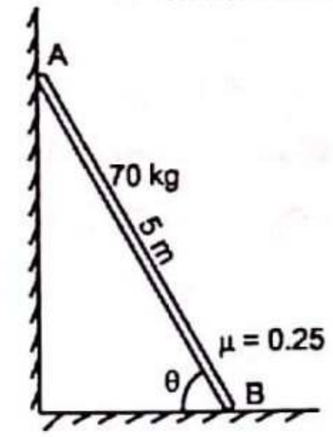

Solution: For minimum value of θ, the ladder impends to slip down and away from the wall.

COE – ladder

$$\Sigma F_x = 0 \rightarrow + \text{ve}$$

$$-0.25\,N_1 + N_2 = 0 \quad \text{..... (1)}$$

$$\Sigma F_y = 0 \uparrow + \text{ve}$$

$$N_1 + 0.25\,N_2 - 686.7 = 0 \quad \text{..... (2)}$$

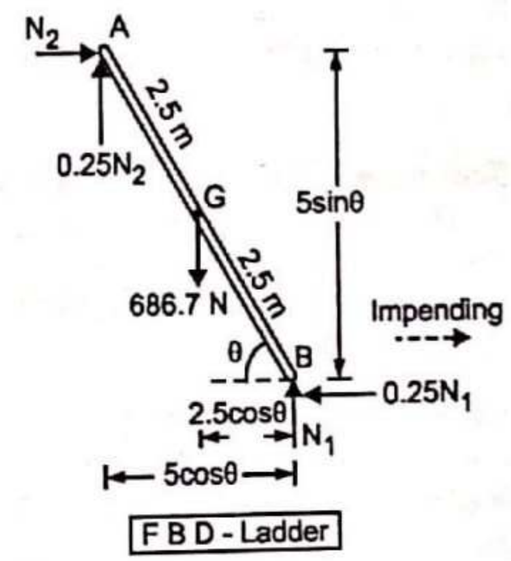

Solving equation (1) and (2), we get

$$N_1 = 646.3\,\text{N} \quad \text{and} \quad N_2 = 161.6\,\text{N}$$

$$\Sigma M_B = 0 \circlearrowleft + \text{ve}$$

$$-(N_2 \times 5\sin\theta) - (0.25\,N_2 \times 5\cos\theta) + (686.7 \times 2.5\cos\theta) = 0$$

$$\therefore \quad -(161.6 \times 5\sin\theta) - (0.25 \times 161.6 \times 5\cos\theta) + 1716.65\cos\theta = 0$$

$$\therefore \quad 1514.75\cos\theta - 808\sin\theta = 0$$

$$\therefore \quad \tan\theta = \frac{1514.75}{808} \quad \text{or} \quad \theta = 61.92° \quad \text{..... Ans.}$$

Ex. 4.15 A non-homogeneous ladder shown rests against a smooth wall at A and a rough horizontal floor at B. The mass of the ladder is 30 kg and is concentrated at 2 m from the bottom. μ_s between ladder and floor is 0.35. Will the ladder stand in 60° position as shown?

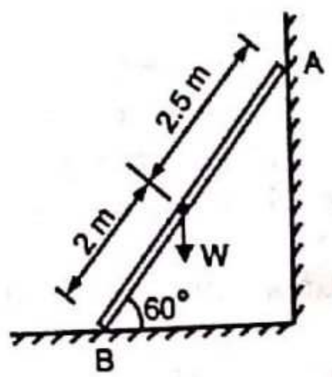

Solution: In this problem the state of the ladder is unknown. Hence we cannot take $F = \mu_s N$. Let F be the friction force required at the ground to prevent the ladder from slipping.

Since the wall at A is smooth it offers a single reaction force R_A.

Applying COE to the ladder

$\Sigma F_x = 0$

$F - R_A = 0$ ---------- (1)

$\Sigma F_y = 0$

$N - 294.3 = 0 \quad \therefore \quad N = 294.3$ N

$\Sigma M_B = 0$ ↺ + ve

$-(294.3 \times 2 \cos 60) + (R_A \times 4.5 \sin 60) = 0$

$\therefore \quad R_A = 75.51$ N

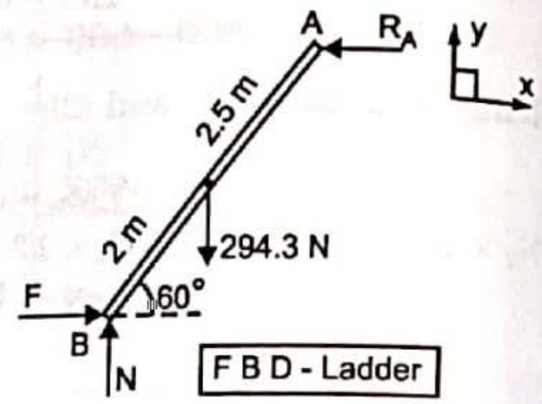

Substituting in equation (1), we get $F = 75.51$ N ... $F_{required}$

The maximum friction force the ground can produce

$F = \mu_s N = 0.35 \times 294.3 \quad \therefore \quad F = 103$ N ... $F_{available}$

Since $F_{required} < F_{available}$ ∴ ladder is in equilibrium and will stand in 60° position. ...**Ans.**

Ex.4.16 Determine minimum value of coefficient of friction so as to maintain the position shown in figure. Length of rod AB is 3.5 m and it weighs 250 N. ***(MU Dec 07)***

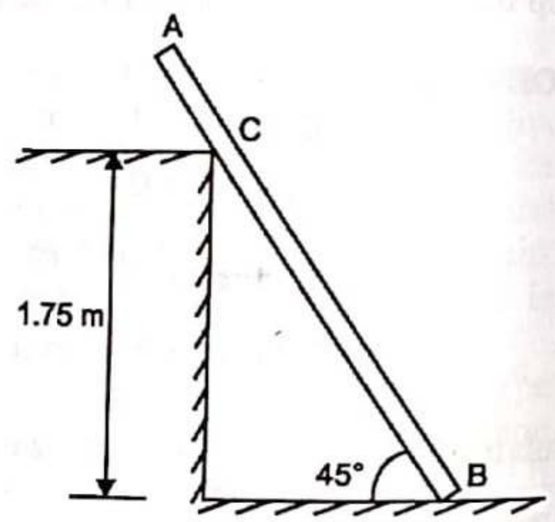

Solution: The rod AB is supported by a rough surface at B and a rough edge at C. Since the ladder looses its equilibrium position by slipping to the right, frictional forces at B and C have to shown opposite to impending motion.

Applying COE to rod AC

$\Sigma M_B = 0$ ↺ + ve

$+(250 \times 1.237) - (N_2 \times 2.475) = 0$

$\therefore \quad N_2 = 125$ N

$\Sigma F_x = 0 \rightarrow$ +ve

$N_2 \cos 45 - \mu N_2 \sin 45 - \mu N_1 = 0$

$\therefore \; 125 \cos 45 - \mu \times 125 \sin 45 - \mu N_1 = 0$

or $\mu (N_1 + 88.39) = 88.39$ ..... (1)

$\Sigma F_y = 0$ ↑ + ve

$N_2 \sin 45 + \mu N_2 \cos 45 + N_1 - 250 = 0$

$\therefore \; 125 \sin 45 + \mu \times 125 \cos 45 + N_1 - 250 = 0$

or $N_1 = 161.61 - 88.39\,\mu$ ..... (2)

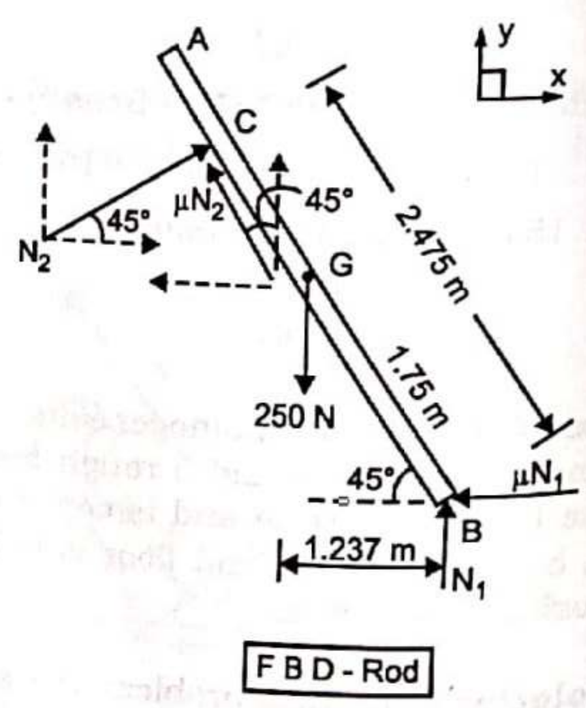

Substituting value of N_1 from equation (2) in (1)

$\mu\,[(161.61 - 88.39\,\mu) + 88.39] = 88.39$

or $-88.39\,\mu^2 + 250\,\mu - 88.39 = 0$

Solving the above quadratic equation, we get $\mu = 0.414$ or 2.414

since μ cannot be greater than 1 selecting the feasible value, we get $\mu = 0.414$..... **Ans.**

Exercise 4.3

P1. A person of weight P = 600 N ascends the 5 m ladder of weight 400 N as shown. How far up the ladder may the person climb before sliding motion of ladder takes place.

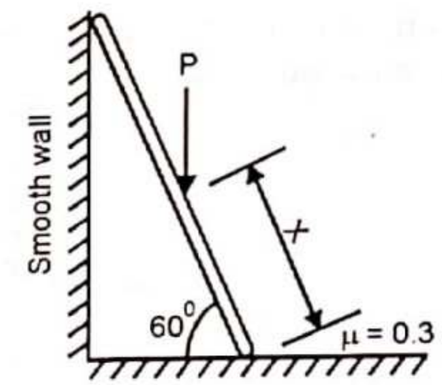

P2. A 100 N uniform ladder AB is held in equilibrium as shown. If μ = 0.15 at A and B, calculate the range of values of P for which equilibrium is maintained.

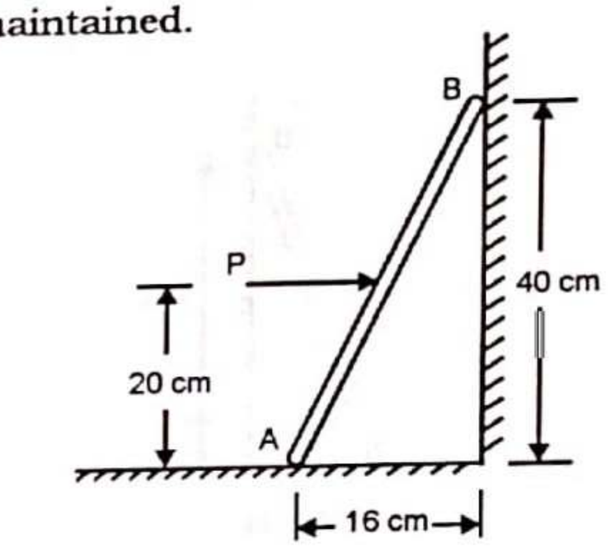

P3. A ladder AB of length 3 m and mass 25 kg is resting against a vertical wall and a horizontal floor. The ladder makes an angle 50° with the floor. A man of mass 60 kg tries to climb the ladder. (a) How much distance along the ladder he will be able to climb if μ between ladder and floor is 0.2 and between ladder and wall is 0.3. (b) also find the angle the ladder should make with the horizontal such that the man can climb till the top of the ladder. ***(M. U. Dec 14)***

P4. A 150 N uniform ladder 4 m long supports a 500 N weight person at its top. Assuming the wall to be smooth, find the minimum coefficient of friction which is required at the bottom rough surface to prevent the ladder from slipping.

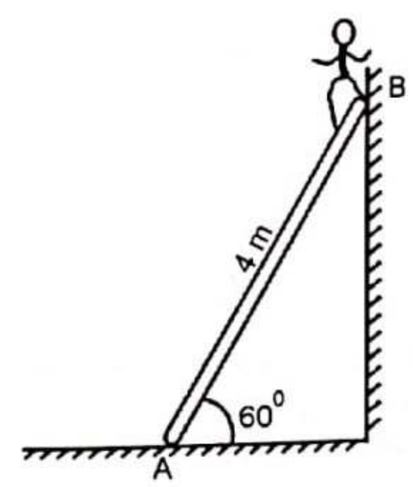

P5. The ladder shown is 6m long and is supported by a horizontal floor and a vertical wall. μ between floor and ladder is 0.4 and between wall and ladder is 0.25. The weight of ladder is 200 N. The ladder also supports a vertical load of 900 N at C. Determine the greatest value of θ for which the ladder may be placed without slipping. ***(VJTI Nov 10)***

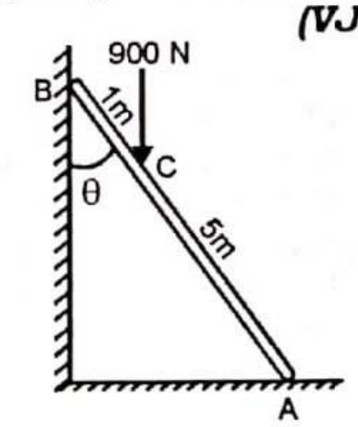

P6. A 6.5 m ladder AB of mass 10kg leans against a wall as shown. Assuming that the coefficient of static friction μ is the same at both surface of contact, determine the smallest value of μ for which equilibrium can be maintained.

(SPCE Dec 10)

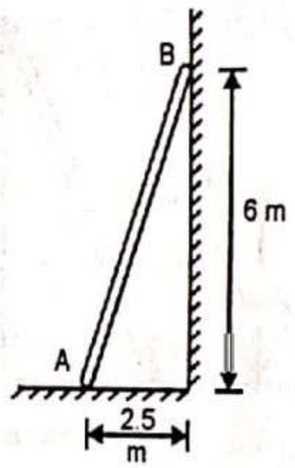

P7. A ladder shown is 4 m long and is supported by a horizontal floor and vertical wall. The coefficient of friction at the wall is 0.25 and that at the floor is 0.5. The weight of ladder is 30 N. It also supports a vertical load of 150 N at 'C'. Determine the least value of 'α' at which the ladder may be placed without slipping to the left.

(VJTI Nov 09)

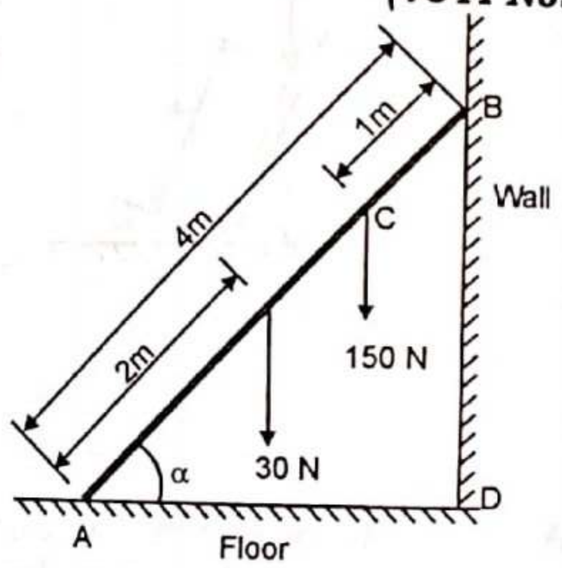

P8. A uniform ladder of length 2.6m and weight 240 N is placed against a smooth vertical wall at A, with its lower end 1 m from the wall on the floor at B. The coefficient of friction between the ladder and the floor is 0.3. Find the frictional force acting on the ladder at the point of contact between the ladder and the floor. Will the ladder remain in equilibrium in this position? Give reason.

(VJTI May 06)

4.9 Tipping

Have you ever tried pushing a cupboard? A person pushing a cupboard finds it convenient to apply the force at a lower position on the cupboard. If the same force is applied at the higher position, the cupboard may tilt or tip over instead of sliding.

To understand the phenomenon of tipping, consider a cupboard resting on the ground as shown in Fig. 4.7 (a). Let us try to push the cupboard with a force P.

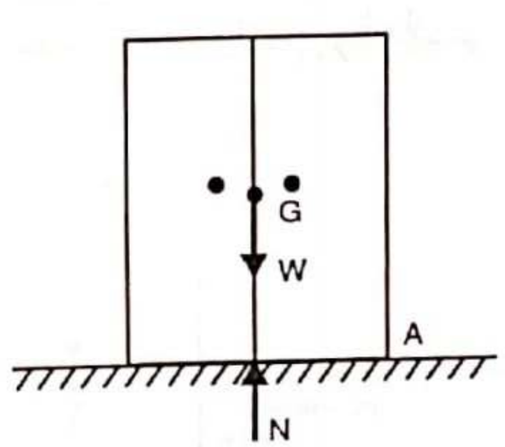

(a) Force P not applied

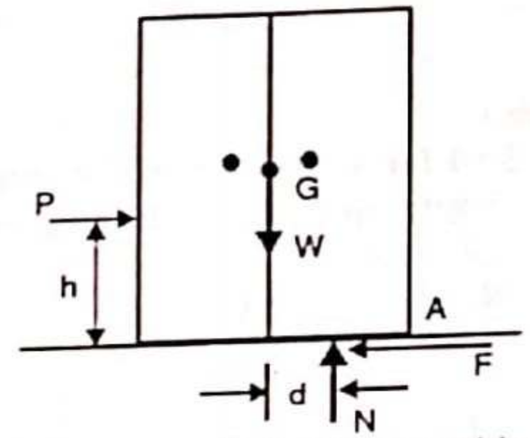

(b) Force P applied at lower position

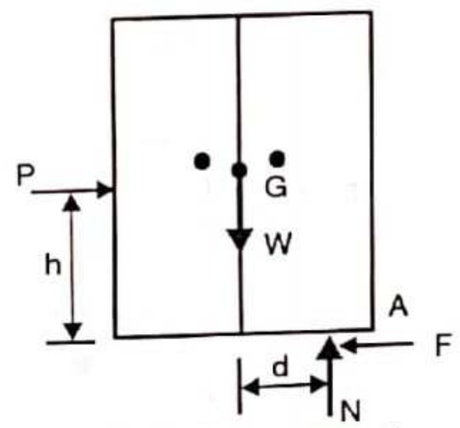

(c) Height h increased

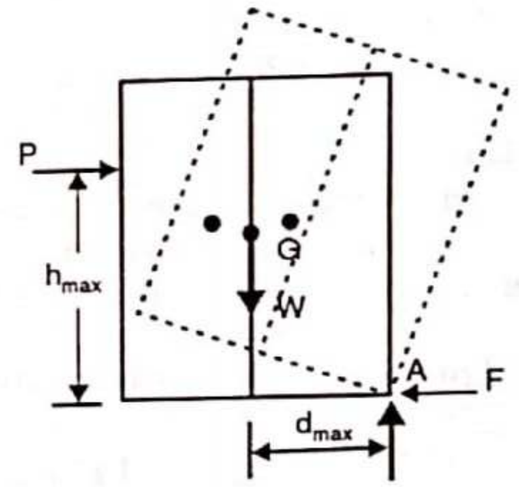

(d) Max. height h upto which P can be applied

Fig. 4.7

The moment force P is applied, friction of the same magnitude i.e. F = P is generated at the ground to maintain the equilibrium. This forms a clockwise couple of magnitude $P \times h$ tending to tip the cupboard. However to counter this, the normal reaction N which is equal to the weight W shifts to right by d and forms an anti-clockwise couple of magnitude $W \times d$ to balance the cupboard such that $W \times d = P \times h$. Refer Fig. 4.7 (b). Now if h is increased, the imbalancing couple also increases such that the reaction N has to further shift to the right to increase the magnitude of balancing couple. Refer Fig. 4.7 (c). However N cannot go beyond the corner A and at this stage if h increases further, the tipping takes place, Fig. 4.7 (d). Hence when the cupboard is on the verge of tipping, the normal reaction N is at the corner for which P is at the maximum height $h = h_{max}$. We can now apply all the three COE to this non-concurrent force system.

Ex. 4.17 A 120 kg cupboard is to be shifted to the right. μ_s between cupboard and floor is 0.3. Determine,

a. The force P required to move the cupboard

b. The largest allowable value of h if the cupboard is not to tip over.

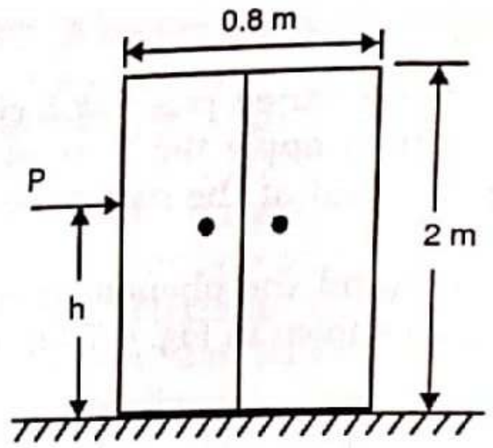

Solution:

a) To find force P to move the cupboard

Applying COE to the cupboard

$\Sigma F_y = 0$

$N - 1177.2 = 0$

$N = 1177.2$ N

$\Sigma F_x = 0$

$P - 0.3\,N = 0$

$P - 0.3 \times 1177.2 = 0$

$\therefore \quad P = 353.2$ N ..... **Ans.**

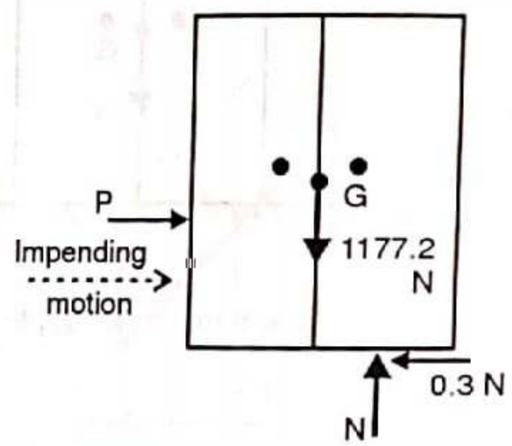

b) To find h_{max}.

At maximum height condition, the cupboard is on the verge of tipping. The normal reaction N shifts to the corner A.

Applying COE to the cupboard

$\Sigma M_A = 0 \quad \circlearrowleft +ve$

$-(353.2 \times h_{max}) + (1177.2 \times 0.4) = 0$

$\therefore \quad h_{max} = 1.33$ m ..... **Ans.**

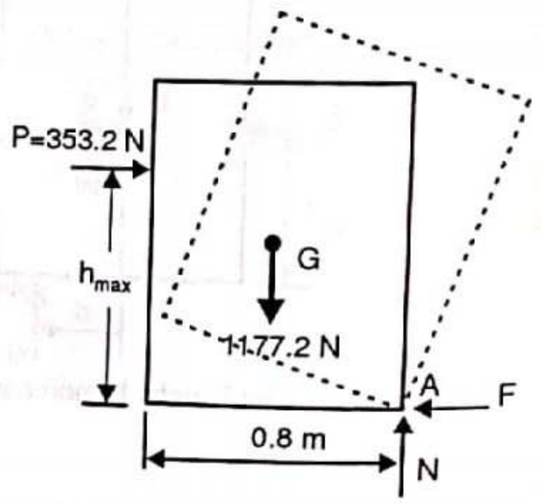

Exercise 4.4

P1. A 1500 N cupboard is to be shifted to the right by a horizontal force P as shown. Find the force P required to just cause the motion and the maximum height upto which it can be applied.

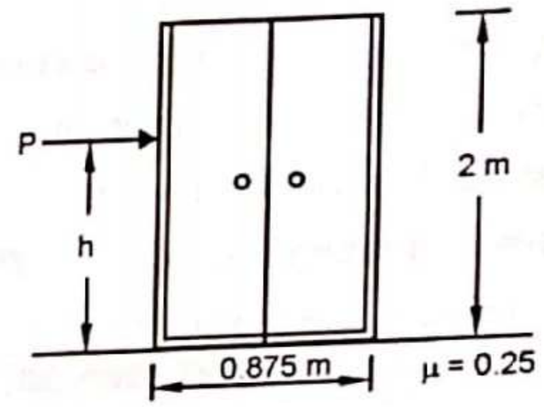

P2. For the block shown in figure, find the minimum value P, which will just disturb the equilibrium of the system. *(MU Dec 12)*

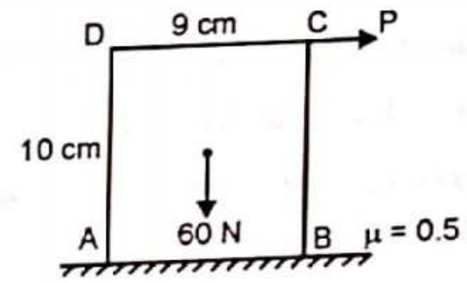

P3. A homogeneous block of weight W rests upon the inclined plane. If $\mu = 0.3$, determine the greatest height h at which a force P parallel to the inclined plane may be applied so that the block will slide up the plane without tipping over.

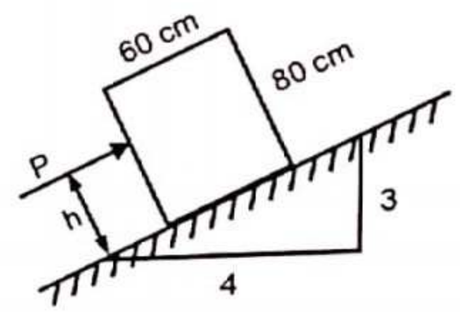

P4. A block weighing 100N, rests on the floor for which the coefficient of static friction is $\mu_s = 0.5$. Determine, if the block slips or tips and the smallest magnitude of force P that will cause impending motion of the block. *(SPCE Dec 10)*

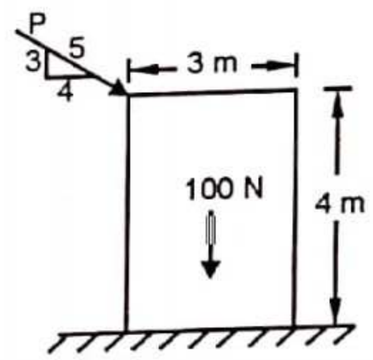

P5. Block A weighing 200 N is connected to another block of weight W by a cord passing over a smooth pulley. The weight W is slowly increased. Find its value for which motion just impends.

Take μ at floor = 0.2

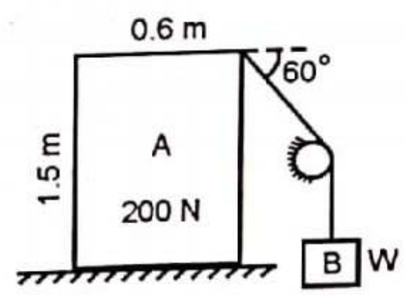

Exercise 4.5

Theory Questions

Q.1 Explain the theory of dry friction.

Q.2 Explain coefficient of friction. ***(MU, VJTI Apr 11, 17)***

Q.3 List the Laws of dry friction. ***(MU Dec 08, 13, VJTI May 10)***

Q.4 What is limiting friction? ***(NMIMS May 17)***

Q.5 a) Define Angle of friction and Angle of Repose.
(MU Dec 11, May 14, Dec 14, VJTI May 10, Apr 11, Dec 11, SPCE Nov 12, KJS May 17)

b) Show Angle of friction is equal to Angle of Repose. ***(MU Dec 14)***

Q.6 What is Cone of friction ? ***(MU, VJTI Apr 11, Dec 11, KJS May 17)***

Q.7 Differentiate between Static and Kinetic friction. ***(VJTI Nov 09)***

★ ★ ★

Chapter 5

Truss

5.1 Introduction

In this chapter we will study about pin connected structures designed to carry loads. The analysis which we will learn forms the basis of further design of the members of the structure. Here we make use of the equilibrium conditions studied earlier and work out not only the unknown external support reaction, but also internal axial forces acting in the members of the structure.

5.2 Definition of Truss

Truss is an engineering structure designed to support loads acting on it. It is formed by thin slender members which are pin connected at the ends forming a joint. The loads act only on the joints and not on the members. Thus the specialty of a truss is that the members are designed to carry only axial forces and not lateral forces.

5.3 Application of Truss

A *Roof Truss* is designed to carry the load of a roof at its top. For example the roof over a railway platform is usually supported on a truss, or industrial sheds have roof truss, even the roof of stadiums is usually supported on truss. There are many other applications of roof truss.

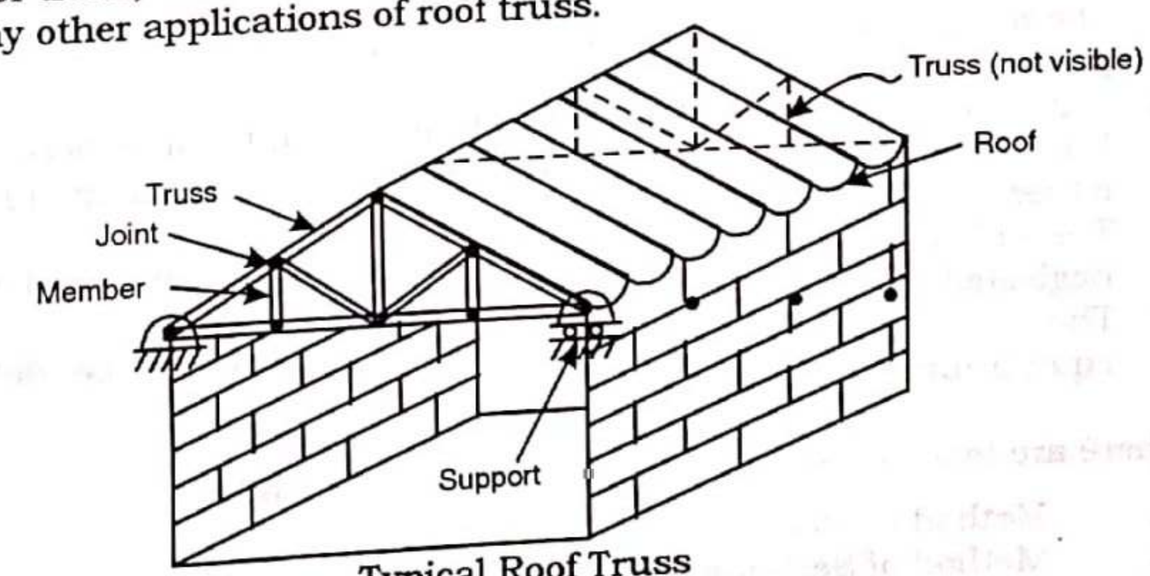

Typical Roof Truss

Fig. 5.1 (a)

A *Bridge Truss* is designed to support the floor of a bridge. Usually railway bridges are steel fabricated truss.

Electrical Transmission Towers are steel trusses in vertical position. They carry the load and tension of the heavy electrical cables supported on them.

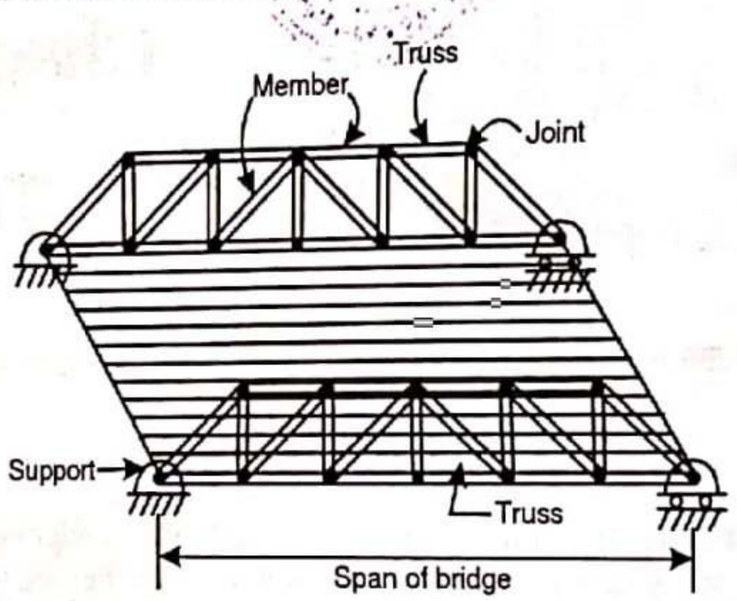

Typical Bridge Truss
Fig. 5.1 (b)

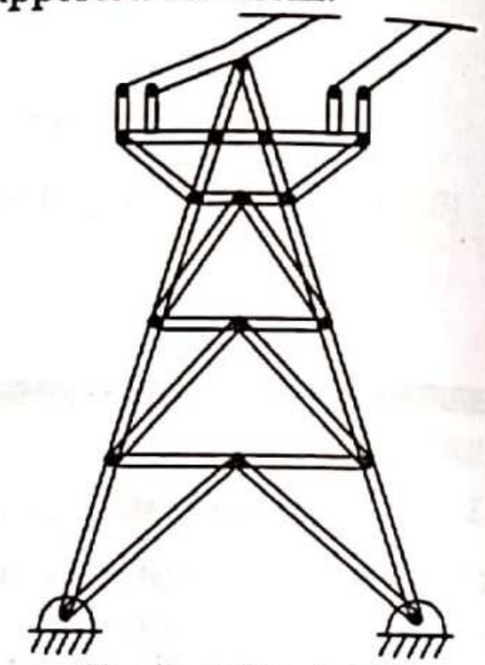

Typical Electrical Transmission Tower
Fig. 5.1 (c)

5.4 Analysis of Truss

Truss analysis involves calculation of the support reactions and then finding the axial forces in various members of the truss. The nature of axial forces i.e tensile or compressive is also found out. After the analysis of truss, the design of members is carried out which involves deciding the best suited cross-section of the member and the corresponding cross-sectional area required. Before we study the various methods of truss analysis, let us discuss the assumptions on which the analysis would be based.

1. All the members of the truss lie in one plane forming what is known as a *plane truss*. Various plane trusses joined together form a *space truss*.
2. All the loads acting on the truss lie in the plane of the truss.
3. The members of the truss are joined at the ends by internal hinges known as pins.
4. Loads act only at the joints and not directly on the members.
5. Each member is a two force body thereby resulting in axial forces which are either tensile or compressive.
6. The self weight of the members being small as compared to the loads, is neglected.
7. The truss is statically determinate i.e. forces can be determined using equilibrium conditions.

There are two methods of analysing truss analytically.

1. Method of Joints
2. Method of Sections

24958
INDIRA GANDHI COLLEGE OF ENGINEERING LIBRARY

5.5 Method of Joints

This method involves applying COE to individual joints after isolating them from the parent truss. This method is based on the principle "If the truss is in equilibrium, an isolated joint of the truss will also be in equilibrium". The following steps are involved while analysing truss by method of joints.

Step 1: Find the reactions at the supports of the truss by applying COE to the entire truss.

Step 2: Isolate a joint from the truss which has not more than two members with unknown force.

Step 3: Assume that the members carry tension force. Based on this assumption show the arrows on the unknown member pointing away from the joint.

Step 4: The forces at the joint form a concurrent force system to which we can apply two COE viz. $\Sigma F_x = 0$ and $\Sigma F_y = 0$ to find the unknown force in the members. If the value obtained is negative it implies that the assumption was incorrect and the member carries compressive force and not tensile force.

Step 5: Mark the magnitude and nature of the force so obtained on the parent truss and now isolate another joint having not more than two members with unknown force. Follow Steps 2–5 as before and thus solve joint after joint to find forces in all the members of the truss.

Step 6: Tabulate the results indicating the member, its force magnitude and the nature of the force.

Ex. 5.1 Using method of joints, analyse the truss shown.

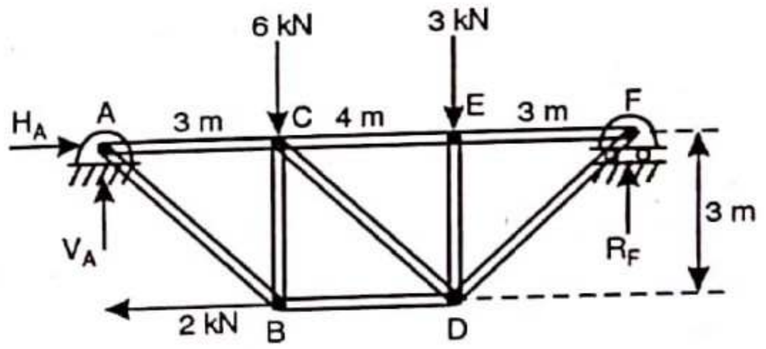

Solution:

Support reactions:

Applying COE to the entire truss

$$\Sigma M_A = 0 \quad + ve$$

$$-(2 \times 3) - (6 \times 3) - (3 \times 7) + (R_F \times 10) = 0$$

$$\therefore \quad R_F = 4.5 \text{ kN} \uparrow$$

$$\Sigma F_x = 0 \rightarrow + ve$$

$$H_A - 2 = 0$$

$$\therefore \quad H_A = 2 \text{ kN} \rightarrow$$

$$\Sigma F_y = 0 \uparrow + ve$$

$$V_A - 6 - 3 + R_F = 0$$

$$V_A - 9 + 4.5 = 0$$

$$\therefore \quad V_A = 4.5 \text{ kN} \uparrow$$

Isolating joint A

Joint A can be isolated since there are two unknown members AB and AC. Initially assuming the members to be in tension

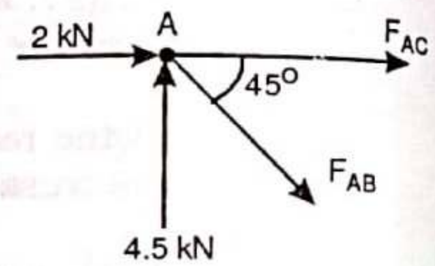

Applying COE

$\Sigma F_y = 0 \uparrow + ve$

$4.5 - F_{AB} \sin 45 = 0$

$\therefore \quad F_{AB} = 6.36$ kN

or $\quad F_{AB} = 6.36$ kN (Tension)

$\Sigma F_x = 0 \rightarrow + ve$

$2 + F_{AC} + F_{AB} \cos 45 = 0$

$2 + F_{AC} + 6.36 \cos 45 = 0$

$\therefore \quad F_{AC} = -6.5$ kN

or $\quad F_{AC} = 6.5$ kN (Compression)

Isolating joint B

This joint has two unknown members BD and BC. Initially assuming them to be in tension.

Applying COE

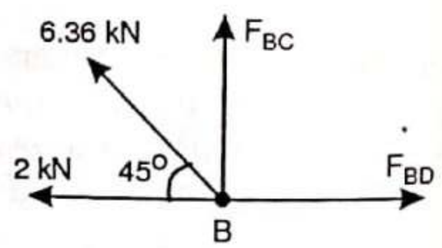

$\Sigma F_x = 0 \rightarrow + ve$

$-2 - 6.36 \cos 45 + F_{BD} = 0$

$\therefore \quad F_{BD} = 6.5$ kN

or $\quad F_{BD} = 6.5$ kN (Tension)

$\Sigma F_y = 0 \uparrow + ve$

$6.36 \sin 45 + F_{BC} = 0$

$\therefore \quad F_{BC} = -4.5$ kN

or $\quad F_{BC} = 4.5$ kN (Compression)

Isolating Joint C

This joint has two unknown members CE and CD. Initially assuming them to be in tension

Applying COE

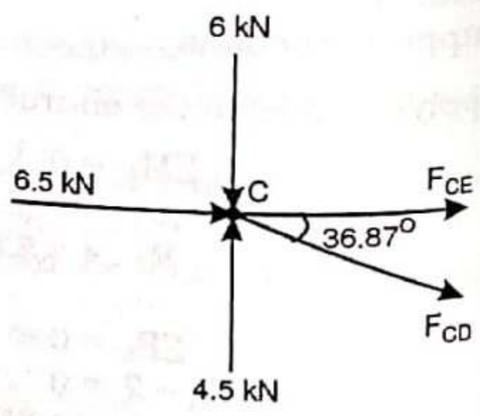

$\Sigma F_y = 0 \uparrow + ve$

$4.5 - 6 - F_{CD} \sin 36.87 = 0$

$\therefore \quad F_{CD} = -2.5$ kN

or $\quad = 2.5$ kN (Compression)

$\Sigma F_x = 0 \rightarrow + ve$

$6.5 + F_{CD} \cos 36.87 + F_{CE} = 0$

$6.5 + (-2.5) \cos 36.87 + F_{CE} = 0$

$\therefore \quad F_{CE} = -4.5$ kN

or $\quad F_{CE} = 4.5$ kN (Compression)

Isolating Joint E

This joint has two unknown members EF and ED. Initially assuming the members to be in tension

Applying COE

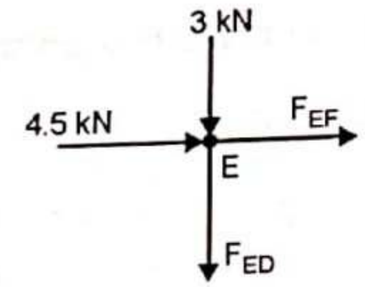

$\Sigma F_x = 0 \rightarrow + ve$

$4.5 + F_{EF} = 0$

$\therefore \quad F_{EF} = -4.5$ kN

or $\quad F_{EF} = 4.5$ kN (Compression)

$\Sigma F_y = 0 \uparrow + ve$

$-3 - F_{ED} = 0$

$\therefore \quad F_{ED} = -3$ kN

or $\quad F_{ED} = 3$ kN (Compression)

Isolating joint F

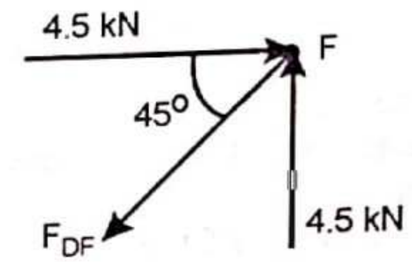

This joint has only one unknown member DF. Initially assuming the member to be in tension.

Applying COE

$\Sigma F_x = 0 \rightarrow + ve$

$4.5 - F_{DF} \cos 45 = 0$

$\therefore \quad F_{DF} = 6.36$ kN

or $\quad F_{DF} = 6.36$ kN (Tension)

Finally tabulating the results.

Member	Force (kN)	Nature
AB	6.36	T
AC	6.5	C
BD	6.5	T
BC	4.5	C
CD	2.5	C
CE	4.5	C
EF	4.5	C
ED	3	C
DF	6.36	T

Ex. 5.2 For the truss shown find the forces in all the members.

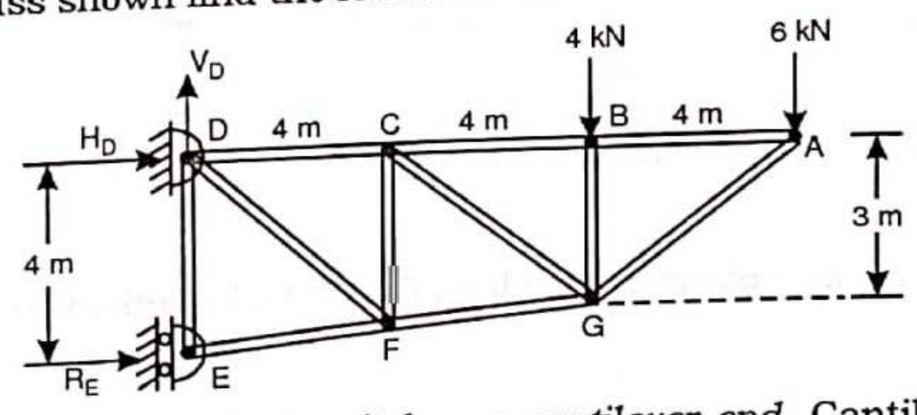

Solution: This truss is special since it has a *cantilever end*. Cantilever end is a joint having only two members and is externally unsupported. Analysis of a truss having a cantilever end need not begin from finding the reactions. One can start solving from the cantilever end.

The cantilever end of the given truss is joint A.

Isolating joint A.

This Joint has two unknown members AB and AG. Initially assuming them to be in tension.

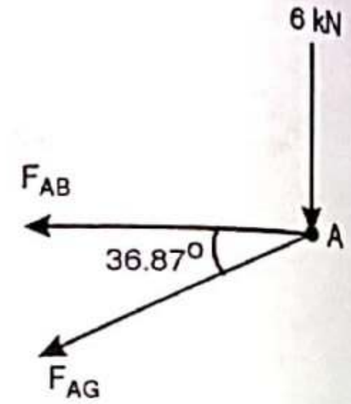

Applying COE

$\Sigma F_y = 0 \uparrow + ve$

$-6 - F_{AG} \sin 36.87 = 0$

$\therefore \quad F_{AG} = -10$ kN or $F_{AG} = 10$ kN (Compression)

$\Sigma F_x = 0 \rightarrow + ve$

$-F_{AB} - F_{AG} \cos 36.87 = 0$

$-F_{AB} - (-10) \cos 36.87 = 0$

$\therefore \quad F_{AB} = 8$ kN or $F_{AB} = 8$ kN (Tension)

Isolating joint B

This joint has two unknown members BC and BG. Initially assuming them to be in tension.

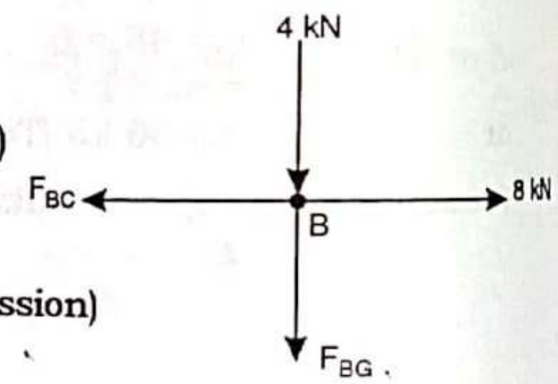

Applying COE

$\Sigma F_x = 0 \rightarrow + ve$

$-F_{BC} + 8 = 0$

$\therefore \quad F_{BC} = 8$ kN or $F_{BC} = 8$ kN (Tension)

$\Sigma F_y = 0 \uparrow + ve$

$-4 - F_{BG} = 0$

$\therefore \quad F_{BG} = -4$ kN or $F_{BG} = 4$ kN (Compression)

Isolating joint G

This joint has two unknown members CG and GF. Initially assuming them to be in tension.

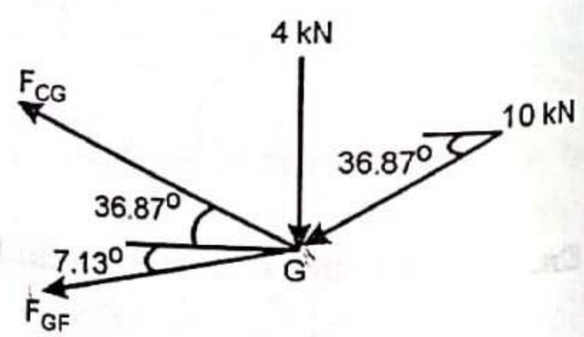

Applying COE

$\Sigma F_x = 0 \rightarrow + ve$

$-F_{CG} \cos 36.87 - F_{GF} \cos 7.13 - 10 \cos 36.87 = 0$

$\therefore \quad 0.8F_{CG} + 0.99 F_{GF} + 8 = 0$ ---------- (1)

$\Sigma F_y = 0 \uparrow + ve$

$F_{CG} \sin 36.87 - F_{GF} \sin 7.13 - 4 - 10 \sin 36.87 = 0$

$\therefore \quad 0.6F_{GF} - 0.124 F_{GF} - 10 = 0$ ---------- (2)

Solving equations (1) and (2), we get

$F_{CG} = 12.85 = 12.85$ kN (Tension)

$F_{GF} = -18.47 = 18.47$ kN (Compression)

Isolating joint C

This joint has two unknown members CD and CF. Initially assuming them to be in tension.

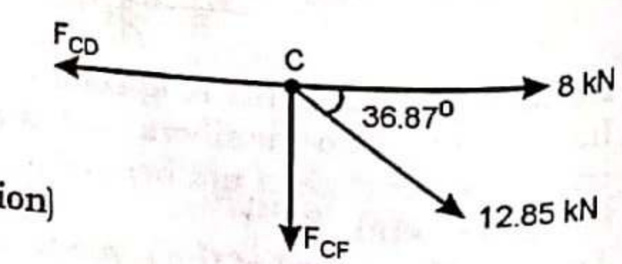

Applying COE

$\Sigma F_x = 0 \rightarrow + ve$

$-F_{CD} + 12.85 \cos 36.87 + 8 = 0$

$\therefore \quad F_{CD} = 18.28$ kN or $F_{CD} = 18.28$ kN (Tension)

$\Sigma F_y = 0 \uparrow + ve$

$-F_{CF} - 12.85 \sin 36.87 = 0$

$\therefore \quad F_{CF} = -7.71$ kN or $F_{CF} = 7.71$ kN (Compression)

Isolating joint F

This joint has two unknown members DF and EF. Initially assumig them to be in tension.

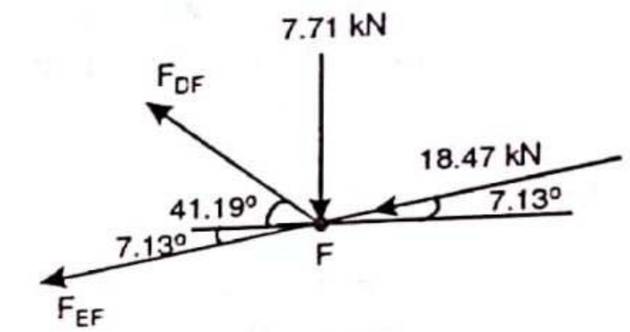

Applying COE

$\Sigma F_x = 0 \rightarrow + ve$

$-F_{EF} \cos 7.13 - F_{DF} \cos 41.19 - 18.47 \cos 7.13$

$\therefore \quad -0.99 F_{EF} - 0.752 F_{DF} - 18.33 = 0$ -------- (3)

$\Sigma F_y = 0 \uparrow + ve$

$-F_{EF} \sin 7.13 + F_{DF} \sin 41.19 - 18.47 \sin 7.13 - 7.71 = 0$

$\therefore \quad -0.124 F_{EF} + 0.658 F_{DF} - 10 = 0$ --------- (4)

Solving equations (3) and (4)

$F_{EF} = -26.2$ kN $= 26.2$ kN (Compression)

$F_{DF} = 10.24$ kN $= 10.24$ kN (Tension)

Isolating joint E

This joint has two unknowns, reaction R_E and unknown member DE. Initially assuming member DE to be in tension.

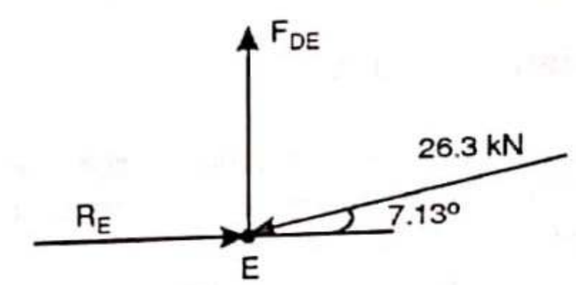

Applying COE

$\Sigma F_x = 0 \rightarrow + ve$

$R_E - 26.3 \cos 7.13 = 0$

$\therefore \quad R_E = 26$ kN

or $\quad R_E = 26$ kN $\rightarrow$

$\Sigma F_y = 0 \uparrow + ve$

$F_{DE} - 26.3 \sin 7.13 = 0$

$\therefore \quad F_{DE} = 3.25$ kN

or $\quad F_{DE} = 3.25$ kN (Tension)

Finally tabulating the results.

Member	Force (kN)	Nature
AB	8	T
AG	10	C
BC	8	T
BG	4	C
CG	12.85	T
GF	18.47	C
CD	18.28	T
CF	7.71	C
DF	10.24	T
EF	26.2	C
DE	3.25	T

Ex. 5.3 For the given truss
a) Find support reactions
b) Find forces in all the members.

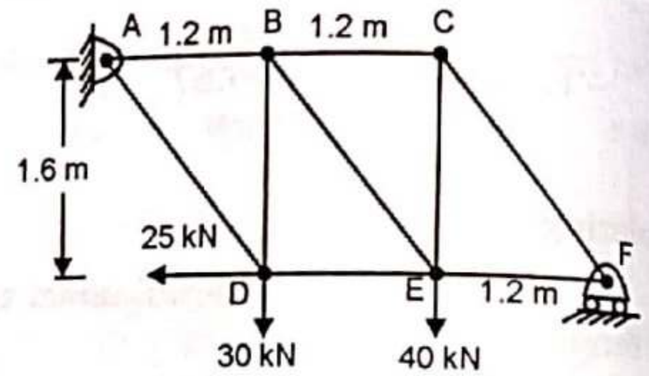

Solution: Figure shows the F.B.D. of the truss.

Applying COE to the entire truss

$\Sigma M_A = 0$ ↺ + ve

$-(25 \times 1.6) - (30 \times 1.2)$
$-(40 \times 2.4) + (R_F \times 3.6) = 0$

∴ $R_F = 47.78$ kN

or $R_F = 47.78$ kN ↑ ..... **Ans.**

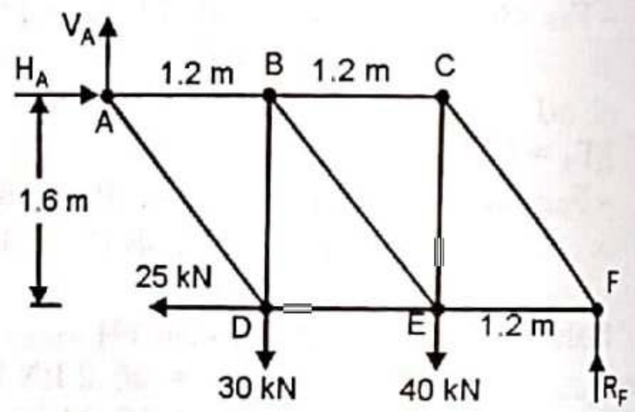

$\Sigma F_X = 0$ → + ve

$H_A - 25 = 0$

∴ $H_A = 25$ kN

or $H_A = 25$ kN → ..... **Ans.**

$\Sigma F_Y = 0$ ↑ + ve

$V_A - 30 - 40 + 47.78 = 0$

∴ $V_A = 22.22$ kN

or $V_A = 22.22$ kN ↑ ..... **Ans.**

Using Method of Joints to find forces in all members.

Isolating joint A

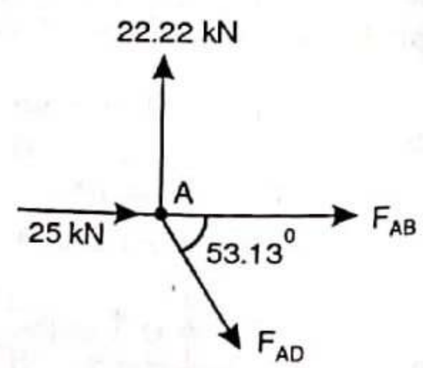

This joint has two unknown members AB and AD.
Initially assuming them to be in tension.
Applying COE

$\Sigma F_Y = 0$ ↑ + ve

$-F_{AD} \sin 53.13 + 22.22 = 0$

∴ $F_{AD} = 27.77$ kN or $F_{AD} = 27.77$ kN (Tension)

$\Sigma F_X = 0$ → + ve

$F_{AB} + F_{AD} \cos 53.13 + 25 = 0$

$F_{AB} + 27.77 \cos 53.13 + 25 = 0$

∴ $F_{AB} = -41.66$ kN or $F_{AB} = 41.66$ kN (Compression)

Isolating joint D

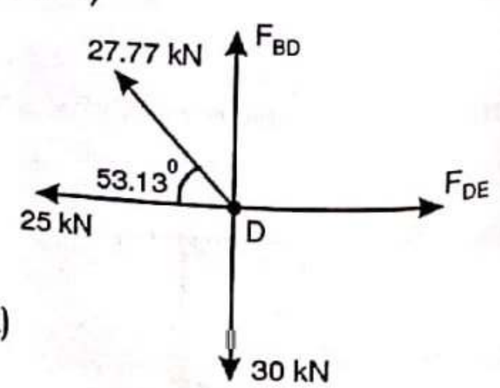

This joint has two unknown members BD and DE.
Initially assuming them to be in tension.
Applying COE

$\Sigma F_X = 0$ → + ve

$F_{DE} - 25 - 27.77 \cos 53.13 = 0$

∴ $F_{DE} = 41.66$ kN or $F_{DE} = 41.66$ kN (Tension)

$\Sigma F_Y = 0$ ↑ + ve

$F_{BD} - 30 + 27.77 \sin 53.13 = 0$

∴ $F_{BD} = 7.784$ kN or $F_{BD} = 7.784$ kN (Tension)

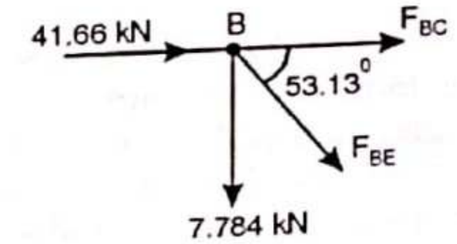

Isolating joint B
This joint has two unknown members BC and BE.
Initially assuming them to be in tension.
Applying COE

$\Sigma F_Y = 0$ ↑ + ve

$-F_{BE} \sin 53.13 - 7.784 = 0$

∴ $F_{BE} = -9.73$ kN or $F_{BE} = 9.73$ kN (Compression)

$\Sigma F_X = 0$ → + ve

$41.66 + F_{BC} + F_{BE} \cos 53.13 = 0$

$41.66 + F_{BC} + (-9.73) \cos 53.13 = 0$

∴ $F_{BC} = -35.82$ kN or $F_{BC} = 35.82$ kN (Compression)

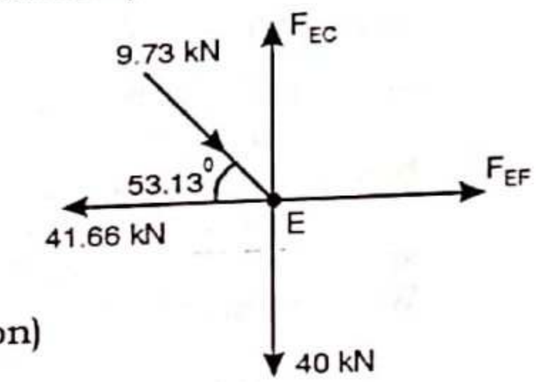

Isolating joint E
This joint has two unknown members EF and EC.
Initially assuming them to be in tension.
Applying COE

$\Sigma F_X = 0$ → + ve

$F_{EF} + 9.73 \cos 53.13 - 41.66 = 0$

∴ $F_{EF} = 35.82$kN or $F_{EF} = 35.82$ kN (Tension)

$\Sigma F_Y = 0$ ↑ + ve

$F_{EC} - 40 - 9.73 \sin 53.13 = 0$

∴ $F_{EC} = 47.78$ kN or $F_{EC} = 47.78$ kN (Tension)

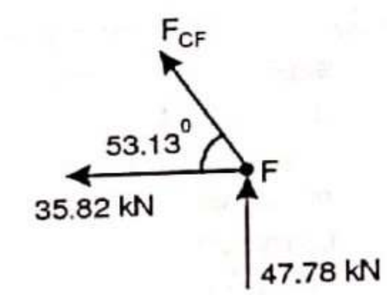

Isolating joint F
This joint has only one unknown member CF.
Initially assuming this to be in tension.

Applying COE

$\Sigma F_X = 0$ → + ve

$-F_{CF} \cos 53.13 - 35.82 = 0$

∴ $F_{CF} = -59.7$ kN

or $F_{CF} = 59.7$ kN (Compression)

Finally Tabulating the results:

Member	Force (kN)	Nature
AD	27.77	T
AB	41.66	C
BD	7.784	T
DE	41.66	T
BE	9.73	C
BC	35.82	C
EF	35.82	T
EC	47.78	T
CF	59.7	C

5.6 Special Cases

There are certain special cases which if identified and used, lead to quicker solution. These special cases are discussed below.

Case 1: "If three members meet at a joint of which two are collinear, and there is no load at the joint, then the third member is a zero force member and the collinear members have the same force in magnitude and nature".

Fig. 5.2 (a) shows a joint J formed by three members AJ, BJ and CJ. Member AJ is collinear with BJ and there is no load at the joint, then by special *Case 1* we have,

$F_{CJ} = 0$

and $F_{AJ} = F_{BJ}$

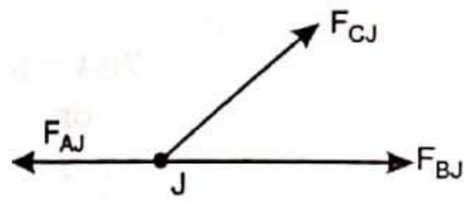

Fig. 5.2 (a)

Variant to which Case 1 can be applied

Joint J shows two members AJ and BJ and a load of 5 kN collinear with BJ.

We can apply the special *Case 1*, taking the 5 kN load as a member having a force of 5 kN Compression.

Now the conditions of special *Case 1* have been satisfied. We can therefore say,

$F_{AJ} = 0$

and $F_{BJ} = 5$ kN (Comp.)

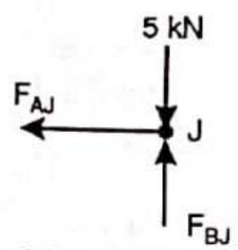

Fig. 5.2 (b)

Case 2: "If four members meet at a joint, forming two pairs of collinear members, and there is no load at the joint, then the collinear members have the same force in magnitude and nature".

Fig. 5.2 (c) shows a joint formed by four members AJ, BJ, CJ and DJ. Member AJ is collinear with BJ and member CJ is collinear with DJ. Also there is no load at joint J. We can therefore say by special *Case 2*.

$F_{AJ} = F_{BJ}$

and $F_{CJ} = F_{DJ}$

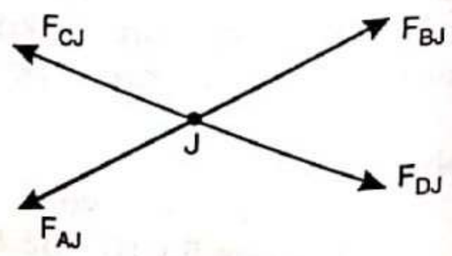

Fig. 5.2 (c)

Variant to which Case 2 can be applied

Fig. 5.2 (d) shows a joint formed by three members AJ, BJ and CJ. Also a load of 20 kN acts on it. Therefore the requirements of *Case 2* are not being satisfied. If we assume the load to be a member having a force of 20 kN Tension, the condition of special *Case 2* gets satisfied. We therefore can say,

$F_{AJ} = F_{BJ}$

and $F_{CJ} = 20$ kN (Tension)

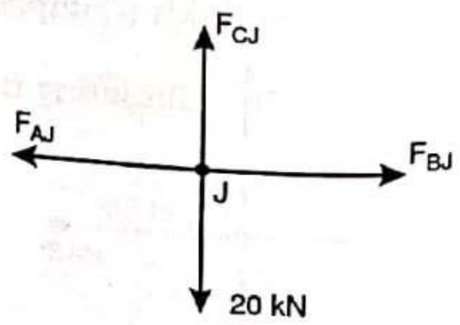

Fig. 5.2 (d)

Case 3: "If two members meet at a joint and the joint is unsupported and unloaded, then both the members are zero force members".

Figure 5.2 (e) shows a joint formed by two members AJ and BJ. The joint J is unsupported and also no load acts on it.

We can therefore say by special *Case 3*

$F_{AJ} = 0$

and $F_{BJ} = 0$

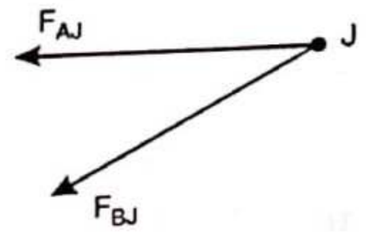

Fig. 5.2 (e)

5.7 Statically Determinate and Statically Indeterminate Truss

Statically Determinate Truss

A truss in which we can find the forces in all the members of the truss by applying the three conditions of equilibrium is known as *Statically Determinate Truss*. They are also referred to as a *Perfect Truss*.

All the trusses which we have solved were statically determinate. For a truss to be statically determinate, the following condition has to be satisfied.

$$m = 2j - r$$

Here m = number of members
j = number of joints
r = number of reactions

Fig. 5.3 shows examples of Statically Determinate Trusses.

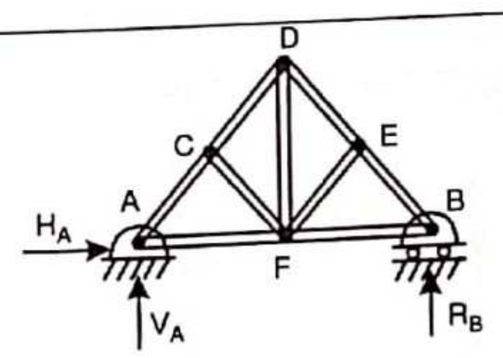

$m = 9$
$j = 6$
$r = 3$
$m = 2j - r$
$9 = 2 \times 6 - 3$
$9 = 9$
∴ Perfect Truss

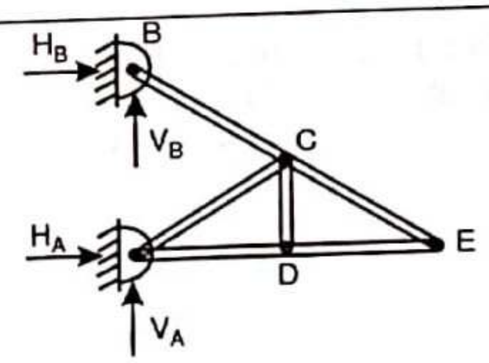

$m = 6$
$j = 5$
$r = 4$
$m = 2j - r$
$9 = 2 \times 5 - 4$
$6 = 6$
∴ Perfect Truss

Fig. 5.3

Statically Indeterminate Truss

A truss in which we cannot find the forces in all the members of the truss using conditions of equilibrium is known as a *Statically Indeterminate Truss*. They are also referred to as *Imperfect Truss* and do not satisfy the relation

$$m = 2j - r.$$

They are of two types

a) Redundant or Over Rigid Truss where $m > 2j - r$.

b) Deficient Truss where $m < 2j - r$

Figure 5.4 shows examples of Statically Indeterminate Trusses

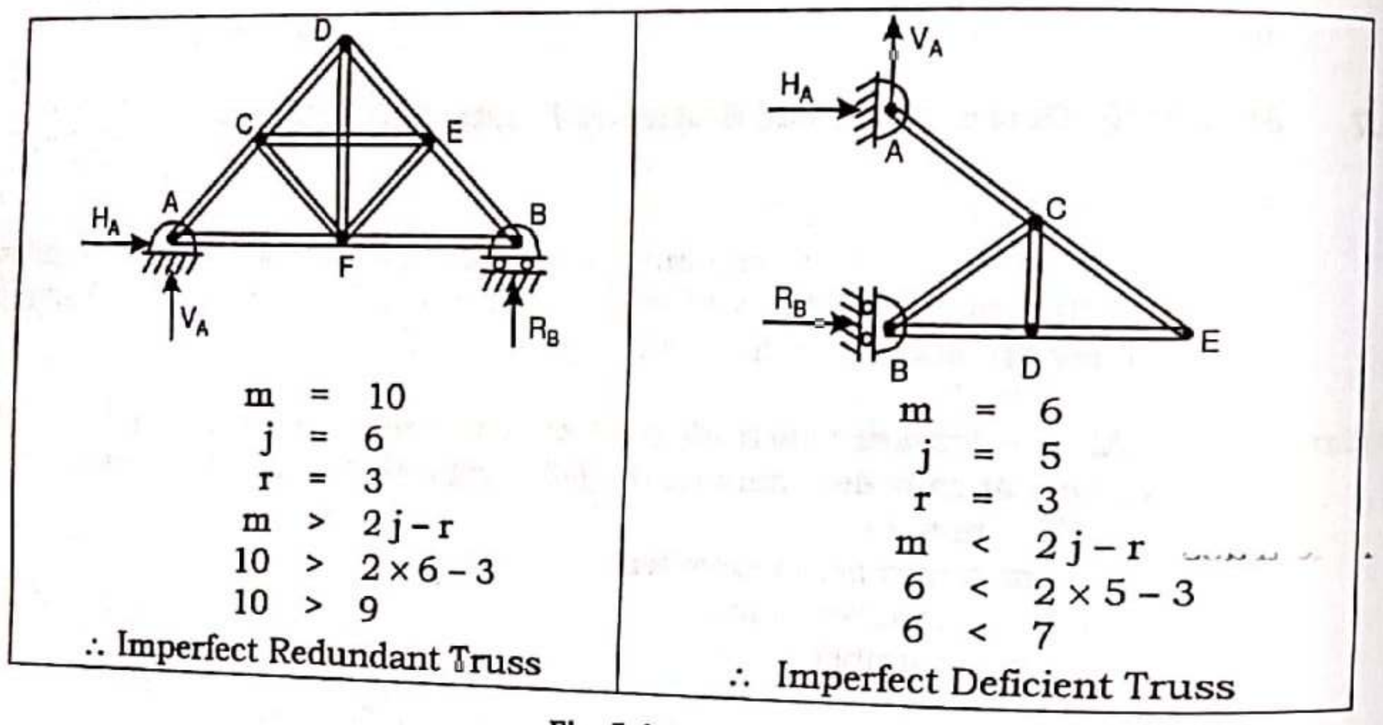

Fig. 5.4

Ex. 5.4 Without calculation find by inspection, forces in as many members as possible.

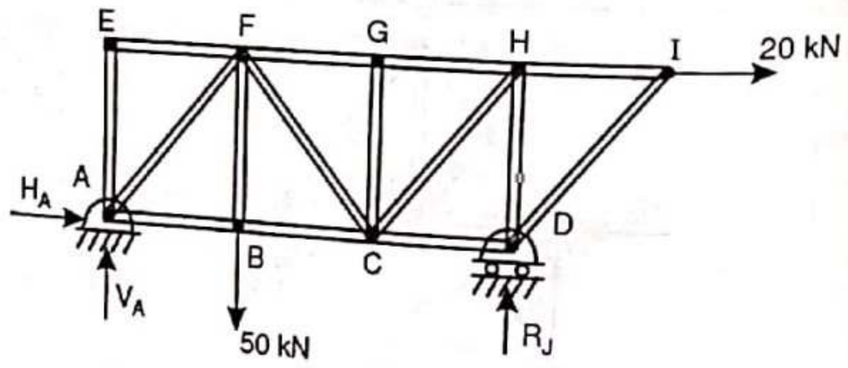

Solution:

Applying special *Case1* to joint I, we have

F_{HI} = 20 kN (Tension) ..... **Ans.**

also $F_{DI} = 0$ ..... **Ans.**

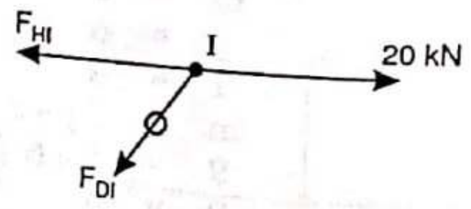

Applying special *Case1* to joint D

$F_{CD} = 0$ ..... **Ans.**

also $F_{DH} = R_J$

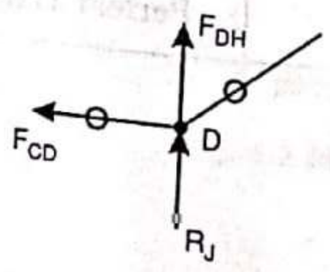

Applying special *Case 2* to joint B

F_{BF} = 50 kN (Tension) ..... **Ans.**

also $F_{AB} = F_{BC}$

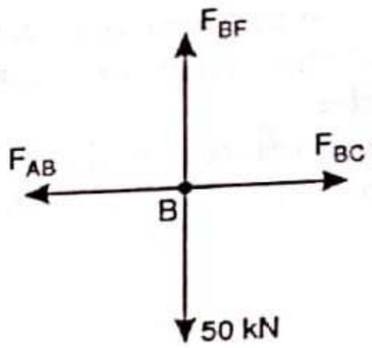

Applying special *Case 3* to joint E

$F_{AE} = 0$ ..... **Ans.**

also $F_{EF} = 0$ ..... **Ans.**

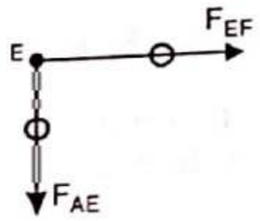

Applying special *Case 1* to joint G

$F_{GC} = 0$ ..... **Ans.**

also $F_{GF} = F_{GH}$

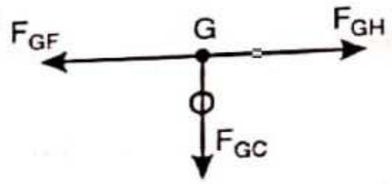

Ex. 5.5 Identify zero force members for the truss shown.

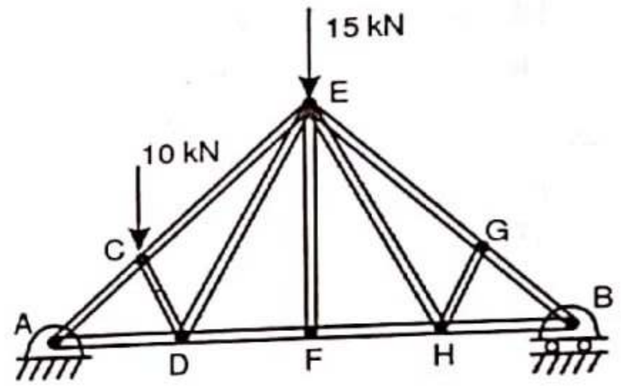

Solution:

Applying special *Case 1* to joint G

$F_{GH} = 0$ ..... **Ans.**

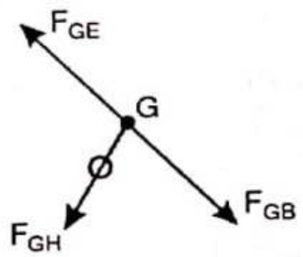

Applying special *Case 1* to joint H

$F_{HE} = 0$ ..... **Ans.**

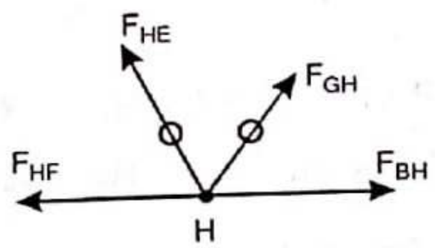

Applying special *Case 1* to joint F

$F_{EF} = 0$ ..... **Ans.**

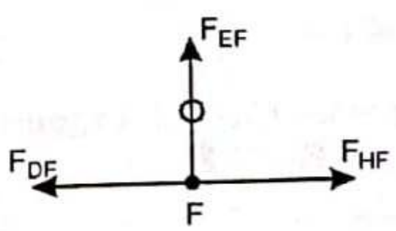

Ex. 5.6 For the pin joined truss
a. Check if the truss is perfect or imperfect
b. Find the support reactions
c. Find forces in all members of truss

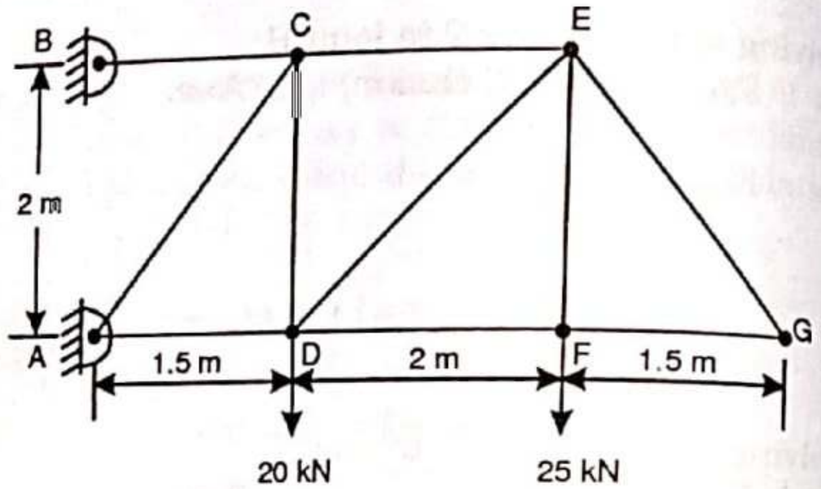

Solution:

a) *To check if truss is perfect or imperfect*

The truss has 10 members, 7 joints and 4 support reactions

For a perfect truss $m = 2j - r$

$10 = 2 \times 7 - 4$

$10 = 10$ ∴ the truss is perfect ..... **Ans.**

b. *To find support reactions*

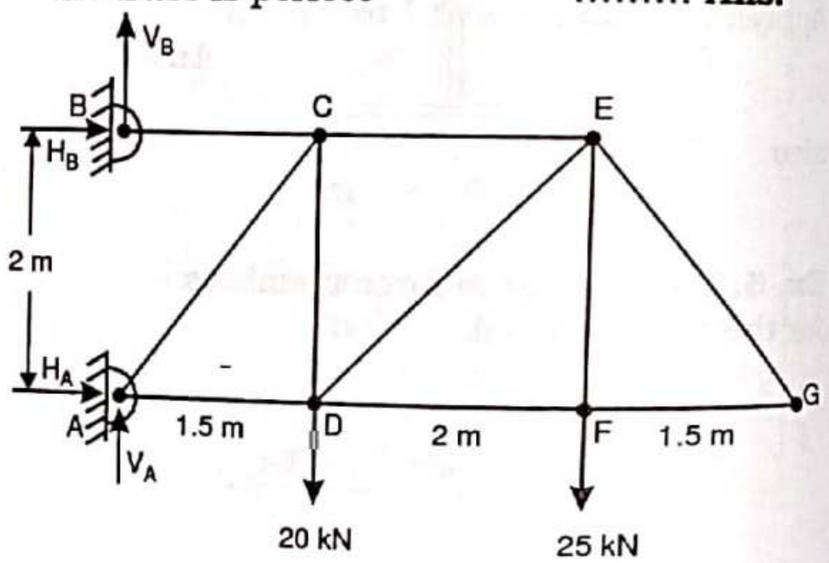

Applying COE to the entire truss

$\Sigma M_A = 0$ ↻ + ve

$-(20 \times 1.5) - (25 \times 3.5) - (H_B \times 2) = 0$

∴ $H_B = -58.75$ kN

$H_B = 58.75$ kN ←

$\Sigma F_x = 0 \rightarrow$ + ve

$H_A - 58.75 = 0$

∴ $H_A = 58.75$ kN →

Applying Special *Case 1* to joint B

$V_B = 0$

also $F_{BC} = 58.75$ kN (Tension)

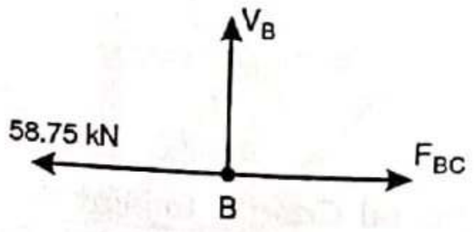

Applying COE to entire truss

$\Sigma F_y = 0 \uparrow$ + ve

$V_B + V_A - 20 - 25 = 0$

Subsituting $V_B = 0$

∴ $V_A = 45$ kN ∴ $V_A = 45$ kN ↑

∴ Recation at A = $H_A = 58.75$ kN →, $V_A = 45$ kN ↑ ..... **Ans.**

∴ Recation at B = $H_B = 58.75$ kN ←, $V_A = 0$ ..... **Ans.**

c. *To find the forces in all members of truss*

Isolating joint G

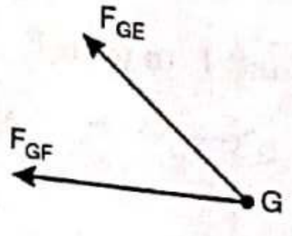

Applying Special *Case 3* to joint G

∴ $F_{GE} = F_{GF} = 0$

Isolating joint F

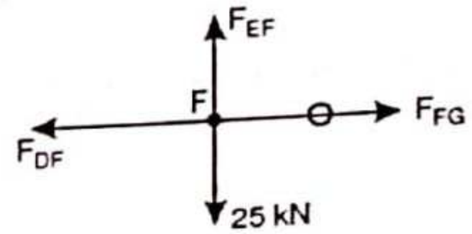

Applying Special *Case 2* to joint F

∴ $F_{EF} = 25$ kN (Tension)

also $F_{DF} = 0$

Isolating joint E

This joint has two unknown members CE and ED.

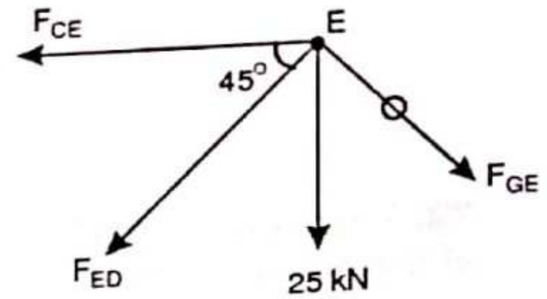

Applying COE

$\Sigma F_y = 0 \uparrow$ + ve

$-25 - F_{ED} \sin 45 = 0$

$F_{ED} = -35.35$ kN ∴ $F_{ED} = 35.35$ kN (compression)

$\Sigma F_x = 0 \rightarrow$ + ve

$-F_{CE} - F_{ED} \cos 45 = 0$

$-F_{CE} - (-35.35) \cos 45 = 0$

$F_{CE} = 25$ kN ∴ $F_{CE} = 25$ kN (Tension)

Isolating joint D

This joint has two unknown members AD and CD.

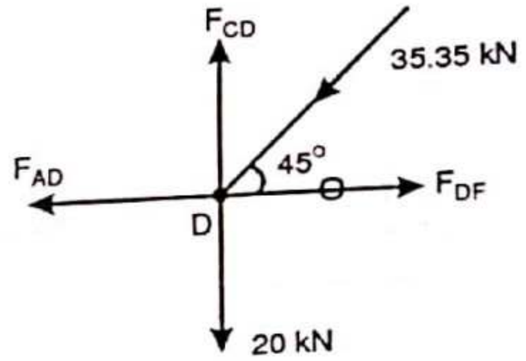

Applying COE

$\Sigma F_x = 0 \rightarrow$ + ve

$-35.35 \cos 45 - F_{AD} = 0$

$F_{AD} = -25$ kN ∴ $F_{AD} = 25$ kN (Compression)

$\Sigma F_y = 0 \uparrow$ + ve

$F_{CD} - 35.35 \sin 45 - 20 = 0$

$F_{CD} = 45$ kN ∴ $F_{CD} = 45$ kN (Tension)

Isolating joint C

$F_{BC} = 58.75$ kN (T) has been found out while finding support reactions. Member AC is the only unknown member. Assuming the member to be in tension.

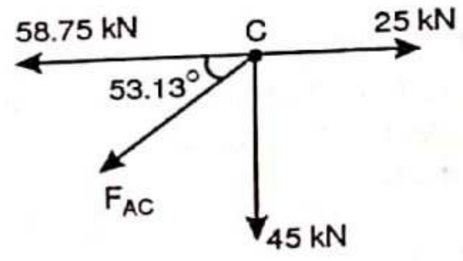

Applying COE

$\Sigma F_x = 0 \rightarrow$ + ve

$-58.75 + 25 - F_{AC} \cos 53.13 = 0$

$F_{AC} = -56.25$ kN

∴ $F_{AC} = 56.25$ kN (Compression)

Finally Tabulating the results

Member	Force (kN)	Nature
GE	0	–
GF	0	–
DF	0	–
EF	25	T
ED	35.35	C
CE	25	T
AD	25	C
CD	45	T
BC	58.75	T
AC	56.25	C

Exercise 5.1

P1. Determine the magnitude and nature of forces in all members of the truss.

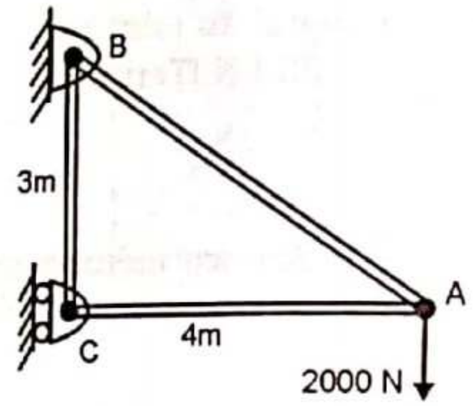

P2. Find forces in all the members of the truss. Tabulate the results.

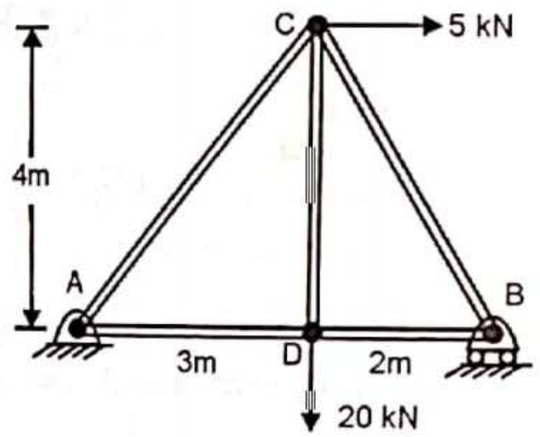

P3. Analyse the truss shown. Tabulate your results.

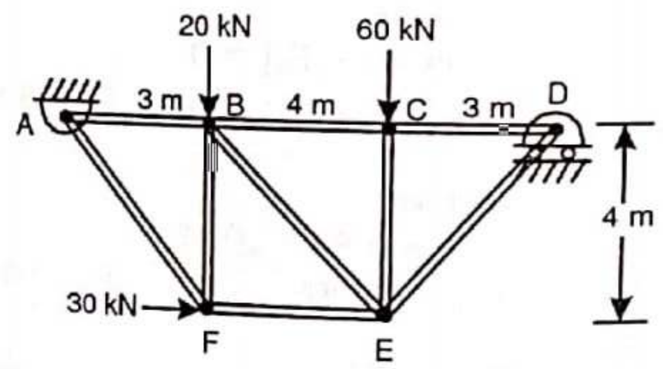

P4. Find the force in the members of the pin jointed truss loaded as shown in figure. Tabulate the forces.

(M. U. Dec 09)

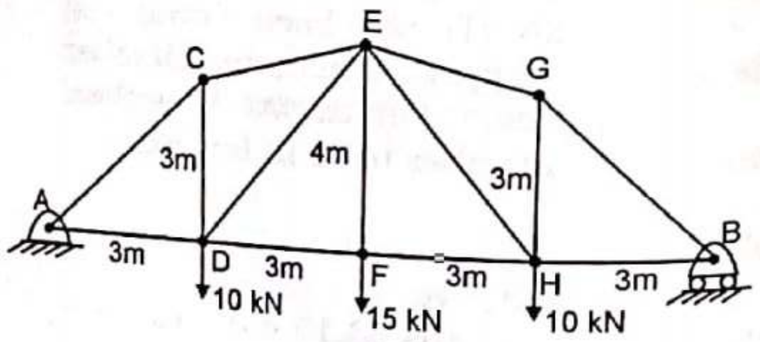

P5. Analyse the truss loaded as shown in figure for the magnitude and sense of the forces in its members

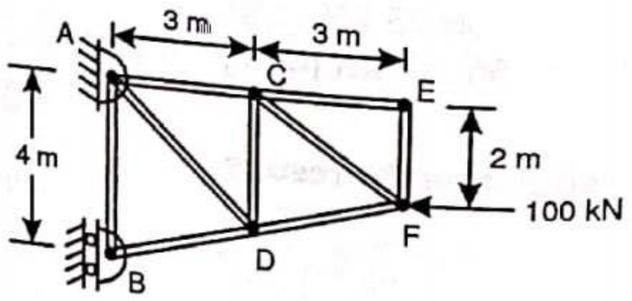

P6. A truss loaded as shown. Determine

(a) Support reactions

(b) Forces on AB, AE and BE by method of joints.

(MU Dec 14)

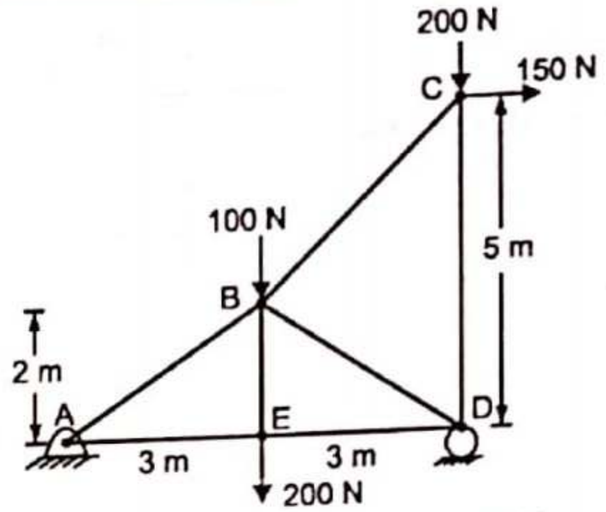

P7. Find the forces in all members.

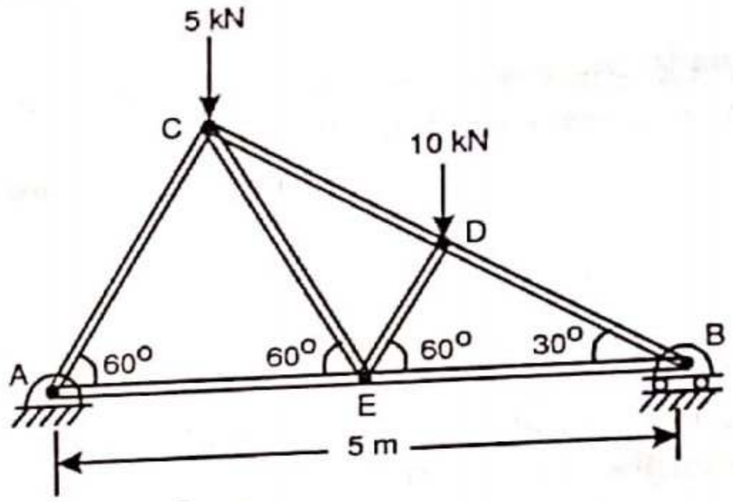

P8. Find out the member forces for the pin-joined truss, loaded as shown.

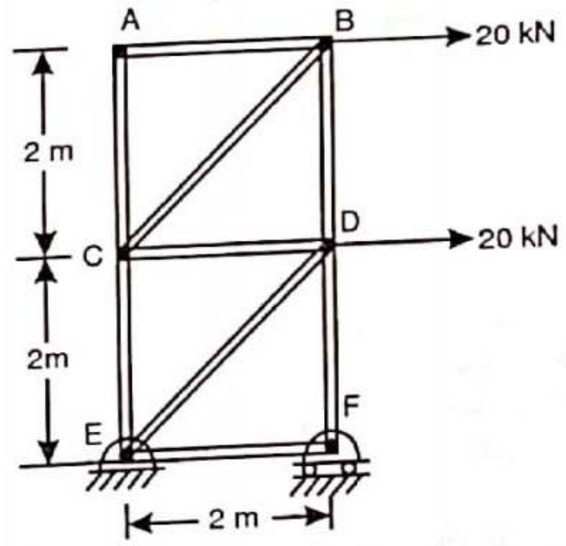

P9. Determine the magnitude and nature of the forces in all the members of the truss loaded & supported as shown. Tabulate the results. *(NMIMS May 05)*

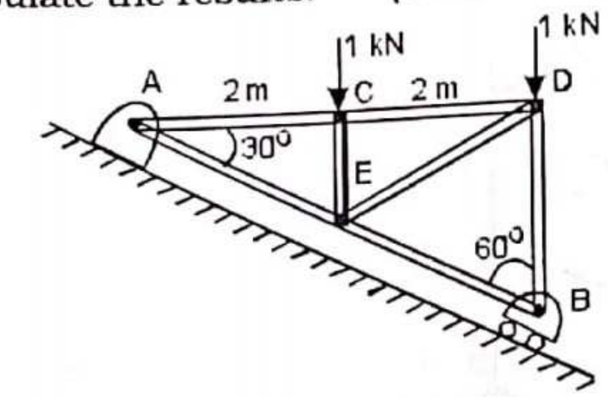

P10. Using method of joints, find the forces in each member of the truss.

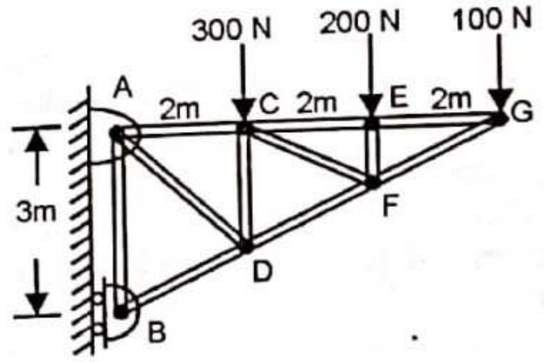

P11. Find the forces in the truss shown.

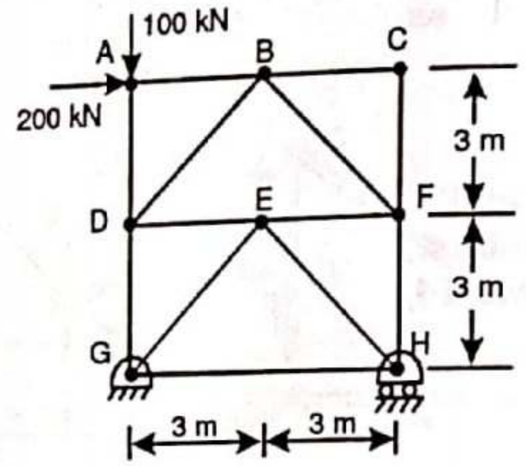

P12. Find the forces in all the members of the truss loaded as shown in figure.

(VJTI Nov 09)

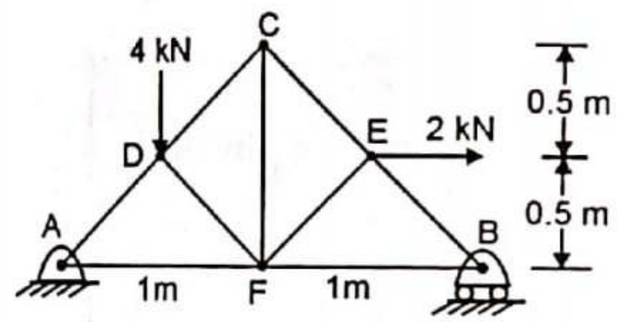

P13. Find forces in all the members of the truss.

(VJTI Nov 10)

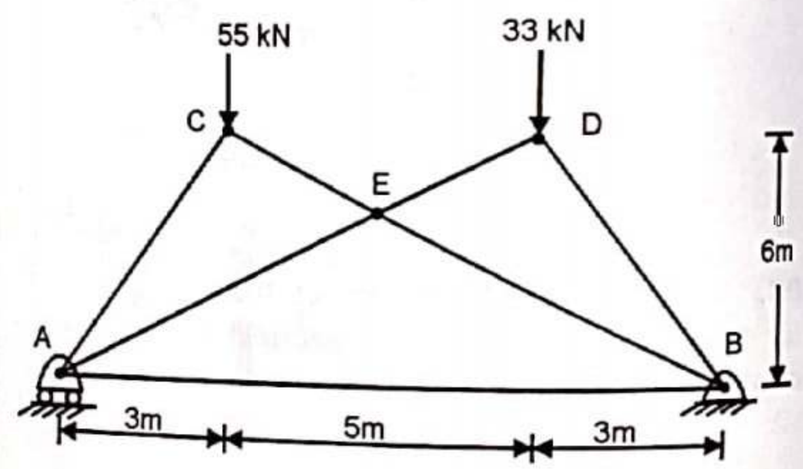

P14. For the given loading, determine all the zero – force members in the truss show. Justify your answer with adequate reasons.

(SPCE Dec 10)

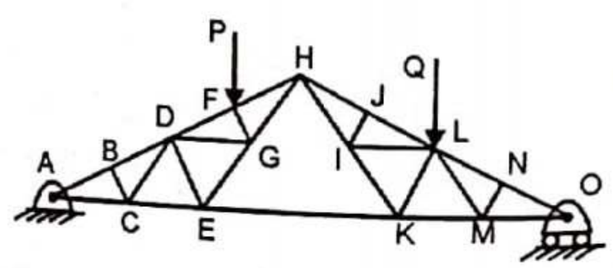

P15. Figure shows a truss supporting a cable. The cable carries a tensile pull of 10 kN and passes over a smooth pulley of radius 700 mm at A. Find forces in all the members of the truss.

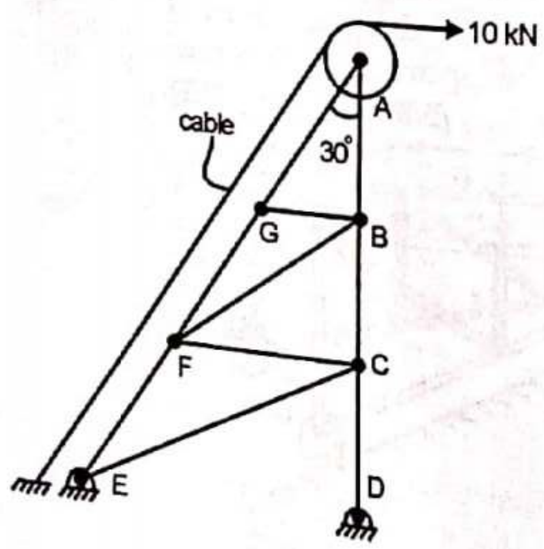

5.8. Method of Sections

In this method the entire truss is cut and separated into two parts. After separation all the three COE are applied to any one part of the truss and thus force in the members is found out. This method is based on the principle, "If the truss is in equilibrium, an isolated part of the truss will also be in equilibrium".

Method of Sections offers immediate solution to any member desired, unlike method of joints where we have to solve various joints one by one to get to the desired member. However method of sections is preferred for few members analysis, while method of joints is suited when the whole truss is to be analysed.

The following steps are to be adopted while solving the truss by method of sections.

Step 1: Tick mark the members which have to be analysed.

Step 2: Cut the truss into two distinct separate parts by taking a cutting section passing through the tick marked members (not necessary through all the tick marked members) such that not more than three unknown members are cut.

Step 3: Select any one of the two parts taking care that at least two joints are present in the selected part. Isolate the selected part from the rest of the truss.

Step 4: In the selected part of truss assume that the unknown members carry tensile force. Now apply all the three COE viz. $\Sigma F_x = 0$, $\Sigma F_y = 0$ and $\Sigma M = 0$ and solve to get forces in the desired members. Moments are usually taken about a point where two unknown forces meet to find the third force.

Step 5: If the value obtained is negative it would imply that the assumption is incorrect and the member has compressive nature of the force.

Step 6: More than one cutting section may be required to be taken for finding the forces in the desired members.

Figure shows a truss wherein we are required to find forces in members CE, EF and BF.

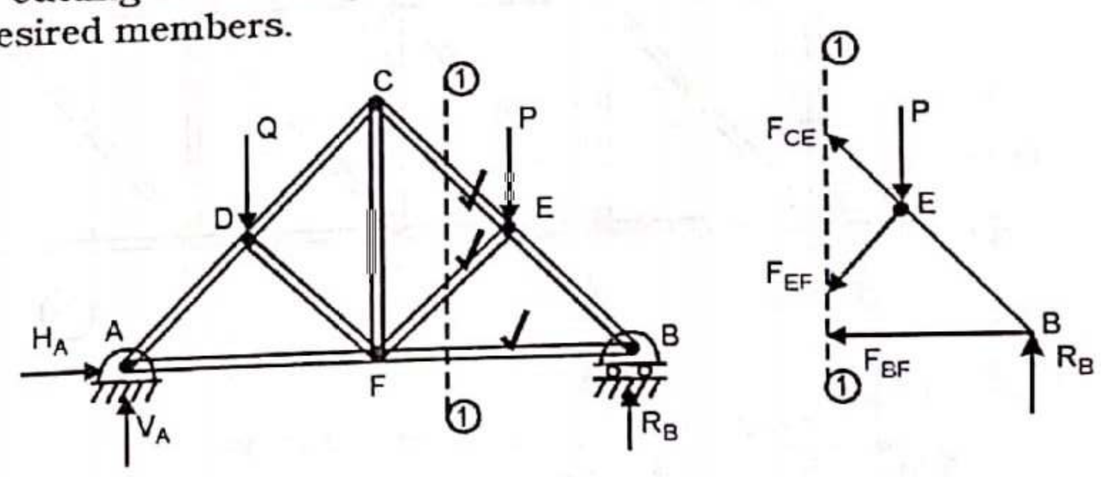

Members CE, EF and BF are tick marked.

A cutting section (1)–(1) is taken and the truss is cut into two parts. Note that not more than three unknown members are cut.

The R.H.S of the truss is isolated and all the three COE may now be applied to it. Note that there are two joints in the selected right part (requirement is of at least two joints).

Use $\Sigma M = 0$

Preferably moments may be taken about E since unknown F_{CE} and F_{EF} meet at E. This will give us the force F_{BF}.

Next, moments may be taken about B and F_{EF} can be found out (since unknown F_{CE} passes through B).

Next, either using $\Sigma F_x = 0$ or $\Sigma F_y = 0$, F_{CE} can be calculated.

Alternatively after finding F_{BF} by taking moments around E, write equations $\Sigma F_x = 0$ and $\Sigma F_y = 0$ involving unknowns F_{CE} and F_{EF}. Solve them and find the unknowns.

Ex. 5.7 For the truss shown find forces in members EF and GI by method of sections.

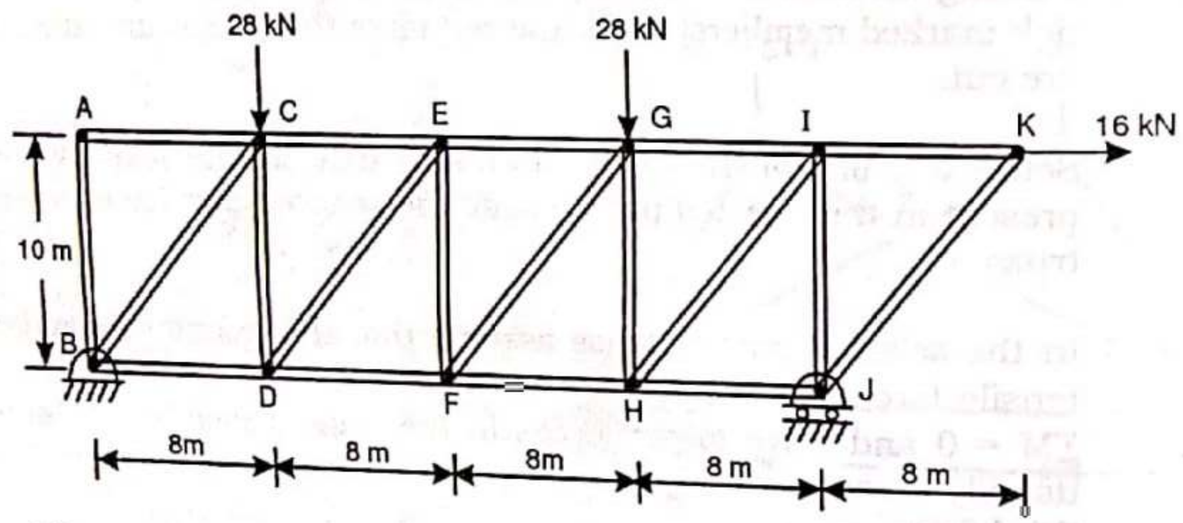

Solution: Figure (a) below shows the FBD of the truss.

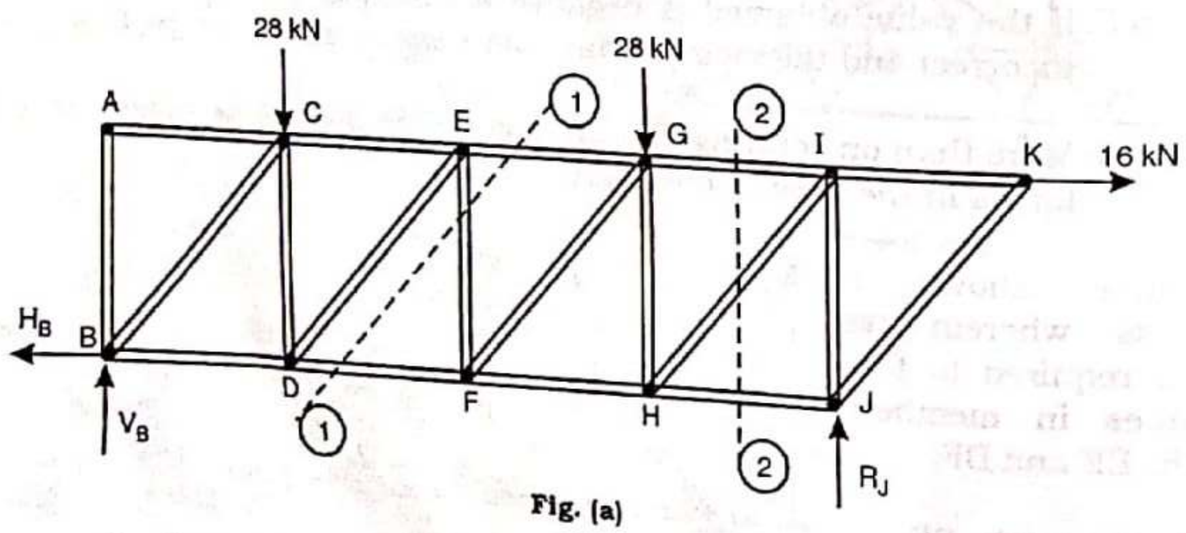

Fig. (a)

Applying COE to the entire truss

$\Sigma M_B = 0$ ↺ + ve

$-(28 \times 8) - (28 \times 24) - (16 \times 10) + (R_J \times 32) = 0$

$\therefore \quad R_J = 33$ kN ↑

To find force in member EF

Cutting the truss by taking section (1) - (1) as shown in figure (a), the FBD of the R.H.S part is shown in figure (b)

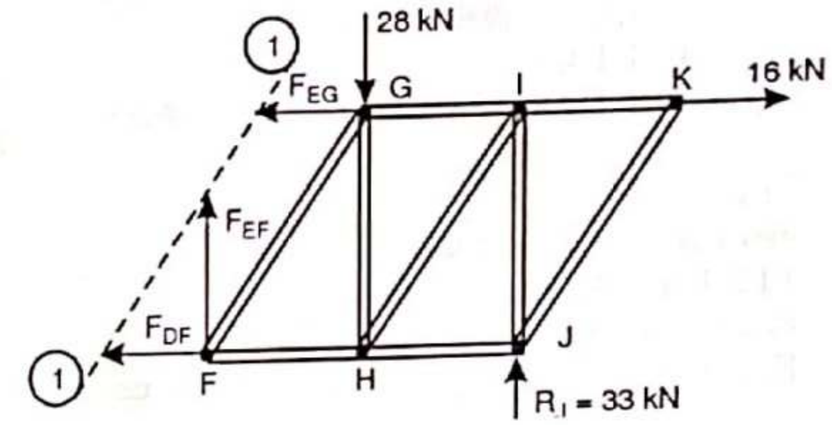

Fig. (b)

Applying COE

$\Sigma F_y = 0$

$F_{EF} - 28 + 33 = 0$

$F_{EF} = -5$ kN

$F_{EF} = 5$ kN (Compression) ... **Ans.**

To find force in member GI

Cutting the truss by taking section (2) – (2) as shown in figure (a). The FBD of the R.H.S part is shown in figure (c)

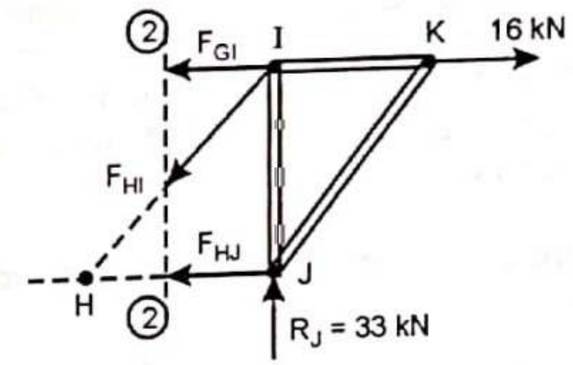

Fig. (c)

Applying COE

$\Sigma M_H = 0$ ↺ + ve

$+(F_{GI} \times 10) + (33 \times 8) - (16 \times 10) = 0$

$F_{GI} = -10.4$ kN

$F_{GI} = 10.4$ kN (Compression) .. **Ans.**

Ex. 5.8 Find the force in members FH, GI and GH of the stadium truss.

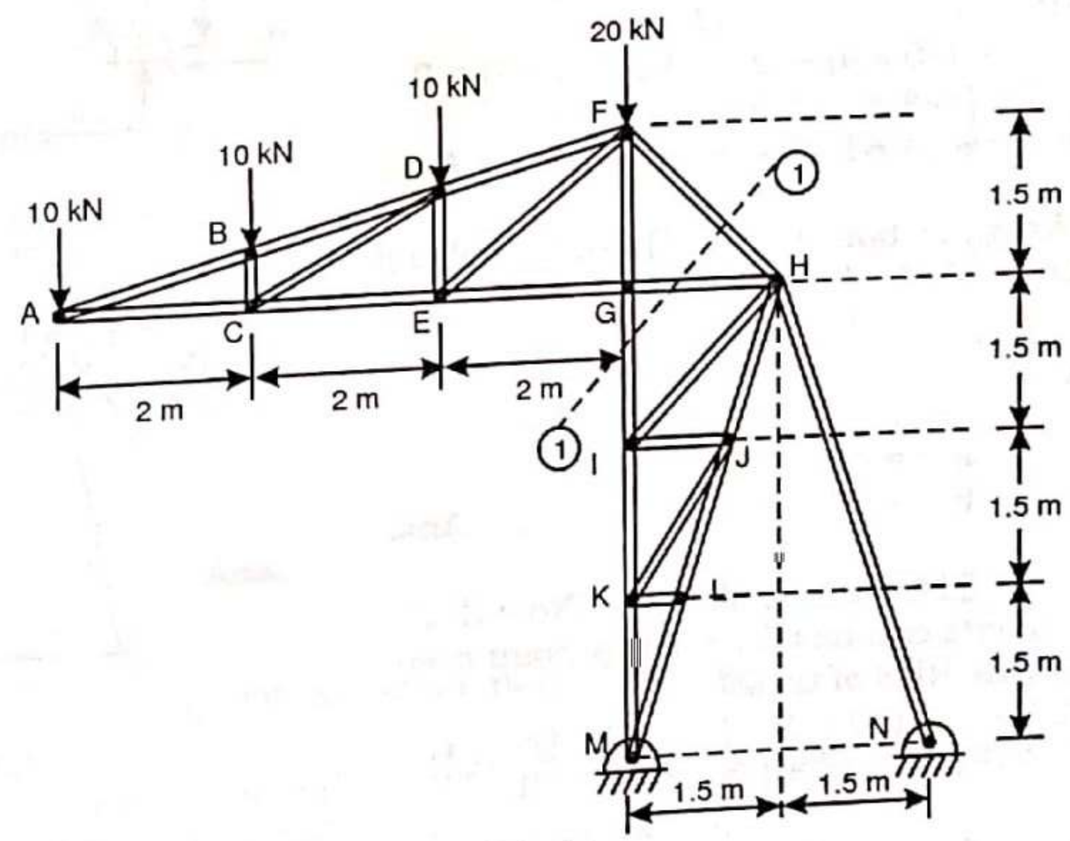

Fig. (a)

Solution: To find force in FH, GI and GH, let us take a cutting section (1)-(1) passing through them as shown in figure (a).

Let us take the L.H.S. part of the truss. This will avoid finding hinge reactions. The F.B.D of L.H.S part is shown in figure (b).

Applying COE

$\Sigma M_G = 0$ ↺ + ve

$+ (10 \times 6) + (10 \times 4) + (10 \times 2)$
$- (F_{FH} \sin 45 \times 1.5) = 0$

$F_{FH} = 113.1$ kN

$F_{FH} = 113.1$ kN (Tension) ..... **Ans.**

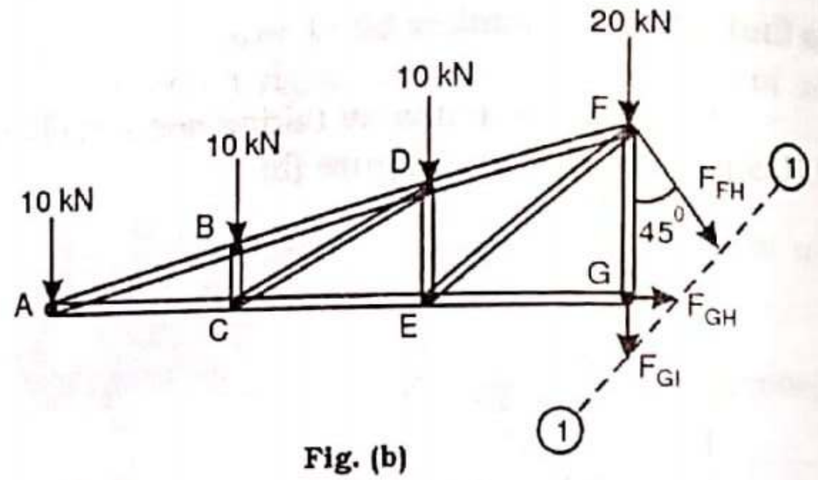

Fig. (b)

$\Sigma F_x = 0 \rightarrow$ + ve

$F_{FH} \sin 45 + F_{GH} = 0$

$113.1 \sin 45 + F_{GH} = 0$

$F_{GH} = -80$ kN

$F_{GH} = 80$ kN (Compression) ..... **Ans.**

$\Sigma F_y = 0 \uparrow$ + ve

$- F_{FH} \cos 45 - F_{GI} - 10 - 10 - 10 - 20 = 0$

$- 113.1 \cos 45 - F_{GI} - 50 = 0$

$F_{GI} = -130$ kN

$F_{GI} = 130$ kN (Compression) .....**Ans.**

Ex. 5.9 A pin-jointed truss is shown. Find forces in CD, DF and FG by method of sections.

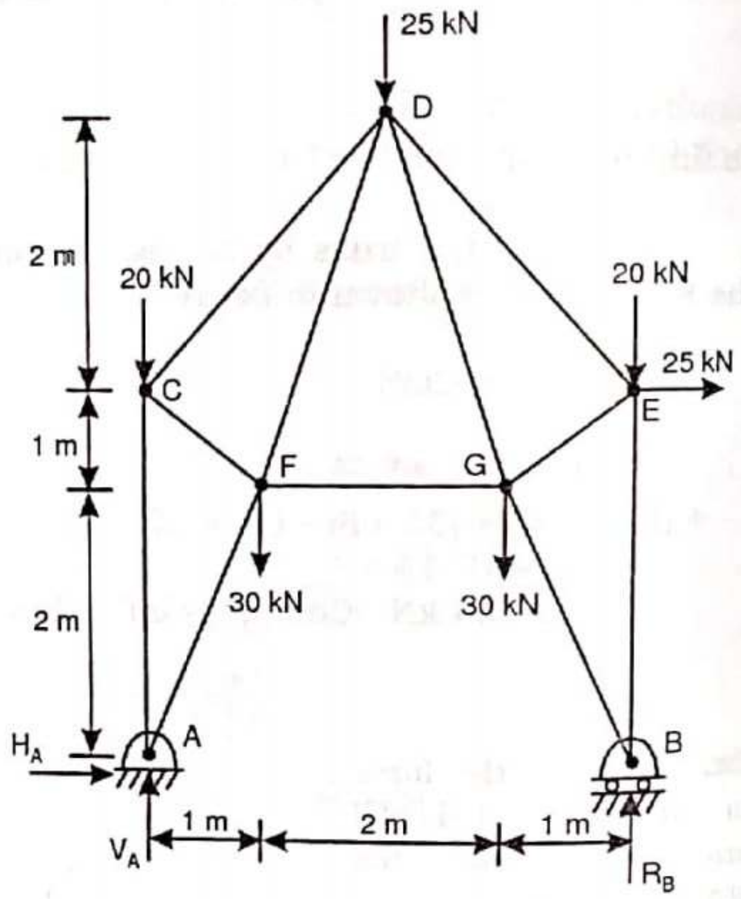

Solution: Applying COE to the entire truss

$\Sigma M_A = 0$ ↺ + ve

$+ (R_B \times 4) - (30 \times 1) - (30 \times 3)$
$- (20 \times 4) - (25 \times 3) - (25 \times 2) = 0$

∴ $R_B = 81.25$ kN

or $R_B = 81.25$ kN ↑ ..... **Ans.**

Taking section (1) – (1) and applying COE to RHS of the truss.

$\Sigma M_D = 0$ ↺ + ve

$- (F_{GF} \times 3) - (30 \times 1) + (25 \times 2)$
$- (20 \times 2) + (81.25 \times 2) = 0$

∴ $F_{GF} = 47.5$ kN

or $F_{GF} = 47.5$ kN (T) ..... **Ans.**

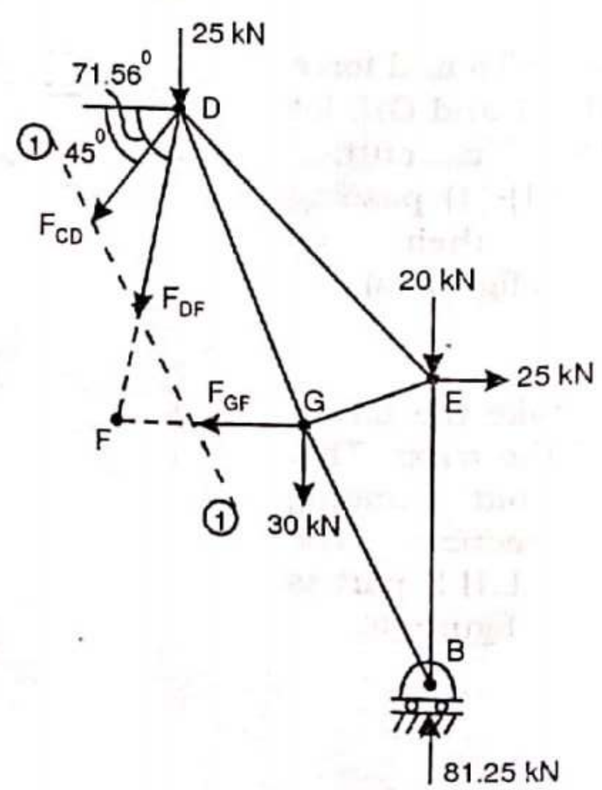

$\Sigma M_F = 0$ ↺ + ve (Note that moments can be taken @ any point even out side RHS of truss)

$- (30 \times 2) - (20 \times 3) - (25 \times 1) - (25 \times 1)$
$+ (81.25 \times 3) + (F_{CD} \cos 45 \times 3)$
$- (F_{CD} \sin 45 \times 1) = 0$

∴ $F_{CD} = -52.15$ kN

or $F_{CD} = 52.15$ kN (C) ..... **Ans.**

$\Sigma F_Y = 0$ ↑ + ve

$- F_{CD} \sin 45 - F_{DF} \sin 71.56 - 25 - 20 - 30 + 81.25 = 0$

$- (- 52.15) \sin 45 - F_{DF} \sin 71.56 + 6.25 = 0$

∴ $F_{DF} = 45.46$ kN or $F_{DF} = 45.46$ kN (T) ..... **Ans.**

Ex. 5.10 Determine forces in AB, AH and FG members by method of section.

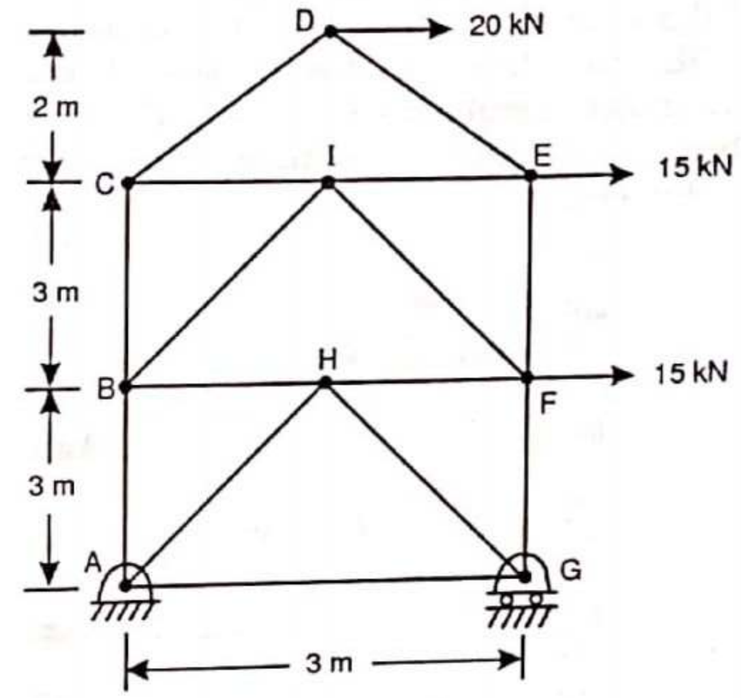

Solution: Taking section (1) – (1), a rare section, useful for such so called 'K' truss only.

Applying COE to top part of section (1) – (1). Four unknowns AB, FG, BH and HF have been cut by the section (1) – (1), of which we require to find forces in only AB and FG. Note that usually cutting sections should not cut more than three unknown members. However we can cut four unknown members as done over here if three of them meet at a point. Also note that by taking top part of truss we avoid finding the support reactions.

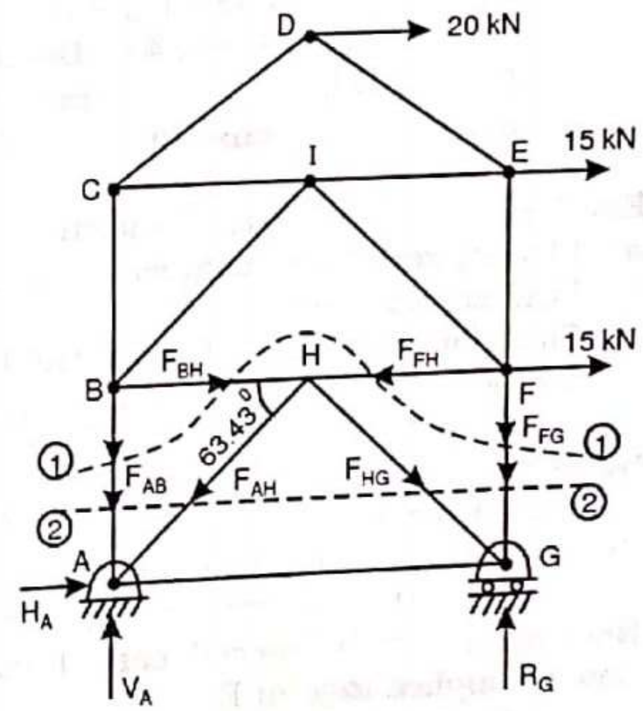

$\Sigma M_B = 0$ ↺ + ve

$- (20 \times 5) - (15 \times 3) - (F_{GF} \times 3) = 0$

∴ $F_{FG} = -48.33$ kN

or $F_{FG} = 48.33$ kN (C) ..... **Ans.**

$\Sigma F_Y = 0$ ↑ + ve

$- F_{AB} - F_{FG} = 0$

$- F_{AB} - (- 48.33) = 0$

∴ $F_{AB} = 48.33$ kN

or $F_{AB} = 48.33$ kN (T) ..... **Ans.**

To find F_{AH}

Taking section (2) – (2) and applying COE to the top part of the truss

$\Sigma M_G = 0$ ↺ + ve

$- (20 \times 8) - (15 \times 6) - (15 \times 3) + (F_{AB} \times 3) + (F_{AH} \sin 63.43 \times 1.5) + (F_{AH} \cos 63.43 \times 3) = 0$

∴ $- 160 - 90 - 45 + (48.33 \times 3) + 2.683\, F_{AH} = 0$

∴ $F_{AH} = 55.91$ kN

or $F_{AH} = 55.91$ kN (T) ..... **Ans.**

Ex. 5.11 For the pin joined truss, check force in members CE, DE and DF by method of sections.

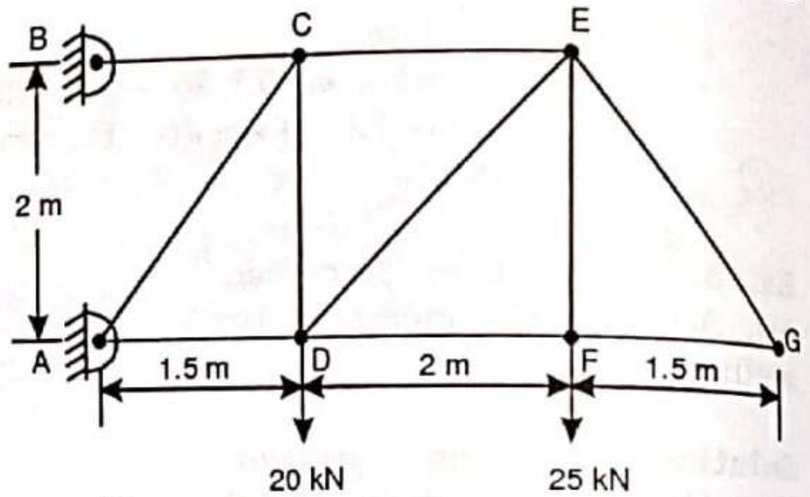

Solution: Using method of sections.
Taking section (1) – (1) and applying COE to RHS of the truss. Three unknown members CE, DE and DF have been cut. Initially assuming them to be in tension

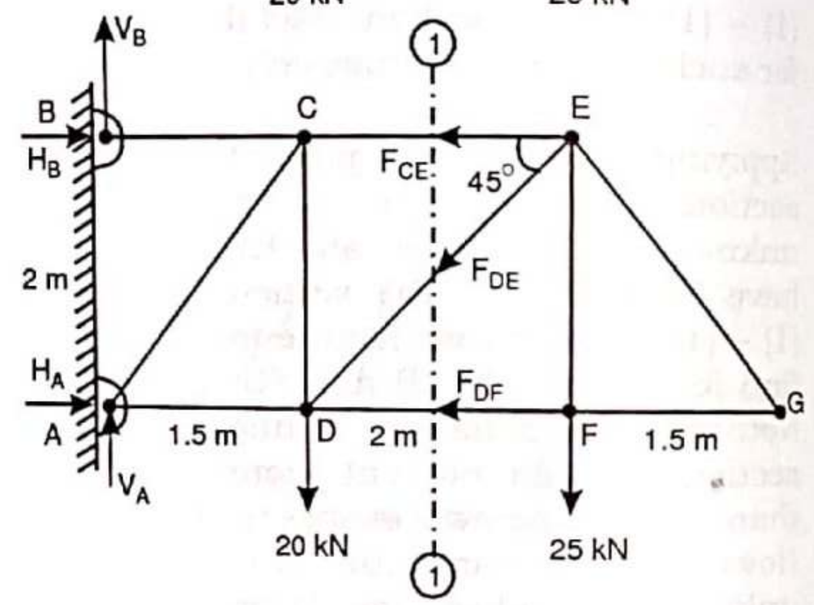

$\Sigma F_y = 0 \uparrow + ve$
$-F_{DE} \sin 45 - 25 = 0$
$F_{DE} = -35.35$ kN
$\therefore$ $F_{DE} = 35.35$ kN (C) ..... **Ans.**

$\Sigma M_E = 0 \circlearrowleft + ve$
$-(F_{DF} \times 2) = 0$
$\therefore$ $F_{DF} = 0$ ..... **Ans.**

$\Sigma F_x = 0 \rightarrow + ve$
$-F_{CE} - F_{DE} \cos 45 - F_{DF} = 0$
$\therefore$ $-F_{CE} - (-35.35) \cos 45 - 0 = 0$
$F_{CE} = 25$ kN
$F_{DE} = 25$ kN (Tension) ..... **Ans.**

Ex. 5.12 For the roof truss shown
a. Identify zero force members.
b. Find support reactions.
c. Find force in CD, CG and GF by method of sections.

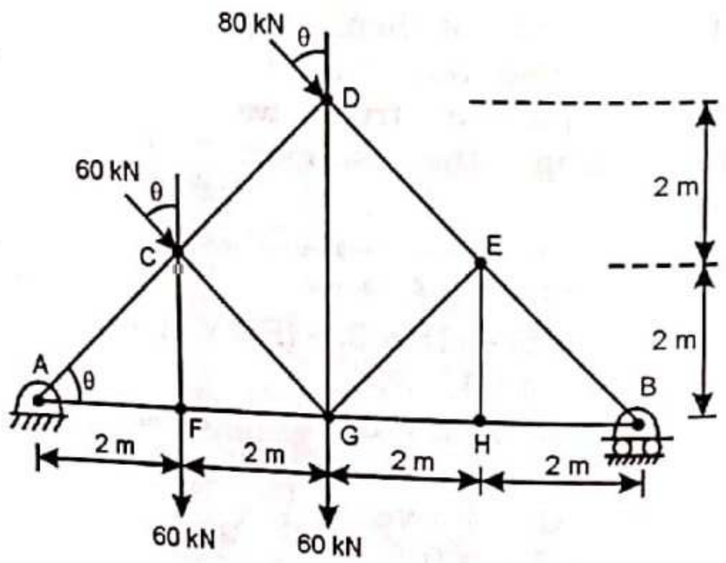

Solution:
a) Zero force members
Applying special case 1 to joint H
$F_{EH} = 0$
Because $F_{EH} = 0$, special case 1 can now be applied to joint E.
$F_{EG} = 0$

b) Support reactions.
Applying COE to the entire truss

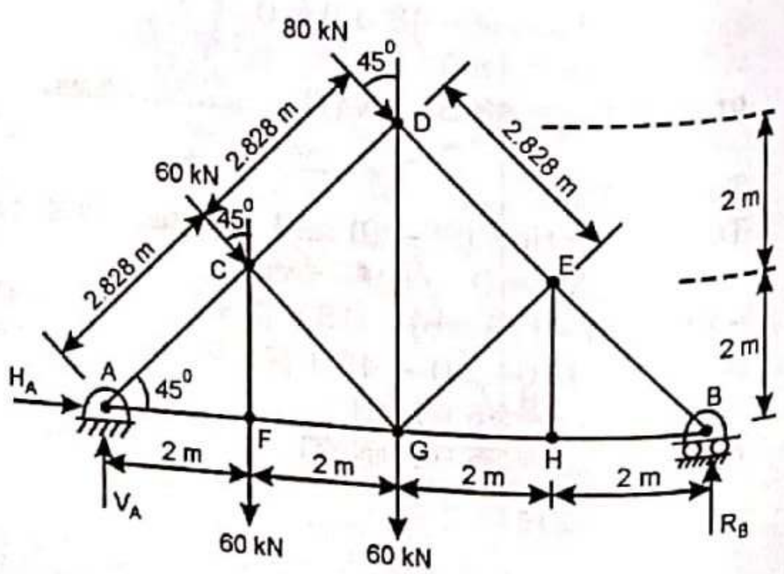

$\Sigma M_A = 0 \circlearrowleft + ve$
$+(R_B \times 8) - (60 \times 2) - (60 \times 4)$
$-(60 \times 2.282) - (80 \times 5.657) = 0$
$\therefore$ $R_B = 122.78 = 122.78$ kN $\uparrow$

$\Sigma F_y = 0 \uparrow + ve$
$V_A - 60 - 60 + 122.78 - 60 \cos 45 - 80 \cos 45 = 0$
$\therefore$ $V_A = 96.216 = 96.216$ kN $\uparrow$

$\Sigma F_x = 0 \rightarrow + ve$
$H_A + 60 \sin 45 + 80 \sin 45 = 0$
$\therefore$ $H_A = -99$ kN $= 99$ kN $\leftarrow$... **Ans.**

c) Forces in CD, CG and GF by method of section
Taking section (1)-(1) and applying COE to LHS of the truss. Three unknown members CD, CG and GF which are required to be found out have been cut by the section.
Initially assuming them to be in tension.

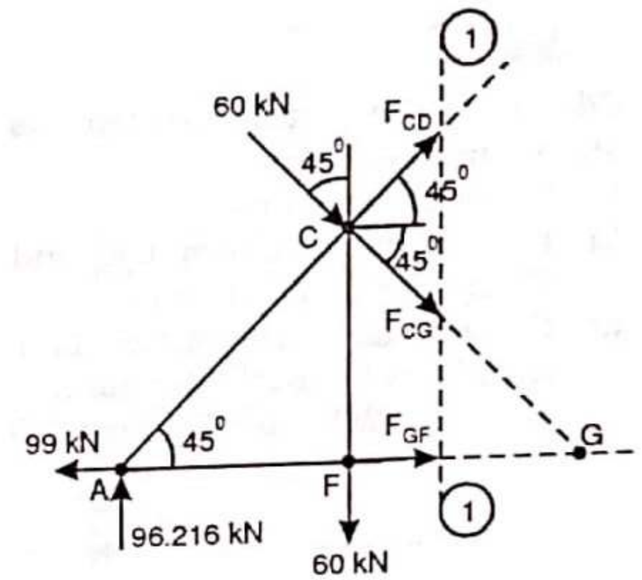

$\Sigma M_C = 0 \circlearrowleft + ve$
$+(F_{GF} \times 2) - (99 \times 2) - (96.216 \times 2) = 0$
$\therefore$ $F_{GF} = 195.2 = 195.2$ kN (T) ..... **Ans.**

$\Sigma M_G = 0 \circlearrowleft + ve$
$-(96.216 \times 4) + (60 \times 2) - (F_{CD} \times 2.828) = 0$
$\therefore$ $F_{CD} = -93.66 = 93.66$ kN (C) ..... **Ans.**

$\Sigma F_x = 0 \rightarrow + ve$
$\therefore$ $F_{CG} \cos 45 + F_{CD} \cos 45 + F_{GF} + 60 \sin 45 - 99 = 0$
$F_{CG} \cos 45 + (-93.66) \cos 45 + (195.2) + 60 \sin 45 - 99 = 0$
$\therefore$ $F_{CG} = -102.4$ kN
or $F_{CG} = 102.4$ kN (C) ..... **Ans.**

Exercise 5.2

P1. Find forces in members CE, CD and BD by method of sections and remaining forces in members by method of joints. Tabulate the results properly.
(MU May 08)

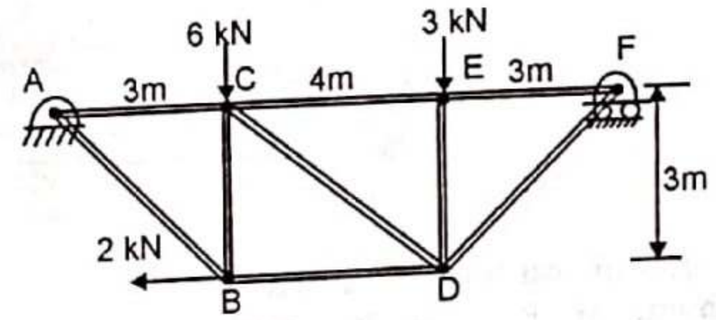

P2. A pin jointed truss is loaded and supported as shown, determine
(i) forces in member BD, CD and CE by method of section and
(ii) forces in remaining members by method of joints.
(MU May 08, KJS May 17)

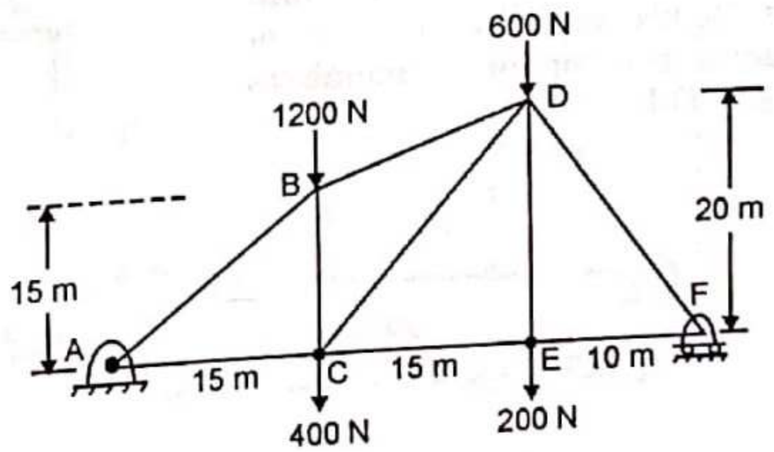

P3. A truss is loaded as shown:

a. By method of sections find JH, FB

b. Without calculations find zero force members

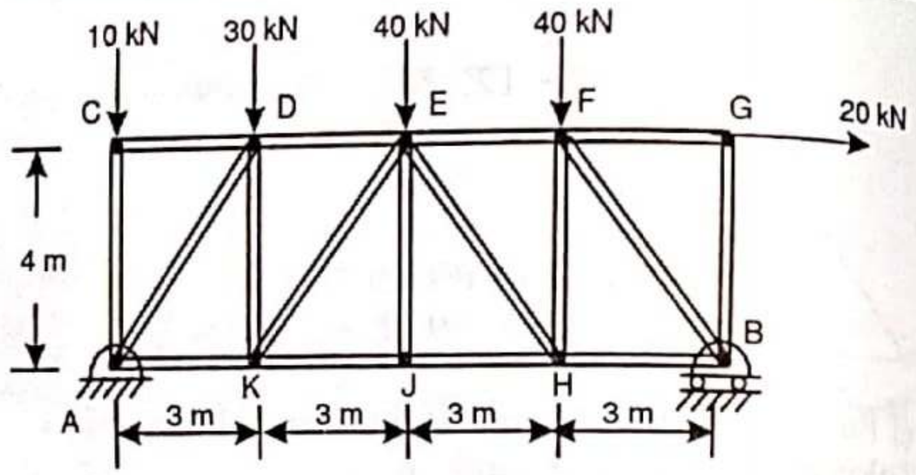

P4. For the truss loaded as shown in figure, find

i) Support reactions

ii) Forces in members CE and CF by method of section.

iii) Forces in any other four members by method of joints

(MU Dec 09, Dec 15)

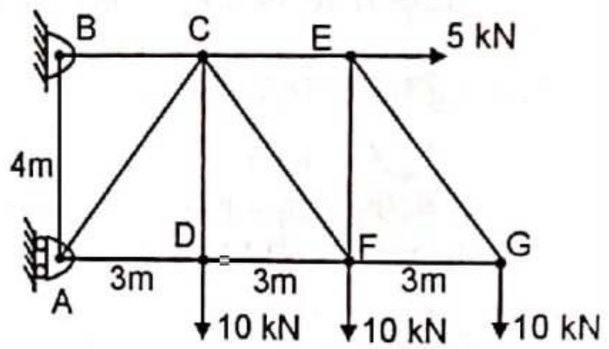

P5. Find the forces in all the members of the truss shown. Also find support reactions. Use method of sections for any three members.

(MU Dec 07)

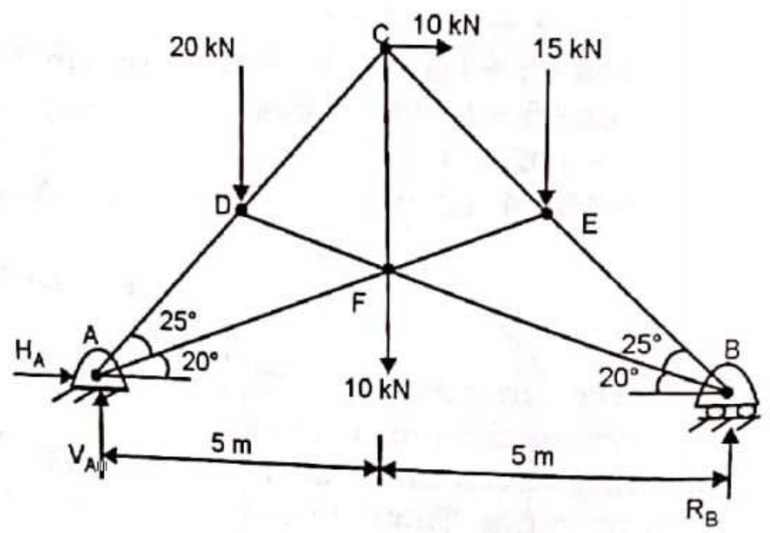

P6. A pin jointed tower truss is shown. If P = 4 kN and Q = 8 kN find by method of sections the forces in members EG and GJ.

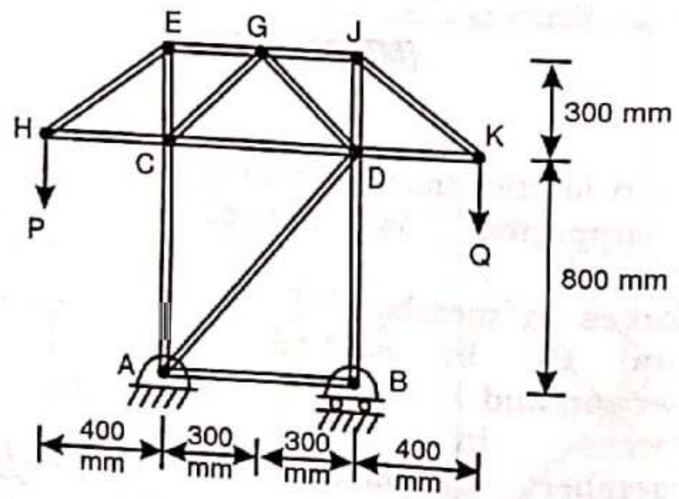

P7. Determine the forces in members BC, CE and DE by method of sections and all other members by method of joints. Give the result in a table.

(MU May 14)

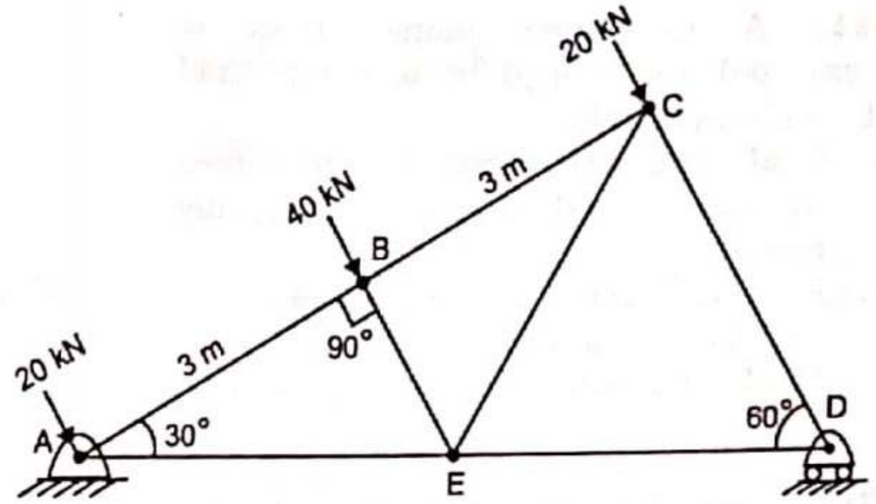

P8. For the truss shown

a. Identify the zero force member in the truss shown in the figure.

b. Find the forces in the members AE by method of section.

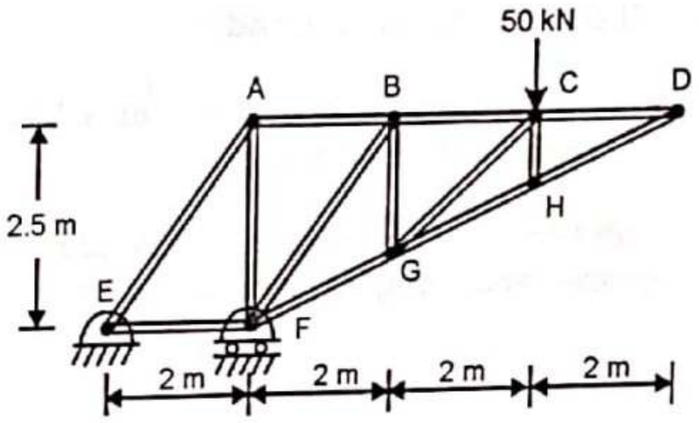

P9. Referring to the truss shown, find;

a. Reactions at D and C.

b. Zero force members.

c. Forces in members EF, EC and CD by method of sections.

d. Forces in other members by method of joints.

(MU Dec 12, Dec 17, KJS Nov 15)

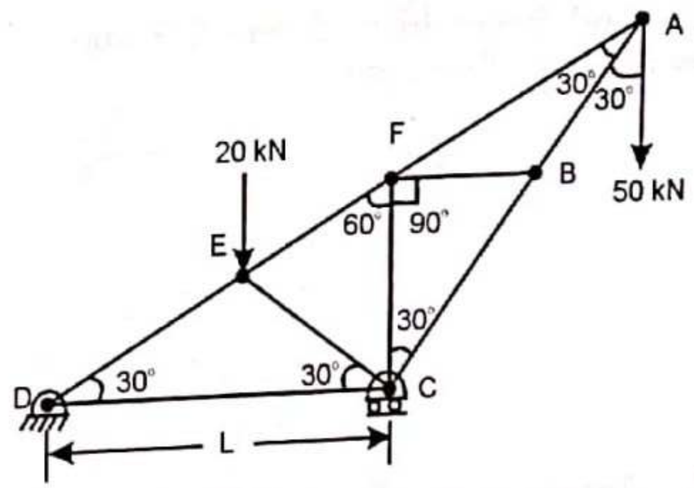

P10. Find forces in truss members BF, BE using method of section and other members using method of joints.

(MU Dec 10, May 13)

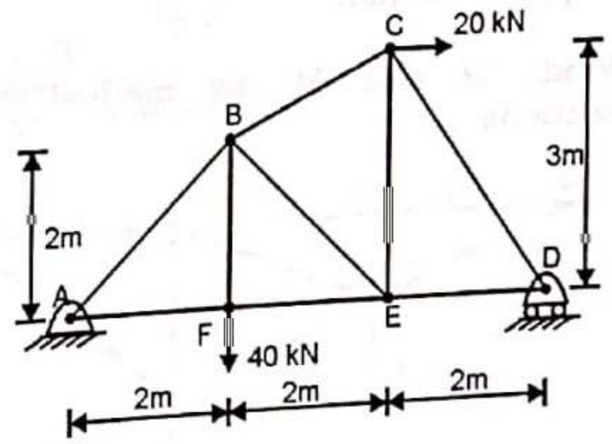

P11. A pin-joined plane truss is supported and loaded by only one load of 40 kN as shown.

a. Find members carrying zero forces by the method of inspection giving reasons.

b. Find the force in the members KC and BH by method of section.

c. Find the reactions at the supports.

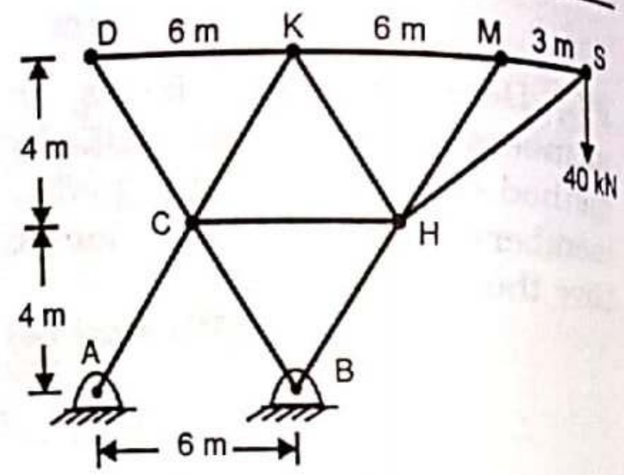

P12. For the pin-joined truss loaded as shown, find

a. All the reactions at A and B

b. Forces in members EC, ED and DF by method of sections.

c. Identify all the zero force members giving reasoning for each member.

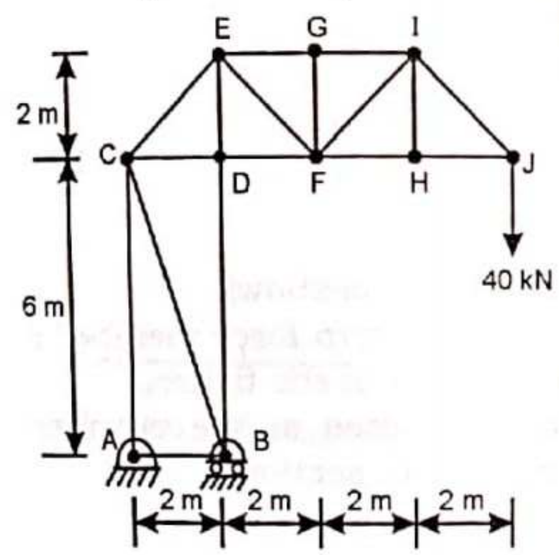

P13. Find forces in members DG and FH by method of sections.

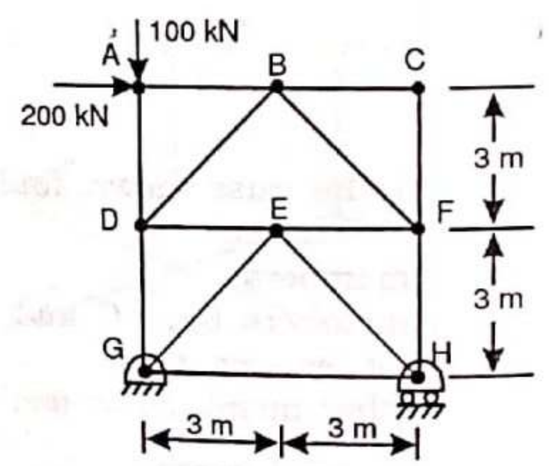

P14. For the truss shown find,

a. Support reaction

b. Find AH and AD by method of sections.

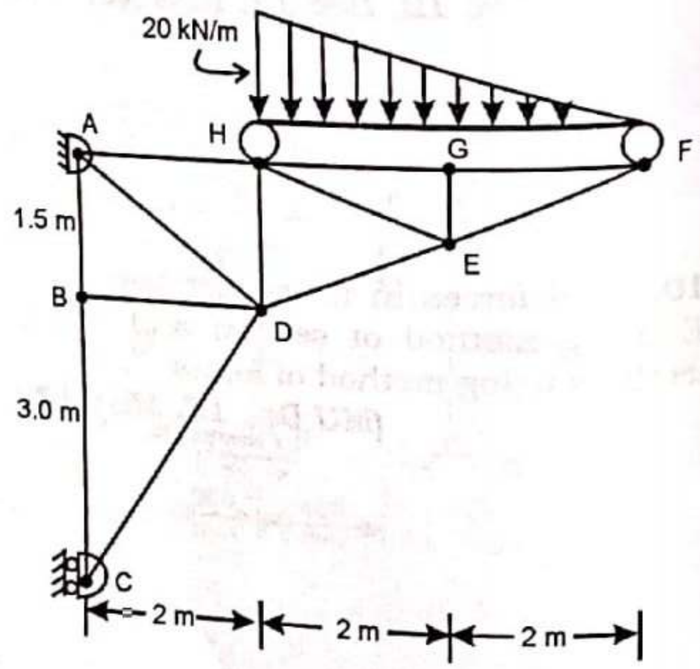

P15. Determine the force in the members BC, CG and CD of a truss by the method of section and tabulate the results indicating nature of force.

(VJTI Mar 11)

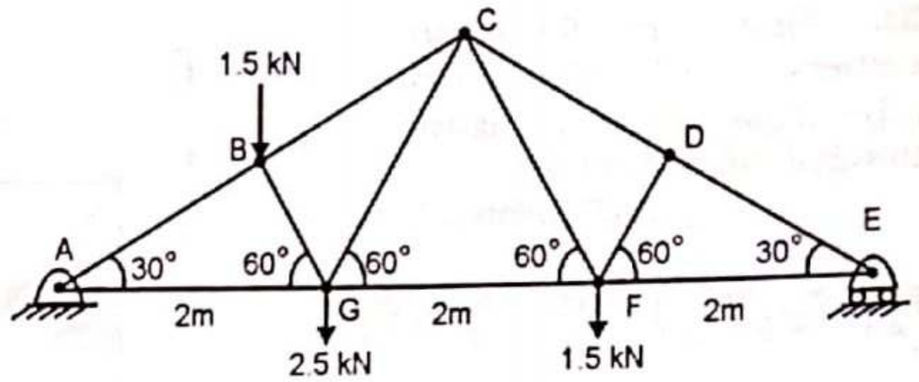

P16. A symmetrical truss is loaded as shown. Find support reactions and forces in FH, FD and CD by method of sections.

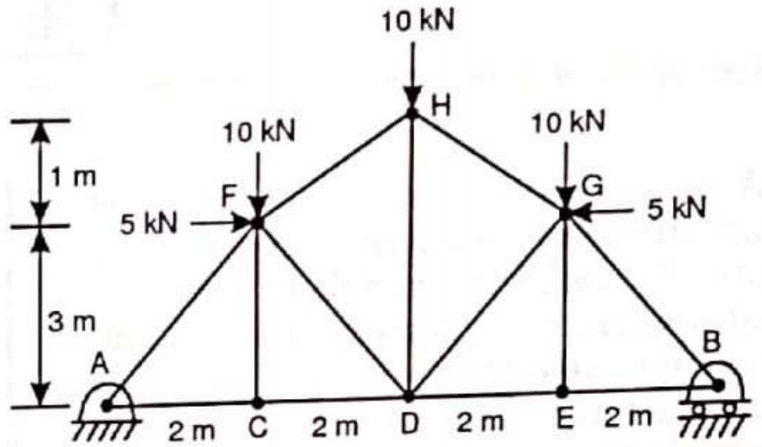

P17. A pin jointed truss is supported by a hinge and a rope as shown. Determine

a) the support reactions.

b) Force in member AD by method of section.

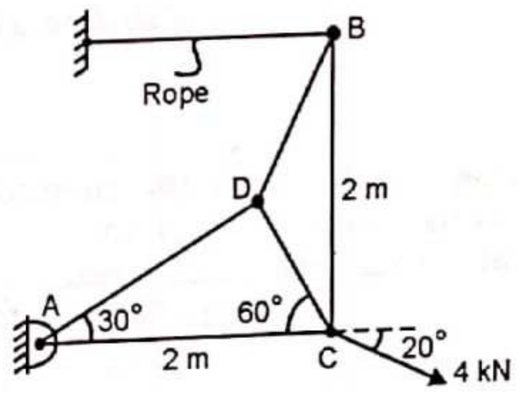

P18. Determine the forces in the members BD, CD and CE by method of sections and forces in remaining members by method of joints.

(MU May 09)

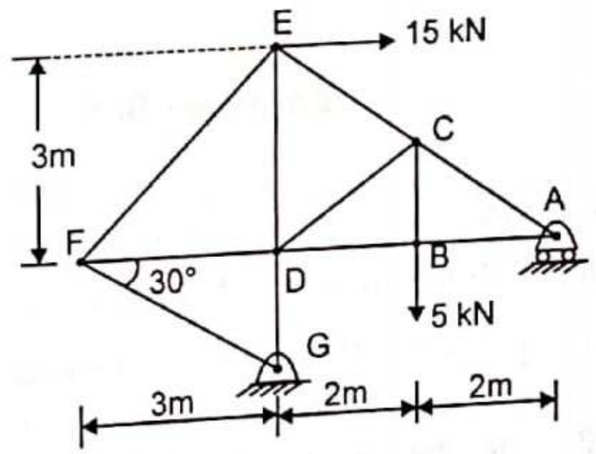

P19. A truss is loaded as shown in figure. Find force in members AB and AF of the truss by method of sections.

(SPCE Nov 12)

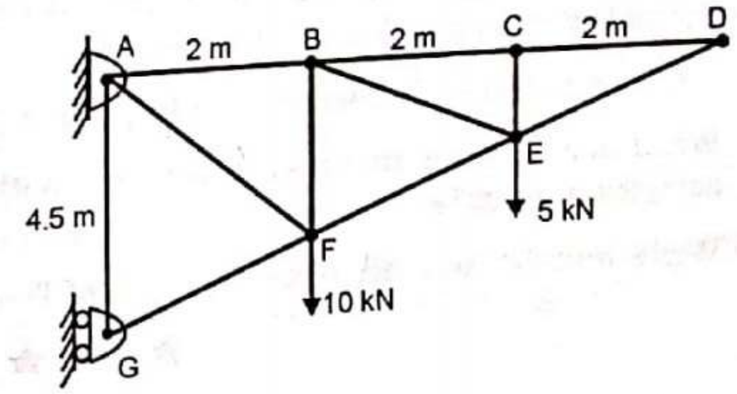

P20. Find the force in members CD, CE, DE and DB of the truss shown in figure using method of sections. *(VJTI Nov 12)*

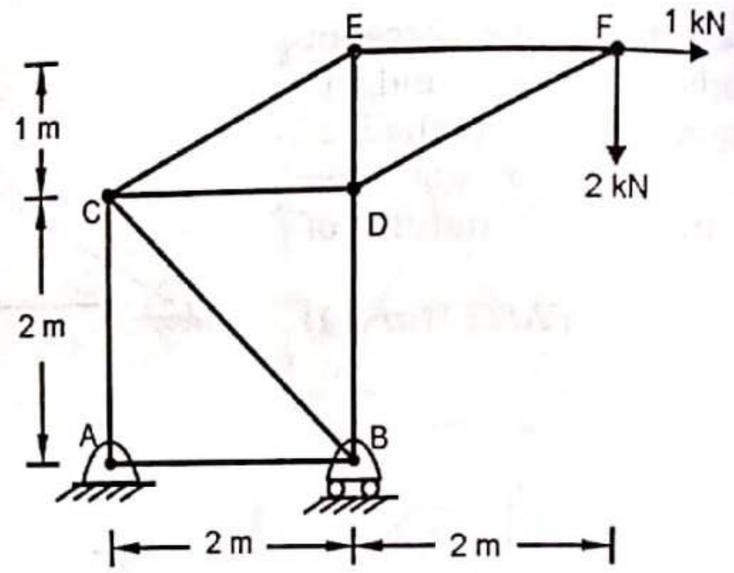

P21. A truss is loaded and supported as shown. Determine the following
(i) Identify the zero force members if any.
(ii) Find the forces in members EF, ED and FC by method of joints.
(iii) Find the forces in members GF, GC and BC by method of sections. *(MU Dec 16)*

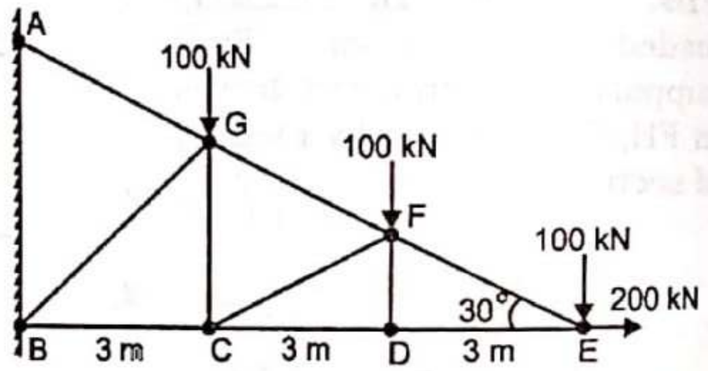

P22. Determine the force in the member ED of the truss by method of section. All members are equal in lengths = 4m. *(NMIMS May 17)*

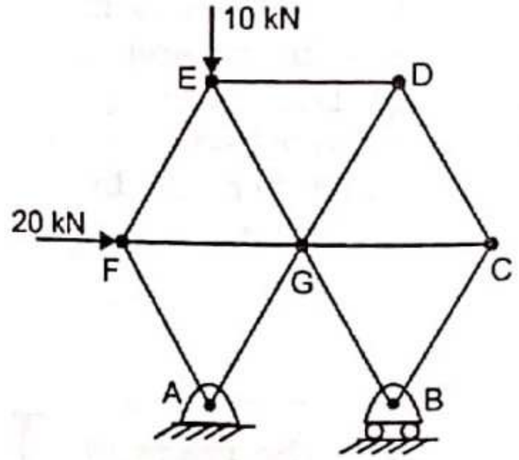

Exercise 5.3

Theory Questions

Q.1 Define Truss and discuss its engineering applications. *(MU Dec 02)*

Q.2 Explain in brief the different methods of analysis of truss.

Q.3 State assumptions made in the analysis of plane truss. *(MU Dec 10, 11, NMIMS May 17)*

Q.4 Explain the difference between method of joints and method of sections used in the solution of pin-jointed frames.

Q.5 What is a Perfect Truss and an Imperfect Truss? *(MU)*

Q.6 What is zero force member in a truss. With examples state the conditions for a zero force member. *(MU Dec 16)*

Q.7 Write a short note on 'Classification of Truss'. *(MU Dec 11)*

★ ★ ★

Chapter 6

Centroid and Centre of Gravity

6.1 Introduction

We know every body is attracted to the centre of the earth by a force of attraction, known as the weight of the body.

The weight being a force acts through a point known as the centre of gravity of the body. In Chapter 2 we have emphasised in article 2.2 that the point of application of the force is one of the necessary data to define a force. Hence the location of centre of gravity becomes important while dealing with the weight force.

In this chapter we will learn to find the centre of gravity of bodies, plane areas and lines. We will also study the approach using *integration method* to find the centre of gravity of figures bounded by curve. Finally we will study the application of the location of centre of gravity to certain engineering problems.

6.2 Centroids and Centre of Gravity defined

6.2.1 *Centre of Gravity*

It is defined as a point through which the whole weight of the body is assumed to act. It is a term used for all actual physical bodies of any size, shape or dimensions e.g. book, cupboard, human beings, dam, car, etc.

6.2.2 *Centroid*

The significance of centroid is same as centre of gravity. It is a term used for centre of gravity of all plane geometrical figures. For example, two dimensional figures (Areas) like a triangle, rectangle, circle, and trapezium or for one dimensional figures (Lines) like circular arc, straight lines, bent up wires, etc.

6.3 Relation for Centre of Gravity

Consider a body of weight W whose centre of gravity is located at G $(\bar{X}, \bar{Y})$ as shown. If the body is split in n parts, each part will have its elemental weight W_i acting through its centre of gravity located at G_i (x_i, y_i). Refer Fig. 6.1

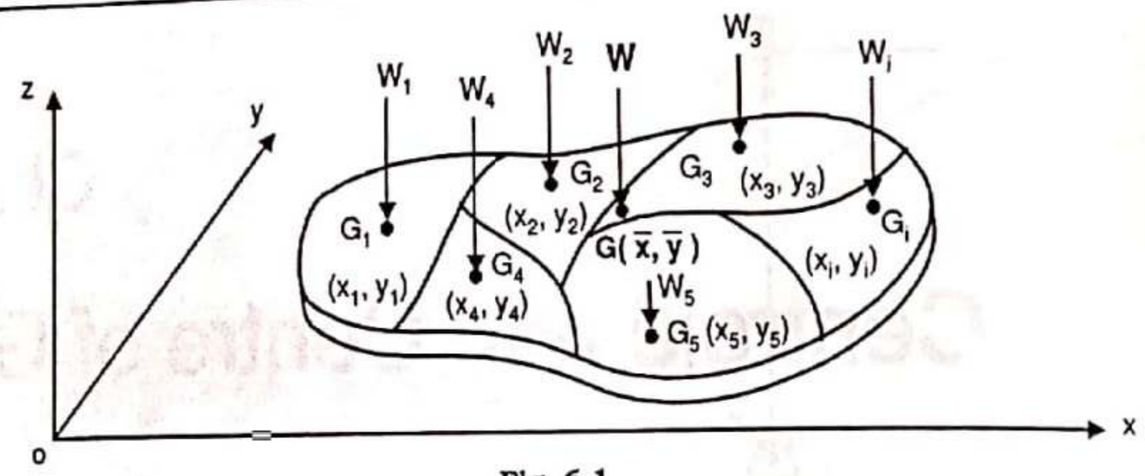

Fig. 6.1

The individual weights W_1, W_2, W_3, ... W_i ..... W_n form a system of parallel forces. The resultant weight of the body would then be

$$W = W_1 + W_2 + W_3 \ldots\ldots + W_i \ldots\ldots W_n$$

$$= \Sigma W_i$$

To locate the point of application of the resultant weight force W using Varignon's theorem (discussed earlier in Chapter 2).

Taking moments about y axis

Moments of individual weights about y axis = Moment of the total weight about y axis

$$W_1 \times x_1 + W_2 \times x_2 + \ldots + W_i \times x_i \ldots\ldots + W_n \times x_n = W \times \overline{X}$$

$$\Sigma W_i x_i = W \times \overline{X}$$

$$\overline{X} = \frac{\Sigma W_i x_i}{W} = \frac{\Sigma W_i x_i}{\Sigma W_i} \qquad \ldots\ldots\ldots \textbf{6.1 (a)}$$

Similarly if the moments are taken about x axis

Moments of individual weights about x axis = Moment of the total weight about x axis

$$W_1 \times y_1 + W_2 \times y_2 + \ldots + W_i \times y_i \ldots\ldots + W_n \times y_n = W \times \overline{Y}$$

$$\Sigma W_i y_i = W \times \overline{Y}$$

$$\overline{Y} = \frac{\Sigma W_i y_i}{W} = \frac{\Sigma W_i y_i}{\Sigma W_i} \qquad \ldots\ldots\ldots \textbf{6.1 (b)}$$

Using the relations 6.1 (a) and 6.1 (b), the centre of gravity G of a body having co-ordinates $(\overline{X}, \overline{Y})$ can be located.

6.3.1 *Relation for Centroid*

We recall that weight = mass × g
= (Density × Volume) × g
= (Density × Area × Thickness) × g
$W = \rho \times A \times t \times g$
$= (\rho \times t \times g)\, A$

For uniform bodies i.e. of same density and thickness throughout the body, we get,

$$\overline{X} = \frac{\Sigma(\rho \times t \times g) A_i x_i}{\Sigma(\rho \times t \times g) A_i} = \frac{\Sigma A_i x_i}{\Sigma A_i} \qquad \ldots\ldots\ldots \textbf{6.2 (a)}$$

Similarly,

$$\overline{Y} = \frac{\Sigma(\rho \times t \times g) A_i y_i}{\Sigma(\rho \times t \times g) A_i} = \frac{\Sigma A_i y_i}{\Sigma A_i} \qquad \ldots\ldots\ldots \textbf{6.2 (b)}$$

Using the relation 6.2 (a) and 6.2 (b), the centroid G having co-ordinates $(\overline{X}, \overline{Y})$ of a plane area can be located.

6.4 Axis Of Symmetry (A. O. S.)

Axis Of Symmetry is defined as the line which divides the figure into two equal parts such that each part is a mirror image of the other.

If the geometrical figure whose centroid has to be located is a symmetrical figure, then the centroid will lie on the axis of symmetry (A.O.S.). If the figure has more than one axis of symmetry, the centroid will lie on the intersection of the axis of symmetry. Fig 6.2 below shows the importance of identifying the axis of symmetry.

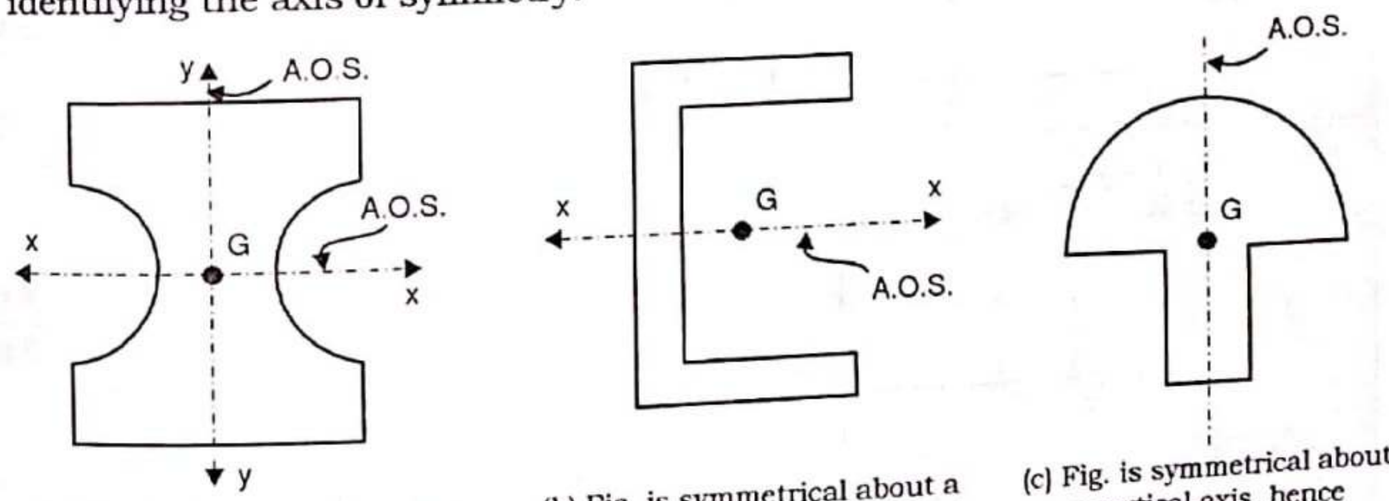

(a) Fig. having more than one A.O.S., hence centroid lies on their intersection

(b) Fig. is symmetrical about a horizontal axis, hence centroid lies on the horizontal axis.

Fig. 6.2

(c) Fig. is symmetrical about a vertical axis, hence centroid lies on vertical axis.

6.5 Centroids of Regular Plane Areas

Table 6.1 shows the centroids of regular plane areas. The co-ordinates $(\overline{X}, \overline{Y})$ of the centroid 'G' are with respect to the axis shown in the figure.

SR. NO.	FIGURE	AREA	$\bar{X}$	$\bar{Y}$
1.	RECTANGLE 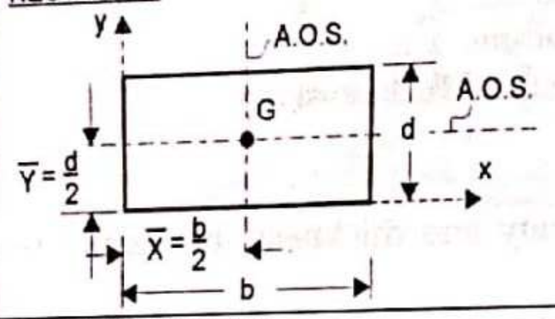	$b \times d$	$\frac{b}{2}$	$\frac{d}{2}$
2.	RT. ANGLE TRIANGLE 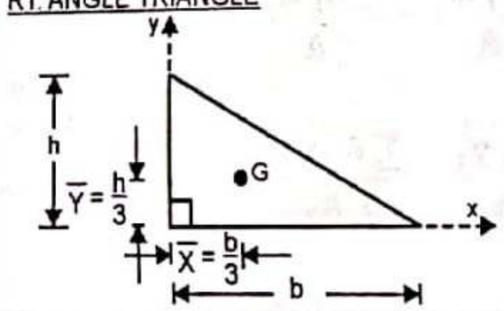	$\frac{1}{2} \times b \times h$	$\frac{b}{3}$	$\frac{h}{3}$
3.	ANY TRIANGLE 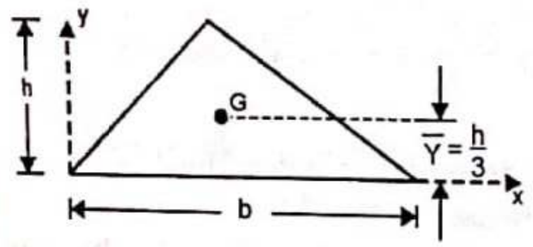	$\frac{1}{2} \times b \times h$	–	$\frac{h}{3}$
4.	SEMI-CIRCLE 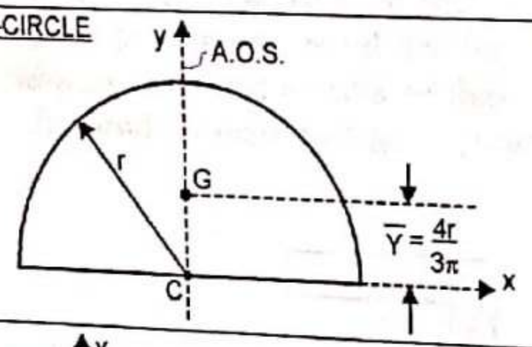	$\frac{\pi r^2}{2}$	0	$\frac{4r}{3\pi}$
5.	QUARTER CIRCLE 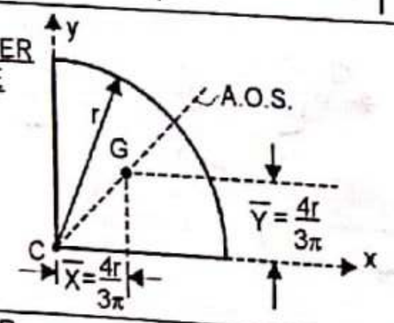	$\frac{\pi r^2}{4}$	$\frac{4r}{3\pi}$	$\frac{4r}{3\pi}$
6.	SECTOR 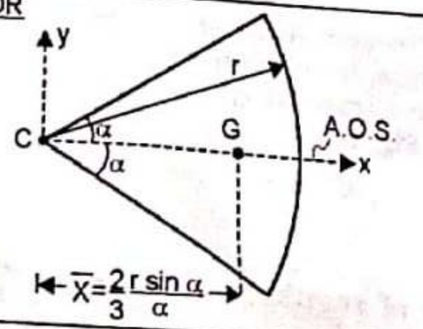	$r^2\alpha$ *	$\frac{2r\sin\alpha}{3\alpha}$ #	0

* α is in radians

Table 6.1

α in the denominator is in radians

6.6 Centroid of Composite Area

An area made up of number of regular plane areas is known as a Composite Area.

To locate the centroid of a composite area, adopt the following procedure.

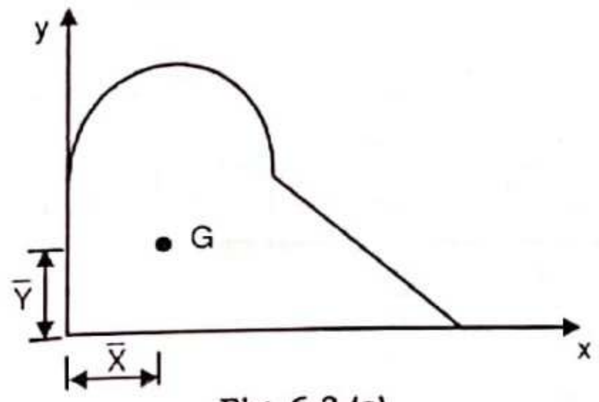

Fig. 6.3 (a)

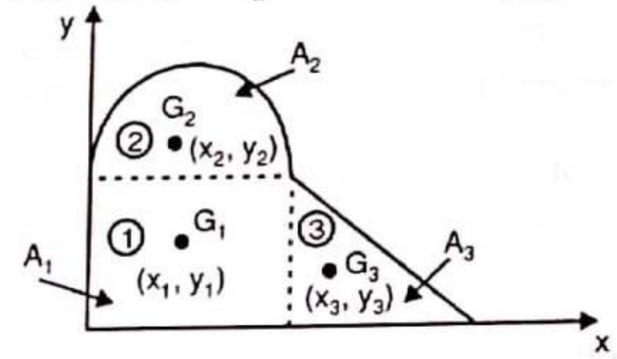

Fig. 6.3 (b)

PART	AREA A_i	CO-ORDINATES X_i	CO-ORDINATES Y_i	$A_i.X_i$	$A_i.Y_i$
1.RECTANGLE	A_1	X_1	Y_1	$A_1.X_1$	$A_1.Y_1$
2. SEMI-CIRCLE	A_2	X_2	Y_2	$A_2.X_2$	$A_2.Y_2$
3.RT. ANGLE TRIANGLE	A_3	X_3	Y_3	$A_3.X_3$	$A_3.Y_3$
	ΣA_i			$\Sigma A_i.X_i$	$\Sigma A_i.Y_i$

Table 6.2

1. Divide the composite area into regular areas as in Fig. 6.3 (b)

2. Mark the centroids G_1, G_2, G_3, ... on the composite figure as shown in Fig. 6.3 (b) and find their co-ordinates w. r. t. the given axis. Let the area of a regular part be A_i and the co-ordinates be X_i and Y_i.

3. Prepare a table as shown (Table 6.2)

4. a) Add up the areas of the different parts to get ΣA_i
   b) Add up the product of area and x co-ordinate of different parts to get $\Sigma A_i.X_i$
   c) Add up the product of area and y co-ordinate of different parts to get $\Sigma A_i.Y_i$

5. The co-ordinates of the centroid of the composite figure are obtained by using relations 6.2 (a) and 6.2 (b) viz.

$$\bar{X} = \frac{\Sigma A_i x_i}{\Sigma A_i} \quad \text{and} \quad \bar{Y} = \frac{\Sigma A_i Y_i}{\Sigma A_i}$$

6.7 Application of Centre of Gravity

For solution of certain engineering problems, we require the location of centre of gravity. Following examples explain the importance of location of centre of gravity.

(i) The centre of gravity for vehicles should be at minimum distance from the ground, so that tipping of the vehicles is avoided while negotiating curves at high speed. Refer Fig 6.4

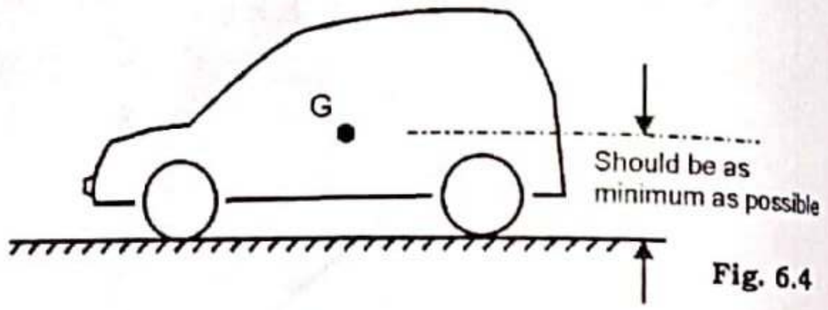

Fig. 6.4

(ii) In case of dam, which is a structure built across a river to store water, the centre of gravity of the dam should lie within the middle one-third of the base of the dam. If the C. G. goes beyond the middle one-third, the dam may loose its stability. Refer Fig. 6.5

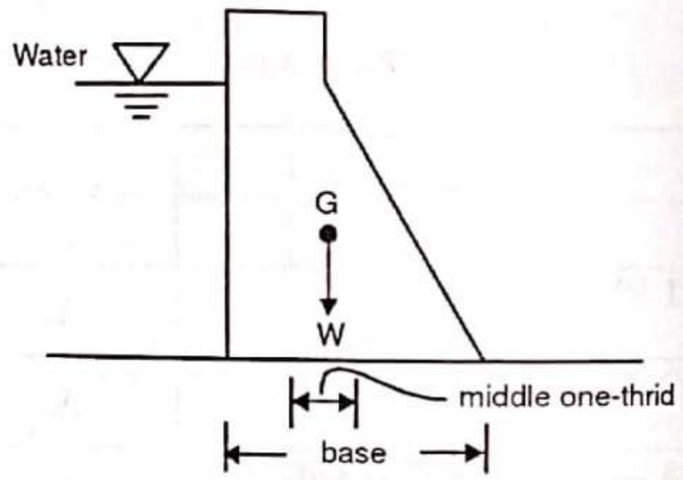

Fig. 6.5

(iii) Another area where location of C.G. becomes important is in design of dams. The water pressure exerted on the face of the dam varies along the depth, being zero at the water surface and having a maximum intensity Υh at the base (where Υ is the unit weight of water).
This load diagram is triangular in shape and therefore the resultant pressure due to water acting on the dam would be the area of the triangle.

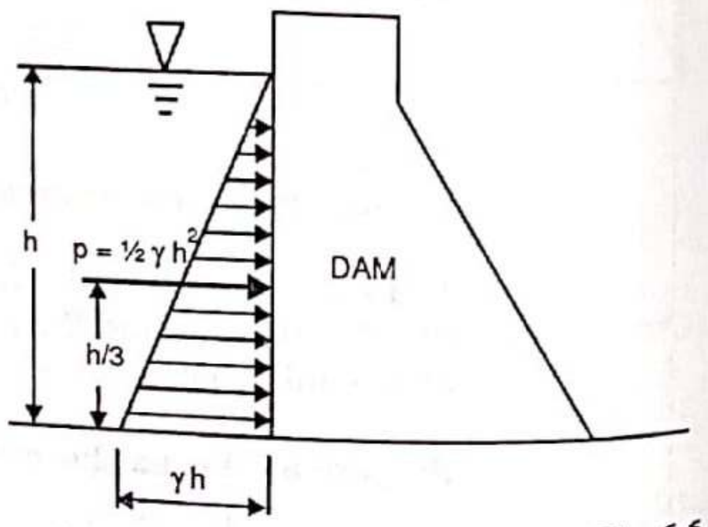

Fig. 6.6

Resultant water pressure $P = \frac{1}{2} \times \Upsilon h \times h = \frac{1}{2} \Upsilon h^2$ shall act at the C.G. of the triangle i. e. at h/3 from the base of the dam. Refer Fig. 6.6

(iv) Centroid location becomes important in case of beams which carry distributed load in the form of load diagram whose equation is $y = f(x)$ as shown in Fig. 6.7. The resultant of the distributed load lies at the Centroid of the load diagram and its value W is equal to the area under the load diagram.

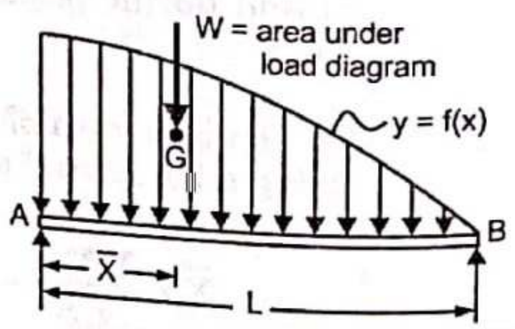

Fig. 6.7

Ex. 6.1 Determine the centroid coordinates of the six figures given below.

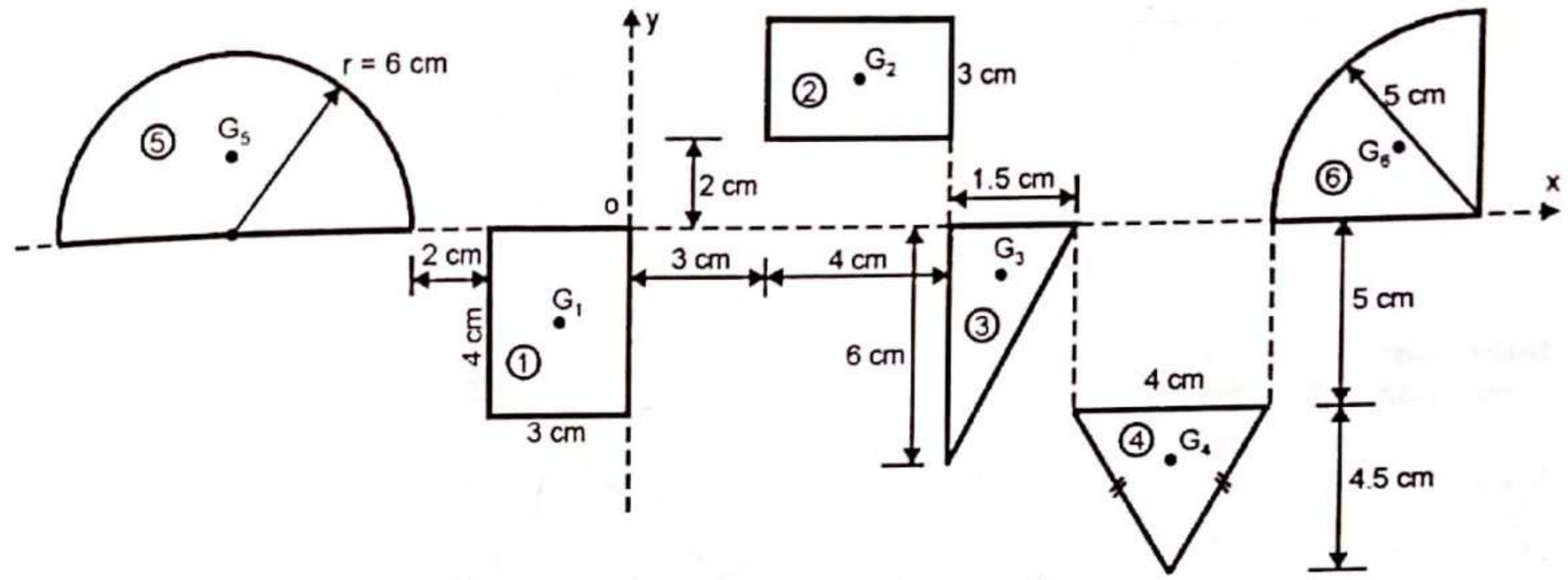

Fig. 1 Rectangle:

$$x_1 = -\left[\frac{b}{2}\right] = -\left[\frac{3}{2}\right] = -1.5\,\text{cm}$$

$$y_1 = -\left[\frac{d}{2}\right] = -\left[\frac{4}{2}\right] = -2\,\text{cm}$$

$\therefore \quad G_1 = (-1.5, -2)\,\text{cm}$ ..... **Ans.**

Fig. 2 Rectangle:

$$x_2 = \left[3 + \frac{b}{2}\right] = \left[3 + \frac{4}{2}\right] = 5\,\text{cm}$$

$$y_2 = \left[2 + \frac{d}{2}\right] = \left[2 + \frac{3}{2}\right] = 3.5\,\text{cm}$$

$\therefore \quad G_2 = (5,\ 3.5)\ \text{cm}$ ..... **Ans.**

Fig. 3 Rt. Angled triangle

$$x_3 = \left[7 + \frac{b}{3}\right] = \left[7 + \frac{1.5}{3}\right] = 7.5\,\text{cm}$$

$$y_3 = -\left[\frac{h}{3}\right] = -\left[\frac{6}{3}\right] = -2\,\text{cm}$$

$\therefore \quad G_3 = (7.5, -2)\ \text{cm}$ ..... **Ans.**

Fig. 4 Any triangle

$$x_4 = \left[8.5 + \frac{b}{2}\right] = \left[8.5 + \frac{4}{2}\right] = 10.5\,\text{cm}$$

$$y_4 = -\left[5 + \frac{h}{3}\right] = -\left[5 + \frac{4.5}{3}\right] = -6.5\,\text{cm}$$

$\therefore \quad G_4 = (10.5, -6.5)\ \text{cm}$ ..... **Ans.**

Fig. 5 semi circle.

$$x_5 = -[5 + 6] = -11\,\text{cm}$$

$$y_5 = \frac{4r}{3\pi} = \frac{4 \times 6}{3\pi} = 2.546\,\text{cm}$$

$\therefore \quad G_5 = (-11,\ 2.546)\ \text{cm}$ ..... **Ans.**

Fig. 6 Quarter circle.

$$x_6 = \left[17.5 - \frac{4r}{3\pi}\right] = \left[17.5 - \frac{4 \times 5}{3\pi}\right]$$

$$= 15.378\,\text{cm}$$

$$y_5 = \frac{4r}{3\pi} = \frac{4 \times 5}{3\pi} = 2.12\,\text{cm}$$

$\therefore \quad G_6 = (15.378,\ 2.12)\ \text{cm}$ ..... **Ans.**

Ex. 6.2 Find the centroid of the shaded area shown.

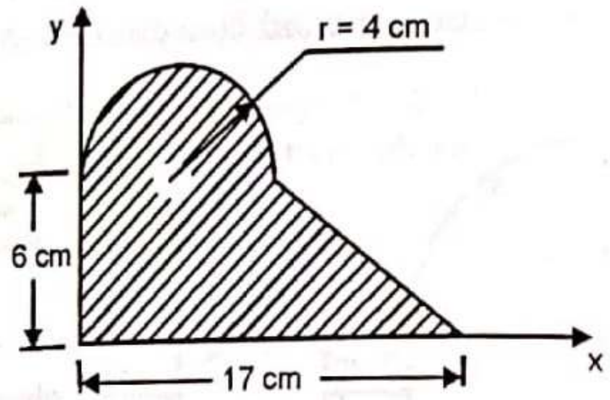

Solution: The composite area can be obtained by adding a rectangle, a rt-angle triangle and a semi-circle. Mark the points G_1, G_2, and G_3 as shown in figure. The areas and the co-ordinates are entered in the table.

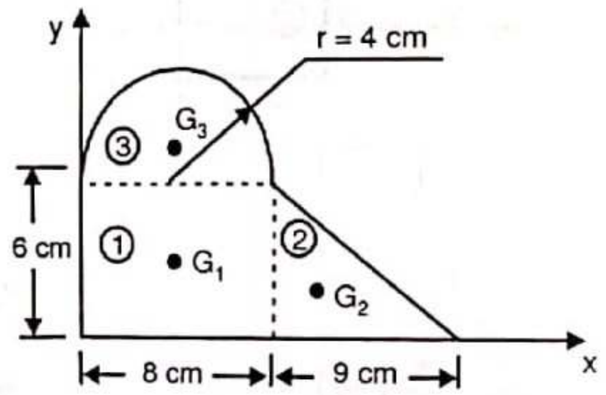

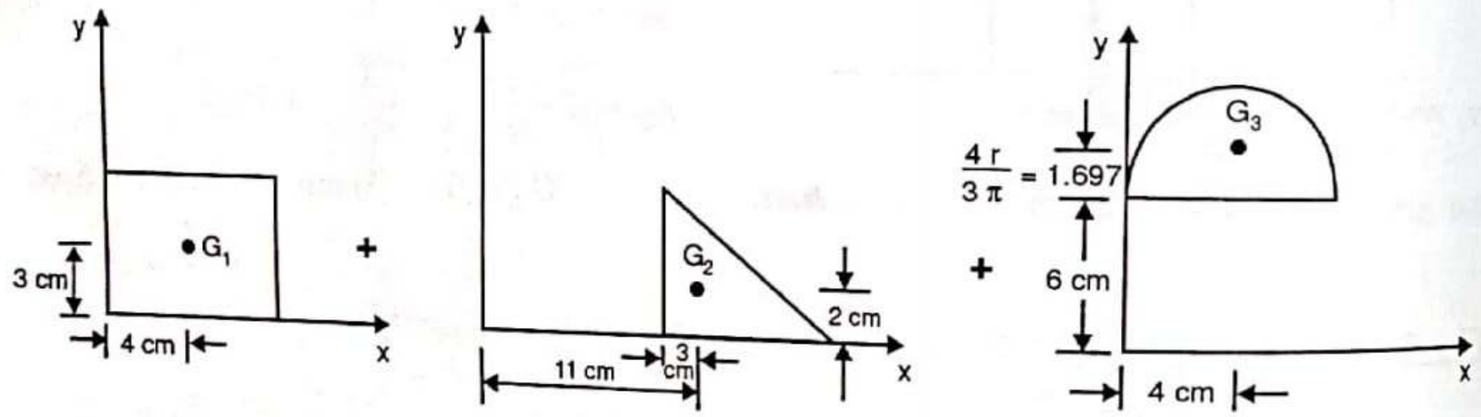

PART	AREA A_i cm²	Co-ordinates		$A_i.X_i$ cm³	$A_i.Y_i$ cm³
		X_i cm	Y_i cm		
1. Rectangle	8 × 6 = 48	4	3	192	144
2. Rt. triangle	½ × 9 × 6 = 27	11	2	297	54
3. Semi-circle	½ π (4)² = 25.13	4	7.69	100.53	193.44
	ΣA_i = 100.13			$\Sigma A_i.X_i$ = 589.53	$\Sigma A_i.Y_i$ = 391.44

Using $\overline{X} = \dfrac{\Sigma A_i X_i}{\Sigma A_i} = \dfrac{589.53}{100.13} = 5.88$ cm and $\overline{Y} = \dfrac{\Sigma A_i Y_i}{\Sigma A_i} = \dfrac{391.44}{100.13} = 3.91$ cm

$\therefore \quad (\overline{X}, \overline{Y}) = (5.88, 3.91)$ cm

..... **Ans.**

Ex. 6.3 Find centroid of the shaded area shown.

(MU May 13)

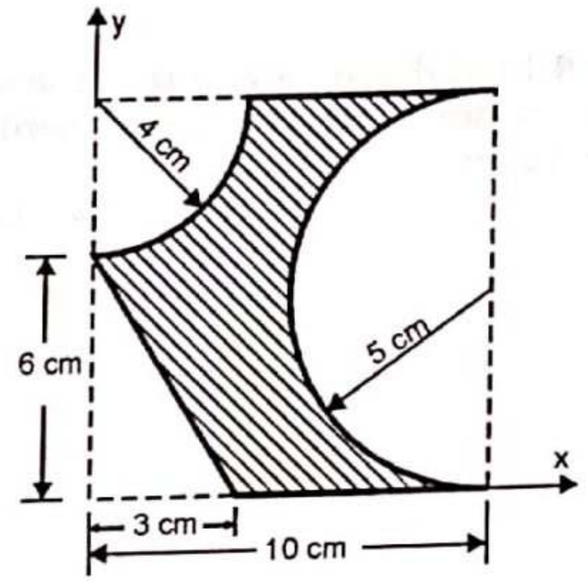

Solution: The shaded area can be obtained by taking an entire square of 10 cm × 10 cm and subtracting a quarter-circle, a triangle and a semicircle.

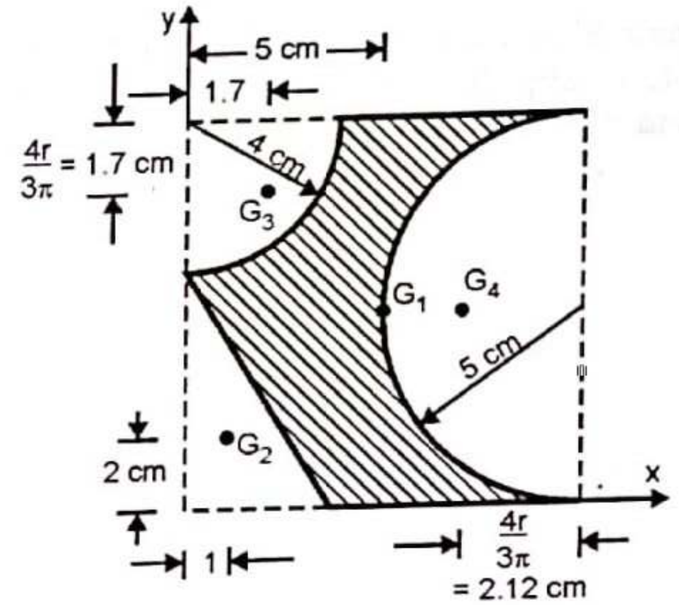

Part	Area (A_i) cm²	x_i cm	y_i cm	A_ix_i cm³	A_iy_i cm³
1. Square	100	5	5	500	500
2. Rt. Triangle	- 9	1	2	- 9	- 18
3. Quarter-circle	- 12.57	1.697	8.302	- 21.32	- 104.33
4. Semi-circle	- 39.27	7.878	5	- 309.37	- 196.35
	ΣA_i = 39.16			ΣA_ix_i = 160.31	ΣA_iy_i = 181.32

$\overline{X} = \dfrac{\Sigma A_i x_i}{\Sigma A_i} = \dfrac{160.31}{39.16} = 4.09$ cm and $\overline{Y} = \dfrac{\Sigma A_i y_i}{\Sigma A_i} = \dfrac{181.32}{39.16} = 4.63$ cm

$\therefore \quad \overline{X}, \overline{Y} = (4.09, 4.63)$ cm ..... **Ans.**

Ex. 6.4 Find distance y so that the C.G. of given shaded area has coordinates (25, 20) mm. ***(MU Dec 07)***

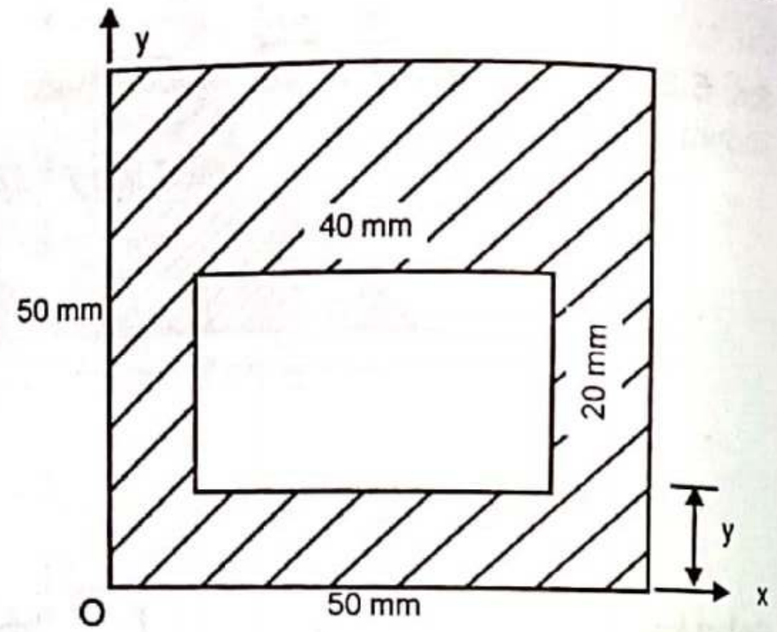

Solution: Shaded portion can be obtained by subtracting the rectangle 40 mm × 20 mm from 50 mm × 50 mm square.

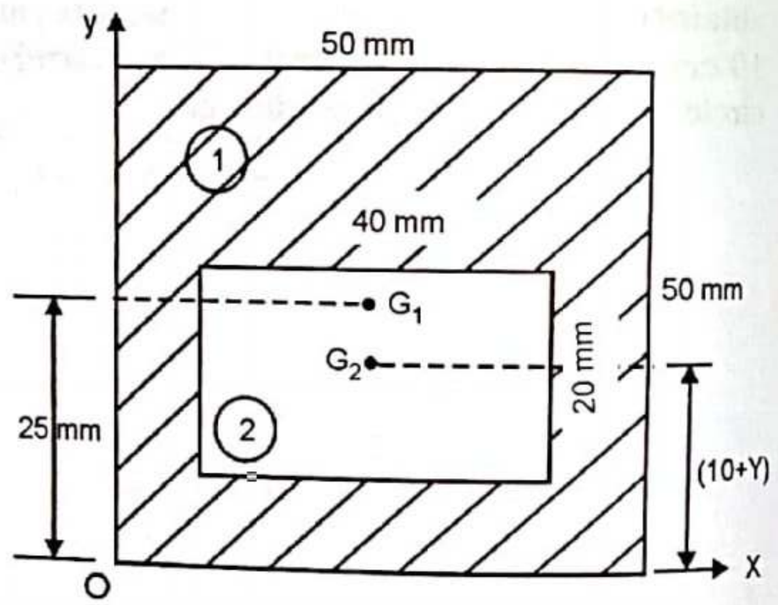

Part	Area A_i (mm²)	Coordinate Y_i (mm)	$A_i Y_i$ (mm³)
1. Square	2500	25	62500
2. rectangle	– 800	(10 + y)	– 8000 – 800 y
	ΣA = 1700		ΣAy = 54500 – 800y

Using $\overline{Y} = \dfrac{\Sigma A_i y_i}{\Sigma Ai} = \dfrac{54500 - 800y}{1700}$

$\therefore \quad 20 = \dfrac{54500 - 800y}{1700}$

$\therefore \quad y = 25.625$ mm ..... **Ans.**

Ex. 6.5 Determine the centroid of the plane lamina. Shaded portion is removed. ***(MU Dec 17)***

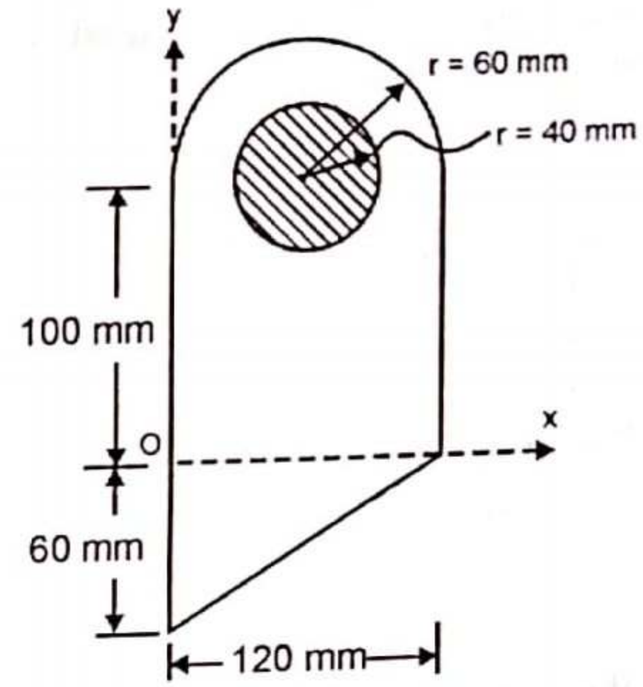

Solution: The given plane lamina can be obtained by adding a rectangle, a semi-circle, a rt-angle triangle and subtracting a circle.

Let us mark G_1, G_2, G_3 and G_4 the centroid of the four parts as shown in figure. Entering the areas and the co-ordinates in the table below.

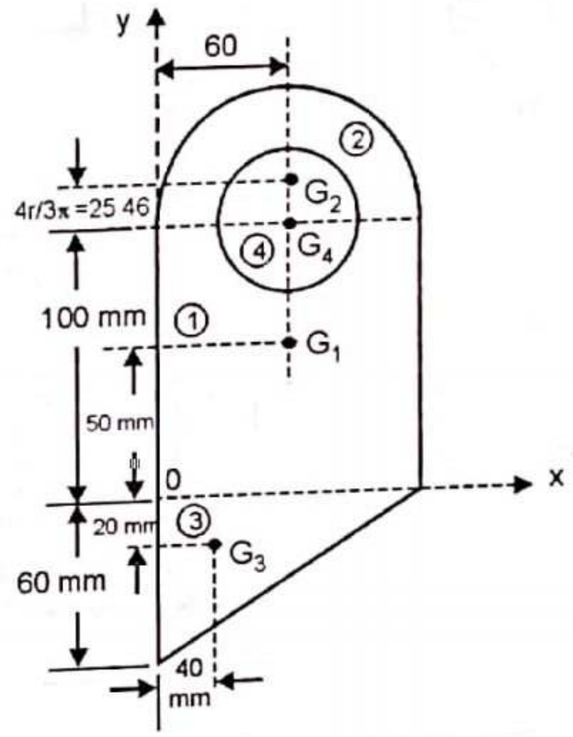

PART	AREA A_i, mm²	Co-ordinates X_i mm	Co-ordinates Y_i mm	A_iX_i mm³	A_iY_i mm³
1. Rectangle	100 × 120 = 12000	60	50	720000	600000
2. Semi-Circle	½ π (60)² = 5654.8	60	125.46	339288	709478
3. Rt. Angled Δ	½ × 120 × 60 = 3600	40	– 20	144000	– 72000
4. Circle	– π (40)² = – 5026.5	60	100	– 301593	– 502650
	ΣA_i = 16228.3			ΣA_iX_i = 901695	ΣA_iY_i = 734828

Using $\overline{X} = \dfrac{\Sigma A_i X_i}{\Sigma A_i} = \dfrac{901695}{16228.3} = 55.56$ mm and $\overline{Y} = \dfrac{\Sigma A_i Y_i}{\Sigma A_i} = \dfrac{734828}{16228.3} = 45.28$ mm

$\therefore \quad (\overline{X}, \overline{Y}) = (55.56, 45.28)$ mm ..... **Ans.**

Ex. 6.6 Locate the centroid of the shaded plane lamina shown in figure.

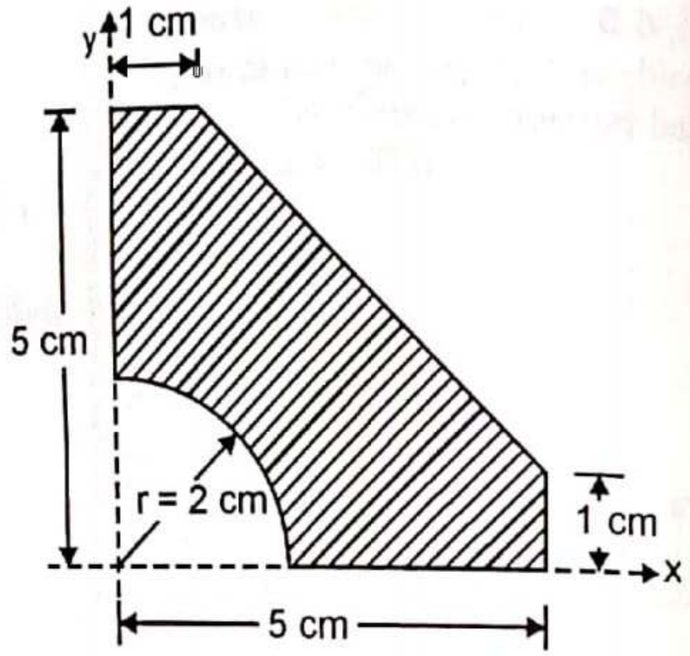

Solution: We can obtain the shaded figure by completing the square of 5 cm × 5 cm and subtracting the quarter circle and a rt. angle triangle from it.

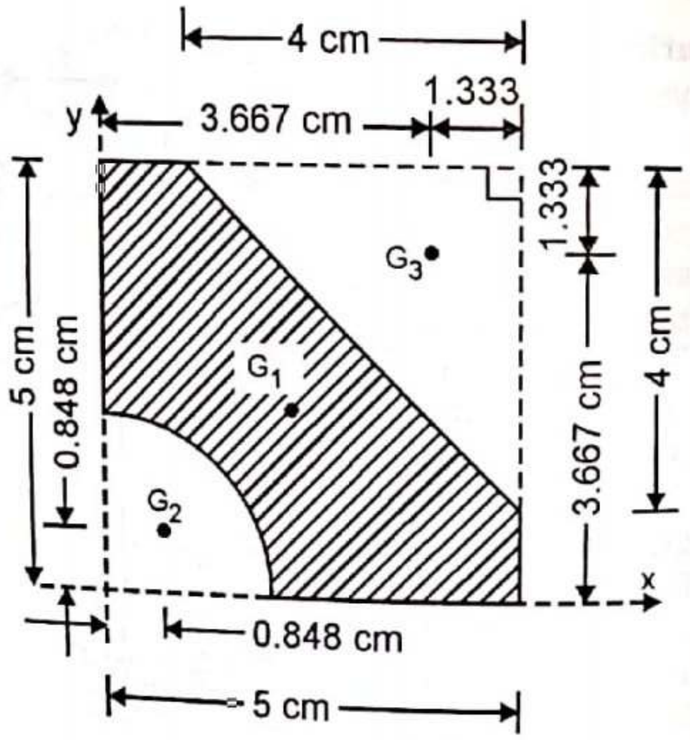

PART	AREA A_i, cm²	Co-ordinates (cm)		A_iX_i cm³	A_iY_i cm³
		X_i	Y_i		
1. SQUARE	25	2.5	2.5	62.5	62.5
2. QUARTER-CIRCLE	– 3.14	0.8488	0.8488	– 2.66	– 2.66
3. RT-ANG.TRIANGLE	– 8	3.667	3.667	– 29.33	– 29.33
	ΣA_i = 13.86			ΣA_iX_i = 30.51	ΣA_iY_i = 30.51

Using $\overline{X} = \frac{\Sigma A_i X_i}{\Sigma A_i} = \frac{30.51}{13.86} = 2.2$ cm and $\overline{Y} = \frac{\Sigma A_i Y_i}{\Sigma A_i} = \frac{30.51}{13.86} = 2.2$ cm

∴ Centroid 'G' of the plane area has co-ordinates, $(\overline{X}, \overline{Y})$ = (2.2, 2.2) cm.... **Ans.**

Ex. 6.7 Determine the centroid of the plane lamina shown.

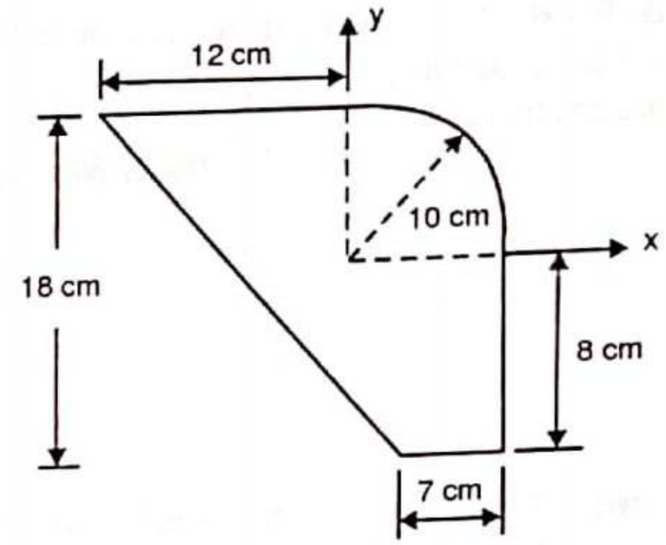

Solution : The given plane area can be obtained by taking a rectangle of 22 cm × 8 cm, adding another rectangle of 12 cm × 10 cm, adding a quarter circle of radius 10 cm and removing a rt-angle triangle of base 15 cm and height 18 cm as shown in figure. Marking the centroid of the four parts as G_1, G_2, G_3 and G_4 on the figure. The areas of the different parts and the co-ordinates of their centroids are entered in the table.

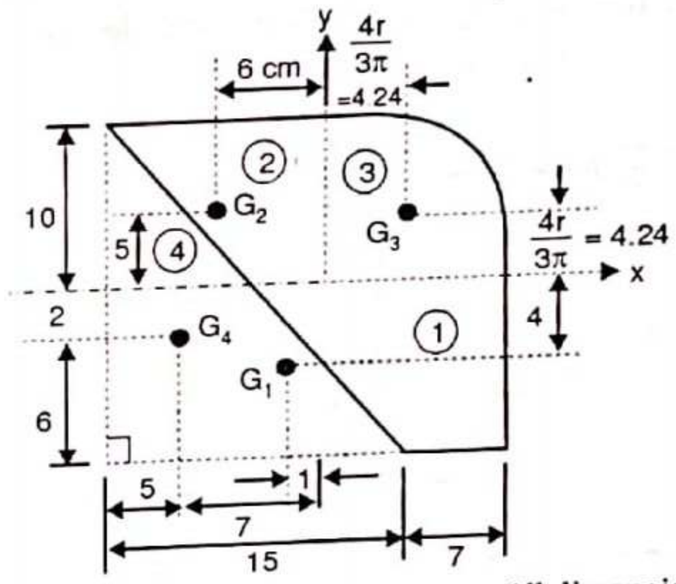

All dimensions are in cm

PART	AREA A_i, cm²	Co-ordinates (cm)		A_iX_i cm³	A_iY_i cm³
		X_i	Y_i		
1. RECTANGLE	22 × 8 = 176	– 1	– 4	– 176	– 704
2. RECTANGLE	12 × 10 = 120	– 6	5	– 720	600
3. QUARTER-CIRCLE	$\frac{\pi(10)^2}{4}$ = 78.54	4.24	4.24	333	333
4. RT-ANGLE TRIANGLE	$\frac{-15\times 18}{2}$ = – 135	– 7	– 2	945	270
	ΣA_i = 239.54			ΣA_iX_i = 382	ΣA_iY_i = 499

Using $\overline{X} = \frac{\Sigma A_i X_i}{\Sigma A_i} = \frac{382}{239.54} = 1.59$ cm and $\overline{Y} = \frac{\Sigma A_i Y_i}{\Sigma A_i} = \frac{499}{239.54} = 2.08$ cm

∴ Centroid 'G' of the plane area has co-ordinates, $(\overline{X}, \overline{Y})$ = (1.59, 2.08) cm.... **Ans.**

Ex.6.8 Find the Centroid of the shaded area of the following.
All dimensions are in mm.

(KJS Nov 15)

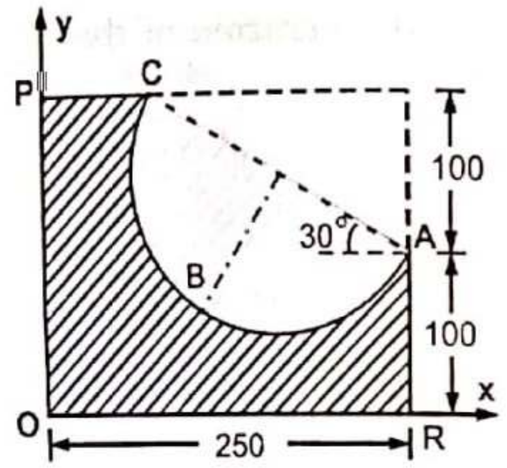

Solution: The given composite area can be obtained by taking a rectangle (Part 1), subtracting a rt. angled triangle (Part 2) and subtracting a semicircle (Part 3) from it. Working in cm units.

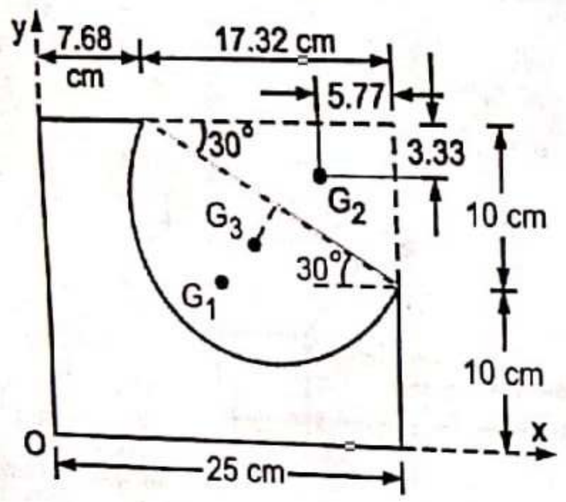

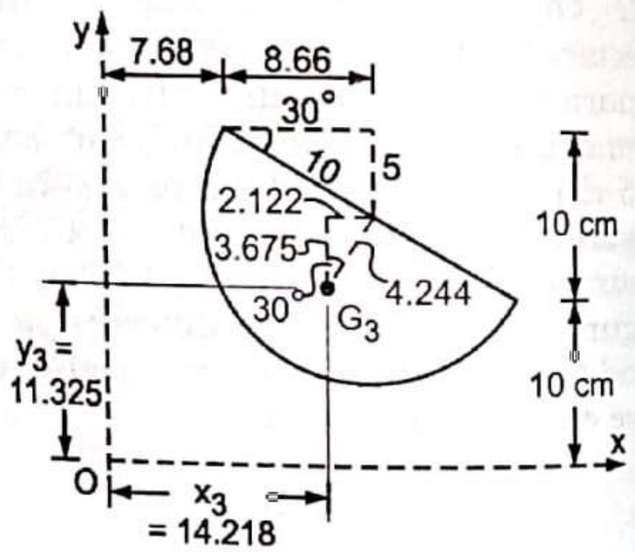

For semicircle (Part 3)

$x_3 = 7.68 + 8.66 - 2.122 = 14.218$ cm

$y_3 = 20 - 5 - 3.675 = 11.325$ cm

Part	Area A cm²	Co-ordinates x cm	Co-ordinates y cm	A x cm³	A y cm³
1. Rectangle	25 × 20 = 500	12.5	10	6250	5000
2. Rt. angled triangle	$-(\frac{1}{2} \times 17.32 \times 10)$ = − 86.6	19.23	16.67	− 1665	− 1443
3. Semicircle	$-(\pi \times 10^2)/2$ = − 157.1	14.218	11.325	− 2233	− 1779
	Σ A = 256.3			Σ A x = 2352	Σ A y = 1778

Using $\overline{X} = \frac{\Sigma Ax}{\Sigma A} = \frac{2352}{256.3} = 9.176$ cm and $\overline{Y} = \frac{\Sigma Ay}{\Sigma A} = \frac{1778}{256.3} = 6.937$ cm

$\therefore$ $\overline{X}, \overline{Y} = (9.176, 6.937)$ cm ..... **Ans.**

Ex. 6.9 A semi-circular section is removed from the plane area as shown. Find centroid of the remaining shaded area.

(VJTI Dec 13)

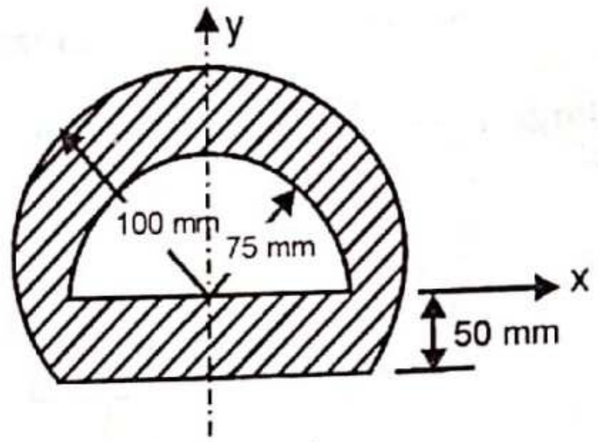

Solution: The given shaded area can be obtained by adding a sector, a triangle and subtracting a semi-circle. Marking the centroid of these three parts G_1, G_2 and G_3 as shown in figure. The area and the co-ordinates are entered in the table. The given composite area is symmetrical about the y-axis. Knowing centroid lies on the A.O.S., which is the y-axis, we have

$\overline{X} = 0$

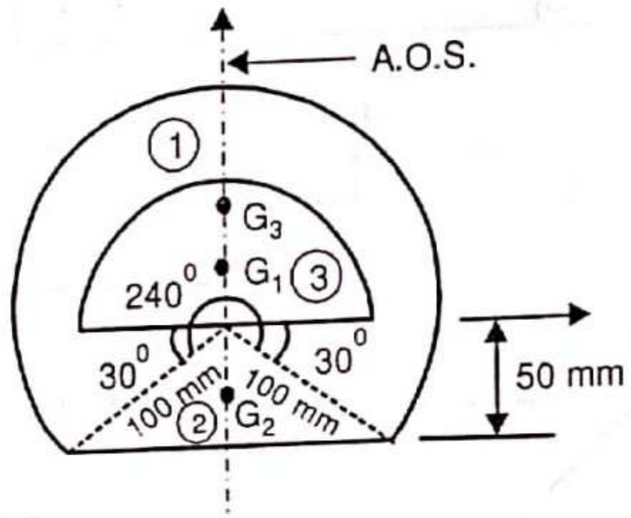

here $\alpha = \frac{240}{2} = 120° = 2.094$ radians

$\frac{2}{3} \times \frac{r \sin\alpha}{\alpha}$ $\therefore$ $\frac{2}{3} \times \frac{100 \sin 120}{2.094} = 27.56$ mm

Area $= A_1 = r^2\pi = (100)^2 \times 2.094 = 20944$ mm²

Sector

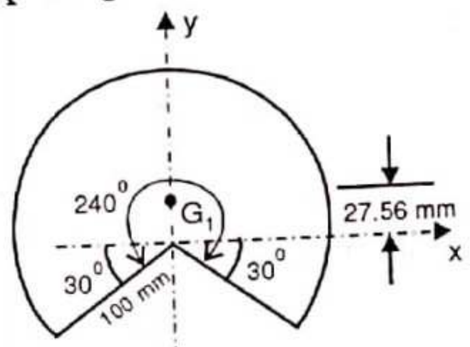

+

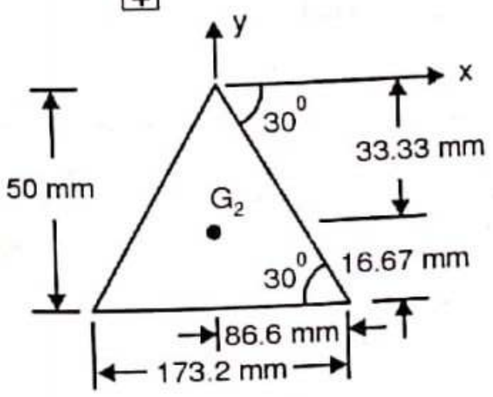

Triangle

−

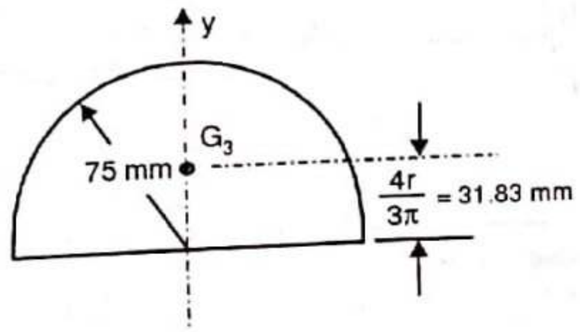

Semicircle

PART	AREA A_i, mm²	Y_i mm	A_iY_i mm³
1. SECTOR	20944	27.56	577217
2. TRIANGLE	½ × 173.2 × 50 = 4330	− 33.33	− 144319
3. SEMI-CIRCLE	− ½ π (75)² = − 8835.7	31.83	− 281241
	ΣA_i = 16438.3		$\Sigma A_i.Y_i$ = 151657

Using $\overline{Y} = \frac{\Sigma A_i Y_i}{\Sigma A_i} = \frac{151657}{16438.3} = 9.22$ mm $\therefore (\overline{X}, \overline{Y}) = (0, 9.22)$ mm ..... **Ans.**

Exercise 6.1

P1. Locate the centroiod coordinates of the given figures and fill them in the blanks. All dimensions are in cm units.

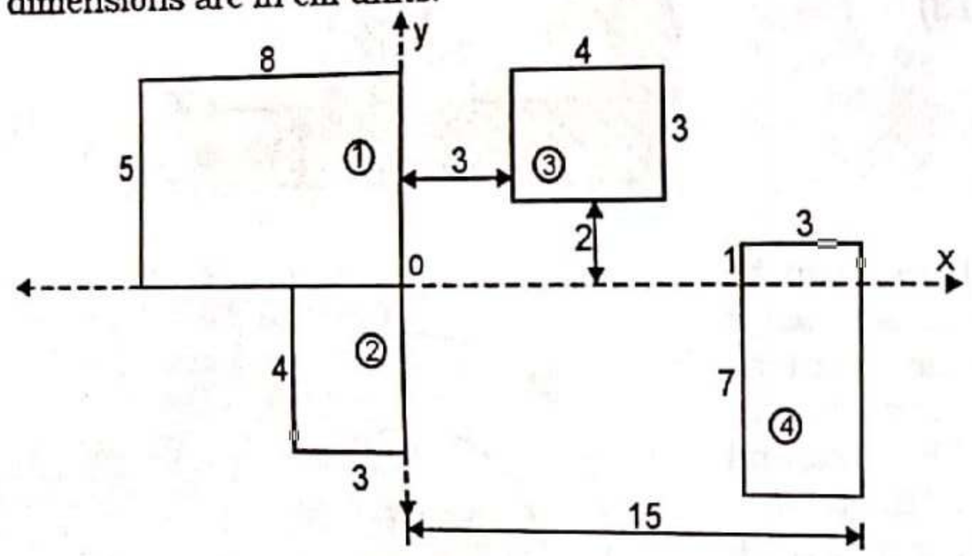

G_1 = – 4 cm , 2.5 cm

G_2 = _____ , _____

G_3 = _____ , _____

G_4 = _____ , _____

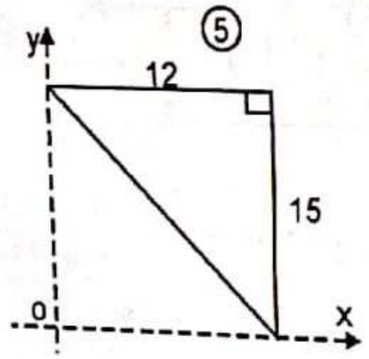

G_5 = _____ , _____

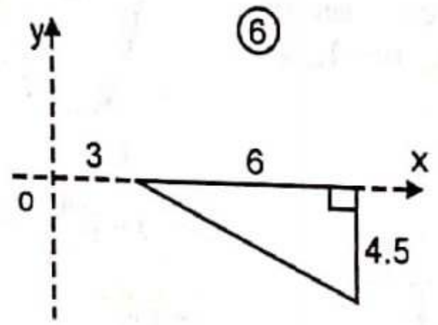

G_6 = _____ , _____

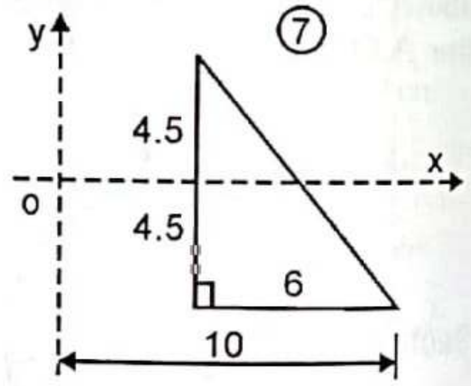

G_7 = _____ , _____

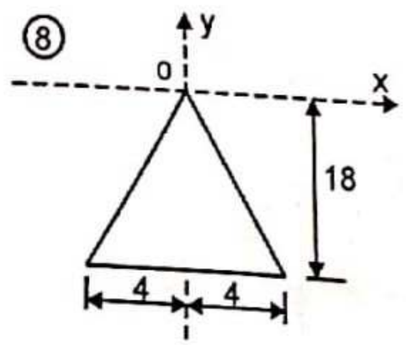

G_8 = _____ , _____

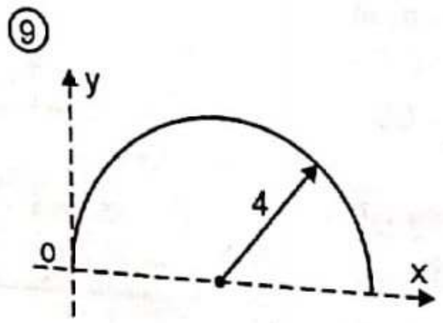

G_9 = _____ , _____

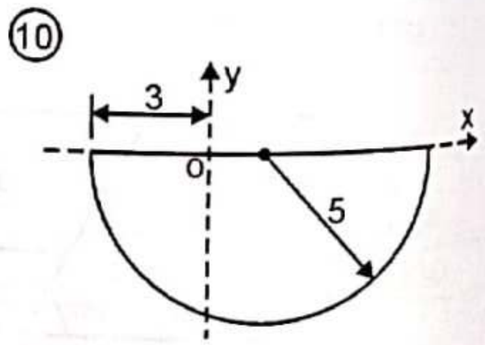

G_{10} = _____ , _____

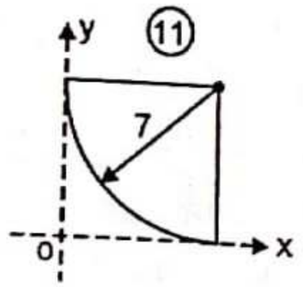

G_{11} = _____ , _____

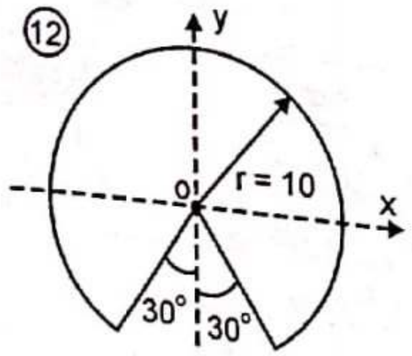

G_{12} = _____ , _____

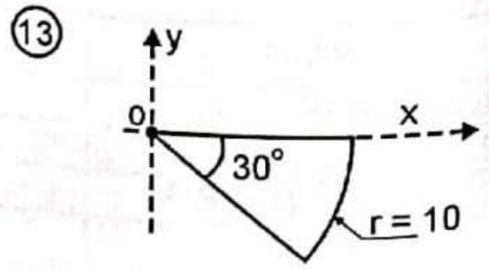

G_{13} = _____ , _____

P2. Locate the centroid of the composite figure shown.

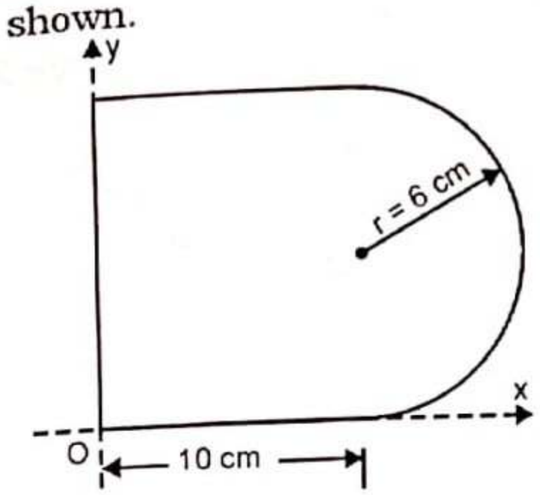

P3. A circle of diameter 1.5 m is cut from a composite plate. Determine the Centroid of the remaining area of the plate. ***(MU Dec 16)***

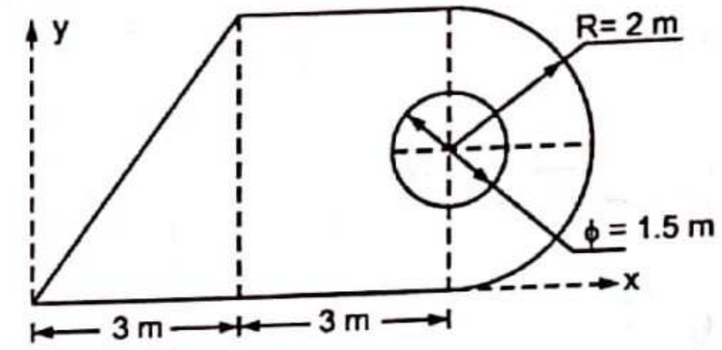

P4. Find Centroid of the shaded area. ***(KJS May 17)***

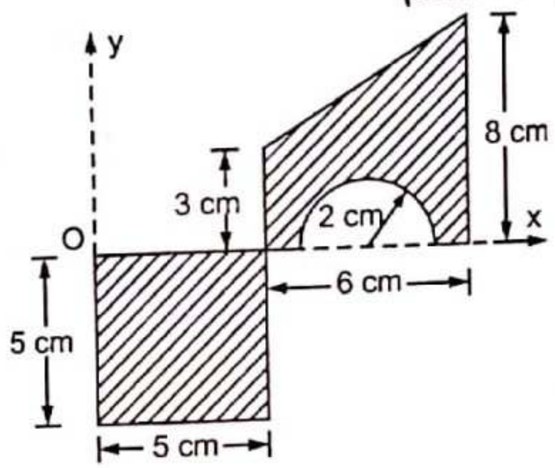

P5. Find Centroid of the shaded area. ***(MU Dec 14)***

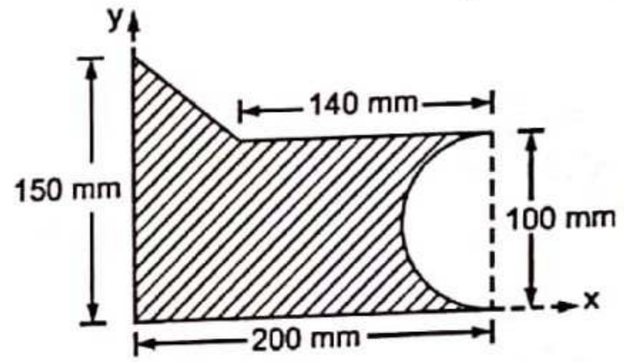

P6. Determine centroid of plane area ABCDE w.r.t. A.

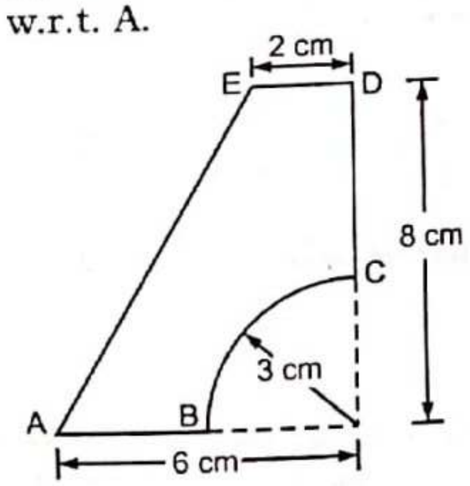

P7. Find centroid of the shaded area. ***(MU Dec 12)***

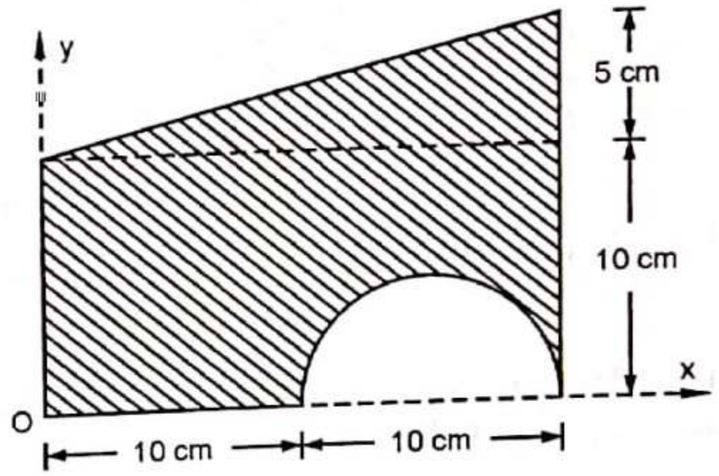

P8. G is the centroid of an equilateral triangle ABC of side 60 cm. If GBC is cut from the lamina, find the centroid of the remaining area. ***(VJTI May 06)***

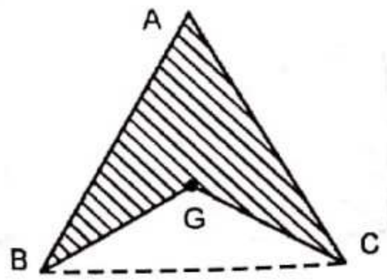

P9. Find centroid of the shaded area. ***(MU Dec 13, Dec 17)***

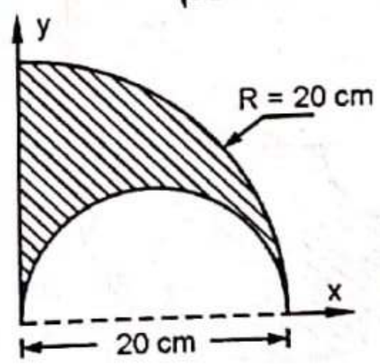

P10. Locate the centroid of the section. ***(SPCE Mar 11)***

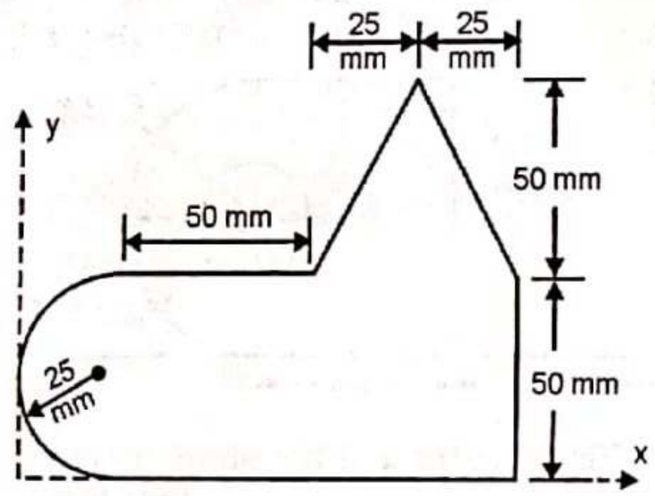

P11. Determine the centroid of the shaded area.(All dimensions are in mm). ***(MU Dec 2015)***

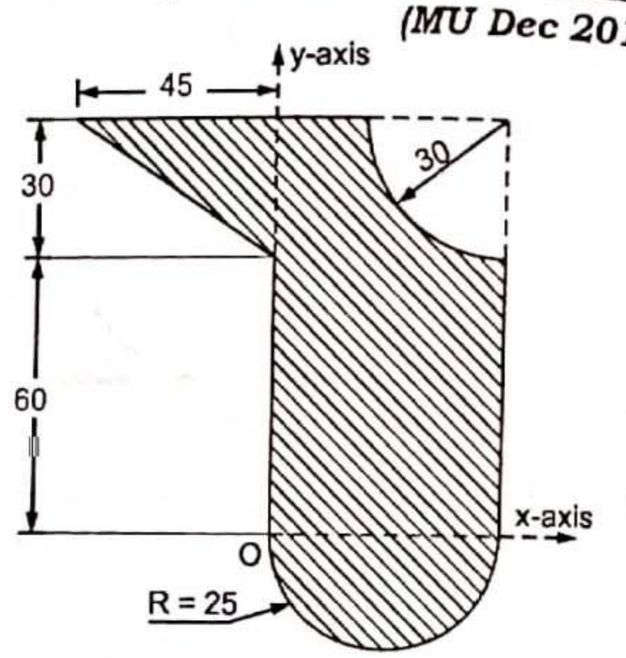

P12. Find the centroid of the shaded area shown in figure. Note that OAF is a quarter part of a circle of radius 7.5 cm.

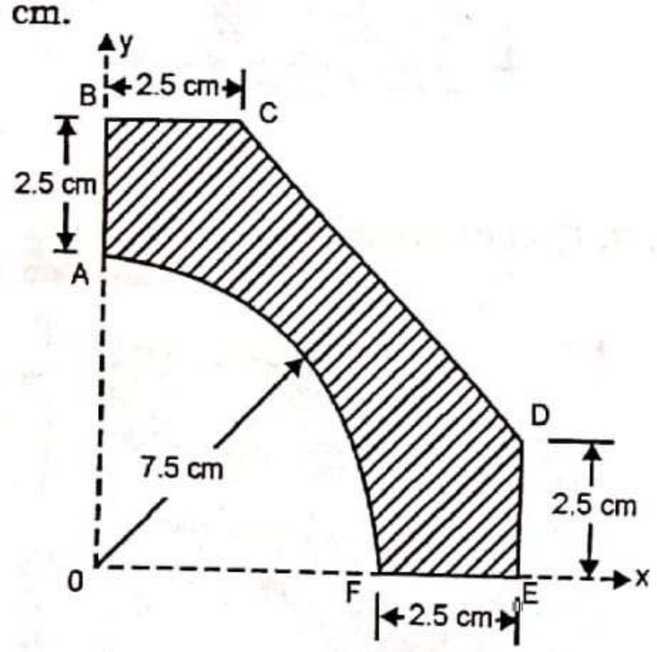

P13. Determine the co-ordinates of the centroid of the lamina shown with respect to origin. Note that the circle of diameter 50 mm is cut out from the plane lamina, with centre at (150, 25).

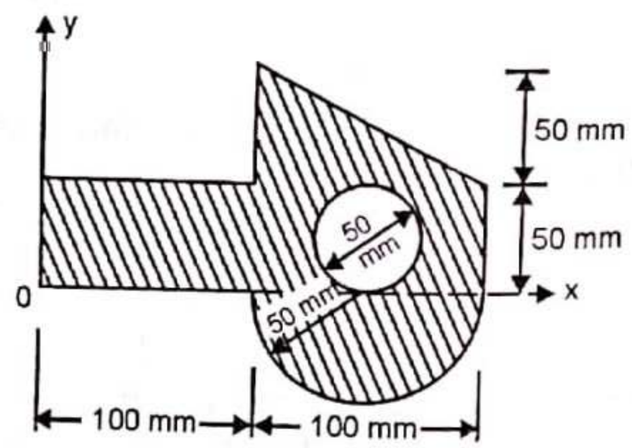

P14. Determine the centroid of the shaded portion shown.

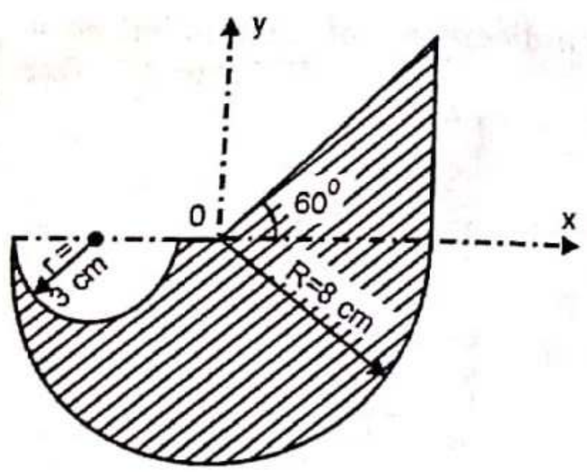

P15. Find centroid of shaded plane area. ***(MU Dec 10, VJTI Apr 17)***

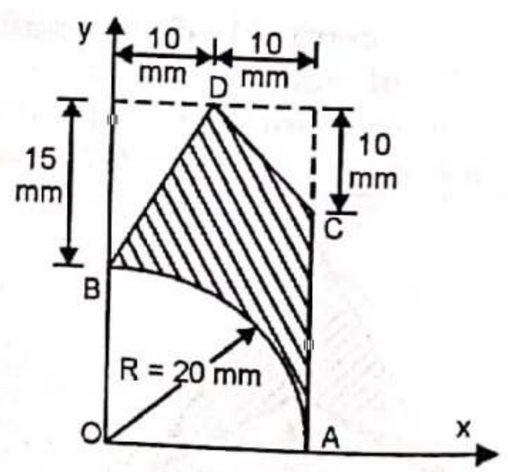

P16. Determine the centroid of the shaded area shown.

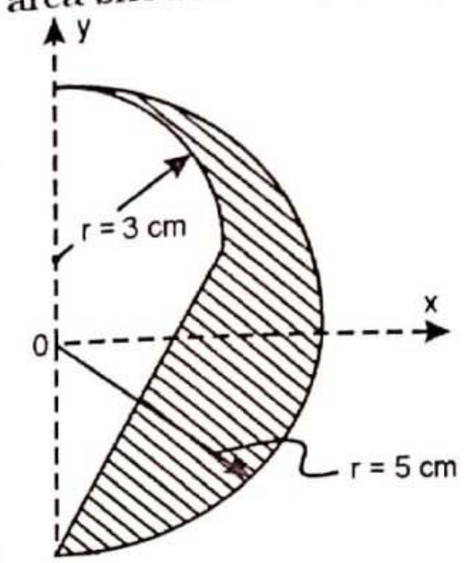

P17. Determine the centre of gravity of the shaded area ***(MU May 14)***

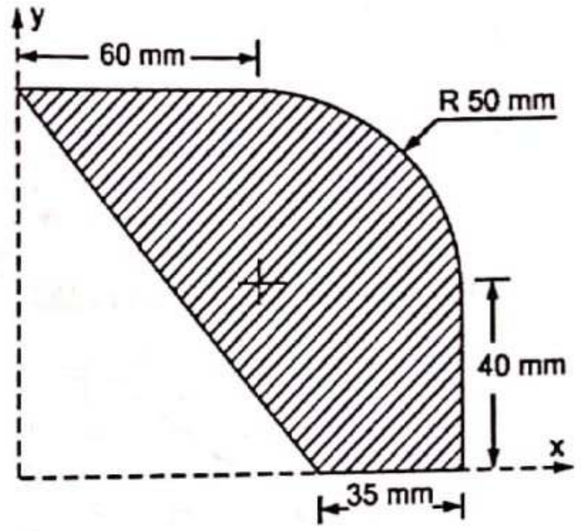

6.8 Centroid of Lines

So far we have studied to locate the centroid of plane areas. Now let us learn to find out centroid of lines which are also geometrical figures.

Lines are one dimensional figures whose length (L) is prominent than its thickness (b). The thickness also is uniform throughout the length. We therefore modify relation 6.2 (a) and (b) to obtain the relation of centroid of lines.

We recall $$\bar{X} = \frac{\sum A_i x_i}{\sum A_i} \quad \text{..... 6.2 (a)}$$

$$\therefore \quad \bar{X} = \frac{\sum (L \times b)_i x_i}{\sum (L \times b)_i} = \frac{\sum L_i x_i}{\sum L_i} \quad \text{..... 6.3 (a)}$$

also $$\bar{Y} = \frac{\sum A_i y_i}{\sum A_i} \quad \text{..... 6.2 (b)}$$

$$\therefore \quad \bar{Y} = \frac{\sum (L \times b)_i y_i}{\sum (L \times b)_i} = \frac{\sum L_i y_i}{\sum L_i} \quad \text{..... 6.3 (b)}$$

Note that thickness b cancels out since it is uniform throughout the length

The physical bodies which are equivalent to lines are bent up wires, pipe lines etc. If these bodies are uniform throughout their length, then the centroid would coincide with the centre of gravity.

6.8.1 *Centroids of Regular Lines*

Table 6.3 shows the centroid of regular lines. The co-ordinates $(\bar{X}, \bar{Y})$ of the centroid 'G' are with respect to the axis shown in the figure.

SR. NO	FIGURE	LENGTH	Co-ordinates	
			X	Y
1.	STRAIGHT HORIZONTAL LINE 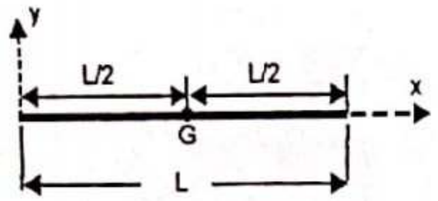	L	$\frac{L}{2}$	0
2.	STRAIGHT INCLINED LINE 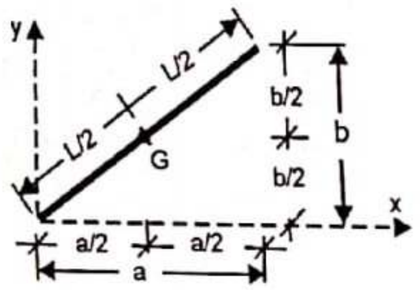	L	$\frac{a}{2}$	$\frac{b}{2}$
3.	SEMI-CIRCULAR ARC 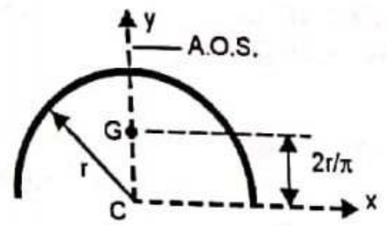	πr	0	$\frac{2r}{\pi}$
4.	QUARTER-CIRCULAR ARC 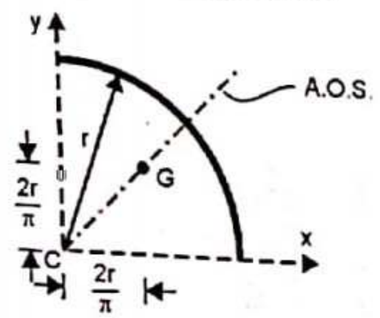	$\frac{\pi r}{2}$	$\frac{2r}{\pi}$	$\frac{2r}{\pi}$
5.	CIRCULAR ARC 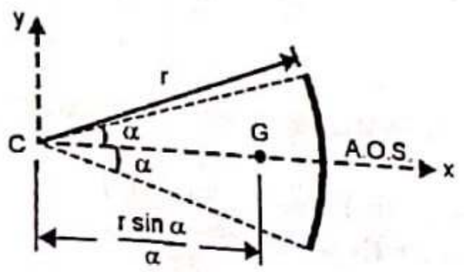	$2r\alpha$*	$\frac{r\sin\alpha}{\alpha^{\#}}$	0

* α is in radians

\# α in the denominator is in radians

Table 6.3

Ex. 6.11 A uniform wire is bent into a shape shown. Calculate position of C.G. of the wire.

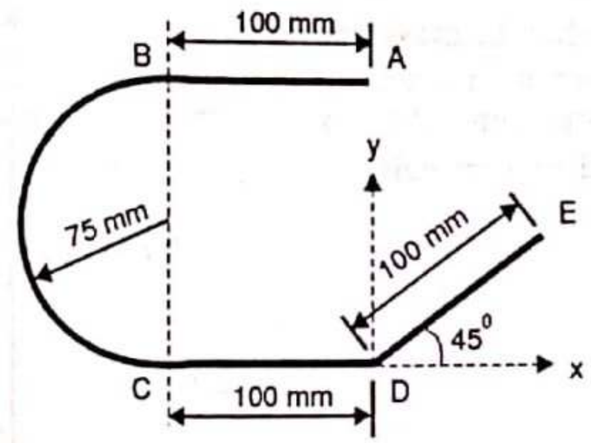

Solution : The given bent up wire can be obtained by adding two straight portions AB and CD, adding a semi-circular portion BC and adding a straight inclined portion DE.

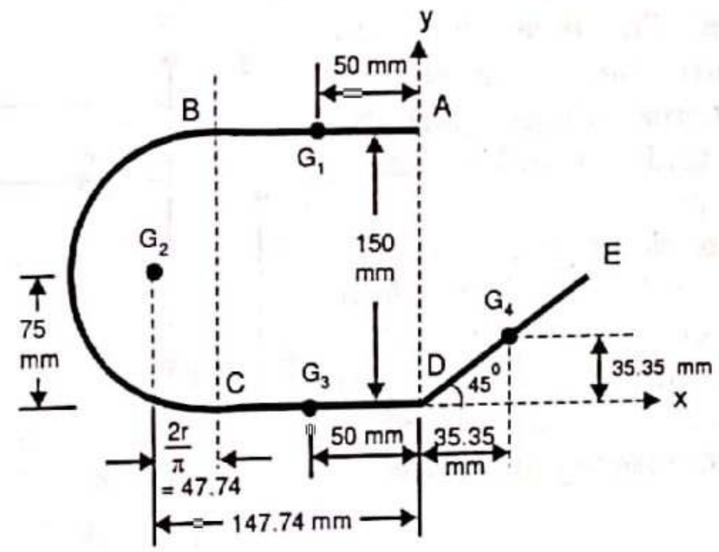

Let us mark the centroids G_1, G_2, G_3 and G_4 of the four parts on the figure. The lengths and co-ordinates of centroids of the different parts are entered in the table.

PART	LENGTH L_i, mm	Co-ordinates		$L_i.X_i$ mm²	$L_i.Y_i$ mm²
		X_i (mm)	Y_i (mm)		
AB St. horizontal	100	– 50	150	– 5000	15000
BC Semi circular arc	$\pi \times 75 = 235.62$	– 147.74	75	– 34812	17671
CD St. horizontal	100	– 50	0	– 5000	0
DE St. inclined	100	35.35	35.35	3535	3535
	$\Sigma L_i = 535.62$			$\Sigma L_i.X_i =$ – 41277	$\Sigma L_i.Y_i =$ 36206

Using $\overline{X} = \frac{\Sigma L_i X_i}{\Sigma L_i} = \frac{-41277}{535.62} = -77.06$ mm and $\overline{Y} = \frac{\Sigma L_i Y_i}{\Sigma L_i} = \frac{36206}{535.62} = 67.59$ mm

∴ the centroid of the bent up wire has co-ordinates,

$(\overline{X}, \overline{Y}) = (-77.06, 67.59)$ mm .....**Ans.**

Ex. 6.12 A thin homogeneous wire of uniform cross-section is bent into shape OABCO as shown. Find its centroid.

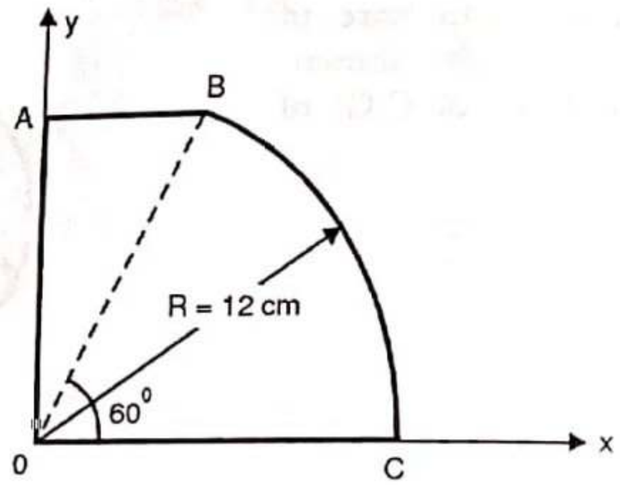

Solution: The given bent up wire can be obtained by adding three straight portions OA, AB and CO and adding a circular arc.

Let us mark the centroids G_1, G_2, G_3 and G_4 of the four parts on the figure. The lengths and co-ordinates of centroids of the different parts are entered in the table.

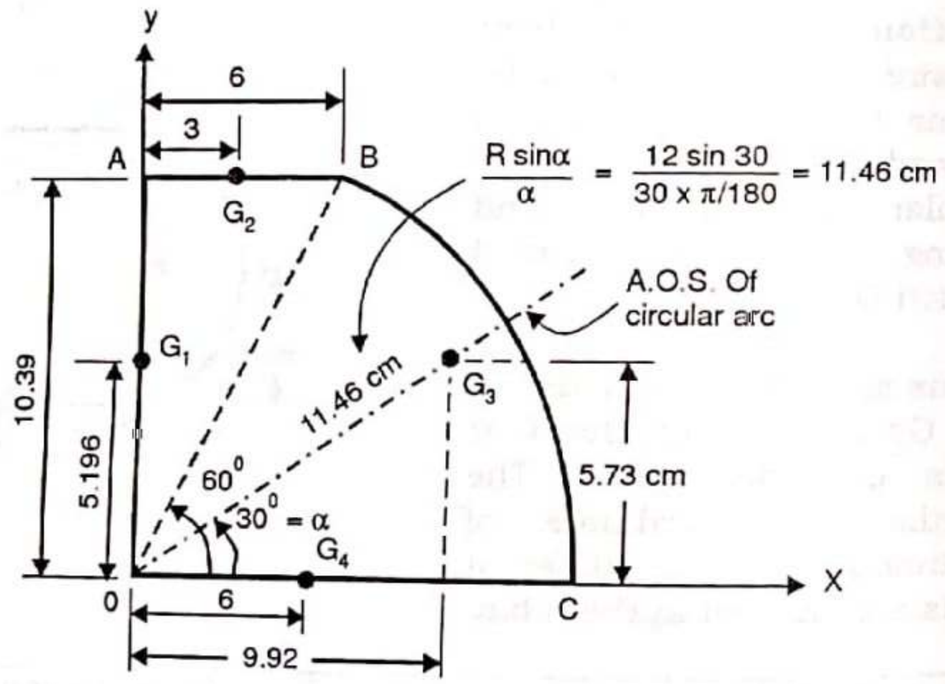

All dimensions are in cm

PART	LENGTH L_i, cm	Co-ordinates (cm)		$L_i.X_i$ cm²	$L_i.Y_i$ cm²
		X_i	Y_i		
OA St. vertical	10.39	0	5.196	0	53.98
AB St. horizontal	6	3	10.39	18	62.34
BC Circular arc	$2r\alpha = 2\times12\left[30\times\frac{\pi}{180}\right] = 12.56$	9.92	5.73	124.6	71.96
CO St. horizontal	12	6	0	72	0
	$\Sigma L_i = 40.95$			$\Sigma L_i.X_i =$ 214.6	$\Sigma L_i.Y_i =$ 188.28

Using $\overline{X} = \frac{\Sigma L_i X_i}{\Sigma L_i} = \frac{214.6}{40.95} = 5.24$ cm and $\overline{Y} = \frac{\Sigma L_i Y_i}{\Sigma L_i} = \frac{188.28}{40.95} = 4.59$ cm

∴ the co-ordinates of centroid of the bent up wire are, $(\overline{X}, \overline{Y})$ = (5.24, 4.59) cm ...**Ans.**

Ex. 6.13 A rod is bent in the shape shown. Assuming the rod to be uniform throughout, determine the length 'L', the engineer should provide so that the bent up rod remains in the position shown, when suspended from 'A'.

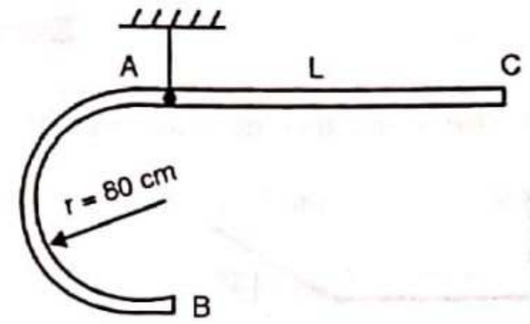

Solution: Whenever a body is suspended, the body occupies such a position, that the centre of gravity of the body lies vertically below the point of suspension.

For the bent up rod to remain in the position shown, the C.G. should lie vertically below point of suspension 'A'.

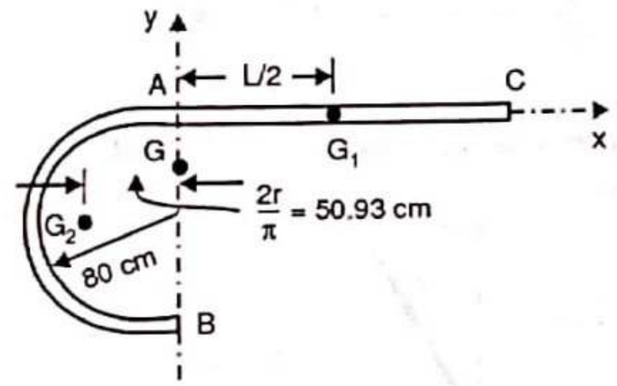

If the co-ordinate axes are chosen as shown, G should lie on the y axis i.e. $\overline{X} = 0$.

Let us divide the bent up rod into two parts – a straight horizontal portion AC and a semi-circular arc portion AB. The centroids G_1 and G_2 are marked as shown.

PART	LENGTH L_i, cm	Co-ordinates X_i (cm)	$L_i.X_i$ (cm²)
AC St. horizontal	L	L/2	$L^2/2$
AB Semi-circular Arc	πr = 251.33	– 50.93	– 12800
	ΣL_i = L + 251.33		$\Sigma L_i.X_i = L^2/2 - 12800$

Using $\overline{X} = \frac{\Sigma L_i X_i}{\Sigma L_i} = \frac{L^2/2 - 12800}{L + 251.33}$

but $\overline{X} = 0$ -------- since G lies below A on the y axis.

∴ $L^2/2 - 12800 = 0$

or $L = 160$ cm

∴ The length of the straight portion AC should be 160 cm ..... **Ans.**

Exercise 6.2

P1. Locate the centroid of the bent-up wire ABC.

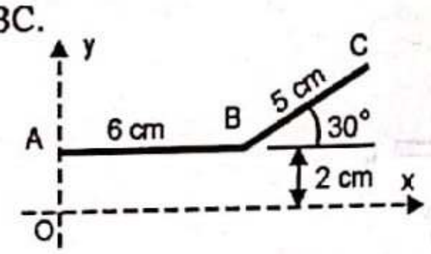

P2. Determine the centroid of the bent-up wire in terms of 'r'.

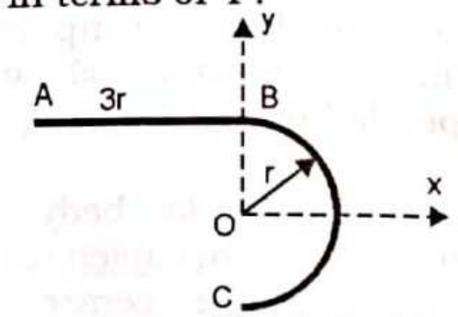

P3. Locate the centroid of the bent up wire AOB.

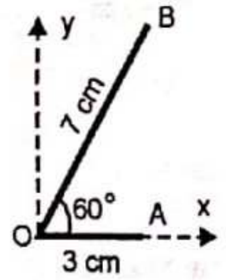

P4. Locate centroid of a thin wire as shown in figure. OA = 24 cm, OB = 10 cm and AB = 26 cm.

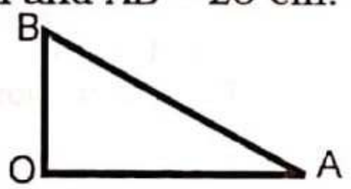

P5. Find the centroid of the bent wire shown in the figure.

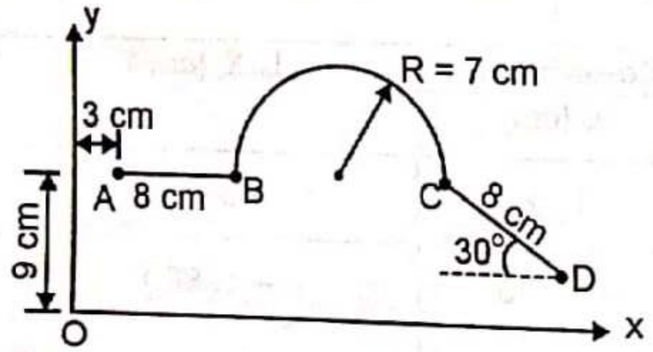

P6. A bent up wire ABCDE is as shown. Locate its centre of gravity.

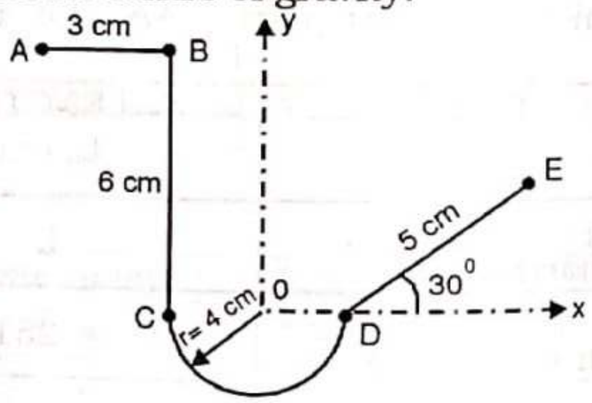

P7. A thin homogeneous wire OABO is built into a shape as shown. Determine the position of centre of gravity of the wire.

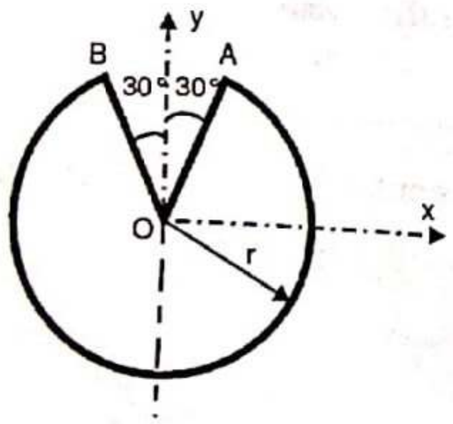

P8. Determine the centroid of the bent wire ABCDEFOA shown in figure. ***(NMIMS May 09)***

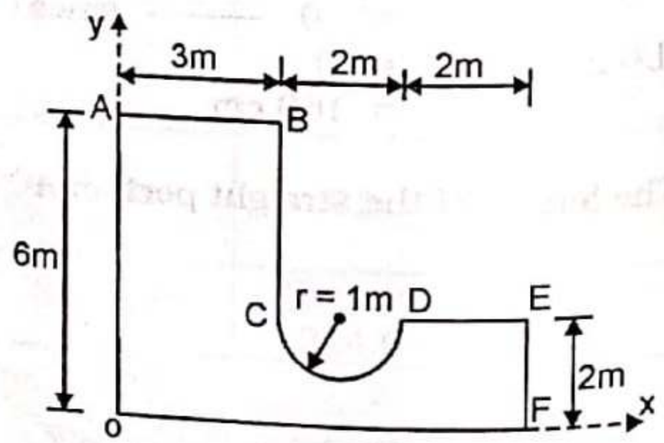

6.9 Centroids by Integration

We require the integration approach to locate the centroid of figures bounded by curves.

Figure 6.8, shows a plane area bounded by a curve defined by the equation $y = f(x)$, the x-axis and the y-axis.

To find the centroid, let us take a vertical elemental rectangular strip of a very small width 'dx'.

Let (x, y) be a point on the curve just over the elemental strip.

The height of the strip is = y

∴ area of elemental strip dA = y × dx

Let (x_{el}, y_{el}) be the co-ordinates of the centroid of the element.

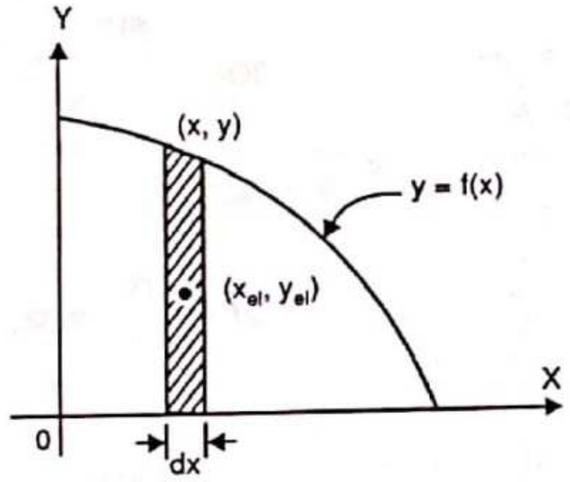

Fig. 6.8

If $\overline{X}$ and $\overline{Y}$ are the co-ordinates of centroid of the entire plane area, then

$$\overline{X} = \frac{\int x_{el}.dA}{\int dA} \quad , \quad \overline{Y} = \frac{\int y_{el}.dA}{\int dA}$$

Ex. 6.15 Determine the centroid of the plane area shown.

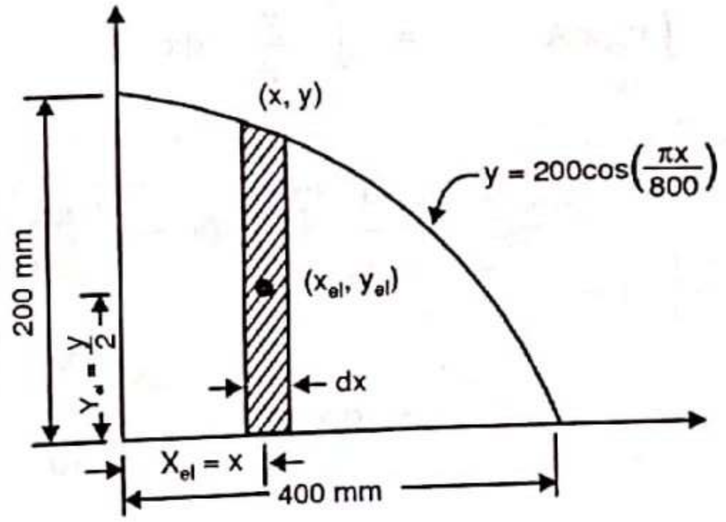

Solution: Let us take an elemental vertical strip of width 'dx'. Let (x, y) be a point on the curve just above the elemental strip,

∴ height of the strip = y

or area of the strip = dA = ydx

Total area = ∫ dA = ∫ ydx

$$= \int_0^{400} 200 \cos\left(\frac{\pi x}{800}\right) dx$$ [The limits within which dx can move is from 0 to 400 mm]

$$= 200\left(\frac{\sin\left(\frac{\pi x}{800}\right)}{\frac{\pi}{800}}\right)_0^{400} = \frac{160000}{\pi}\sin\left(\frac{\pi}{2} - \sin 0\right)$$

$$= \frac{160000}{\pi} = 50930 \text{ mm}^2$$

If (x_{el}, y_{el}) are the co-ordinates of the centroid of the element, then

$x_{el} = x$ and $y_{el} = y/2$

Now, $\int x_{el}.dA = \int_0^{400} x.\,ydx$ -------- since $x_{el} = x$ and $dA = ydx$

$$= \int_0^{400} x.\,200\cos\left(\frac{\pi x}{800}\right)dx$$

$$= 200\left[x.\frac{\sin\left(\frac{\pi x}{800}\right)}{\frac{\pi}{800}} - \int 1.\sin\frac{\left(\frac{\pi x}{800}\right)dx}{\pi/800}\right]_0^{400}$$

$$= 200\left[\frac{800}{\pi}.x.\sin\left(\frac{\pi x}{800}\right) - \frac{800}{\pi}.\left(\frac{-\cos\left(\frac{\pi x}{800}\right)dx}{\pi/800}\right)\right]_0^{400}$$

$$= 200\left\{\left(\frac{800}{\pi}.400\sin\left(\frac{\pi}{2}\right) + \frac{800^2}{\pi^2}.\cos\left(\frac{\pi}{2}\right)\right) - \left(0 + \frac{800^2}{\pi^2}\cos 0\right)\right\}$$

$$= 200[101859 - 64845.5]$$

$$= 7402721 \text{ mm}^3$$

Also, $\int y_{el}.dA = \int_0^{400} \frac{y}{2}.\,ydx$

$$= \frac{1}{2}\int_0^{400}\left(200\cos\left(\frac{\pi x}{800}\right)\right)^2 dx = 20000\int_0^{400}\frac{1+\cos\left(\frac{\pi x}{400}\right)}{2}dx$$

$$= 10000\left[x + \frac{\sin\left(\frac{\pi x}{400}\right)}{\pi/400}\right]_0^{400}$$

$$= 10000\left\{\left(400 + \frac{400}{\pi}(\sin\pi)\right) - 0\right\} = 4\times10^6 \text{ mm}^3$$

Using $\overline{X} = \frac{\int x_{el}.dA}{\int dA} = \frac{7402721}{50930} = 145.35$ mm

$\overline{Y} = \frac{\int y_{el}.dA}{\int dA} = \frac{4\times10^6}{50930} = 78.54$ mm

∴ Centroid of the plane area has co-ordinates $(\overline{X}, \overline{Y})$ = (145.35, 78.54) mm.....**Ans.**

Ex. 6.16 Show that the centroid of an arc of radius 'r' is located at $\frac{r.\sin\alpha}{\alpha}$ from the centre along axis of symmetry.

Solution: Consider a circular arc which subtends an angle 2α. Let the A.O.S. be x-axis. Let us take an element of length dL situated at an angle θ from the x-axis. Let the element subtend an angle dθ at the centre.

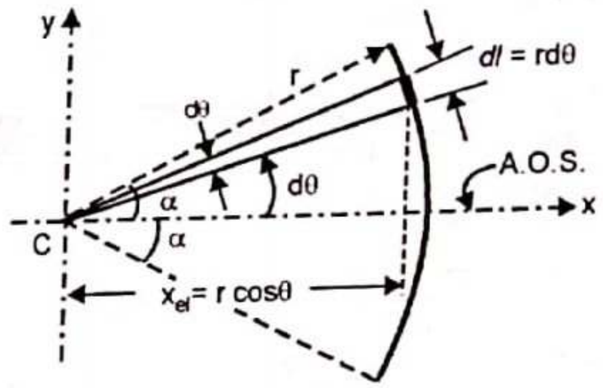

∴ $dL = rd\theta$

Total length $L = \int dL = \int_{-\alpha}^{\alpha} r\,d\theta = r[\theta]_{-\alpha}^{\alpha}$

or $\int dL = 2r\alpha$ ---------- (1)

The centroid of the element is on the element itself

∴ $x_{el} = r\cos\theta$

∴ $\int x_{el}.dL = \int_{-\alpha}^{\alpha} r\cos\theta.rd\theta = r^2[\sin\theta]_{-\alpha}^{\alpha} = 2r^2\sin\alpha$ ---------- (2)

Using $\overline{X} = \frac{\int x_{el}.dL}{\int dL} = \frac{2r^2\sin\alpha}{2r.\alpha}$ or $\boxed{\overline{X} = \frac{r\sin\alpha}{\alpha}}$ ----- Proved.

Ex. 6.17 Show that the centroid of a sector of radius 'r' is located at $\frac{2}{3}\frac{r.\sin\alpha}{\alpha}$ from the centre along axis of symmetry.

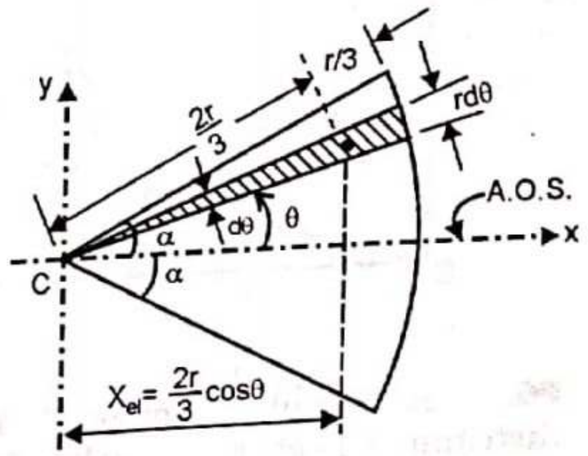

Solution: Consider a sector of radius r which subtends an angle 2α. Let the A.O.S. be the x-axis.

Consider a triangular element, which subtends a very small angle dθ at the centre.

Now base of the triangular element = rdθ

and its height = r

∴ area of the element = dA = ½ rdθ × r

∴ $dA = \frac{1}{2}r^2d\theta$

Total area $A = \int dA = \int_{-\alpha}^{\alpha}\frac{1}{2}r^2d\theta = \frac{1}{2}r^2[\theta]_{-\alpha}^{\alpha} = r^2\alpha$ ---------- (1)

The centroid of the triangular element is at one-third the height from the base of the triangle or at $\frac{2r}{3}$ form the apex 'c' ∴ $x_{el} = \frac{2r}{3}\cos\theta$

∴ $\int x_{el}.dA = \int_{-\alpha}^{\alpha}\frac{2r}{3}\cos\theta\left(\frac{1}{2}r^2\,d\theta\right) = \frac{r^3}{3}\int_{-\alpha}^{\alpha}\cos\theta.d\theta$

$= \frac{r^3}{3}[\sin\theta]_{-\alpha}^{\alpha} = \frac{2r^3}{3}\sin\alpha$ ---------- (2)

Using $\bar{X} = \dfrac{\int x_{el}.dA}{\int dA} = \dfrac{\frac{2}{3}r^3 \sin\alpha}{r^2.\alpha}$ or $\boxed{\bar{X} = \dfrac{2}{3}\dfrac{r\sin\alpha}{\alpha}}$ ---------- proved

Exercise 6.3

P1. Show that the centroid of a semi-circular lamina of radius 'r' is located at $4r/3\pi$ from its base.

P2. Determine the centroid of the plane area bounded by the curve as shown in figure.

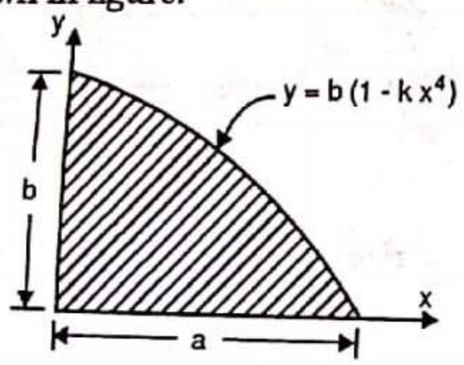

P3. Determine the centroid of the shaded plane lamina as shown.

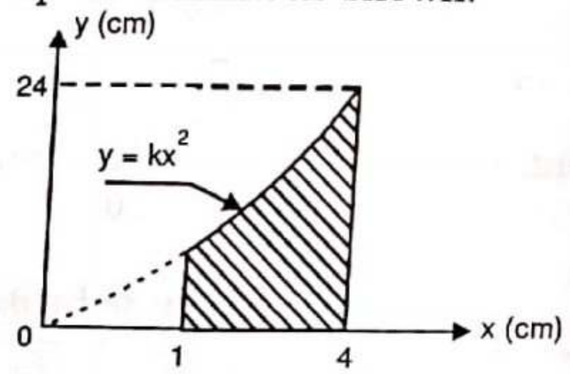

P4. Determine by direct integration method the location of centroid of prismatic spandrel shown in figure. ***(VJTI May 09, Nov 12)***

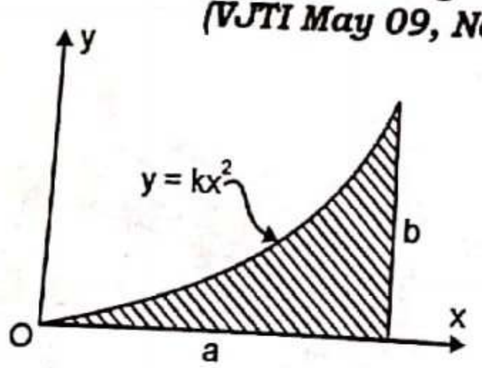

P5. Locate the centroid co-ordinates of the shaded area enclosed by a parabola and a straight line.

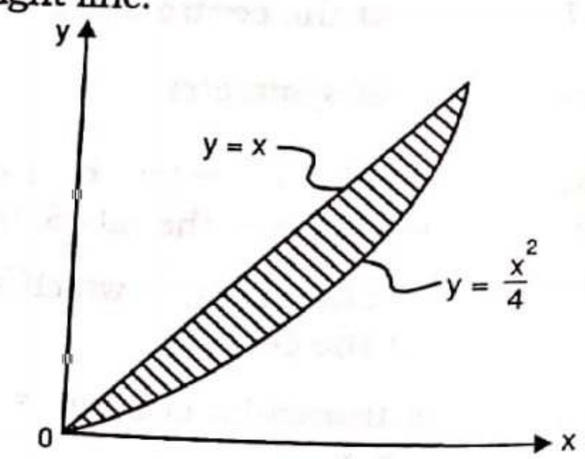

P6. A Simply supported beam AB, carrying a distributed load, has a value 'b' at end A and 'zero' at end B, varying across the span 'L' as per the relation $y = \frac{b}{L}\sqrt{L^2 - x^2}$. Determine the resultant load acting on the beam and its location from the end A.

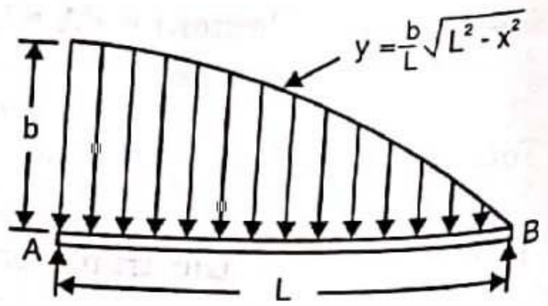

Exercise 6.4

Theory questions

Q.1. Explain the need of locating centre of gravity of bodies.

Q.2. Explain difference between centroid and center of gravity with suitable example. ***(VJTI May 09)***

★ ★ ★

Chapter 7

Space Forces

7.1 Introduction

We have so far discussed and worked with a coplanar system of forces, wherein all the forces in a system would lie in a single plane i.e. it was a two dimensional force system. In this chapter we deal with a system of forces lying in different planes forming a three dimensional force system. Such a system is also referred as a *Space Force System* and a vector approach is required to deal with these problems. The chapter begins with the study of basic operations with forces using a vector approach. Later on we will learn to find the resultant of a space force system and finally we shall deal with equilibrium problems in space forces.

7.2 Basic Operations Using Vector Approach

Since the forces have three dimensions, we employ a vector approach, which simplifies the working. Here we will learn to represent a force vectorially, to find vectorially moment of a force about a point and about a line, to find magnitude and direction of a force given in vector form and other basic operations useful in solution of a space force problem.

7.2.1 *Force in vector form.*

Fig. 7.1 shows a force of magnitude F in space passing through A (x_1, y_1, z_1) and B (x_2, y_2, z_2). The force in vector form is

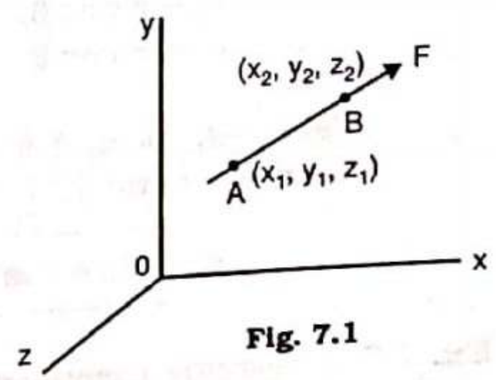

Fig. 7.1

$$\bar{F} = F.\hat{e}_{AB}$$

$$\bar{F} = F\left(\frac{(x_2 - x_1)\mathbf{i} + (y_2 - y_1)\mathbf{j} + (z_2 - z_1)\mathbf{k}}{\sqrt{(x_2 - x_1)^2 + (y_2 - y_1)^2 + (z_2 - z_1)^2}}\right)$$

$$\bar{F} = F_x\,\mathbf{i} + F_y\,\mathbf{j} + F_z\,\mathbf{k}$$

... Force in vector form

Note: **i, j** *and* **k** *printed in bold type denote unit vectors along the x, y and z axis respectively.*

If a force acts parallel to an axes, its vector form is obtained by attaching the unit vector of the axes to the force magnitude with a proper sign. If the force acts in the direction of the axes, the sign is + ve , else – ve. e.g. if a force F = 10 kN acts parallel to – ve y axis, then its vector form is $\bar{F} = -10\,\mathbf{j}$ kN.

Ex. 7.1 a) A force F_1 of magnitude 50 kN acts parallel to + ve x axis and force F_2 of magnitude 12 kN acts parallel to – ve z axis. Put these forces in vector form.
b) A force of magnitude 650 N passes from P (0, 3, 0) to Q (5, 0, 4). Put this force in vector form.

Solution: a) $\overline{F}_1 = 50\,\mathbf{i}$ kN , $\overline{F}_2 = -12\,\mathbf{k}$ kN ..... **Ans.**

b) $\overline{F} = F.\hat{e}_{PQ}$

$$= 650\left(\frac{5\,\mathbf{i} - 3\,\mathbf{j} + 4\,\mathbf{k}}{\sqrt{5^2 + 3^2 + 4^2}}\right)$$

$$\overline{F} = 459.6\,\mathbf{i} - 257.8\,\mathbf{j} + 367.7\,\mathbf{k} \text{ N}$$ ..... **Ans.**

7.2.2. Magnitude and direction of force

Fig. 7.2 shows a force $\overline{F} = F_x\,\mathbf{i} + F_y\,\mathbf{j} + F_z\,\mathbf{k}$ making angles θ_x, θ_y and θ_z with the x, y and z axis respectively.

Here F_x is the component of force in the x direction. Similarly F_y and F_z are the force components in the y and z direction.

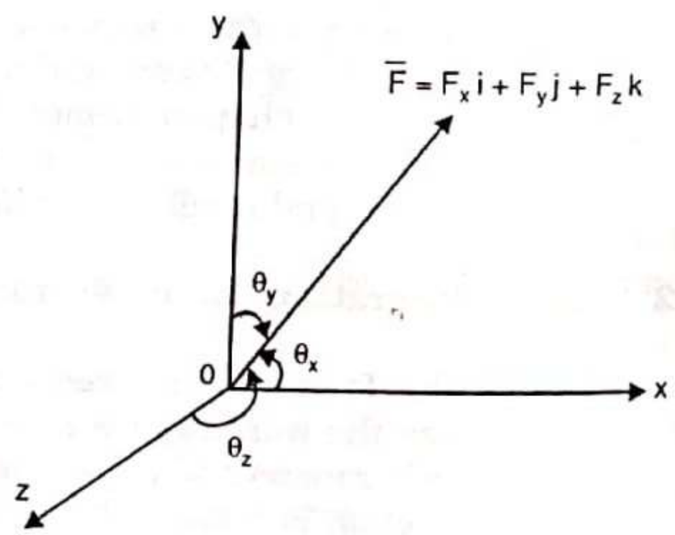

Fig. 7.2

The magnitude of the force is

$$F = \sqrt{F_x^2 + F_y^2 + F_z^2}$$

Also $F_x = F\cos\theta_x$
$F_y = F\cos\theta_y$
$F_z = F\cos\theta_z$

Here θ_x, θ_y and θ_z are known as the *force directions*, the value of which lies between 0 and 180. There is an important identity which relates them.

$$\boxed{\cos^2\theta_x + \cos^2\theta_y + \cos^2\theta_z = 1}$$

Ex. 7.2 Determine the magnitude and the directions of the force
$\overline{F} = 345\,\mathbf{i} + 150\,\mathbf{j} - 290\,\mathbf{k}$ N

Solution: Magnitude of the force

$$F = \sqrt{F_x^2 + F_y^2 + F_z^2}$$

$$F = \sqrt{345^2 + 150^2 + 290^2}$$

$$F = 475 \text{ N}$$ ..... **Ans.**

Direction of the force

$F_x = F\cos\theta_x$	$F_y = F\cos\theta_y$	$F_z = F\cos\theta_z$
$345 = 475\cos\theta_x$	$150 = 475\cos\theta_y$	$-290 = 475\cos\theta_z$
$\theta_x = 43.42°$ ... **Ans.**	$\theta_y = 71.59°$ ... **Ans.**	$\theta_z = 127.62°$ ... **Ans.**

Ex.7.3 The direction of a force is given by $\theta_x = 66°$ and $\theta_y = 140°$. If $F_z = -4$ N determine i) θ_z ii) the magnitude of force iii) the other components.

Solution: Using $\cos^2\theta_x + \cos^2\theta_y + \cos^2\theta_z = 1$

$\therefore \quad \cos^2 66 + \cos^2 140 + \cos^2\theta_z = 1$

$\cos^2\theta_z = 0.2477$

$\therefore \quad \cos\theta_z = \pm 0.4977$

$\therefore \quad \theta_z = 60.14°$ or $\theta_z = 119.85°$

Since $F_z = -4$ N it implies that the force component is directed towards the negative direction of the z axis.

$\therefore \quad \theta_z = 119.85°$ ..... **Ans.**

using $F_z = F\cos\theta_z$
$-4 = F\cos 119.85$
$\therefore \quad F = 8.036$ N ..... **Ans.**

using $F_y = F\cos\theta_y$
$= 8.036\cos 140$
$\therefore \quad F_y = 6.156$ N ..... **Ans.**

using $F_x = F\cos\theta_x$
$= 8.036\cos 66$
$\therefore \quad F_x = 3.269$ N ..... **Ans.**

7.2.3 Vector component of force

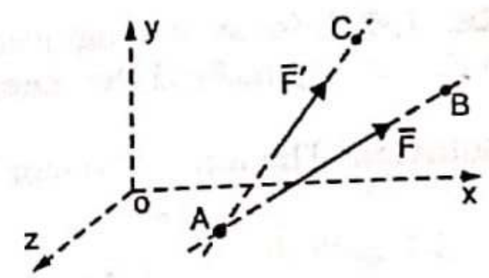

Vector component of a force along a line represents the component of the force along the line. If $\overline{F}$ is the given force, its vector component $\overline{F}'$ is found as below.

Step 1: Put the given force in vector form i.e. $\overline{F}$

Step 2: Find unit vector of the line along which the vector component is required i.e. $\hat{e}_{line}$

Step 3: Perform the dot product of the force vector and the unit vector of the line to get the magnitude of the force component i.e. $F' = \overline{F}.\,\hat{e}_{line}$

Step 4: To get the vector component, multiply the magnitude with the unit vector of the line i.e. $\overline{F}' = F'\,(\hat{e}_{line})$

7.2.4 *Moment of a force about a point*

For coplanar forces, moment about a point is the product of the force and the ⊥ distance. However for space forces the moment calculation requires a vector approach.

Fig. 7.3 shows a force F in space passing through points A (x_1, y_1, z_1) and B (x_2, y_2, z_2) on its line of action. Let C (x_3, y_3, z_3) be the moment centre i.e. the point about which we have to find the moment. The procedure of finding the moment of the force about the point is as follows.

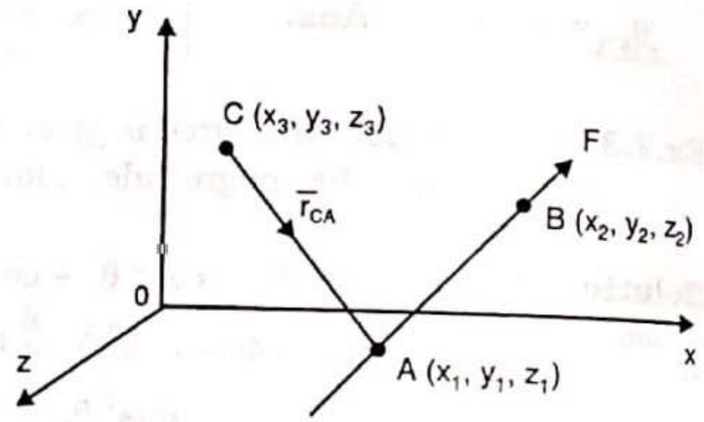

Fig. 7.3

Step 1: Put the force in vector form i.e.

$$\bar{F} = F_x\mathbf{i} + F_y\mathbf{j} + F_z\mathbf{k}$$

Step 2: Find the position vector extending from the moment centre to any point on the force i.e. $\bar{r} = r_x\mathbf{i} + r_y\mathbf{j} + r_z\mathbf{k}$

Step 3: Perform the cross product of the position vector and the force vector to get the moment vector i.e.

$$\bar{M}^F_{point} = \bar{r} \times \bar{F} = \begin{vmatrix} \mathbf{i} & \mathbf{j} & \mathbf{k} \\ r_x & r_y & r_z \\ F_x & F_y & F_z \end{vmatrix}$$

Ex. 7.4 A force of magnitude 50 kN is acting at point A (2, 3, 4) m towards point B (6, –2, –3) m. Find the moment of the given force about a point D (–1, 1, 2) m.

Solution: The force in vector form is

$$\bar{F} = F.\hat{e}_{AB} = 50\left(\frac{4\mathbf{i} - 5\mathbf{j} - 7\mathbf{k}}{\sqrt{4^2 + 5^2 + 7^2}}\right) = 21.08\,\mathbf{i} - 26.35\,\mathbf{j} - 36.89\,\mathbf{k} \quad \text{kN}$$

$$\bar{M}^F_D = \bar{r}_{DA} \times \bar{F} = \begin{vmatrix} \mathbf{i} & \mathbf{j} & \mathbf{k} \\ 3 & 2 & 2 \\ 21.08 & -26.35 & -36.89 \end{vmatrix}$$

Here $\bar{r}_{DA} = 3\,\mathbf{i} + 2\,\mathbf{j} + 2\,\mathbf{k}$ m

$$\therefore \quad \bar{M}^F_D = -21.08\,\mathbf{i} + 152.8\,\mathbf{j} - 121.2\,\mathbf{k} \quad \text{kNm}$$

..... **Ans.**

Ex. 7.5 A force of 10 kN acts at a point P (2, 3, 5) m and has its line of action passing through Q (10, -3, 4) m. Calculate moment of this force about a point S (1, – 10, 3) m. ***(MU Dec 13)***

Solution: Putting the force in vector form

$$\bar{F} = F.\hat{e}_{PQ} = 10\left(\frac{8\,\mathbf{i} - 6\,\mathbf{j} - \mathbf{k}}{\sqrt{8^2 + 6^2 + 1}}\right)$$

$$\bar{F} = 7.96\,\mathbf{i} - 5.97\,\mathbf{j} - 0.995\,\mathbf{k} \quad \text{kN}$$

Finding the moment of the force about point S (1, – 10, 3)

$$\bar{M}^F_S = \bar{r}_{SP} \times \bar{F} \quad \text{where, } \bar{r}_{SP} = \mathbf{i} + 13\,\mathbf{j} + 2\,\mathbf{k} \text{ m}$$

$$\bar{M}^F_S = \begin{vmatrix} \mathbf{i} & \mathbf{j} & \mathbf{k} \\ 1 & 13 & 2 \\ 7.96 & -5.97 & -0.995 \end{vmatrix}$$

$$\therefore \quad \bar{M}^F_S = 0.995\,\mathbf{i} - 16.92\,\mathbf{j} - 109.45\,\mathbf{k} \quad \text{kNm}$$

.....**Ans.**

Exercise 7.1

P1. A force of 50 N acts parallel to the y axis in the –ve direction. Put the force in vector form.

P2. A 130 kN force acts at B (12, 0, 0) m and passes through C (0, 3, 4) m. a) Put this force in vector form. b) Find moment of this force about a point A (5, –2, 4) m.

P3. A force F = (3 **i** – 4 **j** + 12 **k**) N acts at a point A (1, -2, 3) m. Find
a. moment of the force about origin. ***(MU May 13)***
b. moment of the force about point B (2, 1, 2) m.

P4. A force F = 80 **i** + 50 **j** – 60 **k** passes through a point A (6, 2, 6). Compute its moment about a point B (8, 1, 4) ***(MU Dec 12)***

P5. A 700 N force passes through two points A (–5,–1,4) towards B (1,2,6) m. Find moment of the force about a point C (2,–2,1) m.

P6. A force of 1200 N acts along PQ, P (4, 5, – 2)m and Q (– 3, 1, 6) m. Calculate its moment about a point A (3, 2, 0) m. ***(MU May 14)***

P7. A force of 100 N act at a point P (– 2, 3, 5) m has its line of action passing through Q (10, 3, 4) m. Calculate moment this force about origin (0, 0, 0) m. ***(MU Dec 14)***

P8. A force vector $F = (8i - 4j + 2k)N$ acts at a point A, whose co-ordinates are (4, -2, 4) m. Find i) Members of the force about the origin (ii) Moment of force about the point B (1, -5, 1) m (iii) The vector component of vector F along the line AB. ***(NMIMS May 17)***

P9. Find the direction angles for the force given by $\overline{F} = 13\,\mathbf{i} + 12\,\mathbf{j} - 6\,\mathbf{k}$ N. ***(NMIMS Dec 13)***

P10. A force acts at the origin in a direction defined by the angles $\theta_y = 65°$, $\theta_z = 40°$. Knowing that the x-component of the force is –750 N, determine,
i) the other components ii) magnitude of the force iii) the value of θ_x. ***(MU Dec 15)***

P11. A rectangular plate is supported by brackets to the wall at A and B by wire CD as shown in figure. Knowing that tension in wire is 200 N determine the moment about point A, of the force exerted by wire on point C. Given point D lies on y-z plane.
All dimensions are in mm.

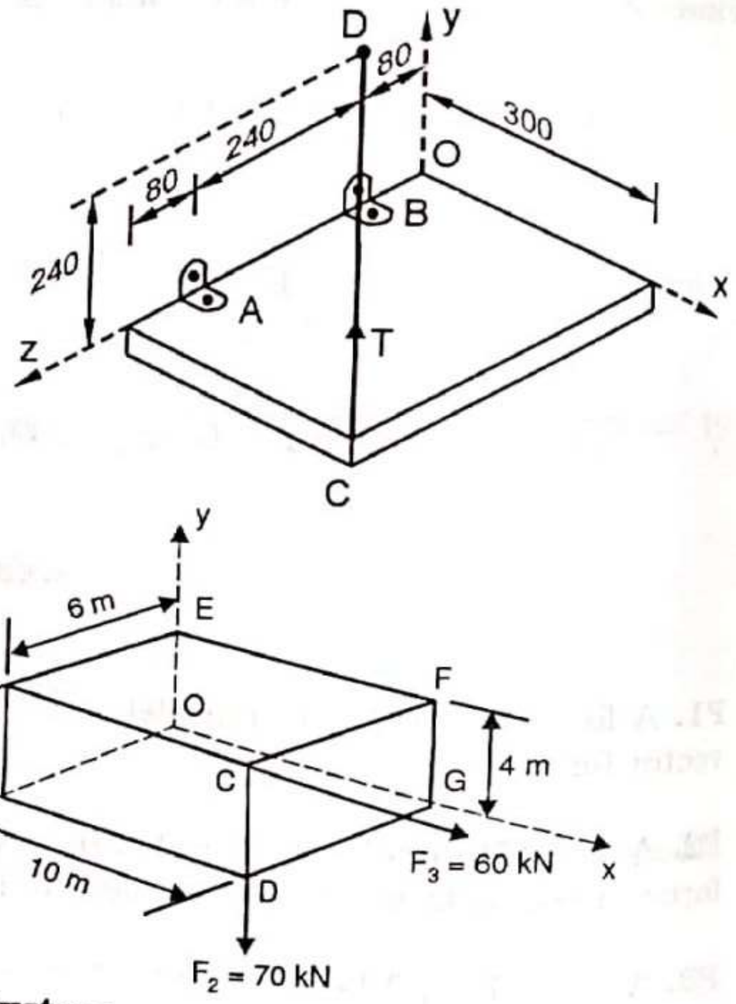

P12. Three forces act on a rectangular box as shown in figure. Determine the moment of each force about the origin.

7.3 Resultant of Concurrent Space Force System

Resultant of a concurrent space force system is a single force $\overline{R}$, which acts through the point of concurrence. Fig. 7.6 (a) shows a concurrent system at point P. The resultant of the system is shown in Fig. 7.6 (b) and calculated as,

$$\overline{R} = \overline{F}_1 + \overline{F}_2 + \overline{F}_3 + \overline{F}_4$$

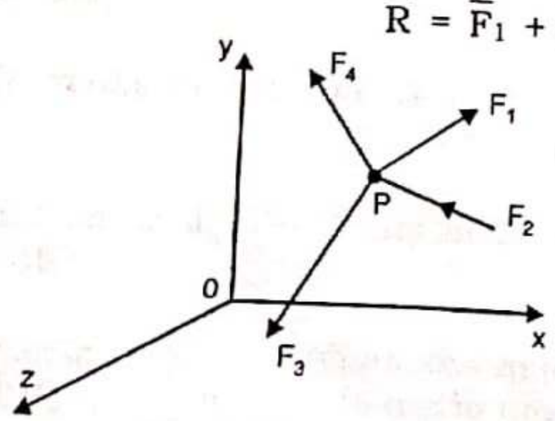

Fig. 7.6 (a)

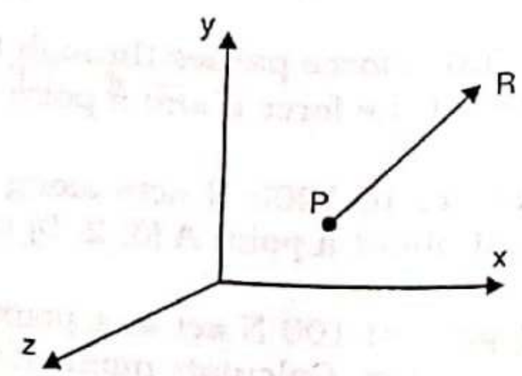

Fig. 7.6 (b)

Ex.7.6 The tower is held in place by three cables. If the force of each cable acting on the tower is shown in figure, determine the resultant. ***(MU Dec 13)***

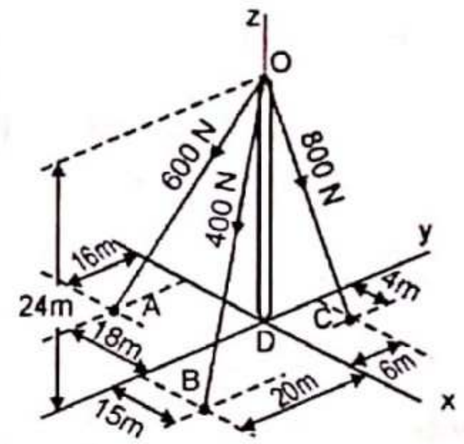

Solution: This is a concurrent space force system of 3 forces at O

Let $\overline{F}_1$ be the force in cable OA

$$\therefore \quad \overline{F}_1 = F_1.\hat{e}_{OA}$$

$$= 600\left[\frac{-18\mathbf{i} - 16\mathbf{j} - 24\mathbf{k}}{\sqrt{18^2 + 16^2 + 24^2}}\right]$$

$$= -317.6\,\mathbf{i} - 282.4\,\mathbf{j} - 423.5\,\mathbf{k} \text{ N}$$

Let $\overline{F}_2$ be the force in cable OB

$$\therefore \quad \overline{F}_2 = F_2.\hat{e}_{OB}$$

$$= 400\left[\frac{15\mathbf{i} - 20\mathbf{j} - 24\mathbf{k}}{\sqrt{15^2 + 20^2 + 24^2}}\right]$$

$$= +173.1\,\mathbf{i} - 230.8\,\mathbf{j} - 277\,\mathbf{k} \text{ N}$$

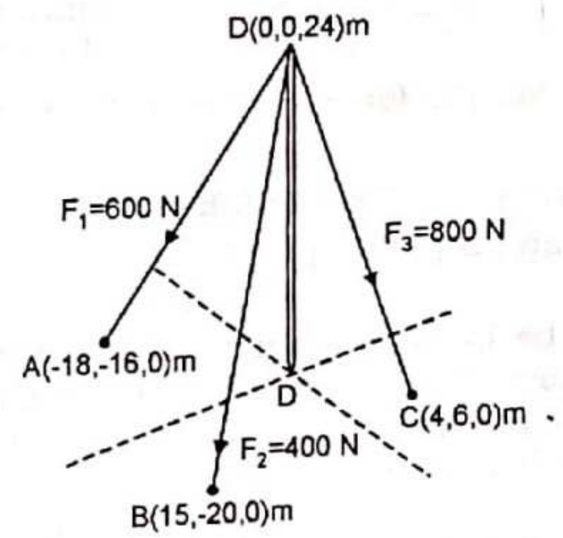

Let $\overline{F}_3$ be the force in cable OC

$$\therefore \quad \overline{F}_3 = F_3.\hat{e}_{OC}$$

$$= 800\left[\frac{4\mathbf{i} + 6\mathbf{j} - 24\mathbf{k}}{\sqrt{4^2 + 6^2 + 24^2}}\right]$$

$$= 127.7\,\mathbf{i} + 191.5\,\mathbf{j} - 766.2\,\mathbf{k} \text{ N}$$

Resultant force $\overline{R} = \overline{F}_1 + \overline{F}_2 + \overline{F}_3$

$$\therefore \quad \overline{R} = -16.8\,\mathbf{i} - 321.7\,\mathbf{j} - 1466.7\,\mathbf{k} \text{ N}$$ ..... **Ans.**

Ex. 7.7 Three forces P, Q and T act at point B. Find the resultant of these forces.

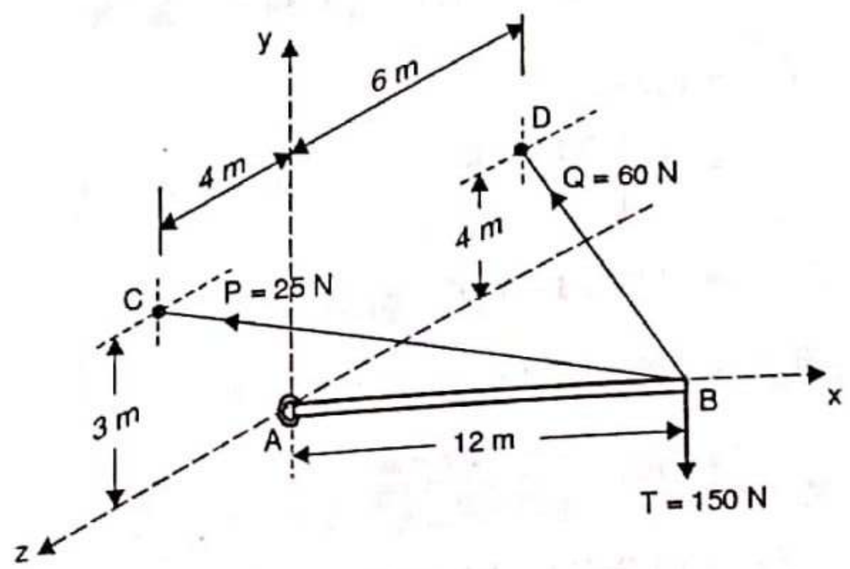

Solution: The co-ordinates are found out, B (12, 0, 0), C (0, 3, 4) and D (0, 4, -6).
The given system is a concurrent space force system of three forces. Putting the forces in vector form.

$\overline{P} = P.\hat{e}_{BC}$

$= 25\left(\dfrac{-12\,\mathbf{i}+3\,\mathbf{j}+4\,\mathbf{k}}{\sqrt{12^2+3^2+4^2}}\right)$

$= -23.07\,\mathbf{i}+5.77\,\mathbf{j}+7.69\,\mathbf{k}$ N

$\overline{Q} = Q\,.\,\hat{e}_{BD}$

$= 60\left(\dfrac{-12\,\mathbf{i}+4\,\mathbf{j}+6\,\mathbf{k}}{\sqrt{12^2+4^2+6^2}}\right)$

$= -51.42\,\mathbf{i}+17.14\,\mathbf{j}-25.71\,\mathbf{k}$ N

$\overline{T} = -150\,\mathbf{j}$ N ..... since it is parallel to the y axis and is directed in the – ve direction.

Now the resultant force $\overline{R} = \overline{P}+\overline{Q}+\overline{T}$

$\overline{R} = (-23.07\,\mathbf{i}+5.77\,\mathbf{j}+7.69\,\mathbf{k}) + (-51.42\,\mathbf{i}+17.14\,\mathbf{j}-25.71\,\mathbf{k}) + (-150\,\mathbf{j})$

$\overline{R} = -74.49\,\mathbf{i}-127.09\,\mathbf{j}-18.02\,\mathbf{k}$ N ..... **Ans.**

Ex. 7.8 The lines of actions of three forces concurrent at origin O pass respectively through point A (– 1, 2, 4), B (3, 0 – 3), C (2, – 2, 4). Force F_1 = 40 N passes through A, F_2 = 10 N passes through B, F_3 = 30 N passes through C. Find the magnitude and direction of their resultant. ***(MU May 14)***

Solution: The given system is a concurrent space force system of three forces.

Putting the forces in vector form.

$\overline{F}_1 = F_1.\hat{e}_{OA}$

$= 40\left(\dfrac{-\mathbf{i}+2\,\mathbf{j}+4\,\mathbf{k}}{\sqrt{1^2+2^2+4^2}}\right)$

$= -8.729\,\mathbf{i}+17.457\,\mathbf{j}+34.915\,\mathbf{k}$ N

$\overline{F}_2 = F_2.\hat{e}_{OB}$

$= 10\left(\dfrac{3\,\mathbf{i}-3\,\mathbf{k}}{\sqrt{3^2+3^2}}\right)$

$= 7.071\,\mathbf{i}-7.071\,\mathbf{k}$ N

$\overline{F}_3 = F_3.\hat{e}_{OC}$

$= 30\left(\dfrac{2\,\mathbf{i}-2\,\mathbf{j}+4\,\mathbf{k}}{\sqrt{2^2+2^2+4^2}}\right)$

$\overline{F}_3 = 12.247\,\mathbf{i}-12.247\,\mathbf{j}+24.495\,\mathbf{k}$ N

The resultant force $\overline{R} = \overline{F}_1+\overline{F}_2+\overline{F}_3$

$\overline{R} = (-8.729\,\mathbf{i}+17.457\,\mathbf{j}+34.915\,\mathbf{k}) + (7.071\,\mathbf{i}-7.071\,\mathbf{k})$
$+ (12.247\,\mathbf{i}-12.247\,\mathbf{j}+24.495\,\mathbf{k})$

$\therefore\ \overline{R} = 10.589\,\mathbf{i}+5.27\,\mathbf{j}+52.339\,\mathbf{k}$ N

Magnitude of the resultant $R = \sqrt{R_x^2+R_y^2+R_z^2} = \sqrt{10.589^2+5.27^2+52.339^2}$

$= 53.66$ N ..... **Ans.**

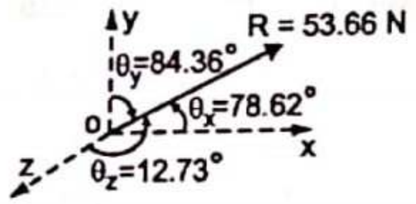

Direction of the resultant force is given by the angles θ_x, θ_y and θ_z the resultant force makes with the + ve x, y and z axes respectively.

$R_x = R\cos\theta_x$
$10.589 = 53.66\cos\theta_x$
Or $\theta_x = 78.62°$ ..... **Ans.**

$R_y = R\cos\theta_y$
$5.27 = 53.66\cos\theta_y$
Or $\theta_y = 84.36°$ ..... **Ans.**

$R_z = R\cos\theta_z$
$52.339 = 53.66\cos\theta_z$
Or $\theta_z = 12.73°$ ..... **Ans.**

Ex. 7.9 The resultant of the three concurrent space forces at A is $\overline{R} = -788\,\mathbf{j}$ N. Find the magnitude of F_1, F_2 and F_3 force. ***(MU Dec 16)***

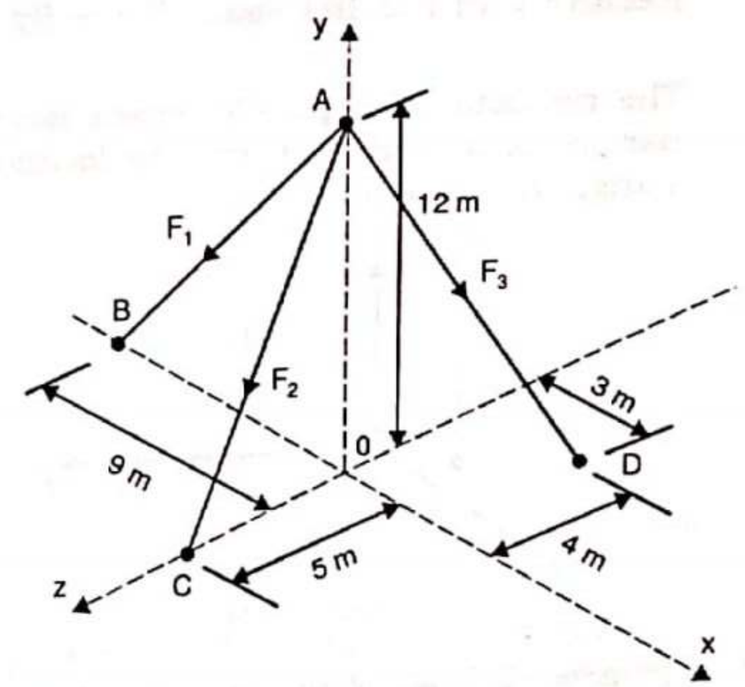

Solution: This is a concurrent space force system of three forces. To put the forces in vector form, we need the coordinates of the points through which the forces pass.

From the figure the coordinates are, A (0, 12, 0) m, B (– 9, 0, 0) m, C (0, 0, 5) m and D (3, 0, – 4) m.

Putting the forces in vector form.

$\overline{F}_1 = F_1.\hat{e}_{AB}$

$= F_1\left(\dfrac{-9\,\mathbf{i}-12\,\mathbf{j}}{\sqrt{9^2+12^2}}\right)$

$= F_1(-0.6\,\mathbf{i}-0.8\,\mathbf{j})$ N

$\overline{F}_2 = F_2.\hat{e}_{AC}$

$= F_2\left(\dfrac{-12\,\mathbf{j}+5\,\mathbf{k}}{\sqrt{12^2+5^2}}\right)$

$= F_2(-0.923\,\mathbf{j}+0.385\,\mathbf{k})$ N

$\overline{F}_3 = F_3.\hat{e}_{AD} = F_3\left(\dfrac{3\,\mathbf{i}-12\,\mathbf{j}-4\,\mathbf{k}}{\sqrt{3^2+12^2+4^2}}\right)$ $\therefore$ $\overline{F}_3 = F_3(0.231\,\mathbf{i}-0.923\,\mathbf{j}-0.308\,\mathbf{k})$ N

The resultant of the forces at A is $\overline{R} = -788\,\mathbf{j}$ N

$$\overline{R} = \overline{F}_1 + \overline{F}_2 + \overline{F}_3$$

$$0\,\mathbf{i} - 788\,\mathbf{j} + 0\,\mathbf{k} = F_1(-0.6\,\mathbf{i} - 0.8\,\mathbf{j}) + F_2(-0.923\,\mathbf{j} + 0.385\,\mathbf{k}) + F_3(0.231\,\mathbf{i} - 0.923\,\mathbf{j} - 0.308\,\mathbf{k})$$

$$0\,\mathbf{i} - 788\,\mathbf{j} + 0\,\mathbf{k} = (-0.6\,F_1 + 0.231\,F_3)\,\mathbf{i} + (-0.8\,F_1 - 0.923\,F_2 - 0.923\,F_3)\,\mathbf{j} + (0.385\,F_2 - 0.308\,F_3)\,\mathbf{k}$$

Equating the coefficients

$-0.6\,F_1 + 0.231\,F_3 = 0$ ..... (1)

$-0.8\,F_1 - 0.923\,F_2 - 0.923\,F_3 = -788$ ..... (2)

$0.385\,F_2 - 0.308\,F_3 = 0$ ..... (3)

Solving equations (1), (2) and (3) we get,

$F_1 = 154$ N, $F_2 = 320$ N, $F_3 = 400$ N ..... **Ans.**

7.4 Resultant of Parallel Space Force System

The resultant of a parallel space force system is a single force $\overline{R}$ which acts parallel to the force system. The location of the resultant can be found out using Varignon's theorem.

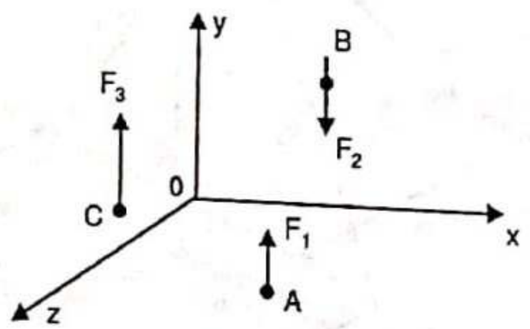

Fig. 7.7 (a)

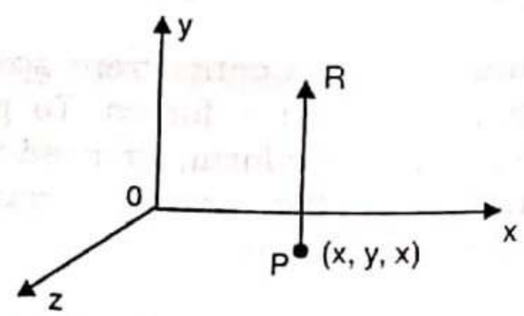

Fig. 7.7 (b)

Figure 15.7 (a) shows a parallel system of three forces F_1, F_2 and F_3. The resultant of the system is shown in figure 15.7 (b) and is calculated as,

$$\overline{R} = \overline{F}_1 + \overline{F}_2 + \overline{F}_3$$

The resultant acts at P. The coordinates (x, y, z) of the point P can be calculated by using Varignon's theorem, the moments for which can be taken about any convenient point like point O. The equation of Varignon's theorem for space forces is $\Sigma \overline{M}_O^F = \overline{M}_O^R$

Ex.7.10 A square foundation mat supports the four columns as shown. Determine the magnitude and point of application of the resultant of the four loads.

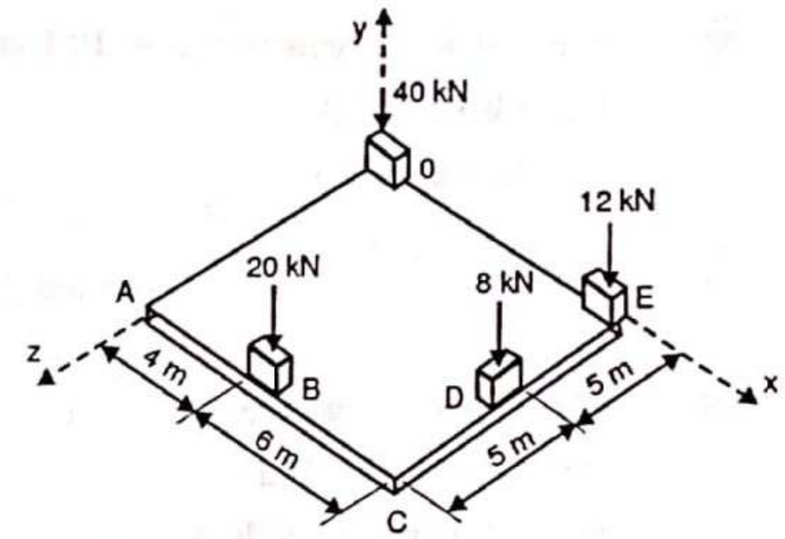

Solution: The given system is a parallel force system of four forces. The co-ordinates through which the forces act are,

O (0, 0, 0), B (4, 0, 10), D (10, 0, 5), E (10, 0, 0)

Putting the forces in vector form

Let $F_1 = 20$ kN

$\therefore$ $\overline{F}_1 = -20\,\mathbf{j}$ kN since it is parallel to y axis and directed downwards.

Similarly

Let $F_2 = 8$ kN

$\therefore$ $\overline{F}_2 = -8\,\mathbf{j}$ kN

Let $F_3 = 12$ kN

$\therefore$ $\overline{F}_3 = -12\,\mathbf{j}$ kN

Let $F_4 = 40$ kN

$\therefore$ $\overline{F}_4 = -40\,\mathbf{j}$ kN

The resultant $\overline{R} = \overline{F}_1 + \overline{F}_2 + \overline{F}_3 + \overline{F}_4$

$$\overline{R} = (-20\,\mathbf{j}) + (-8\,\mathbf{j}) + (-12\,\mathbf{j}) + (-40\,\mathbf{j})$$

$\therefore$ $\overline{R} = -80\,\mathbf{j}$ kN ..... **Ans.**

Point of application of the resultant:

Let the resultant act at a point P (x, 0, z) in the plane of the foundation mat. To use Varignon's theorem, we need to find the moments of all the forces and also of the resultant about point O.

$\overline{M}_O^{F_1} = \overline{r}_{OB} \times \overline{F}_1$ where $\overline{r}_{OB} = 4\,\mathbf{i} + 10\,\mathbf{k}$ m

$= (4\,\mathbf{i} + 10\,\mathbf{k}) \times (-20\,\mathbf{j})$

$= 200\,\mathbf{i} - 80\,\mathbf{k}$ kNm

$\overline{M}_O^{F_2} = \overline{r}_{OD} \times \overline{F}_2$ where $\overline{r}_{OD} = 10\,\mathbf{i} + 5\,\mathbf{k}$

$= (10\,\mathbf{i} + 5\,\mathbf{k}) \times (-8\,\mathbf{j})$

$= 40\,\mathbf{i} - 80\,\mathbf{k}$ kNm

$\overline{M}_O^{F_3} = \bar{r}_{OE} \times \overline{F}_3$ where $\bar{r}_{OE} = 10\,\mathbf{i}$ m

$= (10\,\mathbf{i}) \times (-12\,\mathbf{j})$

$= -120\,\mathbf{k}$ kNm

$\overline{M}_O^{F_4} = 0$ ---------- since F_4 passes through O

$\overline{M}_O^{R} = \bar{r}_{OP} \times \overline{R}$ where $\bar{r}_{OP} = x\,\mathbf{i} + z\,\mathbf{k}$

$= (x\,\mathbf{i} + z\,\mathbf{k}) \times (-80\,\mathbf{j})$

$= (80\,z)\,\mathbf{i} + (-80\,x)\,\mathbf{k}$ kNm

Using Varignon's theorem

$\Sigma\, \overline{M}_O^{F} = \Sigma\, \overline{M}_O^{R}$

$\overline{M}_O^{F_1} + \overline{M}_O^{F_2} + \overline{M}_O^{F_3} + \overline{M}_O^{F_4} = \overline{M}_O^{R}$

$(200\,\mathbf{i} - 80\,\mathbf{k}) + (40\,\mathbf{i} - 80\,\mathbf{k}) + (-120\,\mathbf{k}) = (80\,z)\,\mathbf{i} + (-80x)\,\mathbf{k}$

$\therefore \quad 240\,\mathbf{i} - 280\,\mathbf{k} = (80\,z)\,\mathbf{i} + (-80\,x)\,\mathbf{k}$

equating the coefficients

$240 = 80\,z$

$z = 3$ m

$-280 = -80\,x$

$x = 3.5$ m

$\therefore$ The resultant $\overline{R} = -80\,\mathbf{j}$ kN passes through point P (3.5, 0, 3) m ..... **Ans.**

Ex. 7.11 A square foundation is acted upon by four column loads. The resultant of the loads acts at the centre of the foundation. Find the magnitude of forces F_2 and F_4. All the forces point in the –ve z direction.

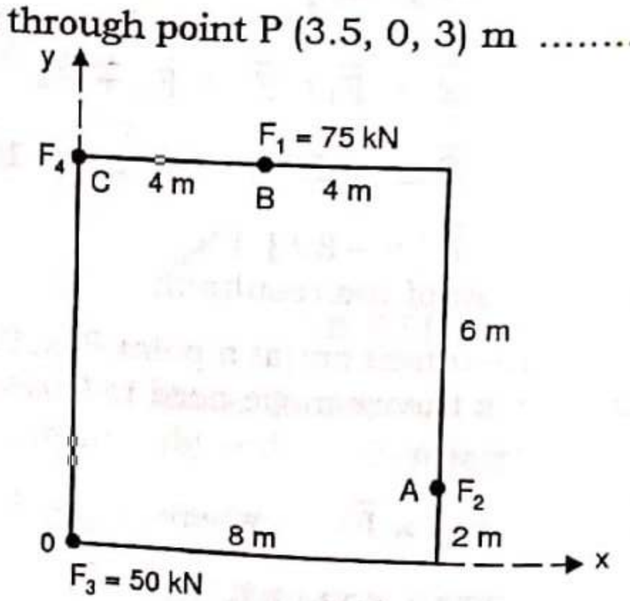

Solution: The given system is a parallel force system of four forces. The co-ordinates through which the forces act are,
O (0, 0, 0), A (8, 2, 0), B (4, 8, 0), E (0, 8, 0)

Putting the forces in vector form

$\overline{F}_1 = -75\,\mathbf{k}$ kN

$\overline{F}_2 = -F_2\,\mathbf{k}$ kN

$\overline{F}_3 = -50\,\mathbf{k}$ kN

$\overline{F}_4 = -F_4\,\mathbf{k}$ kN

Let $\overline{R}$ be the resultant of the four forces.

It is given $\overline{R}$ acts at the centre G.

$\therefore \quad G = (4, 4, 0)$

Let us use Varignon's theorem to find the unknown forces F_2 and F_4. For this we need to find the moments of all the forces about any convenient point. Let us take G as the moment centre.

$\overline{M}_G^{F_1} = \bar{r}_{GB} \times \overline{F}_1$ where $\bar{r}_{GB} = 4\,\mathbf{j}$ m

$= (4\,\mathbf{j}) \times (-75\,\mathbf{k})$

$= -300\,\mathbf{i}$ kNm

$\overline{M}_G^{F_2} = \bar{r}_{GA} \times \overline{F}_2$ where $\bar{r}_{GA} = 4\,\mathbf{i} - 2\,\mathbf{j}$ m

$= (4\,\mathbf{i} - 2\,\mathbf{j}) \times (-F_2\,\mathbf{k})$

$= 4\,F_2\,\mathbf{j} + 2\,F_2\,\mathbf{i}$ kNm

$\overline{M}_G^{F_3} = \bar{r}_{GO} \times \overline{F}_3$ where $\bar{r}_{GO} = -4\,\mathbf{i} - 4\,\mathbf{j}$ m

$= (-4\,\mathbf{i} - 4\,\mathbf{j}) \times (-50\,\mathbf{k})$

$= -200\,\mathbf{j} + 200\,\mathbf{i}$ kNm

$\overline{M}_G^{F_4} = \bar{r}_{GC} \times \overline{F}_4$ where $\bar{r}_{GC} = -4\,\mathbf{i} + 4\,\mathbf{j}$ m

$= (-4\,\mathbf{i} + 4\,\mathbf{j}) \times (-F_4\,\mathbf{k})$

$= -4\,F_4\,\mathbf{j} - 4\,F_4\,\mathbf{i}$ kNm

Since resultant $\overline{R}$ passes through G, $\overline{M}_G^{R} = 0$

Using Varignon's theorem

$\Sigma\, \overline{M}_G^{F} = \overline{M}_G^{R}$

$(-300\,\mathbf{i}) + (4\,F_2\,\mathbf{j} + 2\,F_2\,\mathbf{i}) + (-200\,\mathbf{j} + 200\,\mathbf{i}) + (-4\,F_4\,\mathbf{j} - 4\,F_4\,\mathbf{i}) = 0$

$(2\,F_2 - 4\,F_4 - 100)\,\mathbf{i} + (4\,F_2 - 4\,F_4 - 200)\,\mathbf{j} = 0$

i.e. $2\,F_2 - 4\,F_4 - 100 = 0$ ..... (1)

$4\,F_2 - 4\,F_4 - 200 = 0$ ..... (2)

Solving equations (1) and (2) we get

$F_2 = 50$ kN and $F_4 = 0$ ..... **Ans.**

Ex. 7.12 Three forces 20 kN, 30 kN and 40 kN act normal to x-y plane as shown in figure. Find the magnitude, direction and point of application of resultant force.

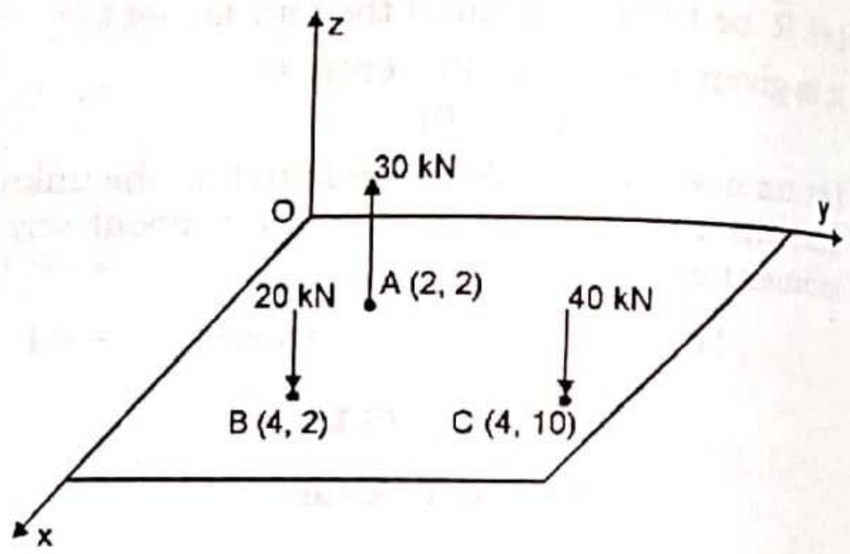

Solution: The given system is a parallel space force system of 3 forces. Putting the forces in vector form.

Let $F_1 = 30kN$

$\therefore$ $\overline{F}_1 = 30k$ kN since it parallel to z axis and directed upwards.

Similarly

Let $F_2 = 20kN$ $\therefore$ $\overline{F}_2 = -20k$ kN

Let $F_3 = 40kN$ $\therefore$ $\overline{F}_3 = -40k$ kN

The resultant $\overline{R} = \overline{F}_1 + \overline{F}_2 + \overline{F}_3$

$= 30k + (-20k) + (-40k)$

$\therefore$ $\overline{R} = -30k$ kN ..... **Ans.**

Point of application of the resultant

Let the resultant force R, acts at a point P (x, y, 0) in the x-y plane. To use Varignon's theorem, we need to first find moments of all the forces and also of the resultant about point O.

$\overline{M}_o^{F_1} = \overline{r}_{OA} \times \overline{F}_1$ where $\overline{r}_{OA} = 2\mathbf{i} + 2\mathbf{j}$ m

$= (2\mathbf{i} + 2\mathbf{j}) \times (30\mathbf{k})$

$= 60\mathbf{i} - 60\mathbf{j}$ kNm

$\overline{M}_o^{F_2} = \overline{r}_{OB} \times \overline{F}_2$ where $\overline{r}_{OB} = 4\mathbf{i} + 2\mathbf{j}$ m

$= (4\mathbf{i} + 2\mathbf{j}) \times (-20\mathbf{k})$

$= -40\mathbf{i} + 80\mathbf{j}$ kNm

$\overline{M}_o^{F_3} = \overline{r}_{OC} \times \overline{F}_3$ where $\overline{r}_{OC} = 4\mathbf{i} + 10\mathbf{j}$ m

$= (4\mathbf{i} + 10\mathbf{j}) \times (-40\mathbf{k})$

$= -400\mathbf{i} + 160\mathbf{j}$ kNm

$\overline{M}_o^{R} = \overline{r}_{OP} \times \overline{R}$ where $\overline{r}_{OP} = x\mathbf{i} + y\mathbf{j}$ m

$= (x\mathbf{i} + y\mathbf{j}) \times (-30\mathbf{k})$

$= -(30y)\mathbf{i} + (30x)\mathbf{j}$ kNm

Using Varignon's theorem

$\overline{M}_o^{F} = \overline{M}_o^{R}$

$\overline{M}_o^{F_1} + \overline{M}_o^{F_2} + \overline{M}_o^{F_3} = \overline{M}_o^{R}$

$(60\,\mathbf{i} - 60\,\mathbf{j}) + (-40\,\mathbf{i} + 80\,\mathbf{j}) + (-400\,\mathbf{i} + 160\,\mathbf{j}) = (-30\,y)\,\mathbf{i} + (30\,x)\,\mathbf{j}$

$\therefore$ $-380\,\mathbf{i} + 180\,\mathbf{j} = (-30\,y)\,\mathbf{i} + (30\,x)\,\mathbf{j}$

Equating the coefficients

$-380 = -30\,y$ $\therefore$ $y = 12.67$ m

$180 = 30\,y$ $\therefore$ $x = 6$ m

$\therefore$ The resultant $\overline{R} = -30k$ kN passes through point P (6, 12.67, 0) m in the x-y plane ..... **Ans.**

7.5 Resultant of General Space Force system

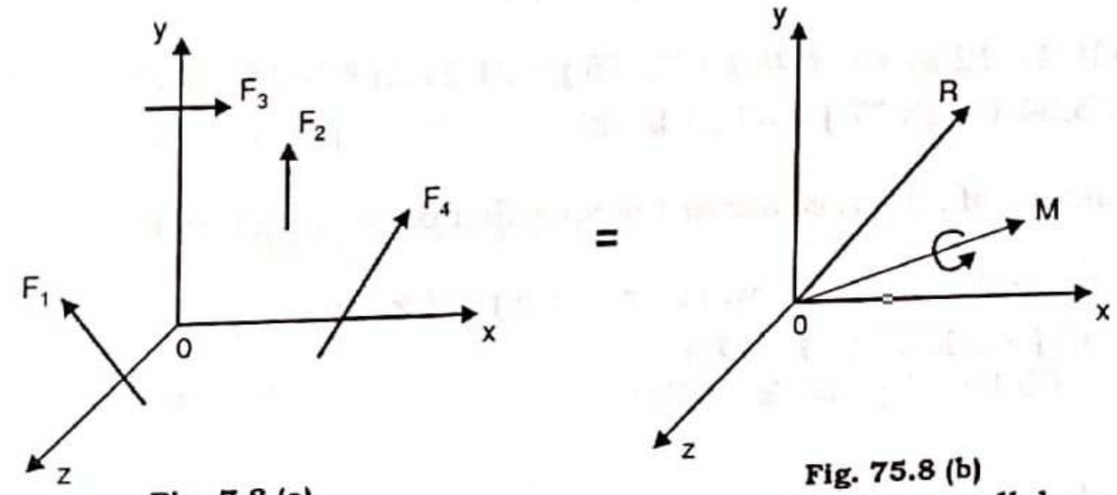

Fig. 7.8 (a) Fig. 75.8 (b)

A general space force system is neither a concurrent nor a parallel system. The resultant of such a system is a single force R and a moment M at any desired point. Since the resultant contains one force and one moment, it is also known as a *Force Couple System*. Fig.7.8 (a) shows a general system of four forces F_1, F_2, F_3 and F_4. If it is desired to have the resultant at point O, then as per figure 7.8 (b)

the single force $\overline{R} = \overline{F}_1 + \overline{F}_2 + \overline{F}_3 + \overline{F}_4$

and the single moment $\overline{M} = \overline{M}_O^{F_1} + \overline{M}_O^{F_2} + \overline{M}_O^{F_3} + \overline{M}_O^{F_4}$

Ex. 7.13 Determine the resultant force and couple moment about the origin of the force system shown in figure.
L (OA) = 4 m, L (OC) = 5 m, L(OE) = 3 m

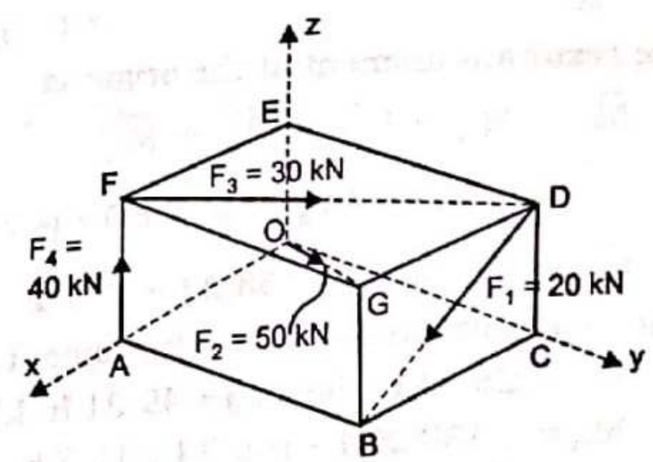

Solution: The given system is a general system of four forces. The co-ordinates of the various points through which the force passes are, A (4, 0, 0), B (4, 5, 0), C (0, 5, 0), D (0, 5, 3), F (4, 0, 3), G (4, 5, 3) and O (0, 0, 0).

Putting the forces in vector form

$$\bar{F}_1 = F_1.\hat{e}_{DB} = 20\left(\frac{4\mathbf{i}-3\mathbf{k}}{\sqrt{4^2+3^2}}\right) = 16\,\mathbf{i} - 12\,\mathbf{k} \text{ kN}$$

$$\bar{F}_2 = F_2.\hat{e}_{OG} = 50\left(\frac{4\mathbf{i}+5\mathbf{j}+3\mathbf{k}}{\sqrt{4^2+5^2+3^2}}\right) = 28.28\,\mathbf{i} + 35.35\,\mathbf{j} + 21.21\,\mathbf{k} \text{ kN}$$

$$\bar{F}_3 = F_3.\hat{e}_{FD} = 30\left(\frac{-4\mathbf{i}+5\mathbf{j}}{\sqrt{4^2+5^2}}\right) \quad \therefore \quad \bar{F}_3 = -18.74\,\mathbf{i} + 23.42\,\mathbf{j} \text{ kN}$$

$\bar{F}_4 = 40\,\mathbf{k}$ kN since the force is parallel to z axis.

The resultant force $\bar{R} = \bar{F}_1 + \bar{F}_2 + \bar{F}_3 + \bar{F}_4$

$$\bar{R} = (16\,\mathbf{i} - 12\,\mathbf{k}) + (28.28\,\mathbf{i} + 35.35\,\mathbf{j} + 21.21\,\mathbf{k}) + (-18.74\,\mathbf{i} + 23.42\,\mathbf{j}) + (40\,\mathbf{k})$$

$$\therefore \bar{R} = 25.54\,\mathbf{i} + 58.77\,\mathbf{j} + 49.21\,\mathbf{k} \text{ kN}$$ .....**Ans.**

Taking moment of all forces about the specified point, which is the origin.

$$\bar{M}_O^{F_1} = \bar{r}_{OD} \times \bar{F}_1 \quad \text{where } \bar{r}_{OD} = 5\,\mathbf{j} + 3\,\mathbf{k} \text{ m}$$
$$= (5\,\mathbf{j} + 3\,\mathbf{k}) \times (16\,\mathbf{i} - 12\,\mathbf{k})$$
$$= -60\,\mathbf{i} + 48\,\mathbf{j} - 80\,\mathbf{k} \text{ kNm}$$

$$\bar{M}_O^{F_2} = 0 \quad \text{since } F_2 \text{ passes through O}$$

$$\bar{M}_O^{F_3} = \bar{r}_{OD} \times \bar{F}_3 \quad \text{where } \bar{r}_{OD} = 5\,\mathbf{j} + 3\,\mathbf{k} \text{ m}$$
$$= (5\,\mathbf{j} + 3\,\mathbf{k}) \times (-18.74\,\mathbf{i} + 23.42\,\mathbf{j})$$
$$= -70.26\,\mathbf{i} - 56.22\,\mathbf{j} + 93.7\,\mathbf{k} \text{ kNm}$$

$$\bar{M}_O^{F_4} = \bar{r}_{OA} \times \bar{F}_4 \quad \text{where } \bar{r}_{OA} = 4\,\mathbf{i} \text{ m}$$
$$= (4\,\mathbf{i}) \times (40\,\mathbf{k})$$
$$= -160\,\mathbf{j} \text{ kNm}$$

The resultant moment at the origin is

$$\bar{M}_O = \bar{M}_O^{F_1} + \bar{M}_O^{F_2} + \bar{M}_O^{F_3} + \bar{M}_O^{F_4}$$
$$= (-60\,\mathbf{i} + 48\,\mathbf{j} - 80\,\mathbf{k}) + 0 + (-70.26\,\mathbf{i} - 56.22\,\mathbf{j} + 93.7\,\mathbf{k}) + (-160\,\mathbf{j})$$
$$\therefore \bar{M}_O = -130.26\,\mathbf{i} - 168.2\,\mathbf{j} + 13.7\,\mathbf{k} \text{ kNm}$$ ..... **Ans.**

The resultant force and couple moment at the origin is

$$\bar{R} = 25.54\,\mathbf{i} + 58.77\,\mathbf{j} + 49.21\,\mathbf{k} \text{ kN}$$
$$\bar{M}_O = -130.26\,\mathbf{i} - 168.2\,\mathbf{j} + 13.7\,\mathbf{k} \text{ kNm}$$ ..... **Ans.**

Ex. 7.14 Determine the resultant and resultant couple moment at a point A (3, 1, 2) m of the following force system

$\bar{F}_1 = 5\,\mathbf{i} + 8\,\mathbf{k}$ N acting at a point B (8, 3, 1) m

$\bar{F}_2 = 3\,\mathbf{i} + 2\,\mathbf{j} - 4\,\mathbf{k}$ N acting at O (0, 0, 0) m

$\bar{M}_1 = 12\,\mathbf{i} - 20\,\mathbf{j} + 9\,\mathbf{k}$ Nm

Solution: The given system is a general space force system of two forces and one couple. The forces and moments are already in the vector form.

$\bar{F}_1 = 5\,\mathbf{i} + 8\,\mathbf{k}$ N and $\bar{F}_2 = 3\,\mathbf{i} + 2\,\mathbf{j} - 4\,\mathbf{k}$ N

$\therefore$ The resultant force $\bar{R} = \bar{F}_1 + \bar{F}_2$

$$\bar{R} = (5\,\mathbf{i} + 8\,\mathbf{k}) + (3\,\mathbf{i} + 2\,\mathbf{j} - 4\,\mathbf{k})$$
$$\bar{R} = 8\,\mathbf{i} + 2\,\mathbf{j} + 4\,\mathbf{k} \text{ N}$$ ..... **Ans.**

To find the resultant moment at point A

Taking moment of all forces about point A

$$\bar{M}_A^{F_1} = \bar{r}_{AB} \times \bar{F}_1 \quad \text{where } \bar{r}_{AB} = 5\,\mathbf{i} + 2\,\mathbf{j} - \mathbf{k} \text{ m}$$
$$= (5\,\mathbf{i} + 2\,\mathbf{j} - \mathbf{k}) \times (5\,\mathbf{i} + 8\,\mathbf{k})$$
$$= 16\,\mathbf{i} - 45\,\mathbf{j} - 10\,\mathbf{k} \text{ Nm}$$

$$\bar{M}_A^{F_2} = \bar{r}_{AO} \times \bar{F}_2 \quad \text{where } \bar{r}_{AO} = -3\,\mathbf{i} - \mathbf{j} - 2\,\mathbf{k} \text{ m}$$
$$= (-3\,\mathbf{i} - \mathbf{j} - 2\,\mathbf{k}) \times (3\,\mathbf{i} + 2\,\mathbf{j} - 4\,\mathbf{k})$$
$$= 8\,\mathbf{i} - 18\,\mathbf{j} - 3\,\mathbf{k} \text{ Nm}$$

$\therefore$ The resultant moment $\bar{M} = \bar{M}_A^{F_1} + \bar{M}_A^{F_2} + \bar{M}_1$

$$= (16\,\mathbf{i} - 45\,\mathbf{j} - 10\,\mathbf{k}) + (8\,\mathbf{i} - 18\,\mathbf{j} - 3\,\mathbf{k}) + (12\,\mathbf{i} - 20\,\mathbf{j} + 9\,\mathbf{k})$$
$$= 36\,\mathbf{i} - 83\,\mathbf{j} - 4\,\mathbf{k} \text{ Nm}$$ .....**Ans.**

The resultant force and couple moment at the point A is

$$\bar{R} = 8\,\mathbf{i} + 2\,\mathbf{j} + 4\,\mathbf{k} \text{ N}$$ .....**Ans.**

$$\bar{M} = 36\,\mathbf{i} - 83\,\mathbf{j} - 4\,\mathbf{k} \text{ Nm}$$

Ex. 7.15 A rectangular parallelepiped carries three forces as shown. Reduce the force system to a resultant force applied at origin and a moment around the origin. ***(MU Dec 14)***

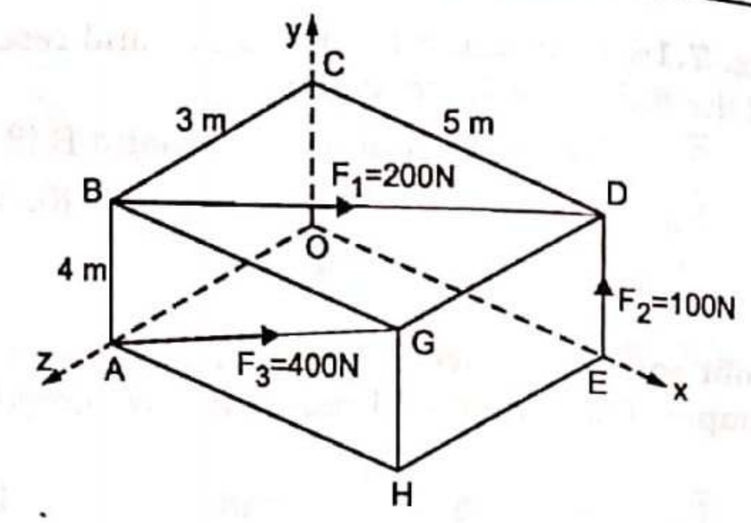

Solution: This is a General space force system consisting of three forces $F_1 = 200\,N$, $F_2 = 100\,N$ and $F_3 = 400\ N$.

Putting the forces in vector form.

$$\overline{F}_1 = F_1 . \hat{e}_{BD}$$

$$= 200\left[\frac{5\mathbf{i}+0\mathbf{j}-3\mathbf{k}}{\sqrt{5^2+3^2}}\right]$$

$$\therefore \quad \overline{F}_1 = 171.5\mathbf{i} - 102.9\mathbf{k}\ \ N$$

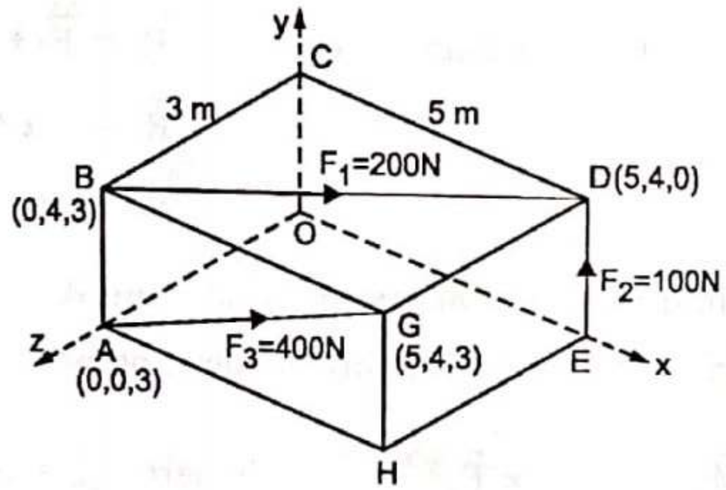

$\overline{F}_2 = 100\ \mathbf{j}\ \ N$ ..... Since the force acts along the y axis in the + ve sense.

$$\overline{F}_3 = F_3 . \hat{e}_{AG}$$

$$= 400\left[\frac{5\mathbf{i}+4\mathbf{j}+0\mathbf{k}}{\sqrt{5^2+4^2}}\right]$$

$$\therefore \quad \overline{F}_3 = 312.3\mathbf{i} + 249.9\mathbf{j}\ \ N$$

The Resultant force $\overline{R} = \overline{F}_1 + \overline{F}_2 + \overline{F}_3$

$$= (171.5\mathbf{i} - 102.9\mathbf{k}) + (100\,\mathbf{j}) + (312.3\mathbf{i} + 249.9\,\mathbf{j})$$

Or $\quad \overline{R} = 483.8\mathbf{i} + 349.9\,\mathbf{j} - 102.9\mathbf{k}\ \ N$

Since the resultant of the general system is required at the origin, taking moments of all the forces at the origin.

$$\overline{M}_O^{F_1} = \overline{r}_{OB} \times \overline{F}_1$$

$$= (4\mathbf{i} + 3\mathbf{k}) \times (171.5\mathbf{i} - 102.9\mathbf{k})$$

$$= -411.6\mathbf{i} + 514.5\,\mathbf{j} - 686\mathbf{k}\ \ Nm$$

$$\overline{M}_O^{F_2} = \overline{r}_{OD} \times \overline{F}_2$$

$$= (5\mathbf{i} + 4\,\mathbf{j}) \times (100\,\mathbf{j})$$

$$= 500\mathbf{k}\ \ Nm$$

$$\overline{M}_O^{F_3} = \overline{r}_{OA} \times \overline{F}_3$$

$$= (3\mathbf{k}) \times (312.3\,\mathbf{i} + 249.9\,\mathbf{j})$$

$$= -749.7\,\mathbf{i} + 936.9\,\mathbf{j}\ \ Nm$$

The resultant moment $\overline{M}_O = \overline{M}_O^{F_1} + \overline{M}_O^{F_2} + \overline{M}_O^{F_3}$

$$= (-411.6\mathbf{i} + 514.5\,\mathbf{j} - 686\mathbf{k}) + (500\mathbf{k}) + (-749.7\,\mathbf{i} + 936.9\,\mathbf{j})$$

$$\overline{M}_O = -1161.3\mathbf{i} + 1451.4\,\mathbf{j} - 186\mathbf{k}\ \ Nm$$

The resultant of General force system is $\overline{R} = 483.8\mathbf{i} + 349.9\,\mathbf{j} - 102.9\mathbf{k}\ \ N$

and the resultant moment $\overline{M}_O = -1161.3\mathbf{i} + 1451.4\,\mathbf{j} - 186\mathbf{k}\ \ Nm$ ..... **Ans.**

Ex. 7.16 Force F_1 = 500 N, F_2 = 800 N and F_3 = 600 N act on a vertical mast AB as shown. Find the resultant force and couple at the origin.

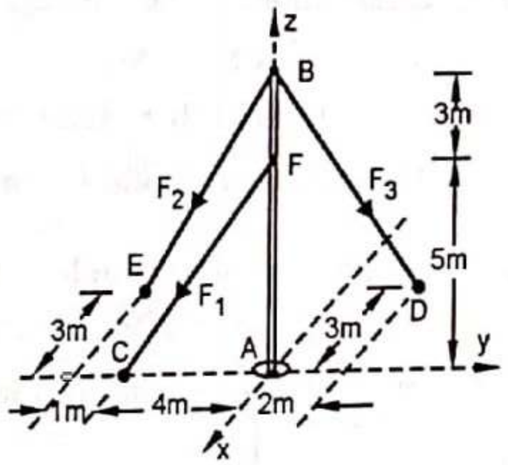

Solution: The given system is general system of three forces. The co-ordinates of the various points through which the forces pass are shown on the figure.

Putting the forces in vector form,

$$\overline{F}_1 = F_1 . \hat{e}_{FC}$$

$$= 500\left[\frac{-4\mathbf{i} - 5\mathbf{j}}{\sqrt{4^2+5^2}}\right]$$

$$= -312.3\,\mathbf{j} - 390.4\,\mathbf{k}\ \ N$$

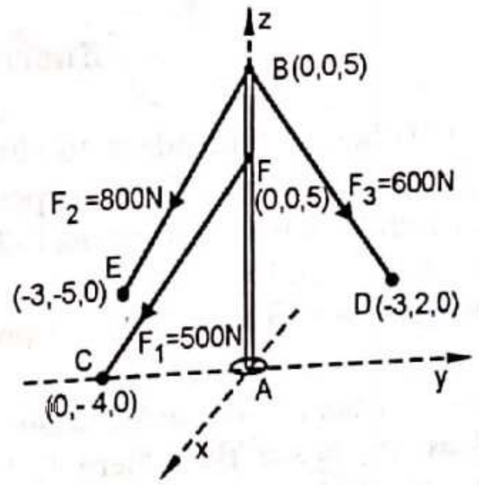

$$\overline{F}_2 = F_2 . \hat{e}_{BE}$$

$$= 800\left[\frac{-3\mathbf{i} - 5\mathbf{j} - 8\mathbf{k}}{\sqrt{3^2+5^2+8^2}}\right]$$

$$= -242.4\,\mathbf{i} - 404\,\mathbf{j} - 646.5\,\mathbf{k}\ \ N$$

$$\overline{F}_3 = F_3 . \hat{e}_{BD}$$

$$= 600\left[\frac{-3\mathbf{i} + 2\mathbf{j} - 8\mathbf{k}}{\sqrt{3^2+2^2+8^2}}\right] = -205.1\,\mathbf{i} + 136.7\,\mathbf{j} - 547\,\mathbf{k}\ \ N$$

The Resultant force $\overline{R} = \overline{F}_1 + \overline{F}_2 + \overline{F}_3$

$$\therefore \overline{R} = (-312.3\,\mathbf{j} - 390.4\,\mathbf{k}) + (-242.4\,\mathbf{i} - 404\,\mathbf{j} - 646.5\,\mathbf{k}) + (-205.1\,\mathbf{i} + 136.7\,\mathbf{j} - 547\,\mathbf{k})$$

$$\therefore \overline{R} = -447.5\,\mathbf{i} - 579.6\,\mathbf{j} - 1583.9\,\mathbf{k}\ \ N$$ ..... **Ans.**

Taking moment of all forces about the specified point, which is the origin A (0, 0, 0).

$$\overline{M}_A^{F_1} = \overline{r}_{AC} \times \overline{F}_1 \qquad \text{where } \overline{r}_{AC} = -4\,\mathbf{j}\ \ m$$

$$= (-4\,\mathbf{j}) \times (-312.3\,\mathbf{j} - 390.4\,\mathbf{k})$$

$$= 1561.6\,\mathbf{i}\ \ Nm$$

$\overline{M}_A^{F_2} = \overline{r}_{AB} \times \overline{F}_2$ where $\overline{r}_{AB} = 8\,\mathbf{k}$ m

$= (8\,\mathbf{k}) \times (-242.4\,\mathbf{i} - 404\,\mathbf{j} - 646.5\,\mathbf{k})$

$= 3232\,\mathbf{i} - 1939.2\,\mathbf{j}$ Nm

$\overline{M}_A^{F_3} = \overline{r}_{AB} \times \overline{F}_3$ where $\overline{r}_{AB} = 8\,\mathbf{k}$ m

$= (8\,\mathbf{k}) \times (-205.1\,\mathbf{i} + 136.7\,\mathbf{j} - 547\,\mathbf{k})$

$= -1093.6\,\mathbf{i} - 1640.8\,\mathbf{j}$ Nm

The resultant moment at the origin is

$\overline{M}_A = \overline{M}_A^{F_1} + \overline{M}_A^{F_2} + \overline{M}_A^{F_3}$

$= (1561.6\,\mathbf{i}) + (3232\,\mathbf{i} - 1939.2\,\mathbf{j}) + (-1093.6\,\mathbf{i} - 1640.8\,\mathbf{j})$

$\therefore \quad \overline{M}_A = 3700\,\mathbf{i} - 3580\,\mathbf{j}$ Nm ..... **Ans.**

The resultant force and couple at the origin is

$\overline{R} = -447.5\,\mathbf{i} - 579.6\,\mathbf{j} - 1583.9\,\mathbf{k}$ N ..... **Ans.**

$\overline{M}_A = 3700\,\mathbf{i} - 3580\,\mathbf{j}$ Nm ..... **Ans.**

Exercise 7.2

P1. A force P_1 = 10 N in magnitude acts along direction AB whose co–ordinates of points A and B are (3, 2, –1) and (8, 5, 3) respectively. Another force P_2 = 5 N in magnitude acts along BC where C has co-ordinates (–2, 11, –5). Determine

a. The resultant of P_1 and P_2.

b. The moment of the resultant about a point D (1, 1, 1).

P2. A force 5 kN is acting along AB where A (0, 0, -1) m and B (5, -2, -4) m. Another force 8 kN is acting along BC where C (3, 3, 4) m. Find (a) resultant of two forces (b) moment of resultant force about a point D (0, 3, -2) m. ***(MU Dec 2015)***

P3. Knowing that the tension in AC = 20 kN, determine the required values of T_{AB} and T_{AD} so that the resultant of the three forces applied at A is vertical.
Also find the resultant.

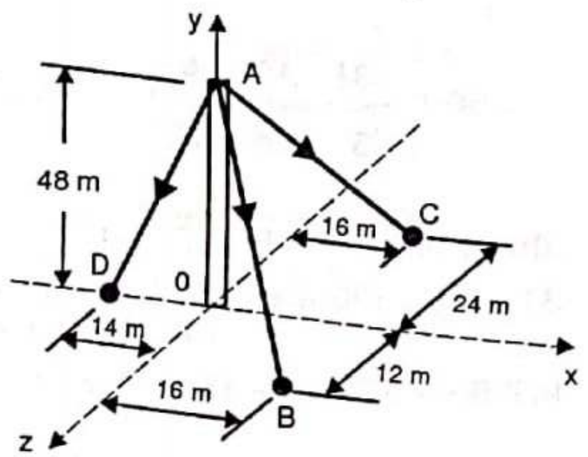

P4. The lines of action of three forces concurrent at origin 'O' pass respectively through points A (-1, 2, 4), B (3, 0, –3) and C (2, –2, 4) m. The magnitude of forces are 40 N, 10 N and 30 N respectively. Determine the magnitude and direction of their resultant. ***(MU May 14)***

P5. A plate foundation is subjected to five vertical forces as shown. Replace these five forces by means of a single vertical force and find the point of replacement.

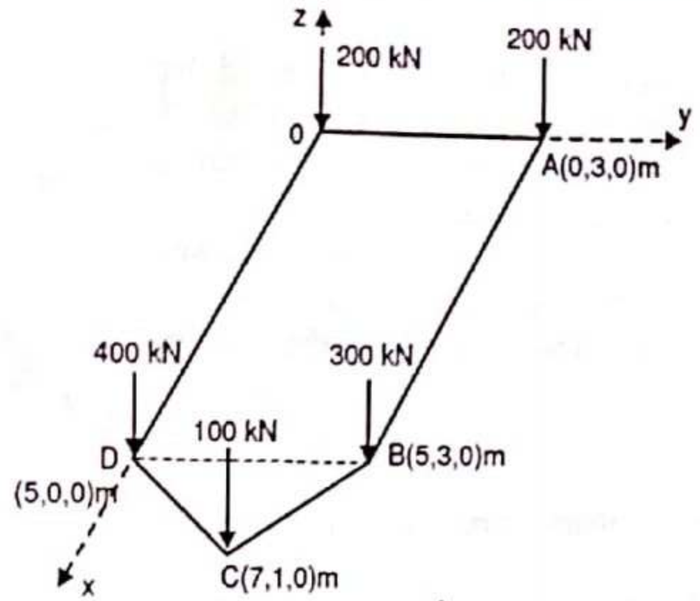

P6. A square foundation mat supports four columns as shown in figure. Determine magnitude and point of application of resultant of four loads.

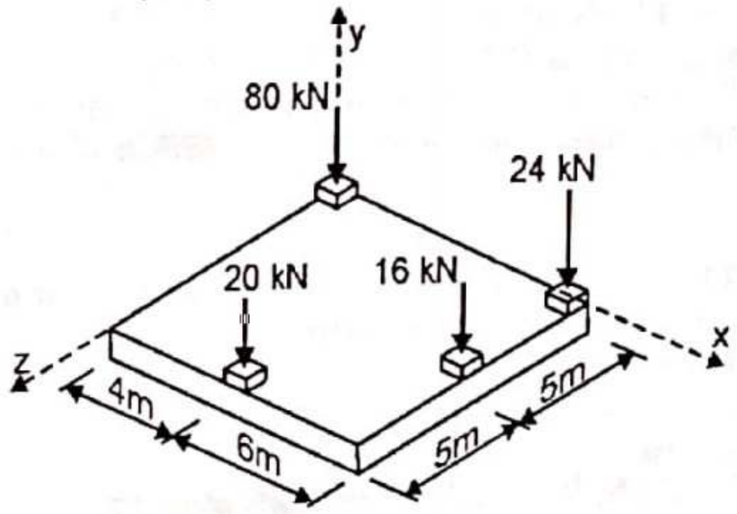

P7. A rectangular parallelepiped carries four forces as shown in the figure. Reduce the force system to a resultant force applied at the origin and moment around the origin.
OA = 5 m, OB = 2 m, OC = 4 m. ***(M. U Dec 12)***

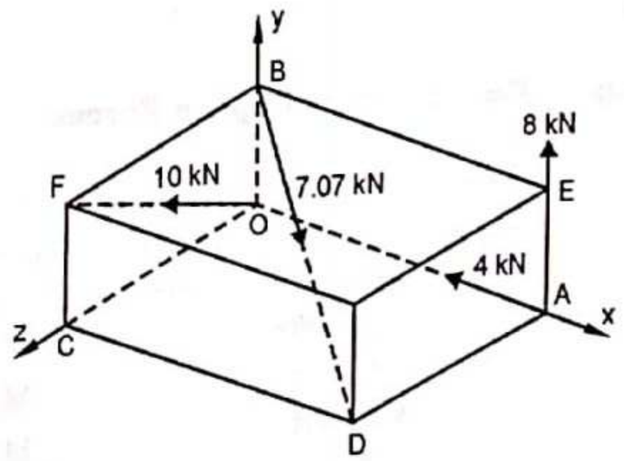

P8. Figure shows a rectangular parallelepiped subjected to four forces in the direction shown. Reduce them to a resultant force at the origin and a moment.

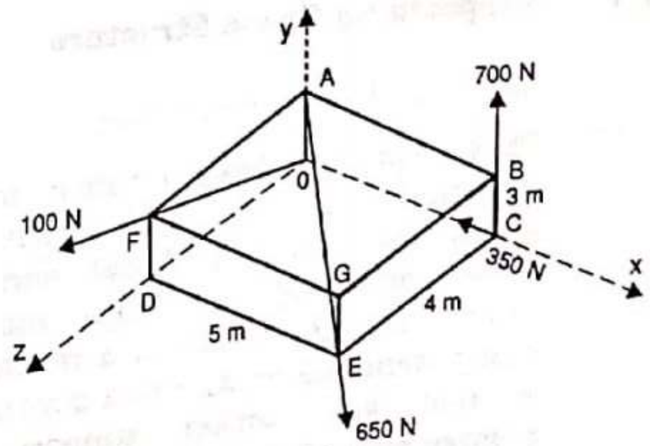

P9. A tetrahedron A B C D is loaded by forces F_1 = 100 N at A along DA, F_2 = 200 N at B along CB and F_3 = 300 N at C along DC as shown in the figure. Replace the three force system by a single resultant force R at B and a single resultant moment vector M at B. Take the co-ordinates in metre units.

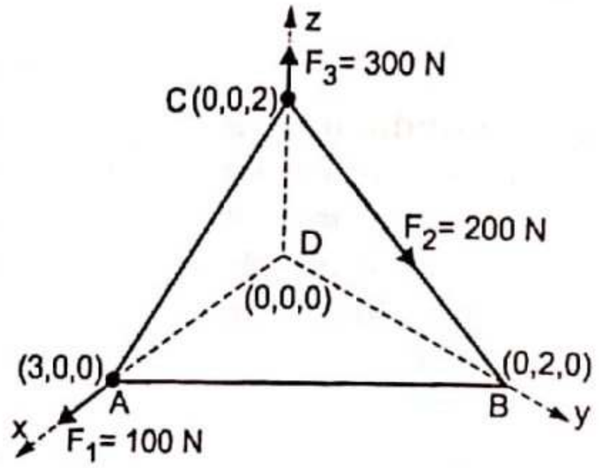

P10. The following forces act on the block shown in figure.
F_1 = 40 kN at point C along CD, F_2 = 30 kN at point D along DB and F_3 = 100 kN at point D along DE. Find the resultant force and resultant moment of these forces acting at O. ***(SPCE Nov 12)***

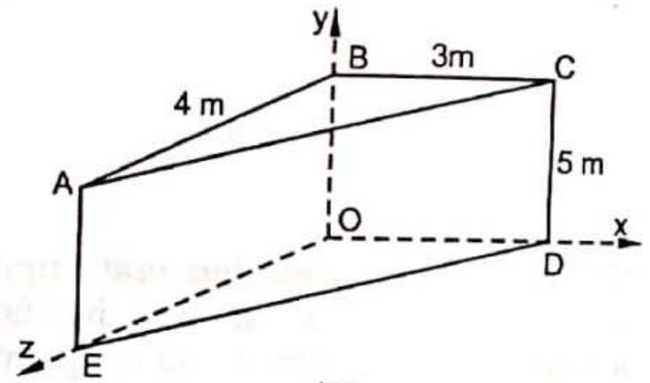

P11. Find resultant force and moment about origin for the forces shown in figure.
AB = DE = 2 m,
CB = 3 m, CD = 4 m,
F_1 = 10 N, F_2 = 15 N,
F_3 = 20 N, F_4 = 25 N. ***(NMIMS May 17)***

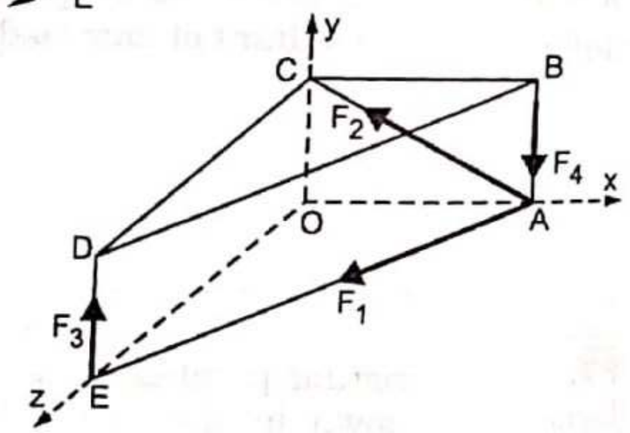

7.6 Equilibrium of Space Forces

When the resultant of a system is zero, the system is said to be in equilibrium. For the resultant to be zero, the resultant force $\overline{F}$ and the resultant moment $\overline{M}$ should be zero. This gives us six scalar equations of equilibrium viz.

$\Sigma F_x = 0$ $\quad$ $\Sigma M_x = 0$
$\Sigma F_y = 0$ $\quad$ $\Sigma M_y = 0$
$\Sigma F_z = 0$ $\quad$ $\Sigma M_z = 0$

7.7 Supports for Space Structure

(a) Ball and Socket Support

This support allows rotation in all the three direction, unlike a hinge which allows rotation about one axis only. A ball and socket support does not allow any linear movement in any direction. This results in a reaction force having components along x, y and z axis. Fig. 7.9 shows a ball and socket support offering three components of reaction force.

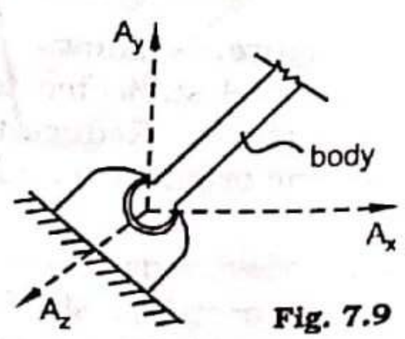

Fig. 7.9

(b) Rope Support

It offers a tension force T which acts away from the body being supported by ropes. Example, ropes AB, AC and AD support a pole OA as shown.
Refer Fig. 7.10

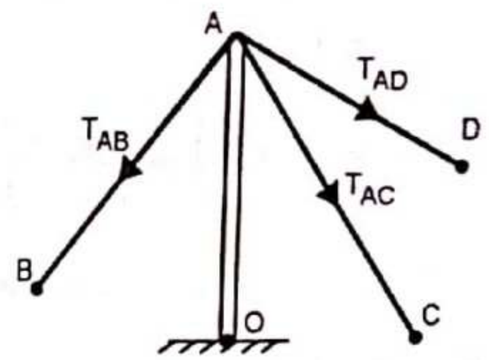

Fig. 7.10

7.8 Equilibrium of Concurrent Space Force System

For a concurrent system, only the resultant force needs to be zero. This is the necessary and sufficient condition of equilibrium. This gives us three scalar equations of equilibrium, viz.

$\Sigma F_x = 0$ $\quad$ $\Sigma F_y = 0$ $\quad$ $\Sigma F_z = 0$

We can also use the other three scalar equations of equilibrium viz.

$\Sigma M_x = 0$ $\quad$ $\Sigma M_y = 0$ $\quad$ $\Sigma M_z = 0$

Ex. 7.17 Figure shows a tripod carrying a load of 5 kN. Supports A, B, C are coplanar in plane x-z. Compute the forces in members AD, BD and CD. Assume all joints to be of ball and socket type.

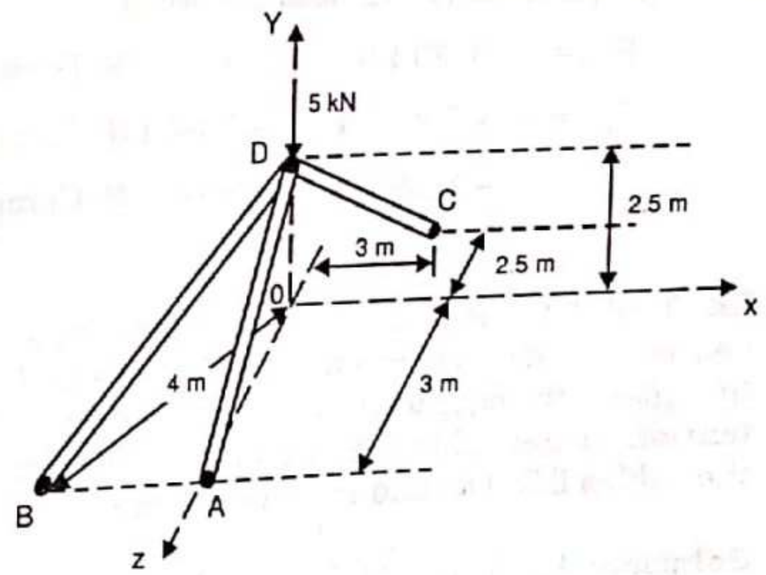

Solution: Since the load of 5 kN is being applied at the joint D of the tripod structure, axial forces get developed in the members forming a concurrent system at D. Let F_{AD}, F_{BD} and F_{CD} be the axial forces developed in the members AD, BD and CD respectively. Let us initially assume the forces to be of tensile nature. The co-ordinates of the joints through which the forces pass are shown on the figure.

Putting the forces in vector form

$$\overline{F}_{AD} = F_{AD}.\hat{e}_{DA}$$

$$= F_{AD}\left(\frac{-2.5\,\mathbf{j} + 3\,\mathbf{k}}{\sqrt{2.5^2 + 3^2}}\right)$$

$$= F_{AD}\,(-0.64\,\mathbf{j} + 0.768\,\mathbf{k})$$

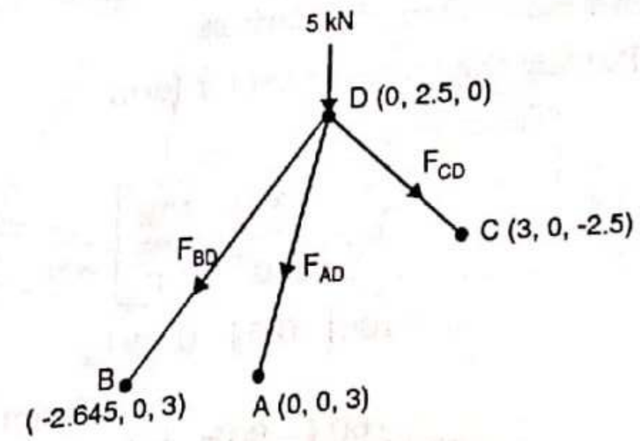

$$\overline{F}_{BD} = F_{BD}.\hat{e}_{DB}$$

$$= F_{BD}\left(\frac{-2.645\,\mathbf{i} - 2.5\,\mathbf{j} + 3\,\mathbf{k}}{\sqrt{2.645^2 + 2.5^2 + 3^2}}\right)$$

$$= F_{BD}\,(-0.56\,\mathbf{i} - 0.53\,\mathbf{j} - 0.636\,\mathbf{k})$$

$\overline{F}_{CD} = F_{CD}.\hat{e}_{DC}$

$$= F_{CD}\left(\frac{3\,\mathbf{i} - 2.5\,\mathbf{j} - 2.5\,\mathbf{k}}{\sqrt{3^2 + 2.5^2 + 2.5^2}}\right) = F_{CD}\,(0.647\,\mathbf{i} - 0.539\,\mathbf{j} - 0.539\,\mathbf{k}$$

$\overline{W} = -5\,\mathbf{j}$ kN since it is parallel to y axis and directed in the – ve direction.

Applying COE

$\Sigma F_x = 0$

$-0.56\,F_{BD} + 0.647\,F_{CD} = 0$ --------- (1)

$\Sigma F_y = 0$

$-0.64\,F_{AD} - 0.53\,F_{BD} - 0.539\,F_{CD} - 5 = 0$ --------- (2)

$\Sigma F_z = 0$

$0.768\,F_{AD} + 0.636\,F_{BD} - 0.539\,F_{CD} = 0$ --------- (3)

Solving equations (1), (2) and (3), we get

$F_{AD} =$ 1.29 kN = 1.29 kN Tension ..... **Ans.**

$F_{BD} =$ – 5.84 kN = 5.84 kN Compression ..... **Ans.**

$F_{CD} =$ – 5.06 kN = 5.06 kN Compression ..... **Ans.**

Ex. 7.18 A vertical mast OD is having base O with ball and socket. Three cables DA, DB and DC keep the mast in equilibrium as shown in figure. If tension in the cable DA is 100 kN, find tensions in the cables DB, DC and force in the mast.

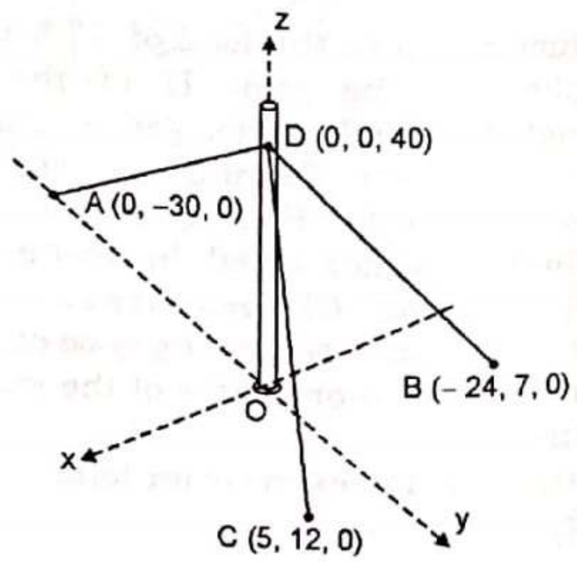

Solution: Let T_{DA}, T_{DB}, T_{DC} be the tension force in the three cables DA, DB and DC respectively. Let F be the force in the mast OD. Let us assume it to be compressive. All the four forces form a concurrent system at D in equilibrium.

Putting the forces in vector form.

$\overline{T}_{DA} = T_{DA}.\hat{e}_{DA}$

$$= T_{DA}\left[\frac{-30\mathbf{j} - 40\mathbf{k}}{\sqrt{30^2 + 40^2}}\right]$$

$= 100[-0.6\mathbf{j} - 0.8\mathbf{k}]$

..... Given T_{DA} = 100 kN

$= -60\mathbf{j} - 80\mathbf{k}$ kN

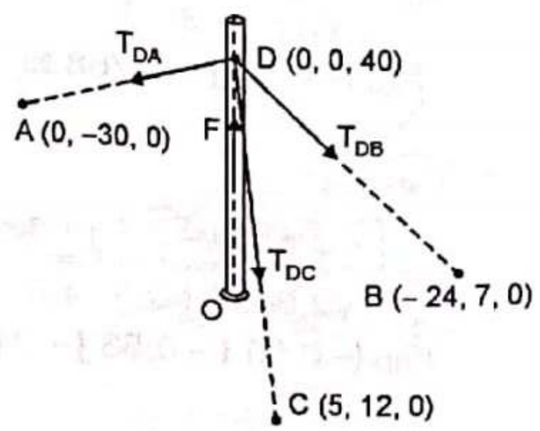

$\overline{T}_{DB} = T_{DB}.\hat{e}_{DB}$

$$= T_{DB}\left[\frac{-24\mathbf{i} + 7\mathbf{j} - 40\mathbf{k}}{\sqrt{24^2 + 7^2 + 40^2}}\right] = T_{DB}\,(-0.509\mathbf{i} + 0.148\,\mathbf{j} - 0.848\,\mathbf{k})$$

$\overline{T}_{DC} = T_{DC}.\hat{e}_{DC}$

$$= T_{DC}\left[\frac{5\,\mathbf{i} + 12\mathbf{j} - 40\mathbf{k}}{\sqrt{5^2 + 12^2 + 40^2}}\right] = T_{DC}\,(0.119\mathbf{i} + 0.285\,\mathbf{j} - 0.951\mathbf{k})$$

$\overline{F} = F\,k$ ..... since F acts along positive z axis.

Applying COE

$\Sigma F_x = 0$

$-0.509\,T_{DB} + 0.119\,T_{DC} = 0$ ..... (1)

$\Sigma F_y = 0$

$0.148\,T_{DB} + 0.285\,T_{DC} - 60 = 0$ ..... (2)

$\Sigma F_z = 0$

$-0.848\,T_{DB} - 0.951\,T_{DC} + F - 80 = 0$ ..... (3)

Solving equations (1), (2) and (3) we get

$T_{DB} = 43.89$ kN, $T_{DC} = 187.73$ kN and $F = 295.75$ kN (Compressive) ..... **Ans.**

Ex. 7.19 A 0.6 m × 0.9 plate weighing 120 N is lifted by three cables which are joined at D directly above the centre of the plate. Determine the tension in each cable.

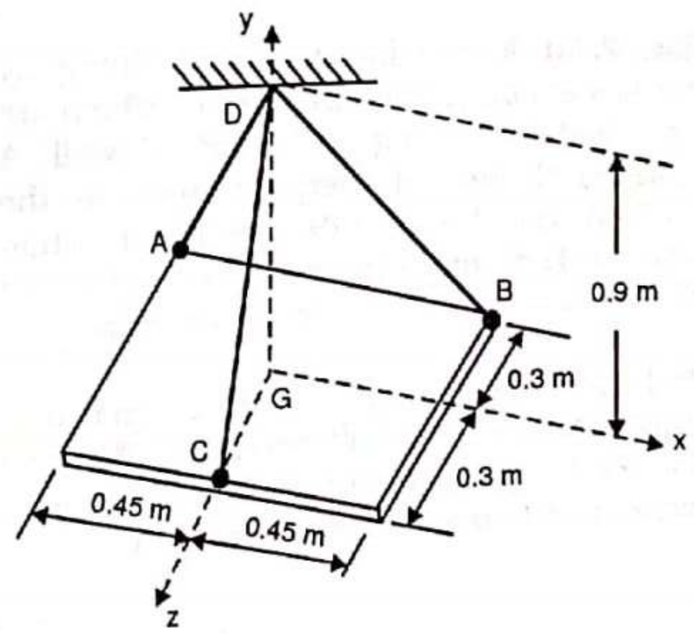

Solution: At support D, tensions in the cables and the reaction R_D form a concurrent system in equilibrium. Drawing the FBD of the joint D and finding the co-ordinates of the points through which the forces pass.

Putting the forces in vector form

$\overline{T}_{DA} = T_{DA}.\hat{e}_{DA}$

$$= T_{DA}\left(\frac{-0.45\,\mathbf{i} - 0.9\,\mathbf{j} - 0.3\,\mathbf{k}}{\sqrt{0.45^2 + 0.9^2 + 0.3^2}}\right) = T_{DA}\,(-0.428\,\mathbf{i} - 0.857\,\mathbf{j} - 0.286\,\mathbf{k})$$

$$\overline{T}_{DB} = T_{DB}\left(\frac{0.45\,\mathbf{i} - 0.9\,\mathbf{j} - 0.3\,\mathbf{k}}{\sqrt{0.45^2 + 0.9^2 + 0.3^2}}\right)$$

$$= T_{DB}\,(0.428\,\mathbf{i} - 0.857\,\mathbf{j} - 0.286\,\mathbf{k})$$

$$\overline{T}_{DC} = T_{DC}\left(\frac{-0.9\,\mathbf{j} + 0.3\,\mathbf{k}}{\sqrt{0.9^2 + 0.3^2}}\right)$$

$$= T_{DC}\,(-0.948\,\mathbf{j} + 0.316\,\mathbf{k})$$

$\overline{R}_D = 120\,\mathbf{j}$ since reaction R_D would be equal to the weight in magnitude and direction and opposite in sense.

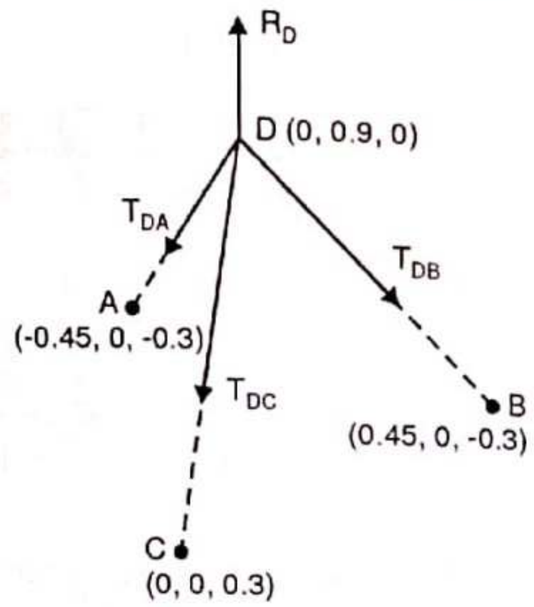

Applying COE

$\Sigma F_x = 0$

$-0.428\,T_{DA} + 0.428\,T_{DB} = 0$ ---------- (1)

$\Sigma F_y = 0$

$-0.857\,T_{DA} - 0.857\,T_{DB} - 0.948\,T_{DC} + 120 = 0$ ---------- (2)

$\Sigma F_z = 0$

$-0.286\,T_{DA} - 0.286\,T_{DB} + 0.316\,T_{DC} = 0$ ---------- (3)

Solving equations (1), (2) and (3), we get

$T_{DA} = T_{DB} = 35$ N and $T_{DC} = 63.3$ N ..... **Ans.**

Ex. 7.20 A 200 kg cylinder is hung by means of two cables AB and AC, which are attached to the top of a vertical wall. A horizontal force P perpendicular to the wall holds the cylinder in the position shown. Determine the magnitude of P and the tension in each cable. Refer figure.

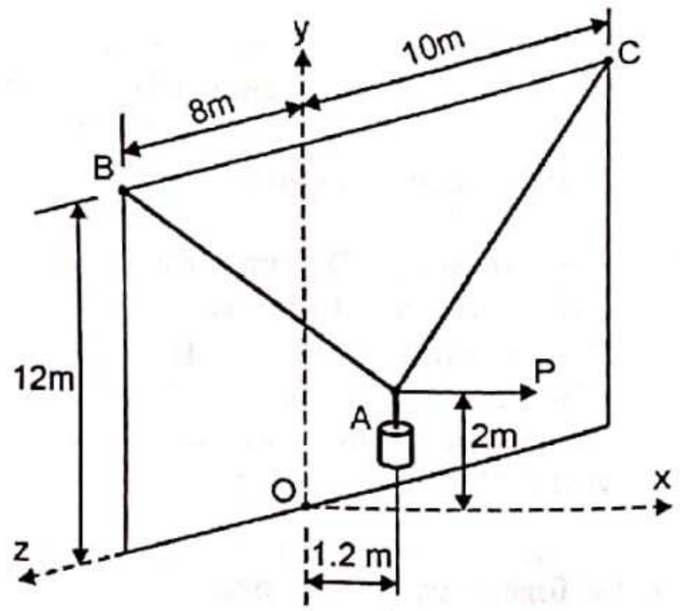

Solution: Let T_{AB} and T_{AC} be the tension in cable AB and AC respectively. All four forces T_{AB}, T_{AC}, P and weight W form a concurrent space force system at A.

Putting the forces in vector form.

$$\overline{T}_{AB} = T_{AB}\cdot\hat{e}_{AB}$$

$$= T_{AB}\left[\frac{-1.2\,\mathbf{i} + 10\,\mathbf{j} + 8\,\mathbf{k}}{\sqrt{1.2^2 + 10^2 + 8^2}}\right]$$

$$= T_{AB}\,(-0.094\,\mathbf{i} + 0.784\,\mathbf{j} + 0.627\,\mathbf{k})$$

$$\overline{T}_{AC} = T_{AC}\cdot\hat{e}_{AC}$$

$$= T_{AC}\left[\frac{-1.2\,\mathbf{i} + 10\,\mathbf{j} - 10\,\mathbf{k}}{\sqrt{1.2^2 + 10^2 + 10^2}}\right]$$

$$= T_{AC}\,(-0.0845\,\mathbf{i} + 0.705\,\mathbf{j} - 0.705\,\mathbf{k})$$

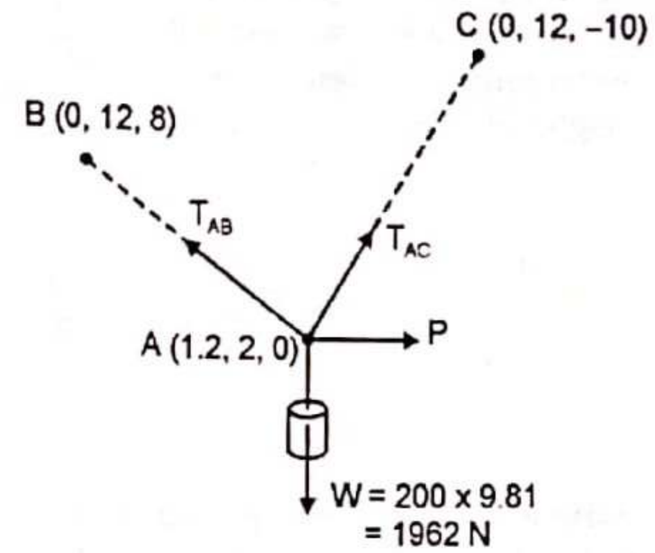

$\overline{W} = -1962\,\mathbf{j}$ N ..... since weight of cylinder acts parallel to negative y axis.

$\overline{P} = -P\,\mathbf{i}$ ..... since force P acts parallel to positive x axis.

Applying COE

$\Sigma F_x = 0$

$-0.904\,T_{AB} - 0.0845\,T_{AC} + P = 0$ ..... (1)

$\Sigma F_y = 0$

$0.784\,T_{AB} + 0.705\,T_{AC} - 1962 = 0$ ..... (2)

$\Sigma F_z = 0$

$0.627\,T_{AB} - 0.705\,T_{AC} = 0$ ..... (3)

Solving equations (1), (2) and (3) we get

$T_{AB} = 1390.5$ N, $T_{AC} = 1236.7$ N and $P = 1361.5$ N ..... **Ans.**

7.9 Equilibrium of Non-Concurrent Space Force System

For equilibrium of both parallel and general space force systems, all the six scalar equations of equilibrium are applicable viz.

$\Sigma F_x = 0$	$\Sigma M_x = 0$
$\Sigma F_y = 0$	$\Sigma M_y = 0$
$\Sigma F_z = 0$	$\Sigma M_z = 0$

Ex. 7.20 Find the tension in each of the cable supporting the rectangular plate. The plate weighs 500 N.

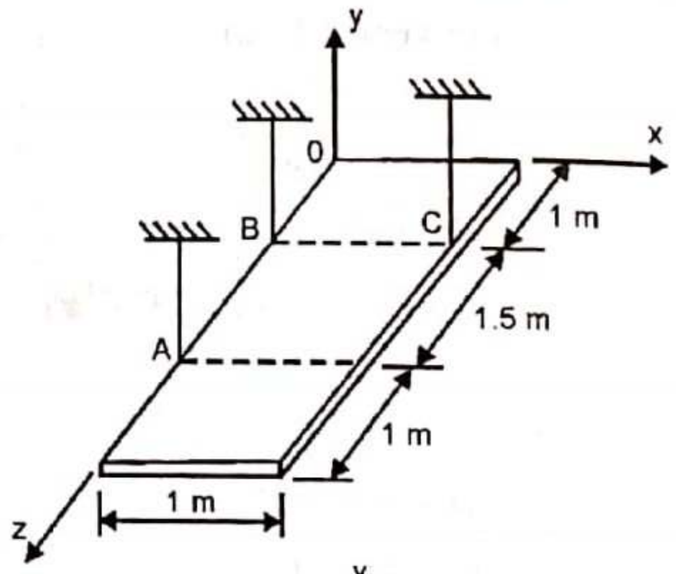

Solution: The given system is a parallel system of four forces. Let T_A, T_B and T_C be the tensions in the three cables at A, B and C respectively. Let W be the weight of the plate. FBD of the plate is shown in the figure.

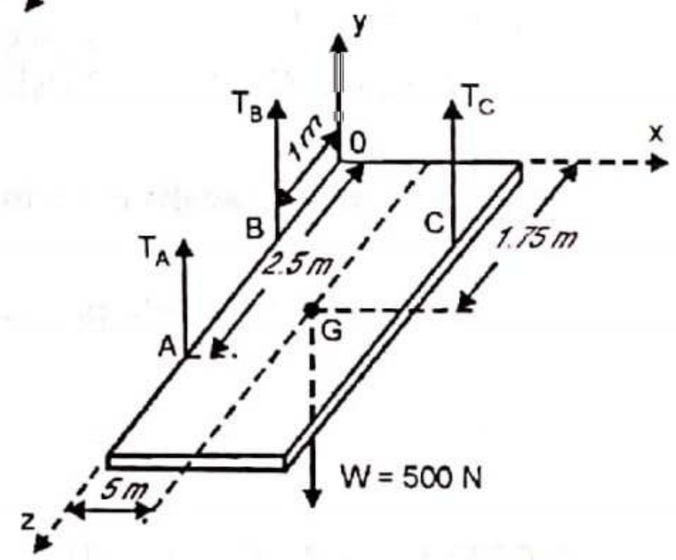

Applying COE

Equating moments @ xx axis to zero.

$$\Sigma M_{xx} = 0$$

$$-T_A \times 2.5 - T_B \times 1 - T_C \times 1 + 500 \times 1.75 = 0$$

$$2.5\,T_A + T_B + T_C = 875 \quad \text{..... (1)}$$

Equating moments @ zz axis to zero.

$$\Sigma M_{zz} = 0$$

$$-T_C \times 1 - 500 \times 0.5 = 0$$

$$\therefore \quad T_C = 250 \text{ N}$$

$$\Sigma F_y = 0$$

$$T_A + T_B + T_C - 500 = 0 \quad \text{..... (2)}$$

Subsituting value of T_C in equation (2)

$$T_A + T_B + 250 - 500 = 0$$

$$T_A + T_B = 250 \quad \text{..... (3)}$$

Subsituting value of T_C in equation (2)

$$2.5\,T_A + T_B + 250 = 875$$

$$\therefore \quad 2.5\,T_A + T_B = 625 \quad \text{..... (4)}$$

Solving equations (3) and (4), we get

$T_A = 250$ N and $T_B = 0$ ..... **Ans.**

Ex. 7.21 A vertical mast AB is supported at A by a ball and socket joint and by cables BC and DE. A force $\bar{F} = 500\,\mathbf{i} + 400\,\mathbf{j} - 300\,\mathbf{k}$ N is applied at B. Find the reaction at A.

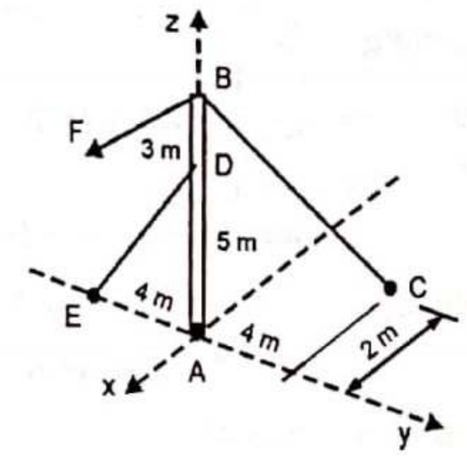

Solution: The given system is a general space force system of four forces. Figure shows the FBD of the mast AB. The ball and socket offers a force reaction R_A having components A_x, A_y and A_z initially assumed to act along + ve direction of axes. Let T_{DE} and T_{BC} be the tension in the cables DE and BC respectively.

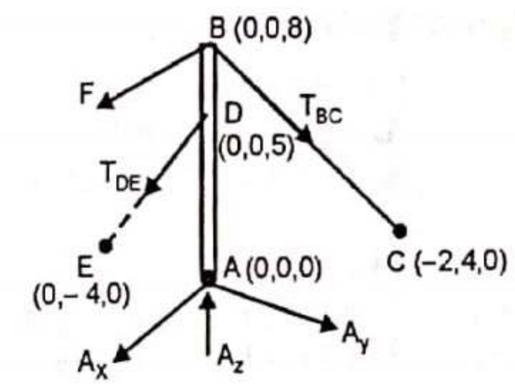

Putting the forces in vector form,

$$\bar{F} = 500\,\mathbf{i} + 400\,\mathbf{j} - 300\,\mathbf{k} \quad \text{..... given}$$

$$\bar{T}_{BC} = T_{BC}.\hat{e}_{BC} = T_{BC}\left(\frac{-2\,\mathbf{i} + 4\,\mathbf{j} - 8\,\mathbf{k}}{\sqrt{2^2 + 4^2 + 8^2}}\right)$$

$$= T_{BC}\,(-0.218\,\mathbf{i} + 0.436\,\mathbf{j} - 0.873\,\mathbf{k})$$

$$\bar{T}_{DE} = T_{DE}.\hat{e}_{DE}$$

$$= T_{DE}\left(\frac{-4\,\mathbf{j} - 5\,\mathbf{k}}{\sqrt{4^2 + 5^2}}\right) = T_{DE}\,(-0.625\,\mathbf{j} - 0.781\,\mathbf{k})$$

$$\bar{R}_A = A_x\,\mathbf{i} + A_y\,\mathbf{j} + A_z\,\mathbf{k}$$

Taking moments of all forces about ball and socket A.

$$\bar{M}_A^F = \bar{r}_{AB} \times \bar{F} \qquad \text{where } \bar{r}_{AB} = 8\,\mathbf{k} \text{ m}$$

$$= (8\,\mathbf{k}) \times (500\,\mathbf{i} + 400\,\mathbf{j} - 300\,\mathbf{k})$$

$$\bar{M}_A^F = -3200\,\mathbf{i} + 4000\,\mathbf{j} \quad \text{Nm}$$

$$\bar{M}_A^{T_{BC}} = \bar{r}_{AB} \times \bar{T}_{BC} \qquad \text{where } \bar{r}_{AB} = 8\,\mathbf{k} \text{ m}$$

$$= (8\,\mathbf{k}) \times \bar{T}_{BC}\,(-0.218\,\mathbf{i} + 0.436\,\mathbf{j} - 0.873\,\mathbf{k})$$

$$\bar{M}_A^{T_{BC}} = -3.488\,\bar{T}_{BC}\,\mathbf{i} - 1.744\,\bar{T}_{BC}\,\mathbf{j} \quad \text{Nm}$$

$$\bar{M}_A^{T_{DE}} = \bar{r}_{AD} \times \bar{T}_{DE} \qquad \text{where } \bar{r}_{AD} = 5\,\mathbf{k} \text{ m}$$

$$= (5\,\mathbf{k}) \times \bar{T}_{DE}\,(-0.625\,\mathbf{j} - 0.0781\,\mathbf{k})$$

$$\bar{M}_A^R = 0 \qquad \text{... since } R_A \text{ passes through A}$$

Applying COE

$\Sigma M_x = 0$

$-3.488\ T_{BC} + 3.125\ T_{DE} - 3200 = 0$ --------- (1)

$\Sigma M_y = 0$

$-1.744\ T_{BC} + 4000 = 0$ --------- (2)

Solving equations (1) and (2) we get

$T_{BC} = 2293.6$ N and $T_{DE} = 3584$ N .....**Ans.**

To find reaction at A

Applying COE

$\Sigma F_x = 0$

$A_x + 500 - 0.218\ T_{BC} = 0$

$A_x + 500 - 0.218\ (2293.6) = 0 \quad \therefore \quad A_x = 0$

$\Sigma F_y = 0$

$A_y + 400 + 0.436\ T_{BC} - 0.625\ T_{DE} = 0$

$A_y + 400 + 0.436\ (2293.6) - 0.625\ (3584) = 0 \quad \therefore \quad A_y = 840$ N

$\Sigma F_z = 0$

$A_z - 300 - 0.873\ T_{BC} - 0.781\ T_{DE} = 0$

$A_z - 300 - 0.873\ (2293.6) - 0.781\ (3584) = 0 \quad \therefore \quad A_z = 5101$ N

The reaction R_A at the ball and socket support at A is

$\overline{R}_A = 840\ \mathbf{j} + 5101\ \mathbf{k}$ N ..... **Ans.**

Exercise 7.3

P1. A boom AB supports a load of 1000 N as shown. Neglect weight of the boom. Determine tension in each cable and the reaction at A.

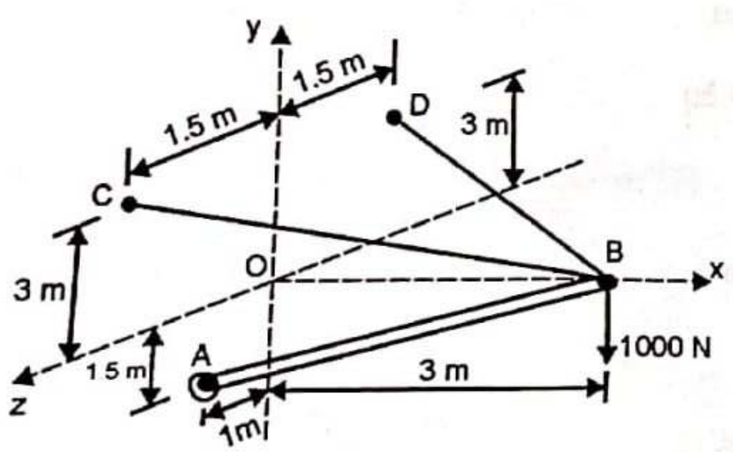

P2. A vertical load of 1100 N is supported by the three rods shown in figure. Find the force in each rod. Points C, O and D are in XZ plane while point B lies 5 m above this plane.

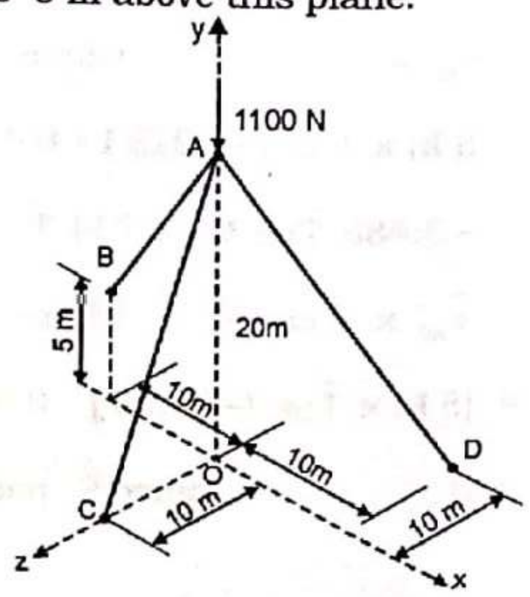

P3. A vertical load of 1000 N is supported by three bars as shown. Find the force in each bar. Point C, O and D are in the x-z plane while B is 1.5 m above this plane.

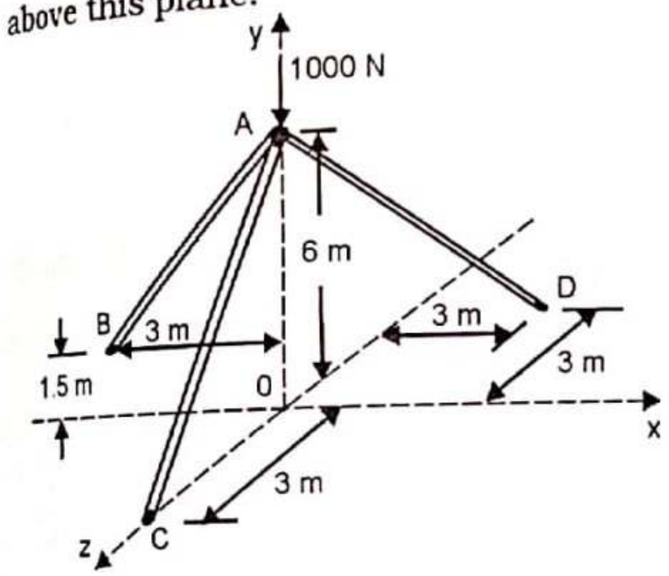

P4. A vertical tower DC shown is subjected to a horizontal force P = 50 kN at its top and is anchored by two similar guy wires BC and AC. Calculate

a. Tension in the guy wires.

b. Thrust in the tower pole.

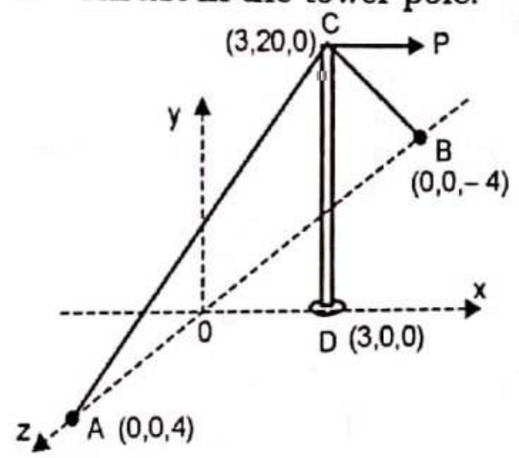

P5. A square steel plate 2400 mm × 2400 mm has a mass of 1800 kg with mass centre at G. Calculate the tension in each of the three cables with which the plate is lifted while remaining horizontal. Length DG = 2400 mm

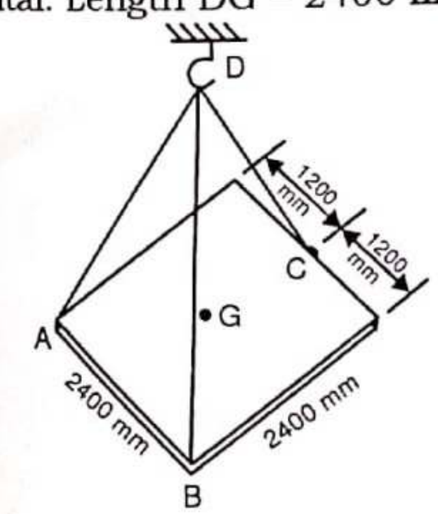

P6. A crate is supported by three cables as shown. Determine the weight of the crate, if the tension in the cable AB is 750 N.

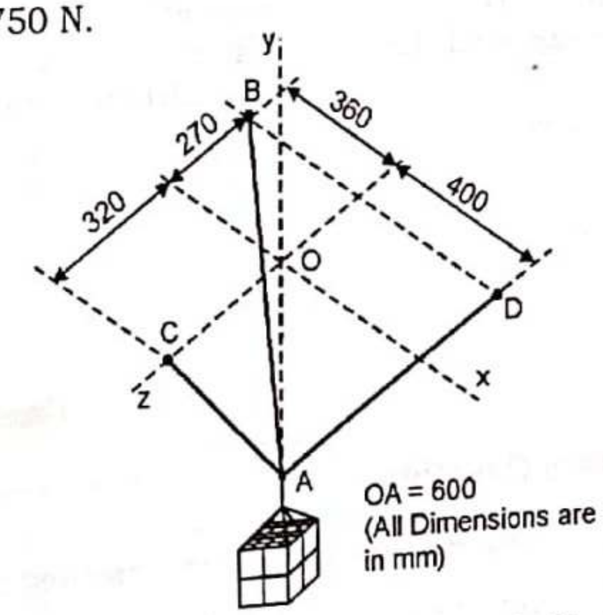

P7. Determine tension in cable BC and BD and reactions at the ball socket joint A for the mast as shown. Point D lies on x-y plane. 1 kN force acts parallel to y axis.

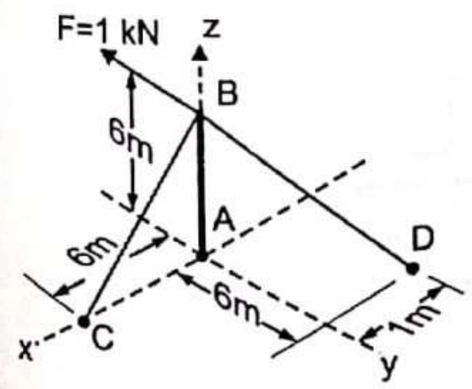

P8. A load of 500 N is held in equilibrium by means of two strings CA and CB and by a force P. Determine tensions in strings and magnitude of P.

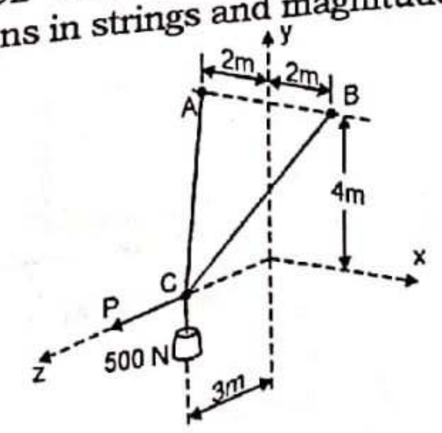

P9. A vertical mast OD is having base 'O' with ball and socket. Three cables DA, DB and DC keep the mast in equilibrium. If tension in the cable DA is 100 kN, find tensions in the cables DB and DC and force in the mast.

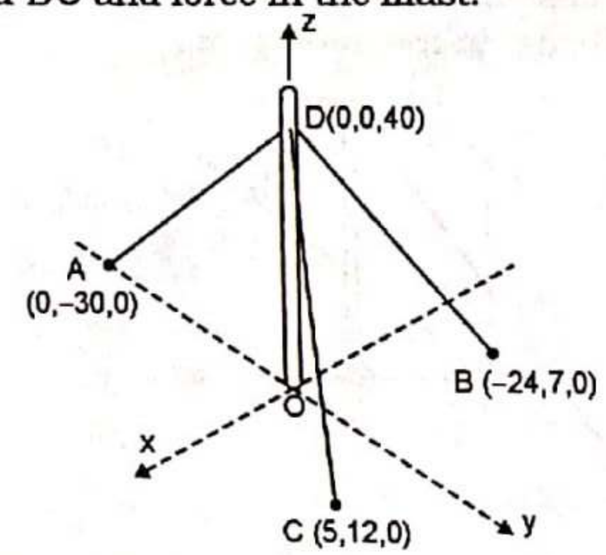

P10. A plate ACED 10 mm thick weighs 7600 kg/m³. It is held in horizontal plane by three wires at A, B and C. find tensions in the wires.

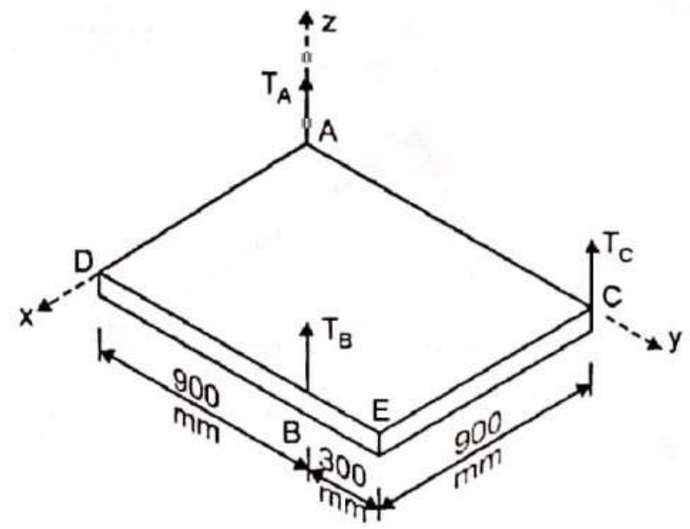

P11. A T-shaped rod is suspended using three cable as shown. It supports a load of 100 N. Neglecting the weight of the rods, find the tension in each cable. ***(MU Dec 16)***

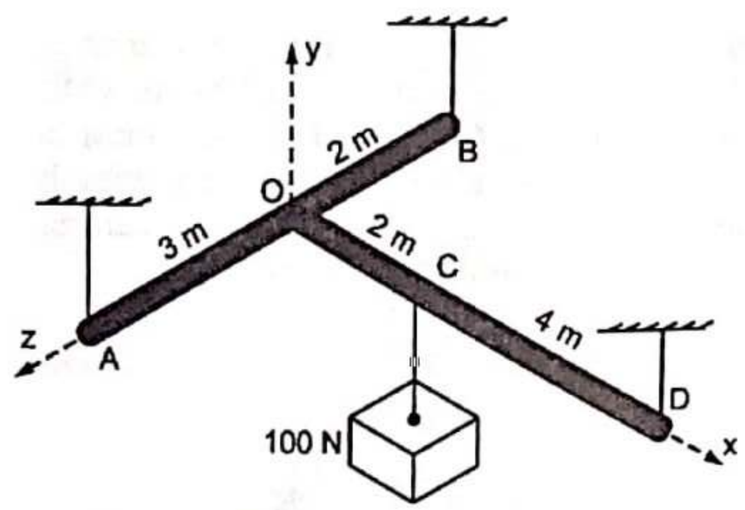

Exercise 7.4

Theory Questions

Q.1 How is a space force represented in magnitude and direction.

Q.2 Discuss the resultant of concurrent forces in space. ***(MU May 15)***

Q.3 Write the equations of equilibrium to be satisfied for non co-planar concurrent force system. ***(SPCE Nov 12)***

Q.4 State conditions of equilibrium for forces in space. ***(MU Dec 17)***

★ ★ ★

Chapter 8

Virtual Work

8.1 Introduction

We have learnt to solve equilibrium problems using Conditions of Equilibrium in Chapter 3. In this chapter we will alternatively use Principle of Virtual Work to solve equilibrium problems. This method has certain advantages, especially for connected bodies where conventionally we require to dismember the system, whereas using Virtual Work method no dismembering of the system is required and the solution is obtained directly.

8.2 Work

a) *Work done by a Force*

i) Consider a force F acting on a block in the direction of displacement. The work done by the force is

$$U = F \times s \qquad \text{..... 8.1}$$

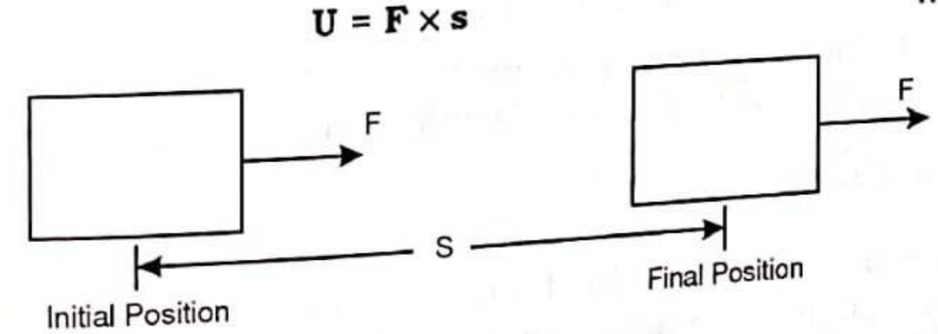

Fig. 8.1

ii) Consider a force F acting on a block inclined at an angle θ to the direction of displacement. The work done by the force is

$$U = F \cos\theta \times s \qquad \text{..... 8.2}$$

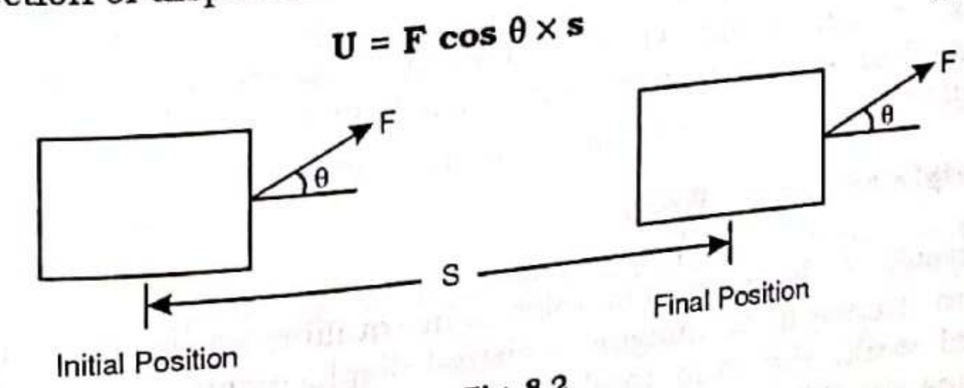

Fig. 8.2

In this case $F \sin\theta$ component of the force does not do work since it is perpendicular to the displacement.

Note: 1) If a force is perpendicular to the displacement, work done is zero.
2) If the force acts opposite to the displacement, work done is negative.

b) *Work done by a Couple*

Consider a rigid body which is free to rotate about hinge at O. Let a couple M be applied to it causing it to rotate by θ radians from initial to final position. The work done by the couple is

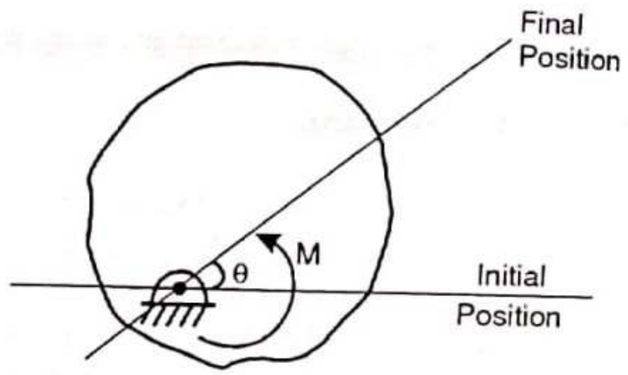

Fig. 8.3

$$U = M \times \theta \quad \text{..... 8.3}$$

Note: If the direction of the couple and the direction of rotation are same the work done is positive and if the directions are opposite, work done is negative.

Units of Work: Work is a scalar quantity. In SI system the unit of work is Joule (J)

1 Joule = 1 N.m

1 Joule is defined as work done by a force of 1 Newton causing a displacement of 1 m in the direction of the force.

8.3 Virtual Work

We have seen the definition of work by force and also work by couple, where the force or couple cause actual linear displacement s or angular displacement θ respectively.

However for a body in equilibrium, though acted upon by number of forces, no linear or angular displacement take place. In such a situation the work done by the system is zero. Hence if we wish to generate the work from a system in equilibrium, we need to assume false displacement of the system. This assumed or virtual displacement, which in reality does not exist, is known as *virtual work*.

8.4 Principle of Virtual Work

If a system of forces and couples is in equilibrium, then the total work is equal to zero. Hence if we imagine a virtual displacement of the system, we generate virtual work, the sum total of the virtual works by the different forces and couples should therefore be zero. Thus the principle of virtual work is stated as

"For a system in equilibrium, if a small virtual displacement is given to the system consistent with the constraints, then the total virtual work done by the system is equal to zero".

It is mathematically expressed as

$$\Sigma\, \delta U = 0 \quad \text{..... 8.4}$$

8.5 Application of Virtual Work to Problems on Mechanism and Frames

Mechanism is a system of connected bodies joined by internal hinges having single or multiple degree of freedom (we shall deal with single degree of freedom problems). Single degree of freedom implies that the equilibrium configuration of the mechanism depends on only one variable.

Procedure for analysis

Step 1: Draw the FBD of the mechanism system.

Step 2: Choose a set of co-ordinate axes taking the origin at some fixed point such that the origin remains stationary when the virtual displacement is given to the system.

Step 3: Fix a variable angle 'θ' which describes the equilibrium configuration.

Step 4: Now give a small virtual displacement to the system such that there is an increase in value of θ by a small amount $\delta\theta$.

Step 5: Identify the active forces in the system which do work.

Step 6: Find the co-ordinates of active forces in terms of variable θ.

Step 7: Differentiate the co-ordinates w.r.t. θ to get virtual displacement.

Step 8: Write the virtual work equation $\Sigma\, \delta U = 0$ using the sign convention stated below
i) If the force acts in the positive direction of the axes it will do positive work, otherwise negative.
ii) If a couple causes an increase in the angle θ it does positive work, otherwise negative.

Step 9: Cancel out $\delta\theta$ from the equation. Now substitute the value of θ to get the unknown.

The following examples should help to understand the procedure explained above.

Ex. 8.1 The frame shown consists of rods AB and BC each of length 2L hinged at B and externally supported as shown. The system at $\theta = 30°$ is in equilibrium by the application of horizontal force P applied at the roller. Using virtual work method, find the value of P.

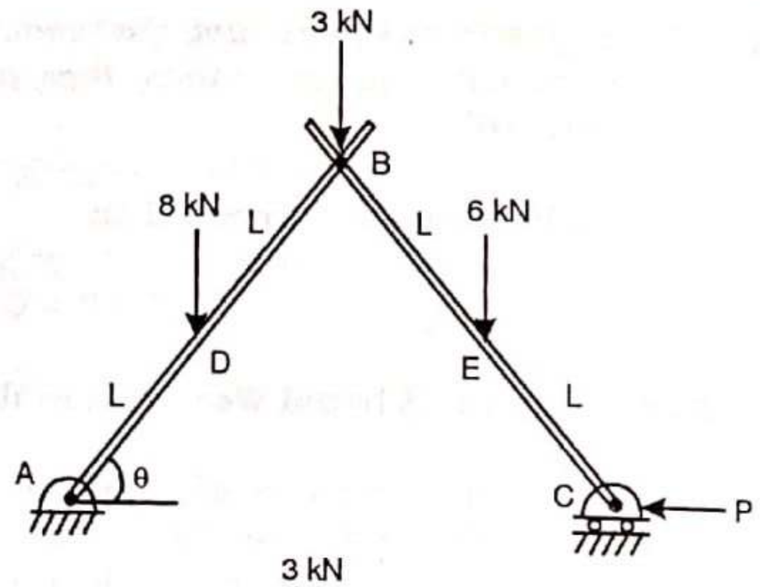

Solution: The FBD of the frame is shown in figure. Let us take the axes with the origin at hinge A. Giving a virtual displacement such that there is an increase in angle θ by δθ as shown dotted in figure. We find forces H_A, V_A and R_C don't do work while forces 8 kN, 3 kN, 6 kN and P are active forces as they do work.

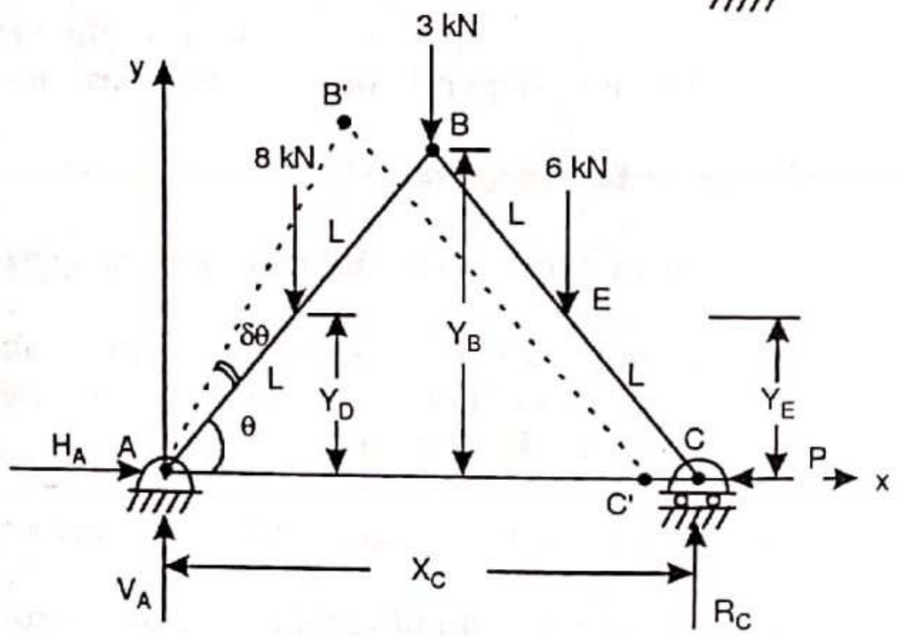

Active Force	Co-ordinate	Virtual Displacement
8 kN	$y_D = L \sin\theta$	$\delta y_D = L \cos\theta\, \delta\theta$
3 kN	$y_B = 2 L \sin\theta$	$\delta y_B = 2 L \cos\theta \delta\theta$
6 kN	$y_E = L \sin\theta$	$\delta y_E = L \cos\theta\, \delta\theta$
P	$x_C = 4 L \cos\theta$	$\delta x_C = -4 L \sin\theta\, \delta\theta$

Using $\Sigma\, \delta U = 0$

$$-8 \times \delta y_D - 3 \times \delta y_B - 6 \times \delta y_E - P \times \delta x_C = 0$$

$$-8 \times L \cos\theta\, \delta\theta - 3 \times 2 L \cos\theta\, \delta\theta - 6 \times L \cos\theta\, \delta\theta - P \times -4 L \sin\theta\, \delta\theta = 0$$

Cancel out L and δθ and substitute $\theta = 30°$

$$-8 \cos 30 - 6 \cos 30 - 6 \cos 30 + 4 P \sin 30 = 0$$

$$\therefore \quad P = 8.66 \text{ kN}$$ ..... **Ans.**

Ex. 8.2 A mechanism shown consists of three identical bars AB, BC and CD = 2 m. At $\theta = 25°$ a force of 10 kN is applied at B. A force Q is to be applied at C, directed at A as to maintain equilibrium of the configuration. Calculate force Q using principle of virtual work.

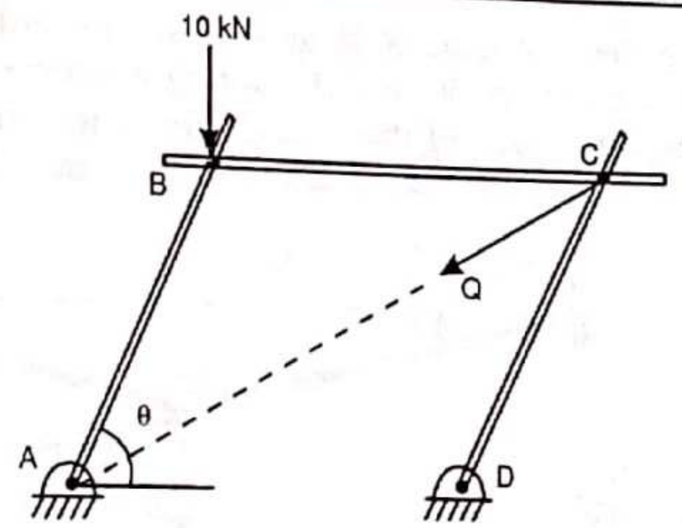

Solution: Draw the FBD taking the origin at the hinge A. Let us give a virtual displacement of δθ as shown in figure

The force Q is resolved into components as shown. On giving virtual displacement we find forces H_A, V_A, H_D and V_D don't do work. Components of force Q and 10 kN are active forces.

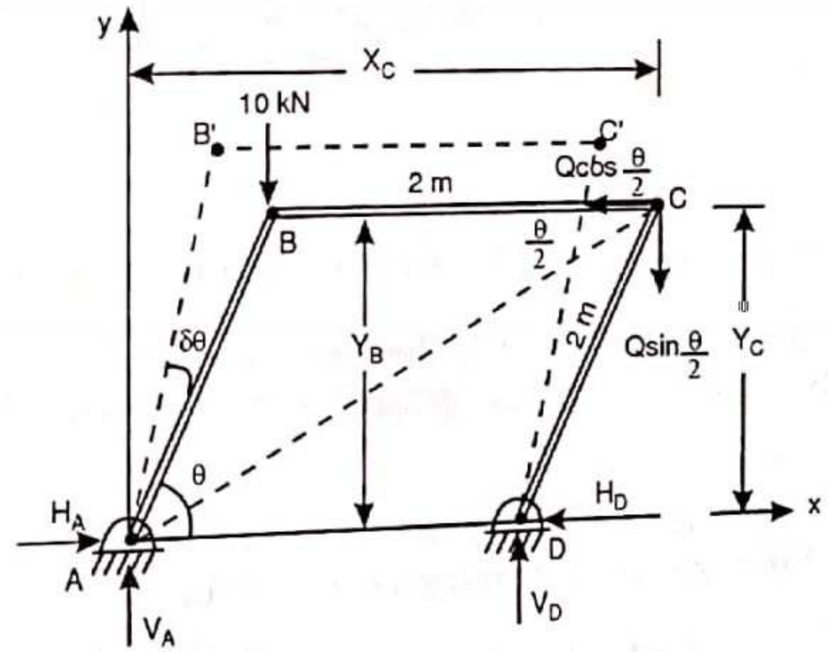

Active Force	Co-ordinate	Virtual Displacement
10 kN	$y_B = 2 \sin\theta$	$\delta y_B = 2 \cos\theta\, \delta\theta$
$Q \cos(\theta/2)$	$x_C = 2 + 2 \cos\theta$	$\delta x_C = -2 \sin\theta\, \delta\theta$
$Q \sin(\theta/2)$	$y_C = 2 \sin\theta$	$\delta y_C = 2 \cos\theta\, \delta\theta$

Using $\Sigma\, \delta U = 0$

$$-10 \times \delta y_B - Q \cos\frac{\theta}{2} \times \delta x_C - Q \sin\frac{\theta}{2} \times \delta y_C = 0$$

$$-10 \times 2 \cos\delta\theta - Q \cos\frac{\theta}{2} \times (-2 \sin\theta\, \delta\theta) - Q \sin\frac{\theta}{2} \times 2 \cos\theta\, \delta\theta = 0$$

cancel out δθ and substitute $\theta = 25°$

$$-20 \cos 25 + Q \cos 12.5 \times 2 \sin 25 - Q \sin 12.5 \times 2 \cos 25 = 0$$

$$\therefore \quad Q = 41.87 \text{ kN}$$ ..... **Ans.**

Ex. 8.3 A vertical load W is applied to the linkage at B as shown in figure (a). The constant of spring is k and the spring is unstretched when AB and BC are horizontal. Neglecting the weight of the linkage, find the equation in θ, W and L and k which must be satisfied when the linkage is in equilibrium. Use virtual work method.

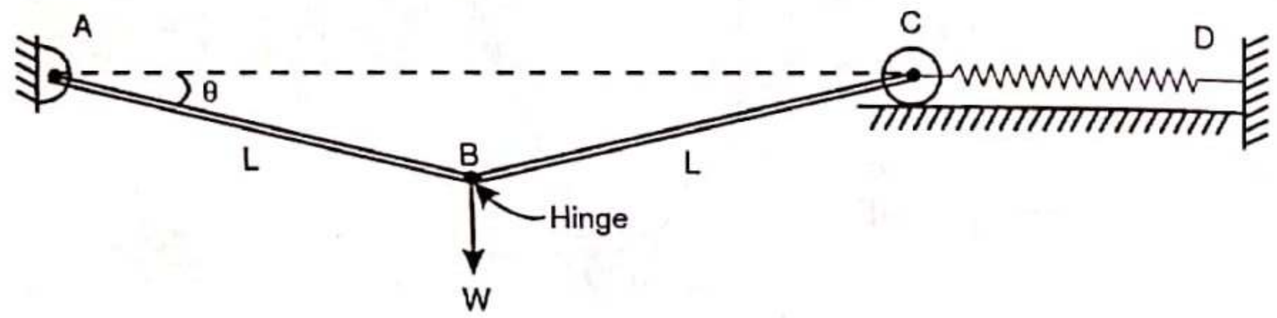

Solution:

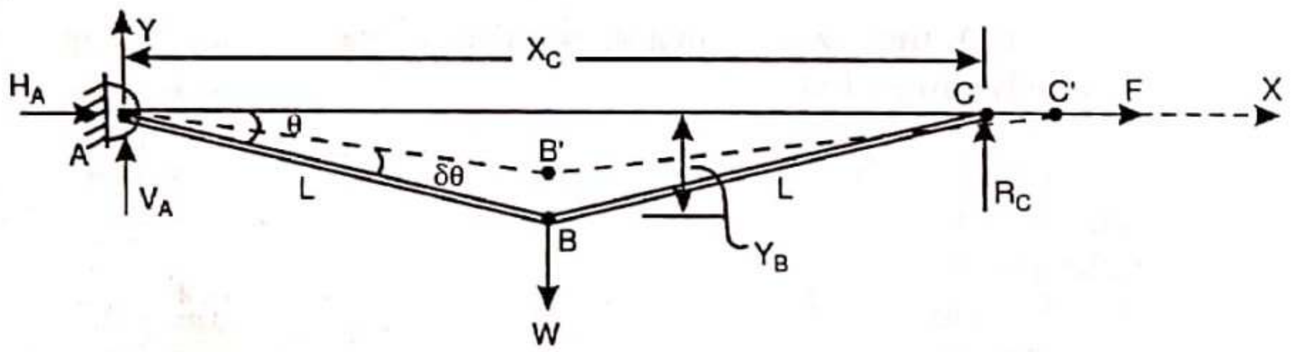

Taking the origin at A. Let us give a virtual displacement of δθ as shown in figure by dotted lines.

We find forces H_A, V_A and R_C don't do work.

We also know that force in spring F is proportional to its deformation x

i.e. $F = k \times x$

since the initial length AC = 2L becomes AC′ = 2L cos θ

∴ the extension of spring x = 2L – 2L cos θ

∴ $F = k\,(2L - 2L\cos\theta)$

$F = 2\,k\,L\,(1 - \cos\theta)$

Active force	Co-ordinate	Virtual Displacement
W	$y_B = -L\sin\theta$	$\delta y_B = -L\cos\theta\,\delta\theta$
F	$x_C = 2L\cos\theta$	$\delta x_C = -2L\sin\theta\,\delta\theta$

Using $\Sigma\,\delta U = 0$

$-W\,\delta y_B + F \times \delta x_C = 0$

$-W \times (-L\cos\theta\,\delta\theta) + 2\,k\,L\,(1 - \cos\theta) \times (-2L\sin\theta\,\delta\theta) = 0$

cancel out δθ and L

$W\cos\theta - 4\,k\,L\sin\theta\,(1 - \cos\theta) = 0$

or $W = 4\,k\,L\tan\theta\,(1 - \cos\theta)$ .....**Ans.**

Ex. 8.4 A two body mechanism formed by members AC and BC both length L = 0.6 m are acted upon by forces and couples as shown. The equilibrium of the mechanism is maintained by the horizontal force P at θ = 60°. Using virtual work method find the force P.

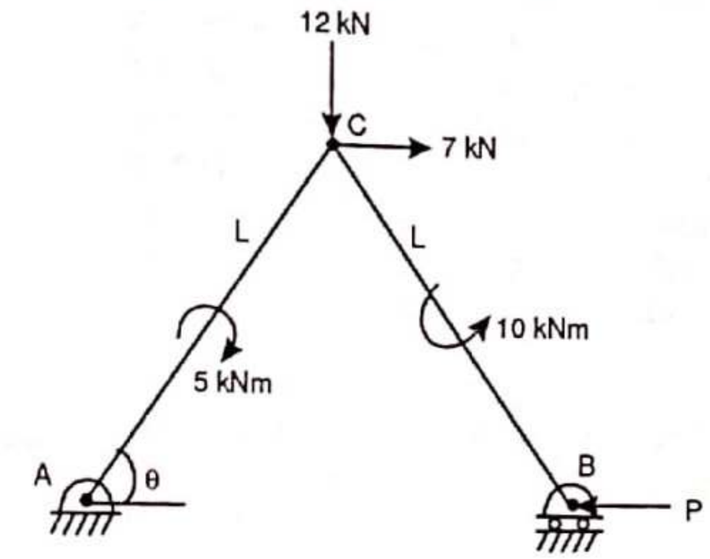

Solution: Draw the F.B.D taking the origin at the hinge A. Let θ be the variable angle as shown.

Let us give a virtual displacement of δθ as shown by dotted lines.

We also find forces H_A, V_A and R_B don't do work.

We also find that forces 12 kN, 7 kN and P are active forces. Also couples of 5 kNm and 10 kNm are active since they do work.

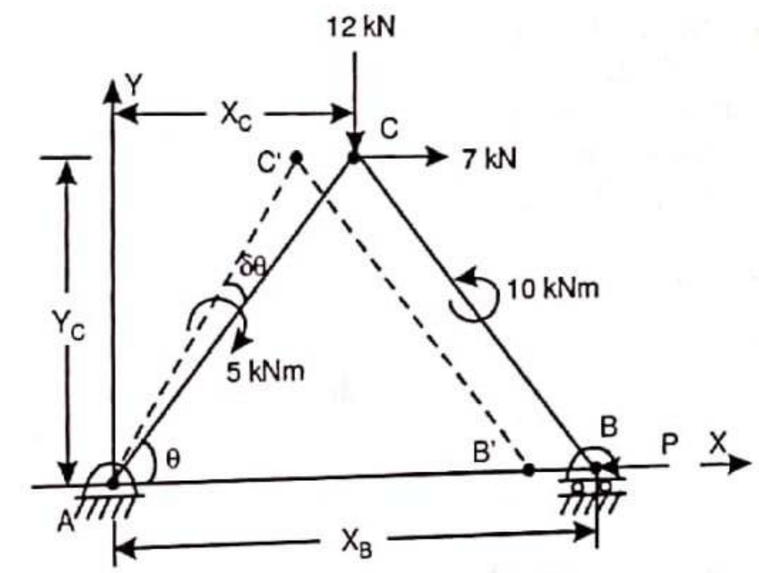

Active Force	Co-ordinate	Virtual Displacement
12 kN	$y_C = 0.6\sin\theta$	$\delta y_C = 0.6\cos\theta\,\delta\theta$
7 kN	$x_C = 0.6\cos\theta$	$\delta y_B = -0.6\sin\theta\,\delta\theta$
P	$x_B = 1.2\cos\theta$	$\delta y_E = -1.2\sin\theta\,\delta\theta$

Also the couples of 5 kNm and 10 kNm do negative work, since they tend to cause a decrease of angle θ.

Using $\Sigma\,\delta U = 0$

$-5\,\delta\theta - 10\,\delta\theta - 12\,\delta y_C + 7\,\delta x_C - P\,\delta x_B = 0$

$-5\,\delta\theta - 10\,\delta\theta - 12\,[\,0.6\cos\theta\,\delta\theta\,] + 7\,[-0.6\sin\theta\,\delta\theta\,] - P\,[-1.2\sin\theta\,\delta\theta\,] = 0$

cancel out δθ and substitute θ = 60°

$-5 - 10 - 7.2\cos 60 - 4.2\sin 60 + 1.2\,P\sin 60 = 0$ ..... **Ans.**

∴ P = 21.4 kN

Ex. 8.5 A three bar mechanism is shown, determine the angle θ at equilibrium, given P = 5 N. The spring is un-stretched when θ = 0 and always maintains a horizontal position because of the roller which travels in the smooth vertical slot.

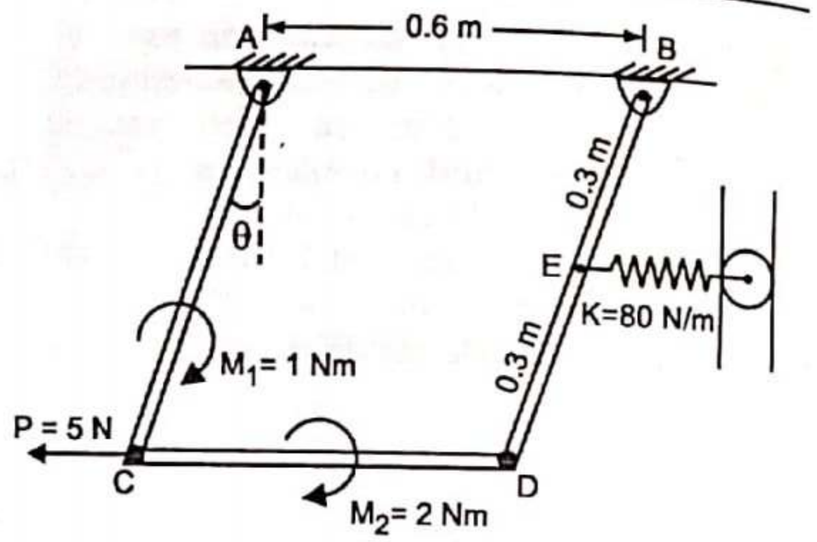

Solution: The F.B.D of the mechanism is shown. Let us take the axes with origin at the hinge B. Giving a virtual displacement such that there is an increase in the angle θ by δθ as shown by dotted lines.

We find forces H_A, V_A , H_B and V_B are non-active forces while P = 5 N and spring force F are active forces.

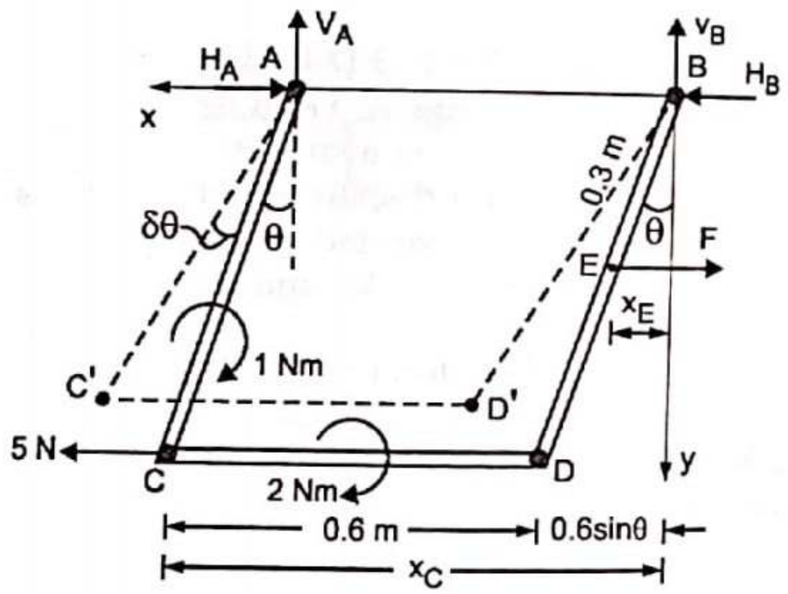

Work by moment M_1 = 1 Nm.

Moment M_1 does work because rod AC on which it acts rotates. It does positive work because its clockwise rotation is consistent with the clockwise rotation of the rod.

Work by moment M_2 = 2 Nm

Moment M_2 does not do work because rod BD on which it acts does not rotate during virtual displacement.

Active Force	Co-ordinate	Virtual Displacement
5 N	$x_C = 0.6 + 0.6\sin\theta$	$\delta x_C = 0.6\cos\theta\ \delta\theta$
F	$x_E = 0.3\sin\theta$	$\delta x_E = 0.3\cos\theta\ \delta\theta$

Using $\Sigma\delta U = 0$

$$5\times\delta x_C - F\times\delta x_E + 1\times\delta\theta = 0$$

$$5\times 0.6\cos\theta\ \delta\theta - 24\sin\theta\times 0.3\cos\theta\ \delta\theta + 1\times\delta\theta = 0$$

Spring force

$$F = k\,x = 80\times 0.3\sin\theta = 24\sin\theta$$

Cancel out δθ, we get

$$3\cos\theta - 7.2\sin\theta\cos\theta + 1 = 0$$

$$3.6\sin 2\theta - 3\cos\theta = 1$$

Solving by tial and error, we get $\theta = 36°$ ..... **Ans.**

Ex. 8.6 A 150 N uniform ladder 4 m long supports a 500 N weight person at its top. Assuming the wall to be smooth, find the frictional force which should be generated at the bottom rough surface to prevent the ladder from slipping. Use virtual work method only.

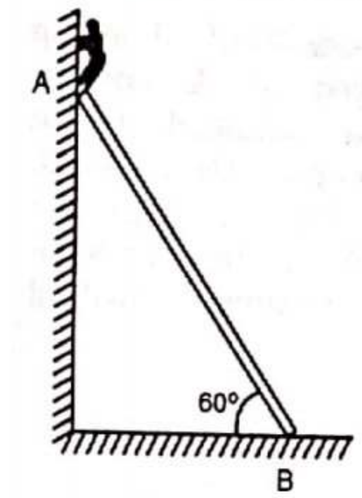

Solution: The F.B.D of the ladder is shown.

Let F be the frictional force which should be generated at the bottom rough surface for equilibrium.

Taking the co-ordinate axes, origin and variable angle θ as shown in figure.

Let us give a virtual displacement as shown by dotted lines.

We find forces R_A, R_B are non-active forces while 150 N, 500 N and F are active forces.

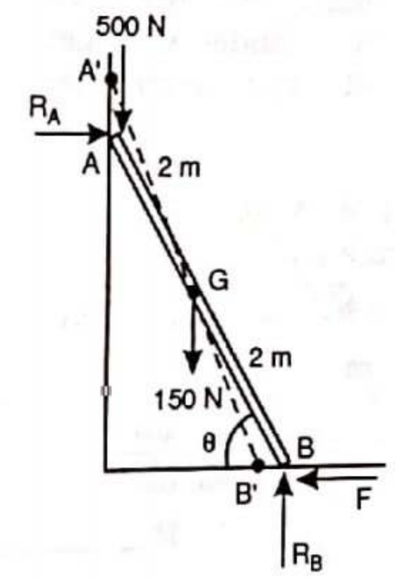

Active Force	Co-ordinate	Virtual Displacement
150 kN	$y_G = 2\sin\theta$	$\delta y_G = 2\cos\theta\ \delta\theta$
500 kN	$y_A = 4\sin\theta$	$\delta y_A = 4\cos\theta\ \delta\theta$
F	$x_B = 4\cos\theta$	$\delta x_B = -4\sin\theta\ \delta\theta$

Using $\Sigma\,\delta U = 0$

$$-150\,\delta y_G - 500\,\delta y_A - F\,\delta x_B = 0$$

$$-150\,(2\cos\theta\ \delta\theta) - 500\,(4\cos\theta\ \delta\theta) - F\,(-4\sin\theta\ \delta\theta) = 0$$

cancel out δθ and substitute θ = 60°

$$-300\cos 60 - 2000\cos 60 + 4F\sin 60 = 0$$

$$\therefore \quad F = 331.97\ \text{N}$$ ..... **Ans.**

Ex. 8.7 The boom AB of a hoisting crane is hinged at A and is supported and adjusted by a hydraulic cylinder CD pinned at D. At a position θ = 30°, determine the force developed in the hydraulic cylinder while hoisting a load of 8000 N.

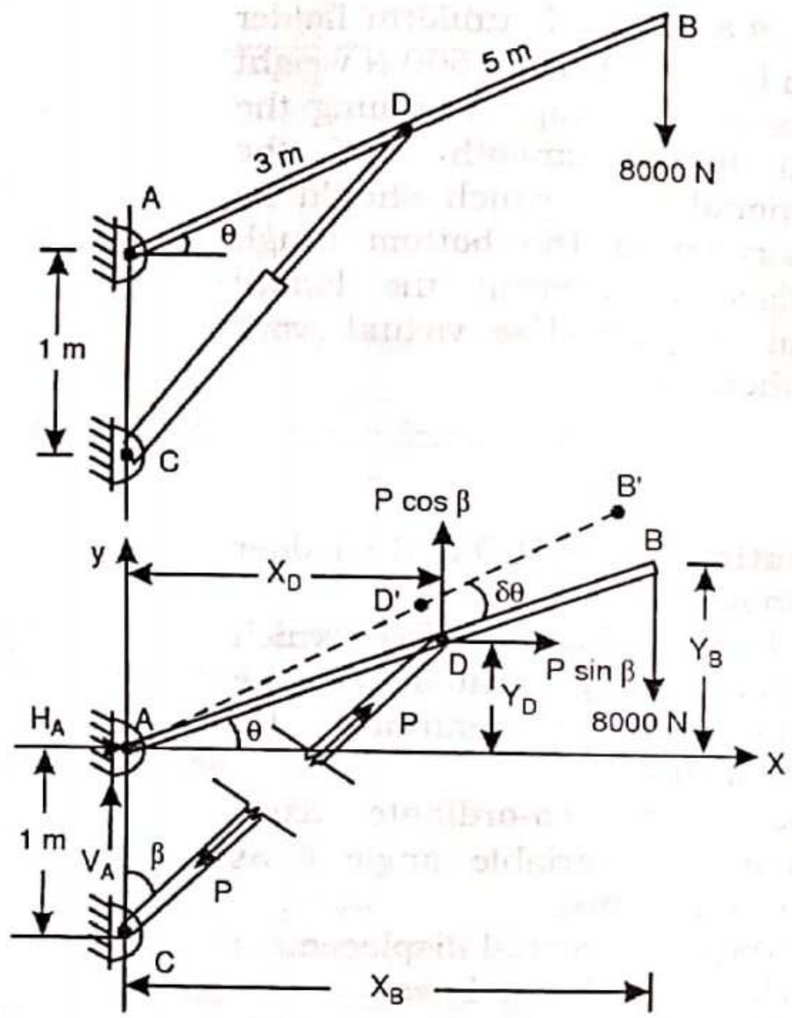

Solution: Cutting member CD.

Let P be the magnitude of the force in the hydraulic cylinder CD. Let the nature of the force be compressive.

From geometry of Δ ACD
Using cosine rule L (CD)

$$= \sqrt{3^2 + 1^2 - 2 \times 3 \times 1 \cos 120}$$
$$= 3.605 \text{ m}$$

Using sine rule $\dfrac{3}{\sin\beta} = \dfrac{3.605}{\sin 120}$

$$\therefore \quad \beta = 46.1°$$

Taking the coordinate axes as shown with the origin at hinge A.

Let θ be the variable angle as shown in figure. Let us give a virtual displacement as shown by dotted lines.

Force H_A and V_A are non active forces, while forces P and 8000 N are active forces. Resolving P into components P cos β and P sin β.

Active Force	Co-ordinate	Virtual Displacement
8000 N	$y_B = 8 \sin\theta$	$\delta y_B = 8 \cos\theta\, \delta\theta$
P cos β	$y_D = 3 \sin\theta$	$\delta y_D = 3 \cos\theta\, \delta\theta$
P sin β.	$x_D = 3 \cos\theta$	$\delta x_D = -3 \sin\theta\, \delta\theta$

Using $\Sigma\, \delta U = 0$

$$-8000.\delta y_B + P\cos\beta.\delta y_D + P\sin\beta.\delta x_D = 0$$
$$-\ 8000.(8\cos\theta\,\delta\theta) + P\cos\beta.(3\cos\theta\,\delta\theta) + P\sin\beta\,(-3\sin\theta\,\delta\theta) = 0$$

Canceling out δθ and substituting θ = 30°, β = 46.1°, we get

P = 76907 N (compressive) ..... **Ans.**

Ex. 8.8 The pin jointed frame of a roof truss supports a 15 kN load at joint B. Find the horizontal force exerted at pin C when θ = 42°.

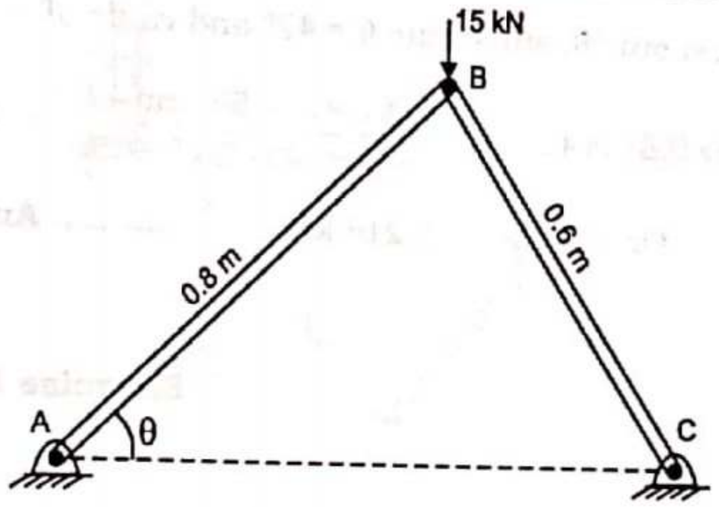

Solution: The F.B.D of the frame is shown. Let us take the coordinate axes with origin at the hinge A.
Giving a virtual displacement such that there is an increase in the angle θ by a small amount δθ as shown by dotted lines.
We find forces 15 kN and H_C are active forces while forces H_A, V_A and V_C are non-active forces.

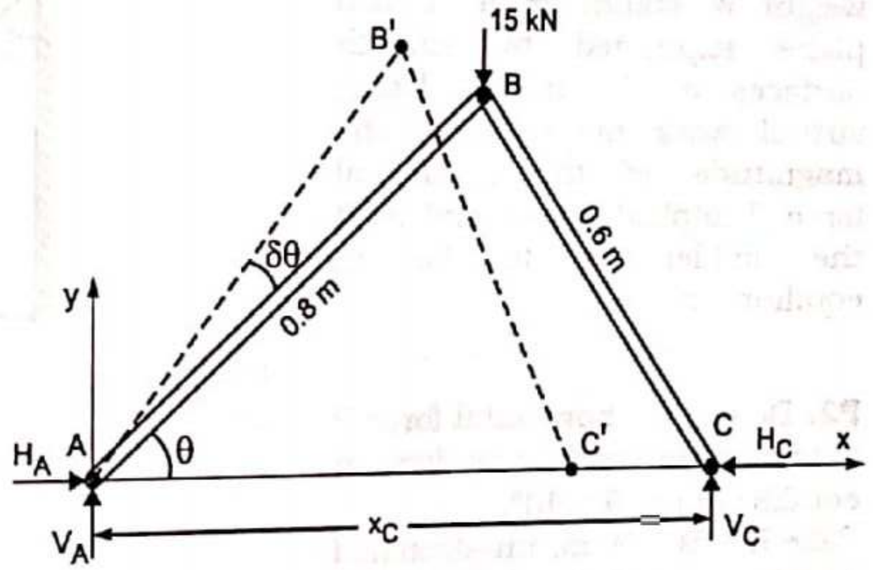

Note: from cosine rule to Δ ABC

$$0.6^2 = 0.8^2 + x_C^2 - 2 \times 0.8 \times x_C \cos\theta \quad \ldots (1)$$

Differentiating w.r.t θ

$$0 = 0 + 2x_C \times \frac{\delta x_C}{\delta\theta} - 1.6\left[\cos\theta \times \frac{\delta x_C}{\delta\theta} - x_C \sin\theta\right]$$

$$\therefore\ 0 = [2x_C - 1.6\cos\theta]\frac{\delta x_C}{\delta\theta} + 1.6x_C \sin\theta$$

$$\text{Or}\quad \delta x_C = \frac{1.6x_C \sin\theta}{1.6\cos\theta - 2x_C} \times \delta\theta \quad \ldots\ldots\ldots (2)$$

Active Force	Co-ordinate	Virtual Displacement
15 kN	$y_B = 0.8 \sin\theta$	$\delta y_B = 0.8 \cos\theta\, \delta\theta$
H_C	x_C	$\delta x_C = \dfrac{1.6x_C \sin\theta}{1.6\cos\theta - 2x_C} \times \delta\theta$

Using $\Sigma\, \delta U = 0$

$$-15 \times \delta y_B - H_C \times \delta x_C = 0$$

$$-15 \times 0.8\cos\theta\,\delta\theta - H_C \times \frac{1.6x_C \sin\theta}{1.6\cos\theta - 2x_C} \times \delta\theta = 0$$

Substitute θ = 42° in eq. (1)

$$0.6^2 = 0.8^2 + x_C^2 - 2 \times 0.8 \times x_C \times \cos 42$$
$$x_C^2 - 1.189x_C + 0.28 = 0$$
$$\text{or} \quad x_C = 0.8655 \text{ m}$$

Cancel out $\delta\theta$, substitute $\theta = 42°$ and value of x_C, we get

$$-15\times0.8\cos 42 - H_C\times\frac{1.6\times0.8655\times\sin 42}{1.6\cos 42-2\times0.8655} = 0$$

Or $H_C = 5.216$ kN ..... **Ans.**

Exercise 8.1

P1. A ladder of length L and weight W stands in a vertical plane supported by smooth surfaces at A and B. Using virtual work method find the magnitude of the horizontal force P applied at the end A, if the ladder is to be in equilibrium.

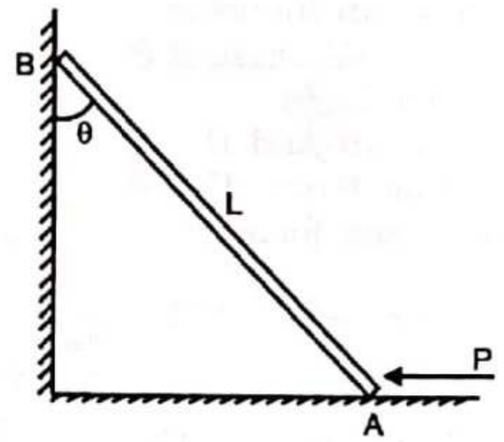

P2. Determine horizontal force P acting on the mechanism kept in equilibrium at $\theta = 40°$.
Take K = 500 N/m, un-stretched length of spring = 1 m and length of rod L = 1.5 m.

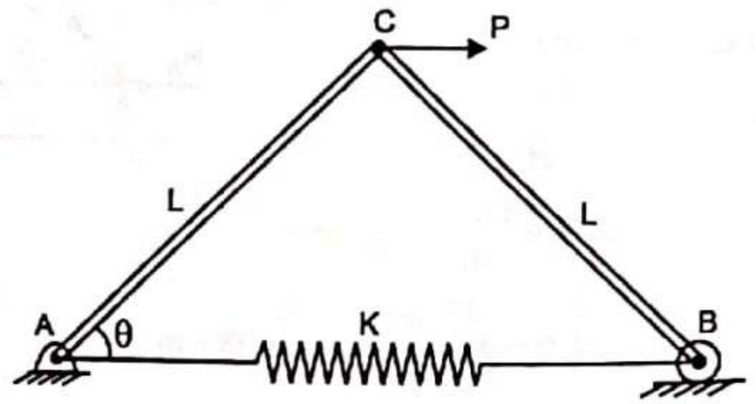

P3. For the mechanism shown find the couple M require to maintain equilibrium. Take a = 0.5 m and $\theta = 60°$.

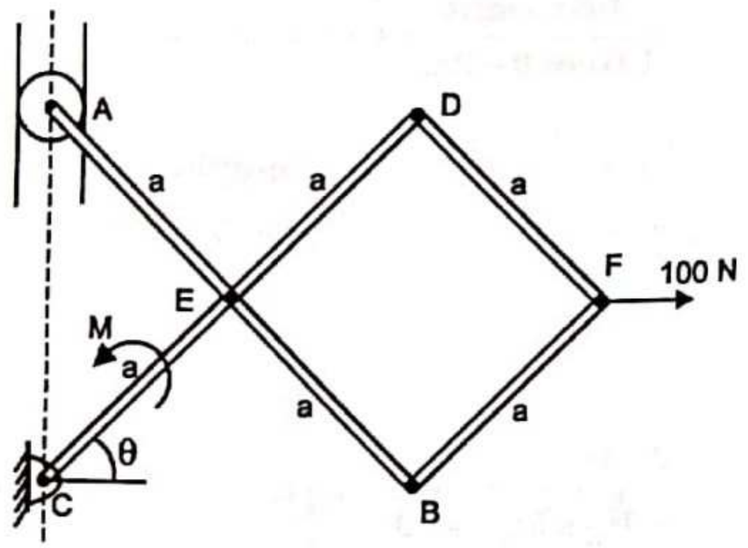

P4. The pin connected mechanism, is constrained at A by a pin and at B by a smooth sliding block as shown in figure. If P = 2 kN and a = 0.5 m, determine the angle θ for equilibrium.
(VJTI Nov 16)

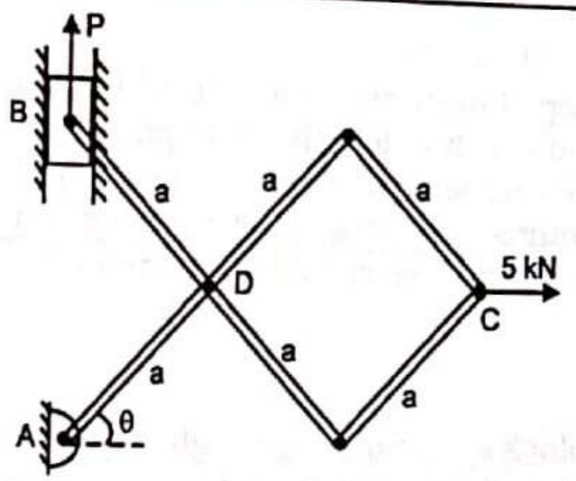

P5. Using virtual work method, determine the value of force P to keep the loaded link mechanism in equilibrium.

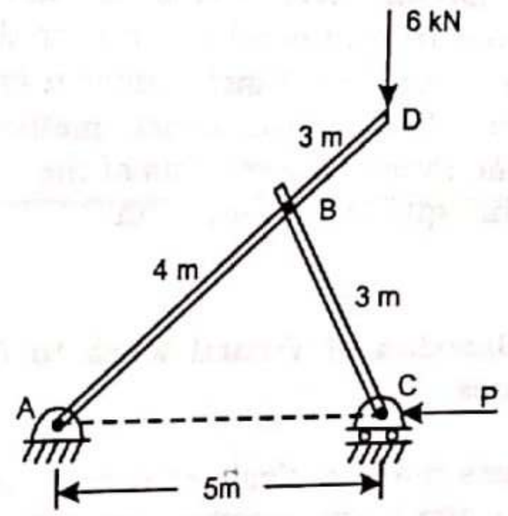

P6. A pinconnected mechanism is shown. For $\theta = 30°$ find the horizontal force P required to maintain the equilibrium of the mechanism.
(VJTI Apr 17)

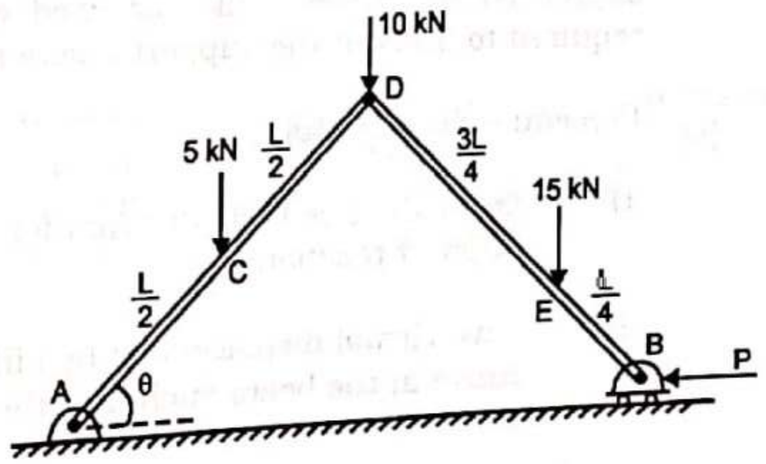

P7. A rope connects two members of a mechanism shown. Determine the tension in the rope using virtual work method.

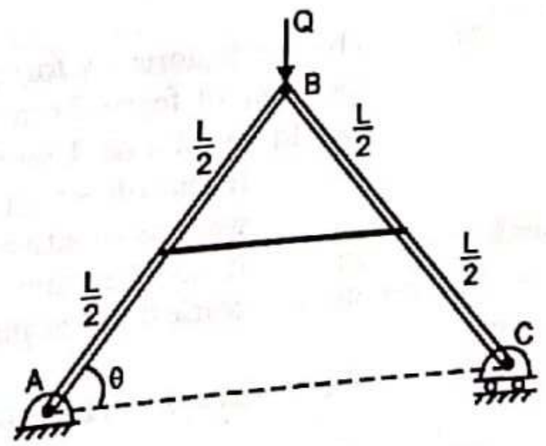

P8. A X shaped mechanism is formed by two identical rods each of length L and pinned at their centres as shown. Find the horizontal force P required to be applied to maintain the configuration. Use virtual work method.

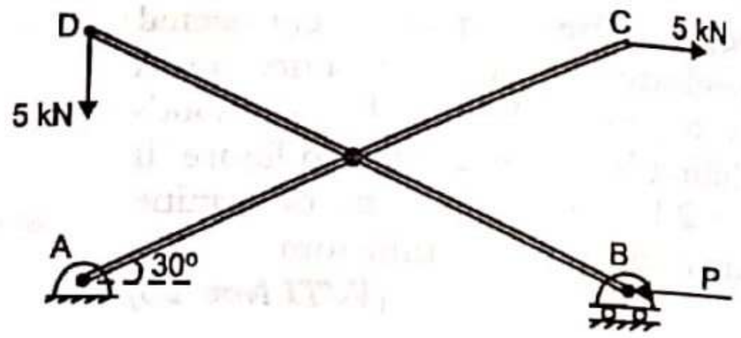

P9. Two blocks A and B of weight W_A and W_B respectively are connected to each other by a string passing over a smooth pulley. The blocks are held in equilibrium over the smooth planes inclined at inclinations α and β as shown. Using virtual work method, determine the ratio of the weights of the two blocks for the equilibrium condition

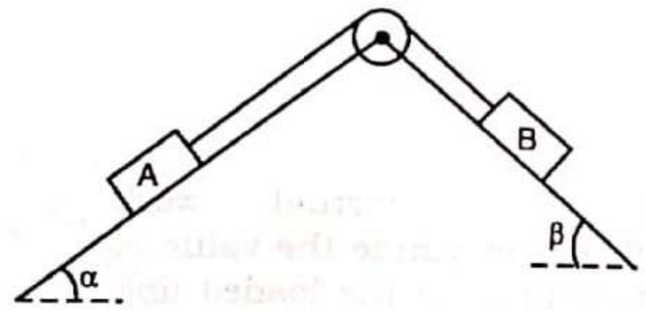

8.6 Application of Virtual Work to Problems on Beams with/without Internal Hinges

Beams may be single 'of connected. Beams with internal hinges contain more than one beam length, internally connected by internal hinges and externally supported by hinges, roller or fixed end support. In these problems we are required to find out the support reactions for the loaded beam.

Procedure for analysis

1) Draw the free body diagram for the given system showing the forces and support reactions.

2) Give virtual displacement by lifting either the end of the beam or internal hinge in the beam such that the beam rotates by δθ. Sketch the deflected position.

3) The work done by force would be equal to the F × (r δθ) where r is the location of force from the center of rotation. The work done by couple would be M × δθ. Use proper sign for the work done which is
   i) If the direction of force and direction of displacement are same, work is positive, otherwise negative.
   ii) If the direction of couple and the direction of rotation are same, work done is positive, otherwise negative.

4) Write virtual work equation $\Sigma\, \delta U = 0$

5) Cancel out δθ from the equation to get the unknown reaction.

Ex. 8.9 Determine the support reactions at A and D for the beam shown by virtual work method.

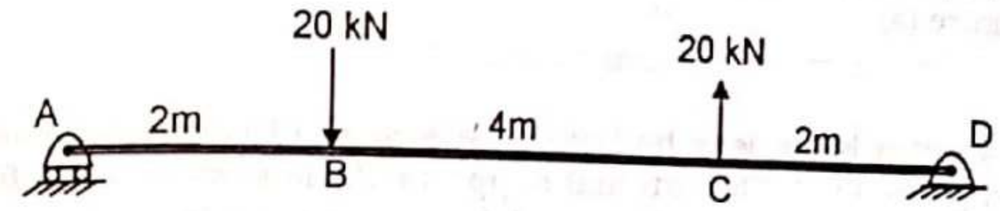

Solution:

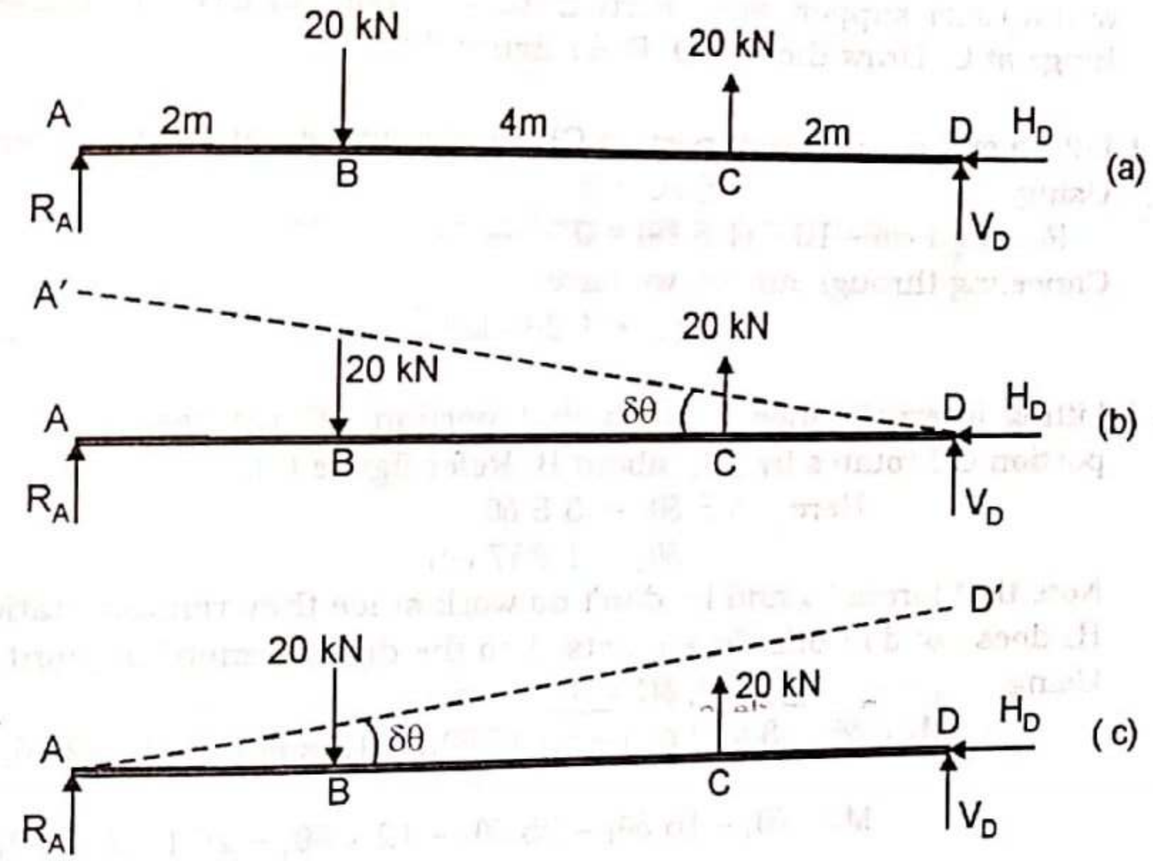

Step 1: The beam is a simple beam consisting of only one portion AD. The beam is externally supported by a hinge at D and a roller at A. The FBD is shown in figure (a).

Step 2: Lifting end A, such that beam AD rotates by δθ about D. Refer figure (b).

Note that forces H_D and V_D don't do any work since they remain stationary.

Using $\Sigma\, \delta U = 0$

$$R_A \times (8\,\delta\theta) - 20 \times (6\,\delta\theta) + 20 \times (2\,\delta\theta) = 0$$

Cancelling throughout δθ, we have

$R_A = 10$ kN Or $R_A = 10$ kN ↑ ..... **Ans.**

Step 3: Lifting end D, such that beam AD rotates by δθ about A. Refer figure (c).

Note that force R_A does not do work since it remains stationary. Also force H_D does not do work since it acts perpendicular to the displacement of point D.

Using $\Sigma\, \delta U = 0$

$$-20 \times (2\,\delta\theta) + 20 \times (6\,\delta\theta) + V_D \times (8\,\delta\theta) = 0$$

Cancelling throughout δθ, we have

$V_D = -10$ kN Or $V_D = 10$ kN ↓ ..... **Ans.**

Step 4: Since there is no horizontal force or horizontal component of any force, the reaction $H_D = 0$. ..... **Ans.**

Ex. 8.10 Using principle of virtual work find reactions at supports. C is an internal hinge. Refer figure (a).

Solution:

Step 1: There are two beam lengths forming a system of connected bodies, viz. Portion AC and portion CB. The external supports of the system are a fixed support at A and a roller support at B. Portion AC and portion CB are connected by internal hinge at C. Draw the F.B.D. Refer figure (b).

Step 2: Lifting end B, such that portion CB rotates by $\delta\theta$ about C. Refer figure (c).

Using $\Sigma\, \delta U = 0$

$$R_B \times (3.5\, \delta\theta) - 10 \times (1.5\, \delta\theta) = 0$$

Canceling throughout $\delta\theta$, we have

$$R_B = 4.286 \text{ kN} \uparrow \qquad \text{..... Ans.}$$

Step 3: Lifting internal hinge C, such that portion AC rotates by $\delta\theta_1$ about A and portion CB rotates by $\delta\theta_2$ about B. Refer figure (d).

Here $6.5\, \delta\theta_1 = 3.5\, \delta\theta_2$

$\therefore \quad \delta\theta_2 = 1.857\, \delta\theta_1$

Note that forces V_A and R_B don't do work since they remain stationary. Also force H_A does not do work since it acts $\perp$ to the displacement of point A.

Using $\Sigma\, \delta U = 0$

$$M_A \times \delta\theta_1 - 8 \times (2\, \delta\theta_1) - 5 \times (5\, \delta\theta_1) - 12 \times \delta\theta_1 - 10 \times (2\, \delta\theta_2) = 0$$

$$M_A \times \delta\theta_1 - 16\, \delta\theta_1 - 25\, \delta\theta_1 - 12 \times \delta\theta_1 - 20\, (1.857\, \delta\theta_1) = 0$$

Canceling throughout $\delta\theta_1$, we have

$\therefore \quad M_A = 90.14$ kNm

$M_A = 90.14$ kNm ↺ ..... **Ans.**

Note that M_A does positive work because its direction and the direction of rotation are same, while 12 kNm couple acts in clockwise direction and the rotation of the portion AC is anti-clockwise, so it does negative work.

Step 4: Lifting end A, such that portion AC rotates by $\delta\theta$ about C. Refer figure (e).

Note that force H_A being $\perp$ to the displacement does not do work. Couple M_A acts in anti-clockwise direction while portion AC rotates clockwise, so M_A does negative work. Direction of 12 kNm couple and rotation of AC are both clockwise therefore 12 kNm couple does positive work.

Using $\Sigma\, \delta U = 0$

$$V_A \times (6.5\, \delta\theta) - 90.14 \times \delta\theta - 8 \times (4.5\, \delta\theta) - 5 \times (1.5\, \delta\theta) + 12 \times \delta\theta = 0$$

Canceling throughout $\delta\theta$, we have

$$V_A = 18.71 \text{ kN} \uparrow \qquad \text{..... Ans.}$$

Step 5: Since there is no horizontal force or horizontal component of any force, the reaction $H_A = 0$ ..... **Ans.**

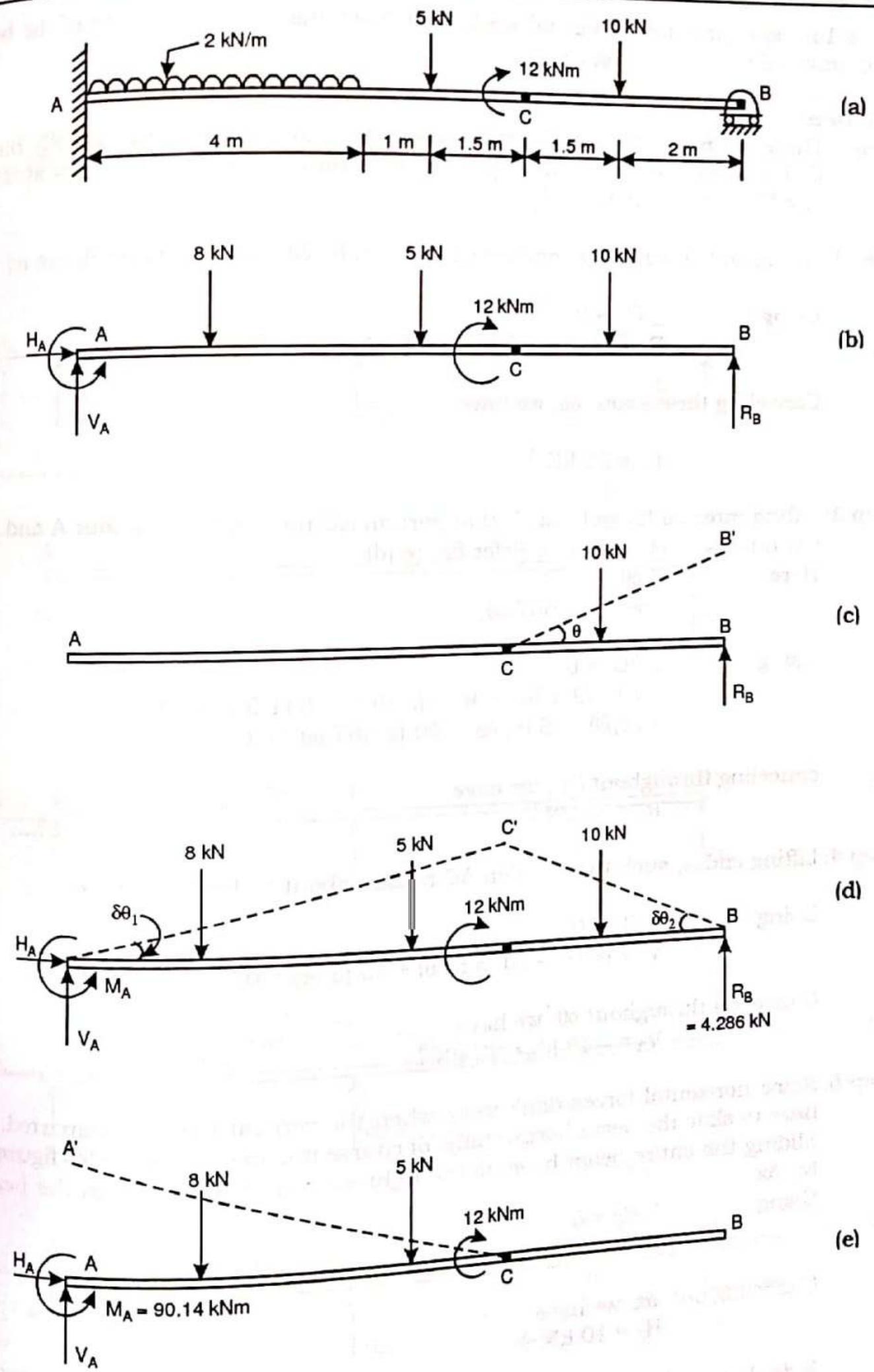

Ex. 8.11 Using principle of virtual work, find reactions at the supports of the beam. C is an internal hinge. Refer figure (a).

Solution:

Step 1: There are two beam lengths viz. Portion AC and portion CD internally hinged at C. The system is externally supported by a hinge at A and by rollers at B and D. The FBD is shown in figure (b).

Step 2: Lifting end D, such that portion CD rotates by $\delta\theta$ about C. Refer figure (c).

Using $\Sigma\, \delta U = 0$

$R_D \times (3\,\delta\theta) - 60\,(1.5\,\delta\theta) = 0$

Canceling throughout $\delta\theta$, we have

$R_D = 30$ kN ↑ ..... **Ans.**

Step 3: Lifting internal hinge C, such that portion AC rotates by $\delta\theta_1$ about A and portion CD rotates by $\delta\theta_2$ about D. Refer figure (d).

Here $8\,\delta\theta_1 = 3\,\delta\theta_2$

$\therefore$ $\delta\theta_2 = 2.667\,\delta\theta_1$

Using $\Sigma\, \delta U = 0$

$-10 \times (2.5\,\delta\theta_1) + R_B \times (5\,\delta\theta_1) - 60\,(1.5\,\delta\theta_2) = 0$

$-25\,\delta\theta_1 + 5\,R_B\,\delta\theta_1 - 90\,(2.667\,\delta\theta_1) = 0$

canceling throughout $\delta\theta_1$, we have

$R_B = 53$ kN ↑ ..... **Ans.**

Step 4: Lifting end A, such that portion AC rotates about C. Refer figure (e).

Using $\Sigma\, \delta U = 0$

$V_A \times (8\,\delta\theta) - 10\,(5.5\,\delta\theta) + 53\,(3\,\delta\theta) = 0$

Canceling throughout $\delta\theta$, we have

$V_A = -13$ kN $= 13$ kN ↓ ..... **Ans.**

Step 5: Since horizontal forces don't work when the vertical lifting is imparted, we will have to slide the beam horizontally, of course it being virtual. Refer figure (f). Sliding the entire beam by δx to the right such that all points on the beam shift by δx

Using $\Sigma\, \delta U = 0$

$H_A \times \delta x - 10 \times \delta x = 0$

Canceling out δx, we have

$H_A = 10$ kN → ..... **Ans.**

Note that vertical forces being ⊥ to the displacement don't do work.

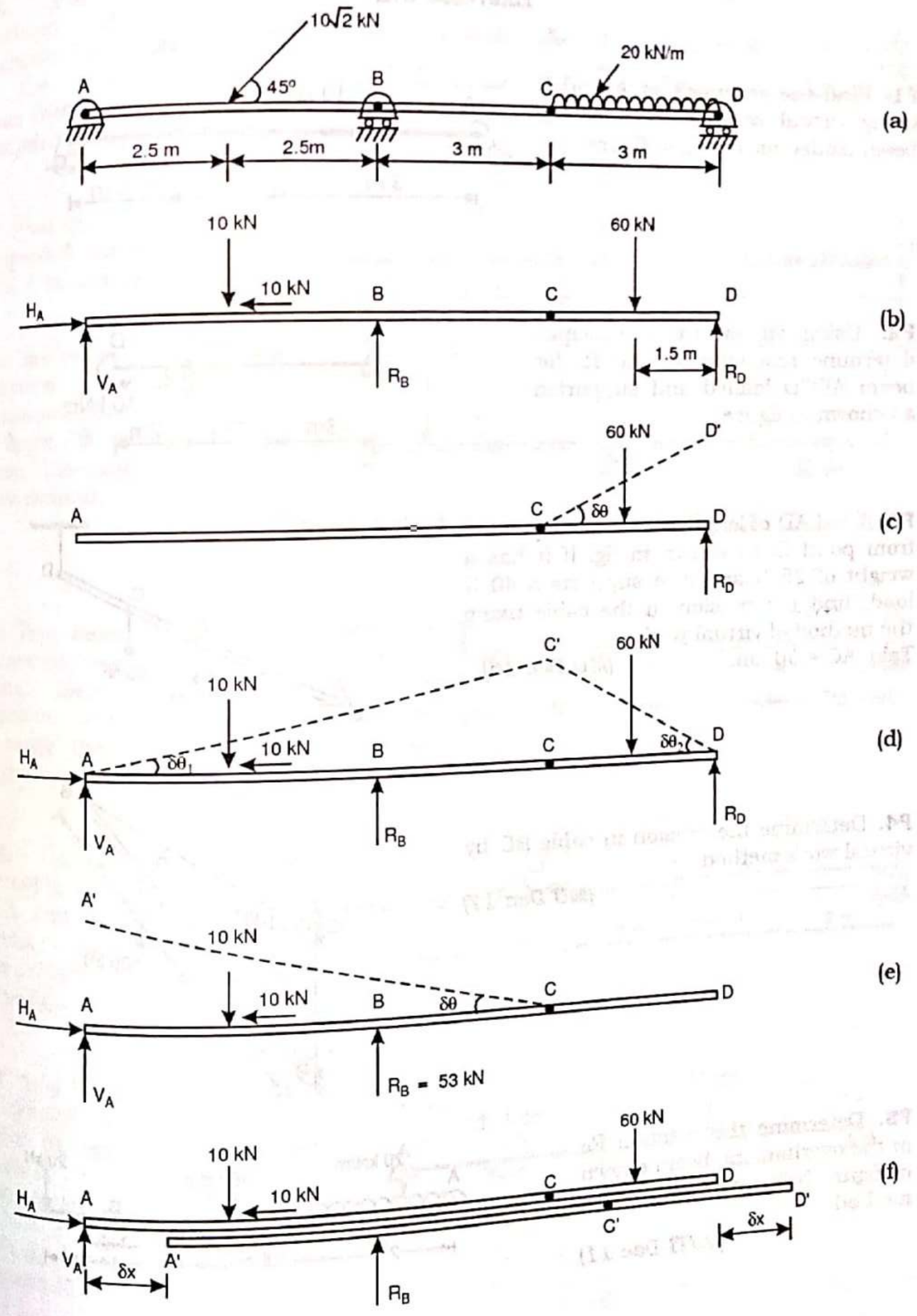

Exercise 8.2

P1. Find the reactions at A and B using virtual work method for the beam loaded as shown in figure.

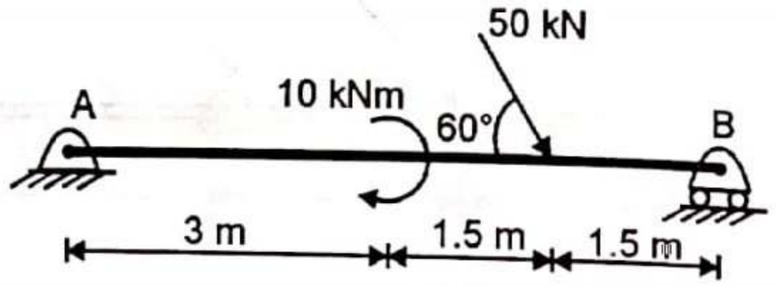

P2. Using virtual work principle, determine reactions R_A and R_C for beam ABCD loaded and supported as shown in figure.

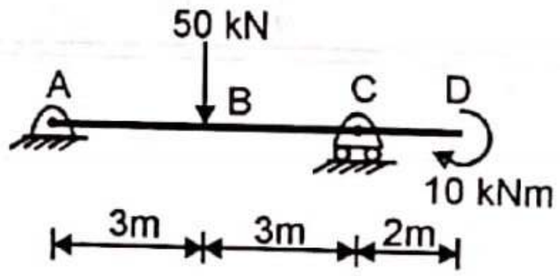

P3. A rod AD of length 40 cm is suspended from point D as shown in fig. If it has a weight of 25 N and also supports a 40 N load, find the tension in the cable using the method of virtual work.
Take AC = 30 cm. ***(MU Dec 16)***

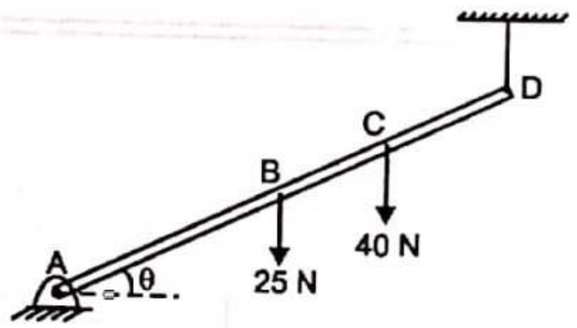

P4. Determine the tension in cable BC by virtual work method.

(MU Dec 17)

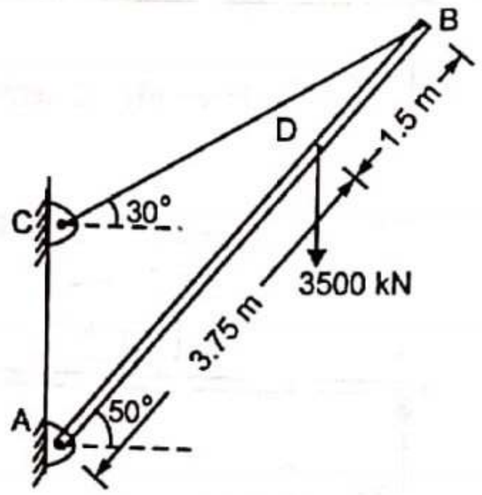

P5. Determine the reaction R_B in the overhanging beam shown in figure by using virtual work method.

(VJTI Dec 11)

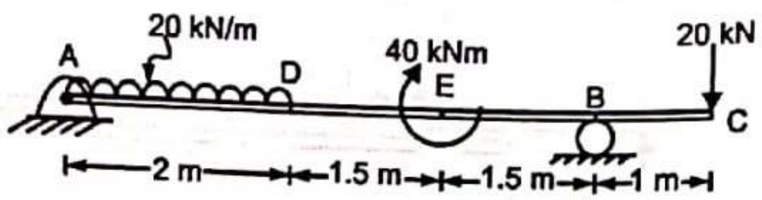

P6. Find the reactions at the supports A,B and C of the compound beam shown.
Use principle of virtual work.

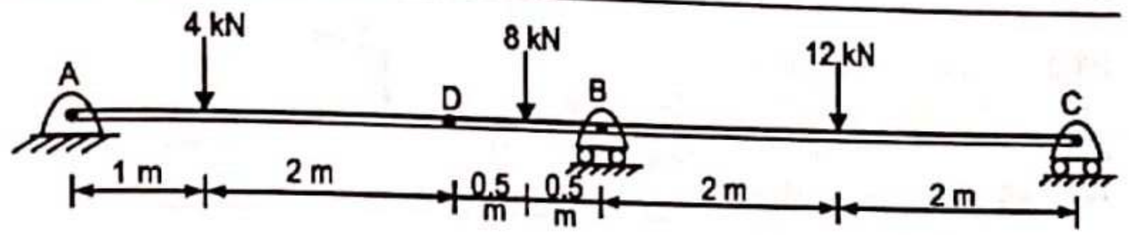

P7. Find the reactions at the supports A and B of the beam ACB. C is an internal hinge.

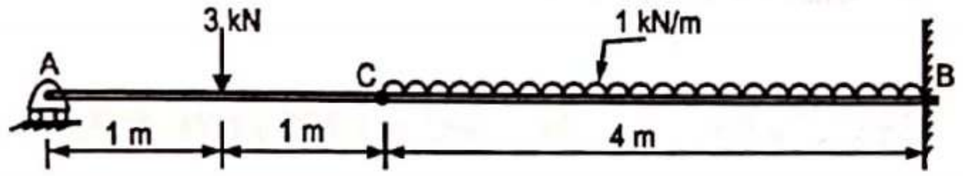

P8. Find the reactions at supports for the compound beam shown in figure. 'B' is internal hinge. Use only virtual work method.

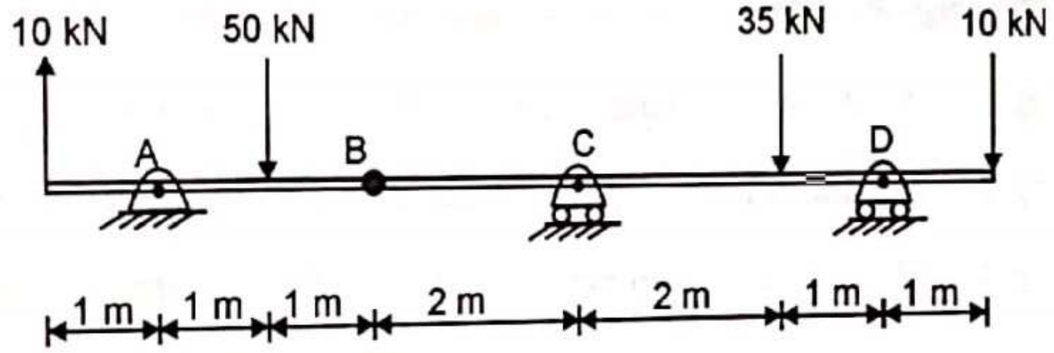

P9. Two beam AB and BCD are pin connected together at B as shown in figure. Determine by virtual work principle, fixing moment and reaction at A. verify the result using principle of statics.

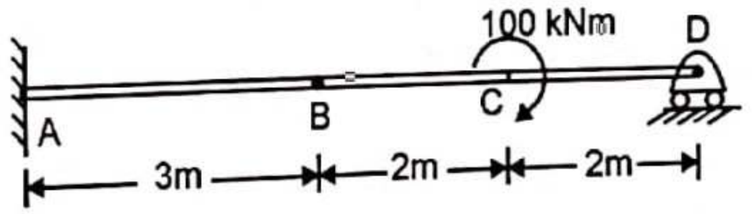

P10. Using virtual work method find support reactions at A and B for the beam system connected by an internal hinge at C as shown in the figure.

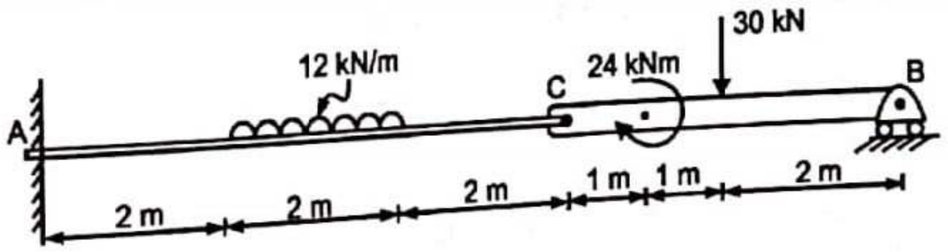

P11. Two beams ABC and CD are pinned together at C as shown in figure. A clockwise couple of 10 kNm acts at E and concentrated load of 60 kN acts at F. using virtual work method, determine reactions at A, B and D.

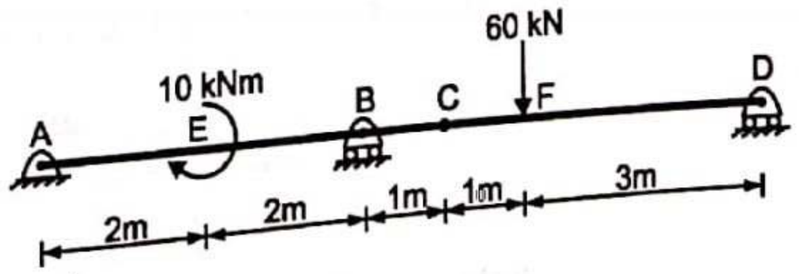

P12. Using principle of Virtual work, determine support reactions at A and B of the beam. Note: H_1 and H_2 are internal hinges.

(NMIMS May 17)

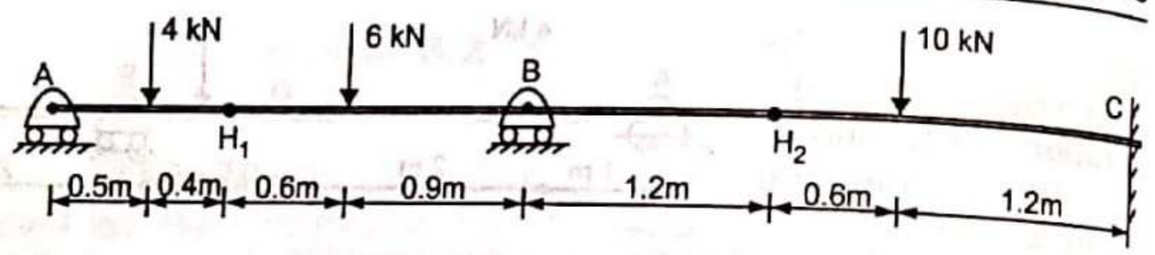

Exercise 8.3

Theory Questions

Q.1 Explain: i) work by force ii) work by couple.

Q.2 Explain the concept of virtual work and its application in mechanics.

Q.3 State and explain principle of virtual work. *(NMIMS May 17)*

★ ★ ★

Chapter 9

Introduction to Dynamics & Kinematics of Particles

Part A : Introduction of Dynamics

9.1 Dynamics: Part of Rigid Body Mechanics

In Chapter 1 of the book we had defined Mechanics as that branch of physical science which is concerned with the resultant effect of forces on bodies, both in a state of rest or in motion. Mechanics is subdivided into three branches viz. Mechanics of Rigid Bodies, Mechanics of Deformable Bodies and Mechanics of Fluids.

Mechanics of Rigid Bodies is the branch of Mechanics where the body is assumed to be perfectly rigid i.e there is no relative movement between the particles forming the body and also there is no deformation of the body under the action of the forces. Though engineering structures and machines do have slight deformation under the action of loads, still they are treated as rigid bodies since the deformations are very small and they can be neglected. We can thus apply the *conditions of equilibrium* to such static bodies and the *equations of motions* to moving bodies.

Mechanics of Rigid Bodies is further divided into Statics and Dynamics. Statics is that part of Rigid Body Mechanics which analysis bodies at rest. On the other hand, Dynamics is that part of Rigid Body Mechanics which analyses motion of moving bodies. By the application of motion analysis we wish to gather information about the following parameters of a moving body.

i) the path traced by moving body

ii) the rate at which the body moves

iii) the time aspect of motion

iv) the position occupied by the body during motion

v) the forces acting on the body which are responsible for the motion

vi) the relation between the forces and the motion so produced

The study of Dynamics herein would help us in answering all the above questions about a moving body.

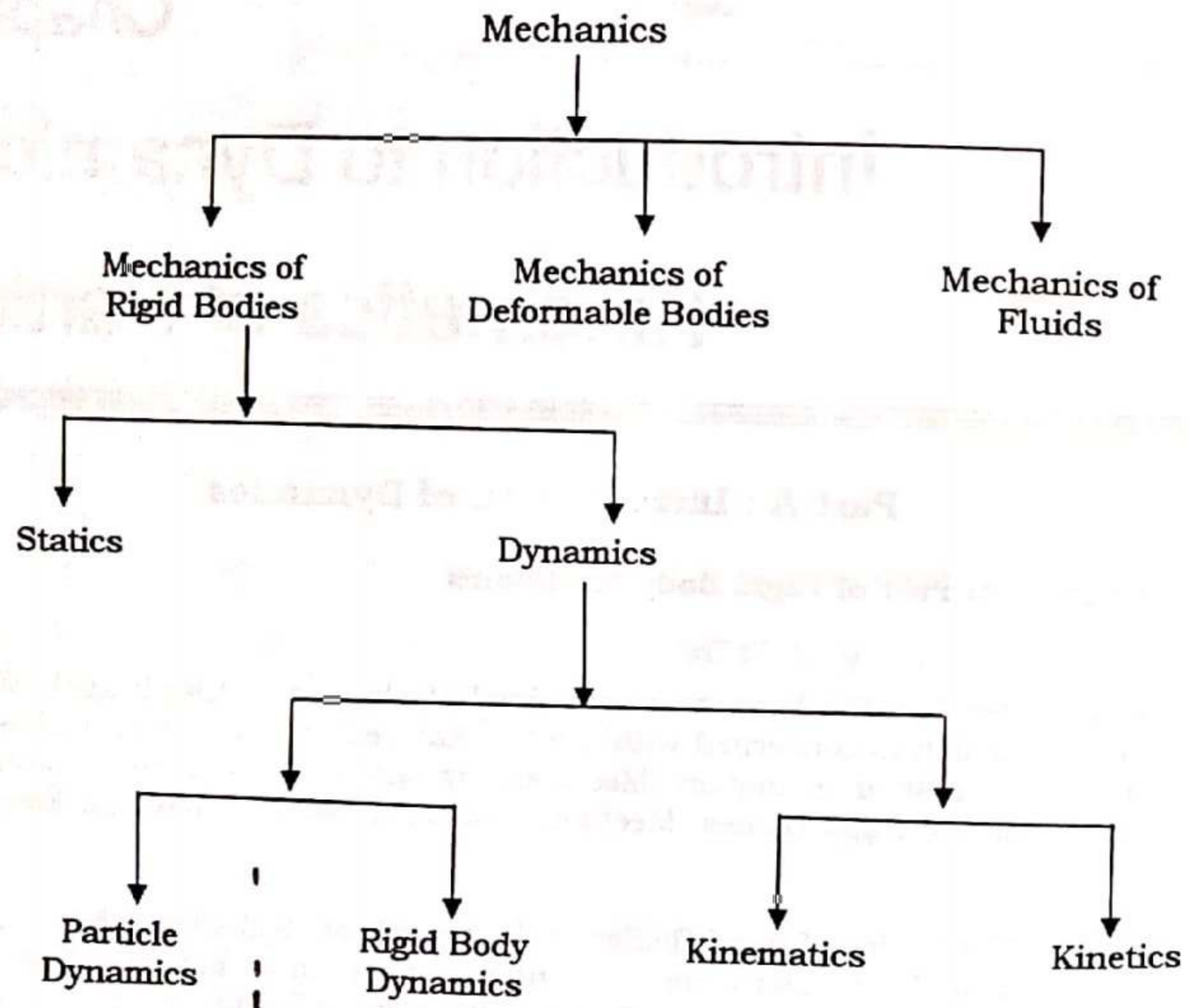

9.2 Kinematics and Kinetics

Dynamics is further subdivided into Kinematics and Kinetics. Bodies acquire motion due to the action of forces on it. The Kinematics part of Dynamics is concerned only with the study of motion of the body without consideration of the forces which have caused the motion of the body. Kinematics therefore analyses only the geometry of the motion.

Kinetics is that part of Dynamics which relates the forces acting on the body to the motion of the body. By knowing the forces acting on the body we can predict the resultant motion of the body using the various laws and principles of Kinetics.

9.3 Particle Dynamics

The motion analysis of a body is referred to as Particle Dynamics when the body is idealized as a particle.

Particle Dynamics may be Kinematic Analysis or could be Kinetic Analysis of motion. When we idealise a body as a particle it does not mean that we are dealing with minute point like object. It rather means that the size and shape of the body is of no consequence in the analysis of the motion. For example if we wish to analyse the motion of a ship traveling between two ports, kilometers apart, then the shape and size of the ship is of no relevance in Motion Analysis. Hence motion of the ship can be characterized by motion of its mass centre. Whenever a body is treated as a particle, all the forces acting on the body are assumed to be concurrent at the mass centre of the body. Any rotation of the body is also neglected. For example if we analyse the motion of an airplane, treating it as a particle is justifiable, as long as we are interested to know the position, rate of motion or the path described by an airplane. However if the plane experiences turbulent motion due to low air pressure pocket then the motion analysis at such an instant cannot be carried out treating the airplane as a particle. In such situations Rigid Body Dynamics has an important role to play.

9.4 Rigid Body Dynamics

In Rigid Body Dynamics, motion analysis involves the shape and size of the body. Since the size is involved, the forces, usually of non concurrent type act at different locations on the body and they tend to cause rotation of the body apart from moving the body. The relation between the forces and the motion so produced is studied in Kinetic Analysis of Rigid Bodies. The relations between the motion of different particles forming the rigid body are studied in Kinematics of Rigid Bodies.

9.5 Reference Frame

For any motion analysis, we need to take a reference frame i.e an origin with a set of co-ordinate axes, for measurement of motion parameters. The reference frame could be fixed or moving.

Newtonian frame of reference also known as Inertial reference frame is a set of co-ordinates axes fixed or moving with uniform velocity. Newton's laws are valid for such a reference frame.

For most of our engineering applications, the Newtonian reference frame is fixed at the earth, assuming it to be stationary. This assumption will not introduce any significant error in the calculations, since earth's angular velocity or angular acceleration is very small as compared to the moving bodies on which we work. However for motion analysis of planets, satellites or rockets, we are required to fix the Newtonian reference frame on a fixed star like the Sun.

Part B : Kinematics of Particles

9.6 Introduction

In this part of the chapter we will do motion analysis of moving particles without taking into account the forces responsible for the motion. We shall study motion of a particle and get to know terms like position, displacement, velocity, acceleration and time. These are the parameters by which we measure motion. We shall study in detail the rectilinear motion and curvilinear motion of a particle.

Special cases of motion viz., motion under gravity and projectile motion form an interesting part of this chapter. Study of motion of a particle with respect to a moving frame of reference would be studied, and finally an alternate solution to rectilinear motion problems, using graphical approach will be dealt with.

9.7 Rectilinear Motion

Motion of a particle in a straight line is known as a rectilinear motion. A car moving on a straight highway, lift traveling in a vertical well, stone falling from the top of a building, are examples of rectilinear motion.

9.7.1 *Position, Displacement and Distance*

For a moving particle, the information of its position, at various instants, is a very important data in motion analysis. *Position means the location of a particle with respect to a fixed reference point.* Such fixed point is usually referred to as the origin 'o'. The point 'o' can be marked anywhere on the particle's straight path. In one direction of the origin, the position is taken as positive and therefore the other side of origin implies negative position. Fig. 9.1 (a) shows a particle occupying position x = 5 m while in Fig. 9.1 (b) the particle occupies a position x = – 3 m.

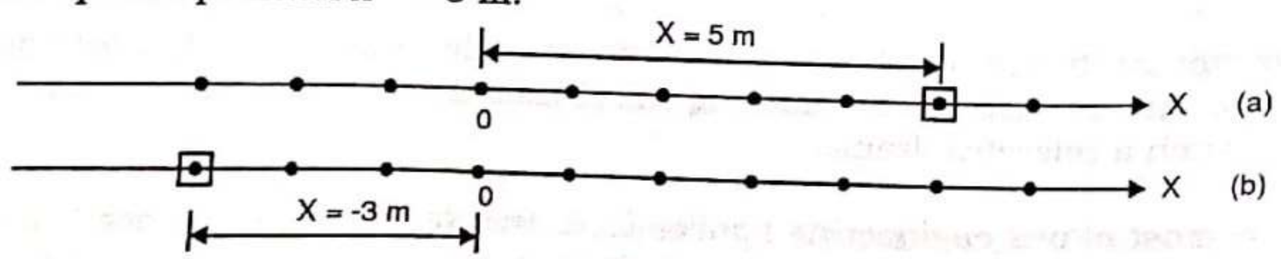

Fig. 9.1

Displacement is defined as a change in position of the particle. It is a vector quantity. If a particle occupies position x_1 at some time t_1 and a new position x_2 at a time t_2, then the displacement during the time $(t_2 - t_1)$ is given by:

$$\Delta x = x_2 - x_1 \qquad \text{.....[9.1]}$$

Displacement is therefore a straight line vector connecting the initial position to the final position and has no relation with the actual distance traveled by the particle.

For example [refer fig. 9.1 (c)], let a particle P at t = 0, occupy a position x = 5m. Let the particle move 2 m in the + ve direction and occupy a position x = + 7 m at t = 3 sec. Let the particle now reverse its sense of motion and start moving in the – ve direction. Let at t = 8 sec, its position be x = – 6 m.

Displacement of the particle during 8 sec of motion would be,

$$\Delta x = x_8 - x_0$$
$$= (-6) - (5) = -11 \text{ m}$$

or displacement = 11 m ←

Distance is defined as the actual length of the path traced by the particle during the period of motion.

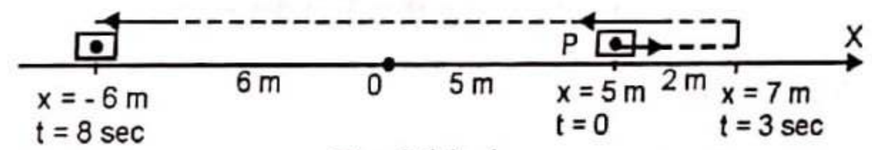

Fig. 9.1 (c)

It is a scalar quantity. In the above example, distance travelled by the particle during 8 sec of motion,

$$\text{Distance} = 2 + 7 + 6 = 15 \text{ m}$$

Here we note that for rectilinear moving particles, distance and displacement magnitudes are same. If the particle moves in one sense and does not reverse. However distance and displacement magnitudes are different, if the particle stops momentarily and reverses its sense of motion during the time interval of motion study.

9.7.2 *Velocity*

'How fast' a particle moves is the velocity of the particle in motion. Consider a particle occupying position x at time t and after a small time interval of Δt occupies a new position x + Δt. 'How fast' the particle has moved during the time interval Δt is known as the average velocity of the particle.

$$\text{Average velocity} = \frac{\text{Displacement}}{\text{Time}} = \frac{(x + \Delta x) - x}{\Delta t}$$

$$\therefore \quad v_{Av} = \frac{\Delta x}{\Delta t} \qquad \text{.....[9.2]}$$

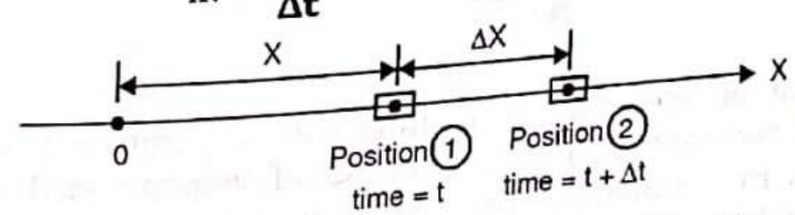

Fig. 9.2

If the time interval Δt is made smaller and smaller, the average velocity will become *instantaneous velocity*, i.e velocity at a particular instant. Instantaneous velocity is usually referred to as the velocity of the particle and denoted as v.

$$v = \lim_{\Delta t \to 0} \frac{\Delta x}{\Delta t}$$

Now by definition, $\lim_{\Delta t \to 0} \frac{\Delta x}{\Delta t}$ is the derivative of x with respect to t.

$$\therefore \quad \mathbf{v = \frac{dx}{dt}} \qquad \text{.....[9.3]}$$

S.I Unit of velocity v is metres/sec (m/s). The magnitude of velocity is known as the speed of the particle. A positive value of v indicates that the particle is moving in the positive direction i.e the position x increases with time. A negative value of velocity indicates that the particle is moving in the negative direction i.e the position x decreases with time.

For example, if vertically upward direction is taken as positive and a stone is thrown vertically up, it will have + ve velocity during its upward motion till the peak, while it will have – ve velocity during its return downwards.

9.7.3 *Acceleration*

A moving particle has velocity at every instant of its motion. If its velocity changes, the rate of change of velocity with time is the acceleration of the particle.

If a particle has a velocity 'v' at a certain instant and its velocity changes to $v + \Delta v$ during a time interval of Δt, the average acceleration of the particle during this time interval is

$$\text{Average acceleration} = \frac{\text{Change in velocity}}{\text{time}} = \frac{(v+\Delta v) - v}{\Delta t}$$

$$\therefore \quad \mathbf{a_{av} = \frac{\Delta v}{\Delta t}} \qquad \text{.....[9.4]}$$

If the time interval Δt is made smaller and smaller, the average acceleration will become instantaneous acceleration. Instantaneous acceleration is usually referred to as the acceleration of the particle is and denoted as 'a'.

$$a = \lim_{\Delta t \to 0} \frac{\Delta v}{\Delta t}$$

By definition, $\lim_{\Delta t \to 0} \frac{\Delta v}{\Delta t}$ is the derivative of v with respect to t

$$\therefore \quad \mathbf{a = \frac{dv}{dt}} \qquad \text{.....[9.5]}$$

SI unit of acceleration 'a' is m/s^2. A positive value of acceleration is indicative of increase in the magnitude of velocity with time i.e the body is moving faster in the positive direction. A negative value of acceleration indicates that the particle is moving more slowly in the + ve direction or moves more faster in the – ve direction.

9.8 Different Rectilinear Motions

Different types of rectilinear motions possible are

i) Motion with Uniform Velocity
ii) Motion with Uniform Acceleration
iii) Motion with Variable Acceleration.

These are further explained in detail.

9.8.1 *Uniform Velocity Motion*

For a particle whose velocity remains the same throughout the motion is said to undergo a uniform velocity motion. For example, motion of sound, a train traveling during a certain interval at a constant speed, packages moving on a conveyor belt etc. perform uniform velocity motion.

We know velocity $\quad v = \frac{dx}{dt}$

or $\quad dx = v\,dt$

Integrating $\quad \int_{x_1}^{x_2} dx = \int_{t_1}^{t_2} v\,dt$

$$(x_2 - x_1) = v(t_2 - t_1)$$

here $\quad x_2 - x_1 = \Delta x =$ distance traveled s (since velocity is constant)

and $\quad t_2 - t_1 = t =$ time interval

$\therefore \quad s = v\,t$

or $\quad \mathbf{v = \frac{s}{t}}$ Uniform Velocity Equation .....[9.6]

9.8.2 *Uniform Acceleration Motion*

A particle is said to perform uniform acceleration motion if its velocity changes at a uniform rate.

If u is the initial velocity of a particle,
v is the final velocity and
t is the time interval, then the acceleration a of the particle is,

$$a = \frac{v-u}{t}$$

or $\quad \mathbf{v = u + at}$ Uniform Acceleration Equation 1 .....[9.7 (a)]

If s is the distance traveled during this time interval

then $\quad s =$ Average velocity $\times$ t

$$s = \frac{u+v}{2}\,t \qquad \therefore \quad s = \frac{u+(u+at)}{2}\,t$$

or $\quad \mathbf{s = ut + \tfrac{1}{2}\,at^2}$ Uniform Acceleration Equation 2 .....[9.7 (b)]

From Equation **9.7 (a)**, we have

$$t = \frac{v-u}{a}$$

Substituting in Equation **9.7 (b)**, we get

$$s = u\left(\frac{v-u}{a}\right) + \frac{1}{2}a\left(\frac{v-u}{a}\right)^2$$

$$s = \frac{v^2 - u^2}{2a}$$

or $\mathbf{v^2 = u^2 + 2as}$ Uniform Acceleration Equation 3 .....**[9.7 (c)]**

Ex.9.1 Cars P and Q are traveling in parallel lanes on a straight highway with a uniform velocity of 72 kmph. Car P is ahead of car Q by 200 m. At a certain instant, car P decelerates uniformly at 2.5 m/s², whereas car Q accelerates uniformly at 2 m/s². When and where will the car Q overtake car P.

Solution:

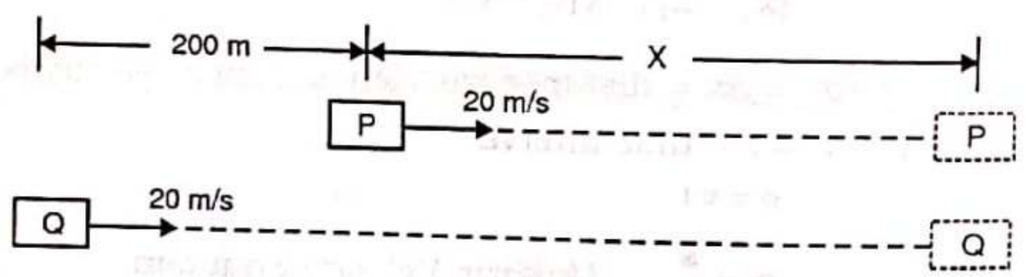

Refer figure. Let car P travel x metres and so car Q travels x + 200 metres as Q overtakes P.

<u>Motion of car P</u>
Rectilinear Motion
Uniform acceleration
u = 20 m/s
v = – *
s = x
a = - 2.5 m/s²
t = t sec
using s = ut + ½ at²
x = 20 t + ½ ×(-2.5) × t² .....(1)

<u>Motion of car Q</u>
Rectilinear Motion
Uniform acceleration
u = 20 m/s
v = – *
s = x + 200
a = 2 m/s²
t = t sec
using s = ut + ½ at²
x + 200 = 20 t + ½ ×2 × t² ..... (2)

Solving (1) and (2)

t = 9.428 sec..... **Ans.**
x = 77.45 m ..... **Ans.**

* *The sign – implies that we are not interested in finding that particular parameter.*

Ex.9.2 A car starts from rest and travels on a straight road with a constant acceleration of 1.2 m/s². After some time a scooter passes by it traveling in the opposite direction with a uniform velocity of 36 kmph. The scooter reaches the starting position of the car 30 sec after car had left from there. Determine when and where the two vehicles passed each other.

Solution:

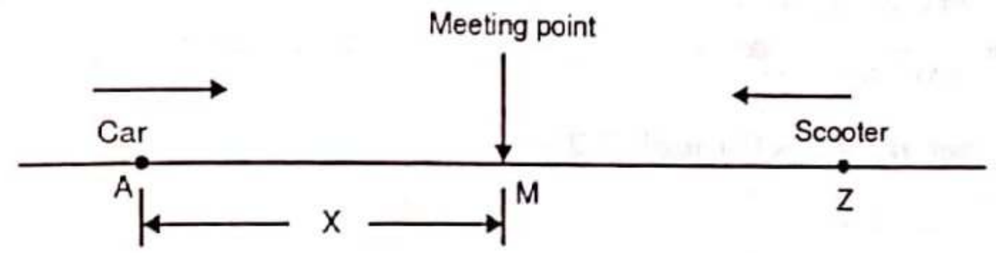

Refer figure. At t = 0, let the car be at position A and the scooter be at position Z. Let the two vehicles pass each other at M which is x metres from A, t sec later.

<u>Motion of car</u>
Uniform acceleration

(A to M)
u = 0
v = – *
s = x
a = 1.2 m/s²
t = t sec
using s = ut + ½ at²
x = 0 + ½ × 1.2 × t²
x = 0.6 t² ..... (1)

<u>Motion of scooter</u>
Uniform velocity
(Z to A)
v = 36 kmph = 10 m/s
s = ?
t = 30 sec
using $v = \frac{s}{t}$
$10 = \frac{s}{30}$
s = 300 m
∴ the scooter was 300 m away from the car when the car started its motion

(Z to M)
v = 10 m/s
s = (300 – x) metres
t = t sec
using $v = \frac{s}{t}$
$10 = \frac{300 - x}{t}$
x = 300 – 10 t ..... (2)

Solving equations (1) and (2)
t = 15.53 sec ..... **Ans.**
x = 144.71 m ..... **Ans.**

* *The sign – implies that we are not interested in finding that particular parameter.*

Ex. 9.3 A point is moving with uniform acceleration. In the 11th and 15th second from the commencement, it moves through 7.2 m and 9.6 m respectively. Find its initial velocity and the acceleration with which it moves. ***(M. U. May 08)***

Solution: For a uniformly accelerated rectilinear moving particle, the distance covered in the nth second is given by

$$s^{n^{th}} = u + a \times n - \frac{a}{2}$$

In the 11th sec it moves through 7.2 m

$$\therefore \quad 7.2 = u + a \times 11 - \frac{a}{2} \quad \text{..... (1)}$$

In the 15th sec it moves through 9.6 m

$$\therefore \quad 9.6 = u + a \times 15 - \frac{a}{2} \quad \text{..... (2)}$$

Solving equations (1) and (2) we get

$a = 0.6\ m/s^2$ ..... **Ans.**

and $u = 0.9\ m/s$ ..... **Ans.**

9.8.3 *Motion Under Gravity (M.U.G)*

Any object projected vertically up in the air or projected vertically down towards the earth performs a rectilinear motion with uniform acceleration. The acceleration is constant and its magnitude is $g = 9.81\ m/s^2$. M. U. G therefore is a special case of uniform acceleration motion.

Consider a ball thrown vertically up with an initial velocity v_o from the top of a tower at A and of height h. The ball would travel vertically up performing rectilinear motion.

The velocity keeps on reducing at a uniform rate of 9.81 m/s every sec. i.e 9.81 m/s² till it becomes zero at B. This is the maximum height y_{max} reached by the ball. The downward motion of the ball now begins and the velocity goes on increasing from zero at a uniform rate of again 9.81 m/s².

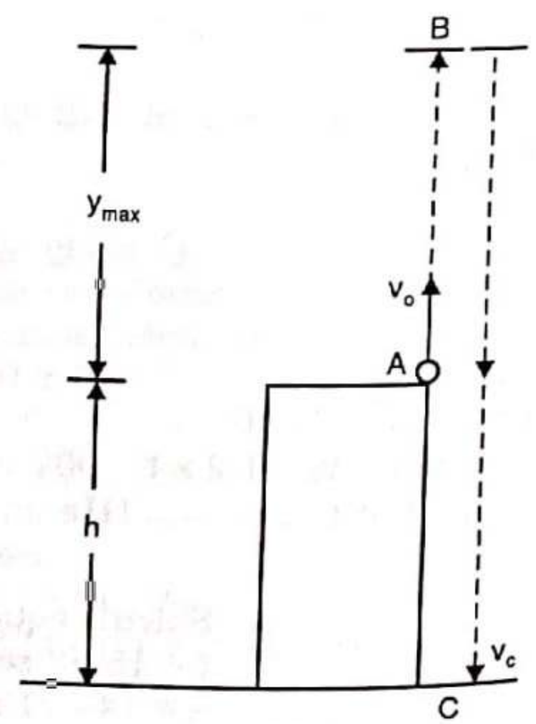

Fig. 9.3

While passing point A it will have the same speed v_o but pointing downwards. The ball would finally land on the ground at C with a velocity v_c after time t sec. Knowing v_o and h we can find the maximum height y_{max}, time of flight t and final velocity of landing v_c using equations of uniform acceleration.

For solving problems on M.U.G follow the guidelines listed below.

1) Take the starting point as the origin and take all directions either ↑ + ve or ↓ + ve.
2) By directions, we mean the direction of displacement, velocity and acceleration.
3) With proper sign convention use the three equations of uniform accelerations viz.,

$$v = u + at$$
$$s = ut + \tfrac{1}{2} at^2$$
$$v^2 = u^2 + 2as$$

here,

u is the velocity at the start of M.U.G
v is the final velocity
s is the displacement of the particle
t is the time interval
a is the uniform acceleration due to gravity whose magnitude is 9.81 m/s²

Ex. 9.4 A stone is thrown vertically upwards and returns to the ground in 6 sec. Find how high does the stone go and its initial velocity of projection. ***(MU May 13)***

Solution: Let the stone be projected with an initial velocity v_o from A. Let it travel h_{max} metres, to the peak at B and return to ground at C. The stone's displacement is zero between A and C. Also the stone's velocity at the peak is zero.

Motion of stone

Entire motion (A – C)	Ground to peak (A – B)
M.U.G ↑ + ve	M.U.G ↑ + ve
$u = v_0$	$u = 29.43\ m/s$
$v = -$	$v = 0$
$s = 0$	$s = h_{max}$
$a = -9.81\ m/s^2$	$a = -9.81\ m/s^2$
$t = 6$ sec.	$t = -$
Using $s = ut + \frac{1}{2} at^2$	Using $v^2 = u^2 + 2as$
$0 = v_0 \times 6 + \frac{1}{2}(-9.81) \times 6^2$	$0 = 29.43^2 + 2 \times (-9.81) \times h_{max}$
$\therefore v_0 = 29.43\ m/s$ ... **Ans.**	$\therefore \quad h_{max} = 44.145\ m$ ..... **Ans.**

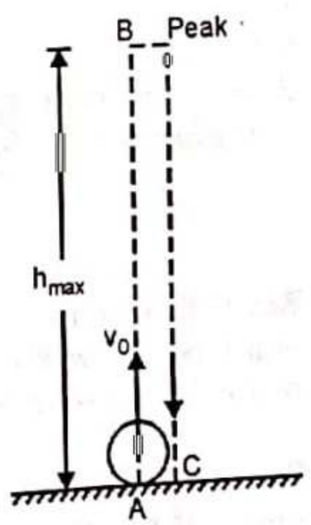

Ex. 9.5 A ball is projected vertically upwards into the air at 30 m/s. After 2 sec another ball is projected vertically upwards and it crosses the first ball at 20 m from the ground. What is the velocity of projection of the second ball.

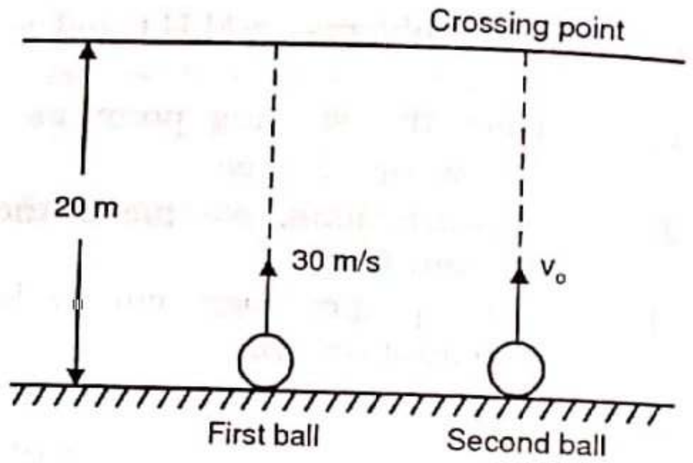

Solution: Refer figure

Motion of first ball
(Ground to crossing point)

M.U.G ↑ + ve
$u = 30$ m/s
$v = -$
$s = 20$ m
$a = -9.81$ m/s²
$t = t_1$ sec.

Using $s = ut + \frac{1}{2}at^2$
$20 = 30\,t_1 + \frac{1}{2}(-9.81)\,t_1^2$

solving the quadratic, we get two values of t_1
$t_1 = 5.355$ sec and 1.99 sec

Since the second ball was projected after 2 sec, the time $t_1 = 1.99$ sec is invalid
∴ taking $t_1 = 5.355$ sec.

Motion of second ball
(Ground to crossing point)

M.U.G ↑ + ve
$u = v_o$ m/s
$v = -$
$s = 20$ m
$a = -9.81$ m/s²
$t = t_2 = (t_1 - 2)$ sec

form the motion analysis of first ball we find

$t_1 = 5.355$ sec
$t_2 = 5.355 - 2$
∴ $t_2 = 3.355$ sec.

Using $s = ut + \frac{1}{2}at^2$
$20 = v_o\,(3.355) + \frac{1}{2}(-9.81)\,(3.355)^2$
∴ $v_o = 22.42$ m/s ..... **Ans.**

Ex. 9.6 Water drops drip from a leaking tap at a rate of 4 drops per sec. At an instant what is the vertical separation between two consecutive drops if the lower of the two drops has a velocity of 5 m/s

Solution: Refer figure. Let A be the lower of the two consecutive drops A and B. Since four drops are released in one sec, each drop comes out of the tap after ¼ = 0.25 sec.
At the given instant if drop A is in motion for t_1 sec, the drop B is in motion for $(t_1 - 0.25)$ sec

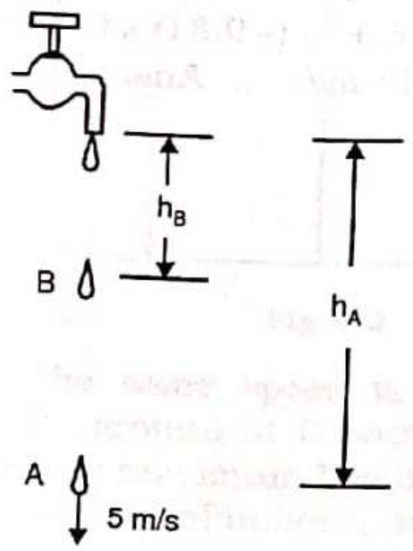

Motion of drop A
M.U.G ↓ + ve
$u = 0$
$v = 5$ m/s
$s = h_A$ metres
$a = 9.81$ m/s²
$t = t_1$ sec

Using $v = u + at$
$5 = 0 + 9.81 \times t_1$
$t_1 = 0.5097$ sec

Using $s = ut + \frac{1}{2}at^2$
$h_A = 0 + \frac{1}{2}(9.81)\,(0.5097)^2$
$h_A = 1.274$ m

Motion of drop B
M.U.G ↓ + ve
$u = 0$
$v = -$
$s = h_B$ metres
$a = 9.81$ m/s²
$t = t_2 = (t_1 - 0.25)$ sec

By motion analysis of drop A
We get $t_1 = 0.5097$ sec
∴ $t_2 = 0.5097 - 0.25$
$= 0.2597$ sec
Using $s = ut + \frac{1}{2}at^2$
$h_B = 0 + \frac{1}{2}(9.81)\,(0.2597)^2$
$h_B = 0.3308$ m

Vertical separation between drops A and B
$= h_A - h_B$
$= 1.274 - 0.3308$
$= 0.9432$ m ..... **Ans.**

Ex.9.7 A stone is dropped in a well and 6 seconds later the sound of splash is heard. At what level is the water surface from the top of the well. Take velocity of sound as 330 m/s.

Solution: Let the water surface be at a distance x from the well top. Let the stone take t seconds to hit the water surface. The sound of splash now travels upwards and reaches the well top in (6 – t) seconds.

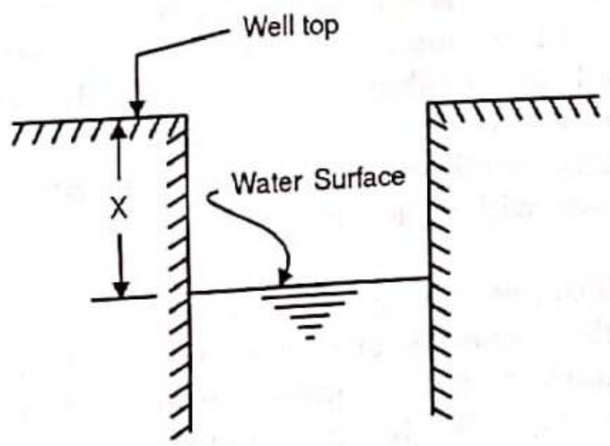

Motion of stone
(Well top – Water surface)
Rectilinear Motion
M.U.G ↓ + ve
$u = 0$
$v = -$
$s = x$ metres
$a = 9.81$ m/s²
$t = t$ sec

Using $s = ut + \frac{1}{2}at^2$

$x = 0 + \frac{1}{2}(9.81)\,(t)^2$ .....(1)

Motion of sound
(Water surface – Well top)
Rectilinear Motion
Uniform velocity
$v = 330$ m/s
$s = x$ metre
$t = (6 - t)$ sec

Using $v = \frac{s}{t}$

$330 = \frac{x}{6-t}$ ..... (2)

Solving equations (1) and (2), we get
$x = 150.8$ m ..... **Ans.**

Ex. 9.8 A stone is released from top of a tower, during the last second of its motion, it covers ¼ th of the height of the tower. Find the height of the tower. ***(MU Dec 08)***

Solution: Let the height of tower be h and t be the total time taken to reach the ground.

Motion of stone M.U.G ↓ + ve

Position (1) to (2)

$u = 0$

$v = -$

$s = \frac{3}{4}h$ metre

$a = 9.81 m/s^2$

$t = (t-1)$ sec

Using $s = ut + \frac{1}{2}at^2$

$\frac{3}{4}h = 0 + \frac{1}{2} \times 9.81(t-1)^2$

$h = 6.54(t^2 - 2t + 1)$ ... (1)

Position (1) to (3)

$u = 0$

$v = -$

$s = h$ metre

$a = 9.81 m/s^2$

$t = t$ sec

Using $s = ut + \frac{1}{2}at^2$

$h = 0 + \frac{1}{2} \times 9.81 \times t^2$

$h = 4.905t^2$ ..... (2)

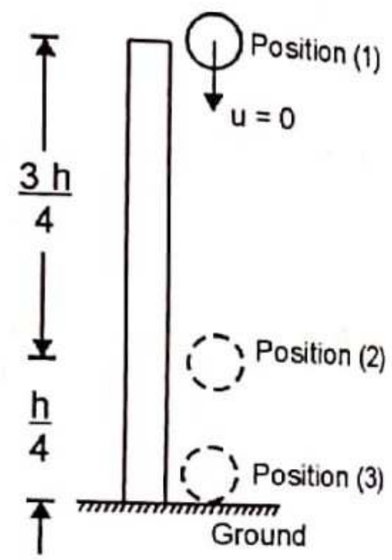

Solving equations (1) and (2) we get

t = 7.464 sec and h = 273.26 m ..... **Ans.**

Ex. 9.9 In a relief operation a helicopter moving vertically upwards with uniform velocity drops food packets. From a certain height above ground the first packet is released and it takes 5 sec to reach the ground. At the instant the first packet touches the ground, the second food packet is released and it takes 7 sec to reach the ground. Determine the height from which the first packet is released and also the velocity of the helicopter with which it is moving up.

Solution: Let the helicopter move up with a velocity of v_H. Let the first packet be dropped from position-(1) height 'h' metres above ground. Let the second packet be dropped from position-(2) 'y' metres above position-(1). Refer figure.

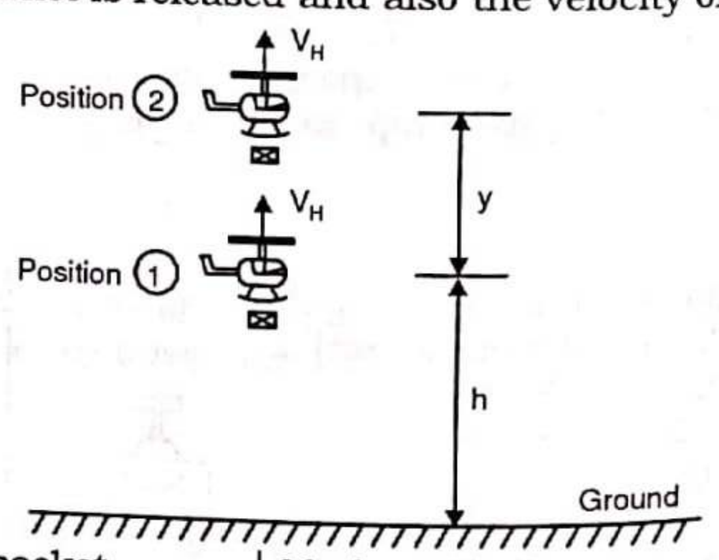

Motion of first packet
(Position (1) to ground)
M.U.G ↓ + ve
$u = -v_H$ m/s
$v = -$
s = h meters
$a = 9.81 m/s^2$
t = 5 sec

Motion of second packet
(Position (2) to ground)
M.U.G ↓ +
$u = -v_H$
$v = -$
s = (h+y) metres
$a = 9.81 m/s^2$
t = 7 sec

Motion of helicopter
(Position (1) to (2))
Uniform velocity
$v = v_H$
s = y
t = 5 sec

Using $s = ut + ½ at^2$

$h = -v_H(5) + ½ (9.81)(5)^2$

$h = -5 v_H + 122.63$ ...(1)

Using $s = ut + ½ at^2$

$(h+y) = -v_H(7) + ½ (9.81) \times (7)^2$

$(h+y) = -7 v_H + 240.35$ ...(2)

Using $v = \frac{s}{t} \Rightarrow v_H = \frac{y}{5}$

$y = 5 v_H$ .....(3)

Solving equations (1), (2) and (3) we get

$v_H = 16.82$ m/s and H = 38.55 m ..... **Ans.**

Exercise 9.1-A

P1. A car starts from rest and accelerates uniformly at 1.5 m/s² for 20 sec. It then maintains a constant speed for the next 10 minutes after which it decelerates uniformly at 4 m/s² and comes to a halt. Find the total distance travelled, total time of travel and average speed of the car.

P2. A motorist is travelling at 90 kmph, when he observes a traffic signal 250 m ahead of him turns red. The traffic signal is timed to stay red for 12 sec. If the motorist wishes to pass the signal without stopping just as it turns green. Determine (i) the required uniform deceleration of the motor. (ii) The speed of motor as it passes the signal. ***(MU Dec 13, VJTI Dec 16)***

P3. Two elevators in adjoining wells are vertically 60 m apart start from rest at the same instant and approach each other. The up moving elevator travels up with a uniform acceleration of 0.3 m/s². The down moving elevator travels down with an acceleration of 0.15 m/s². When do the elevators cross each other? What is the distance traveled by each of them at this instant

P4. A sprinter in a 100 m race accelerates uniformly for the first 35 m and then runs with constant velocity. If the sprinter's time for the first 35 m is 5.4 seconds, determine his time for the race. ***(MU May 14)***

P5. Cars A and B travel on a straight highway. At t = 0, car A travelling at 54 kmph decelerates at 0.5 m/s², while car B, 50 m behind car A, travelling at 36 kmph accelerates at 0.8 m/s². Find the distances and time taken by the two cars before B overtakes A.

P6. A particle starts from rest and accelerates at a constant rate of 0.5 m/s² for sometime. Thereafter it decelerates at a constant rate of 0.3 m/s² and comes to rest. If the particle was in motion for 2 minutes, find the maximum velocity acquired by it.

P7. A block is released from rest from the top of an inclined plane and it takes 5 sec to reach the bottom of the plane. What is the time it takes to travel one fifth the distance from the top.

P8. An athlete running a 100 m run starts from rest and reaches his maximum speed in a distance of 15 m. He runs the remaining distance with that velocity and reaches the finish in 9.6 sec. Determine the initial acceleration and the maximum velocity acquired by the athlete.

P9. Track repairs are going on a 4 km length of railway track. The maximum speed of the train is 108 kmph. The speed over the repair track is 30 kmph. If the train approaching the repair track decelerates uniformly from a full speed of 108 kmph to 30 kmph in a distance of 1200 m and after covering the repair track accelerates uniformly to full speed of 108 kmph in a distance of 1500 m, find the time lost due to reduction of the speed in the repair track.

P10. An automobile starts from rest and travels on a straight path at 2 m/s² for some time. After which it decelerates at 1 m/s², till it comes to a halt. If the distance covered is 300 m, find the maximum velocity of the automobile and the total time of travel.

Exercise 9.1–B

P1. A stone is thrown vertically up from the top of the tower 20 m high with a speed of 15 m/s. Find (1) max. height reached by the stone above ground. (2) velocity with which the stone hits the ground. (3) total time of flight.

P2. A ball is thrown vertically upwards with a velocity 9 m/s from the edge of a cliff 15 m above the sea level. What is the highest point above sea level reached? How long does it take to hit the water? With what velocity does it hit the water? ***(VJTI Nov 09)***

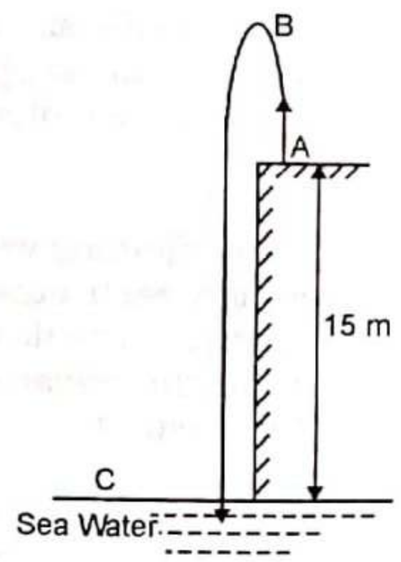

P3. A particle falling under gravity travels 25 m in a particular second. Find the distance travelled by it in next three seconds. ***(M.U Dec 16)***

P4. A hot air balloon starts rising vertically up from the ground with an acceleration of 0.2 m/s². 12 seconds later the man sitting inside the balloon releases a stone. Find the time taken by the stone to hit the ground. ***(M.U Dec 15)***

P5. A stone is thrown vertically up from the top of the tower 40 m high with a velocity of 20 m/s. Three seconds later another stone is thrown vertically up from the ground with a velocity of 30 m/s. Calculate when and where the two stones will meet from the foot of the tower.

P6. A stone is dropped from the top of a tower. When it has fallen a distance of 10 m, another stone is dropped from a point 38 m below the top of the tower. If both the stones reach the ground at the same time calculate
(i) the height of the tower
(ii) the velocity of the stones when they reach the ground. ***(M. U. Dec 09)***

P7. Water drips from a tap at a rate of 5 drops per second. The tap is 900 mm above the basin. When one drop strikes the basin, how far is the next drop above the basin.

P8. Water leaks from a ceiling 16 m high, at the rate of 5 drops per second. Find the distance between first and second drop when the first drop has just touched the ground. ***(MU Dec 07)***

P9. Drops of water leak from a tap 2 m above the basin at regular intervals. As the first drop strikes the basin the fourth drop starts its fall. What is the spacing between the drops 1 and 2, drop 2 and 3, drops 3 and 4 at this instant.

P10. A stone released from rest falls freely under gravity. The distance covered by it in the last second of its motion equals the distance covered in the first four seconds of its motion. Find the time the stone was in motion. ***(VJTI Apr 17)***

P11. A ball thrown vertically up was found to travel a distance of 5 m during 3rd second of its travel. What is the initial velocity of the ball? ***(NMIMS Feb 10)***

P12. A halogen gas filled balloon released from the ground, travels vertically up with a constant acceleration of 2 m/s². Three seconds later, a stone is projected vertically up from the ground to hit the ascending balloon. The stone just manages to touch the balloon at the peak of its path. Find the velocity with which the stone was projected and the height at which the stone touches the balloon.

9.8.4 *Variable Acceleration Motion*

Variable acceleration implies that rate of change of velocity is not uniform. Rectilinear motions are not always uniformly accelerated, but more often undergo variable acceleration. For example suspend a block from a vertical spring, stretch it and then release. The block would oscillate up and down undergoing variable acceleration motion. The acceleration here is variable and it is proportional to the deformation of the spring.

Variable acceleration motion is usually defined by acceleration written as a function of time or velocity or position. For the solution of variable acceleration motion, we make use of the basic three differential relations of velocity and acceleration given below. Two of them have been derived earlier as equations 9.3 and 9.5

$$v = \frac{dx}{dt} \qquad \text{.....[9.3]}$$

$$a = \frac{dv}{dt} \qquad \text{.....[9.5]}$$

From 1 and 2 $$a = v\frac{dv}{dx} \qquad \text{.....[9.8]}$$

The following examples illustrates the method of solving variable acceleration motion problems.

Ex. 9.10 The acceleration of a particle performing rectilinear motion is given by $a = k.t^2$ m/s². It is found that v = – 24 m/s when t = 0 and v = 48 m/s when t = 4 sec. Also x = 0 at t = 3 sec. Find the value of k and also the position, velocity and acceleration of the particle at t = 2 sec.

Solution: Given $a = f(t)$

$\therefore \quad a = k.t^2$ ..... (1)

Let us find $v = f(t)$

Using $a = \frac{dv}{dt} \quad \therefore \quad \frac{dv}{dt} = kt^2$

$\therefore \quad dv = kt^2 dt$

Integrating taking lower limit as v = – 24 and t = 0

$$\int_{-24}^{v} dv = \int_{0}^{t} kt^2 dt \quad \therefore \quad v + 24 = k.\frac{t^3}{3}$$

$$\therefore \quad v = \frac{k}{3}t^3 - 24 \quad .....(2)$$

Substituting v = 48 m/s at t = 4 sec.

$$48 = \frac{k}{3}(4)^3 - 24 \quad \therefore \quad k = 3.375 \quad ..... \textbf{Ans.}$$

Substituting the value of k in equation (2), we get

$$v = 1.125\, t^3 - 24 \text{ m/s} \quad ..... (3)$$

Let us find $x = f(t)$

using $v = \frac{dx}{dt} \quad \therefore \quad \frac{dx}{dt} = 1.125\, t^3 - 24$

or $dx = 1.125t^3 - 24\, dt$

Integrating taking lower limit as x = 0 and t = 3

$$\int_{0}^{x} dx = \int_{3}^{t} 1.125t^3 - 24\, dt$$

$$[x]_0^x = [0.2813t^4 - 24t]_3^t$$

$$x = 0.2813t^4 - 24t + 49.22 \text{ m} \quad .....(4)$$

at t = 2 sec

$a = 3.375(2)^2 \quad \therefore \quad a = 13.5$ m/s² ..... **Ans.**

$v = 1.125\,(2)^3 - 24 \quad \therefore \quad v = -15$ m/s ..... **Ans.**

$x = 0.2813\,(2)^4 - 24(2) + 49.22 \quad \therefore \quad x = 5.721$ m ..... **Ans.**

Ex. 9.11 The velocity of the particle travelling in a straight line is given by $v = 6t - 3t^2$ m/s. Where t is in seconds. If s = 0 when t = 0, determine the particle's deceleration and position when t = 3 sec. How far has the particle travelled during the 3 second time interval and what is its average speed? ***(M.U Dec 10)***

Solution: Given $v = f(t) \quad \therefore \quad v = 6t - 3t^2$ m/s ..... (1)

Let us find $a = f(t)$

Using $a = \frac{dv}{at} \quad \therefore \quad a = 6 - 6t$ m/s² ..... (2)

$\therefore$ at t = 3 sec, $a = 6 - 6(3) = -12$ m/s²

Or Deceleration at t = 3 sec is 12 m/s² ..... **Ans.**

Let us find $x = f(t)$

Using $v = \frac{dx}{at}$ or $dx = v.dt$

$\therefore \quad dx = 6t - 3t^2\, dt$

Integrating taking lower limits as x = 0 and t = 0

$$\int_{0}^{x} dx = \int_{0}^{t} 6t - 3t^2\, dt \quad \therefore \quad x = 3t^2 - t^3 \quad ..... (3)$$

$\therefore$ at = t = 3 sec, $x = 3(3)^2 - 3^3$

or position $x_3 = 0$ ..... **Ans.**

Since distance travelled in 3 sec is also asked, we need to find whether the particle reverses its sense of motion during the 3 sec motion. For a particle to reverse, its velocity should first become zero. Therefore equating v = 0.

$\therefore \quad v = 6t - 3t^2 = 0$

Or t = 0 and t = 2 sec.

$\therefore$ at t = 2 sec, the particle reverses its sense of motion.

Position calculation

at t = 0 $\quad x_0 = 0$ .....given

at t = 2 $\quad x_2 = 3 \times 2^2 - 2^3 = 4$ m

at t = 3 $\quad x_3 = 0$ ..... already found

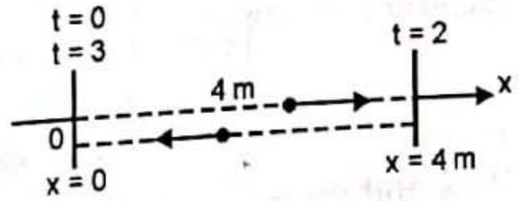

Total distance travelled in 3 sec = 4 + 4 = 8 m ..... **Ans.**

Also average speed $= \frac{\text{Total Distance}}{\text{Total Time}} = \frac{8}{3} = 2.67$ m/s ..... **Ans.**

Ex. 9.12 The acceleration of a particle performing rectilinear motion is given by $a = -0.05\, v^2$ m/s². Knowing that v = 20 m/s at x = 0 find, a) The position of the particle at v = 15 m/s b) The particle's acceleration at x = 50 m. ***(MU May 13)***

Solution: (a) Given $a = f(v)$ $\therefore$ $a = -0.05v^2$ ..... (1)

Let us find $x = f(v)$

using $a = \frac{vdv}{dx}$ $\therefore$ $\frac{vdv}{dx} = -0.05v^2$ $\therefore$ $\frac{vdv}{-0.05v^2} = dx$

Integrating taking lower limits $v = 20$ m/s and $x = 0$

$$\int_{20}^{v} -20\frac{1}{v}dv = \int_{0}^{x} dx \quad \therefore \quad -20[\log_e v]_{20}^{v} = [x]_0^x$$

$$\therefore \quad -20[\log_e v - \log_e 20] = x \quad \text{or} \quad x = -20\log_e\left(\frac{v}{20}\right) \quad .....(2)$$

Substituting $v = 15$ m/s in above equation

$x = 5.745$ m ..... **Ans.**

(b) Substituting $x = 50$ m in equation (2)

$$50 = -20\log_e\left(\frac{v}{20}\right)$$

$$\log_e\left(\frac{v}{20}\right) = -2.5 \quad \therefore \quad \frac{v}{20} = e^{-2.5} \quad \therefore \quad v = 1.642 \text{ m/s}$$

Substituting $v = 1.642$ m/s in equation (1)

$a = -0.05\,(1.642)^2$ $\therefore$ $a = -0.1348$ m/s² ..... **Ans.**

Ex. 9.13 The acceleration of a particle in rectilinear motion is given by $a = 100 - 3x^2$ m/s². Knowing at $t = 0$, $v = 0$ and $x = 0$ find,
(a) at what position the velocity is zero (b) the velocity at $x = 8$ m (c) at what position the particle acquires maximum velocity.

Solution: (a) Given $a = f(x)$

$a = 100 - 3x^2$ m/s² ..... (1)

Let us find $v = f(x)$

using $a = v\frac{dv}{dx}$ $\therefore$ $v\frac{dv}{dx} = 100 - 3x^2$ $\therefore$ $v\,dv = 100 - 3x^2.dx$

Integrating taking lower limits as $v = 0$ and $x = 0$

$$\int_0^v vdv = \int_0^x 100 - 3x^2.dx \quad \therefore \quad \frac{v^2}{2} = 100x - x^3$$

$$v^2 = 200x - 2x^3 \quad .....(2)$$

To find the position at zero velocity, put $v = 0$

$0 = 200x - 2x^3$

or $x = 0,\ x = \pm 10$ m

The particle acquires zero velocity at three positions

i.e at $x = 0$, $x = +10$ m, $x = -10$ m ..... **Ans.**

(b) Put $x = 8$ m in equation (2)

$v^2 = 200\,(8) - 2\,(8)^3$ $\therefore$ $v = \pm 24$ m/s ..... **Ans.**

(c) For maximum or minimum velocity, acceleration becomes zero $\therefore$ put $a = 0$

$a = 100 - 3x^2$

$\therefore$ $0 = 100 - 3x^2$ $\therefore$ $x = \pm 5.774$ m

Put $x = +5.774$ m in equation (2), We get $v = 27.74$ m/s

Put $x = -5.774$ m in equation (2), We get a complex value

$\therefore$ Velocity is maximum at $x = +5.774$ m and $v_{max} = 27.74$ m/s ..... **Ans.**

Exercise 9.2

P1. The rectilinear motion of a particle has its position defined by the relation $x = t^3 - 7t^2 + 20t - 10$ m. Determine, a) Position, velocity and acceleration at $t = 2$ sec. (b) Minimum velocity and the corresponding time.

P2. The motion of a particle moving in straight line is given by a relation $s = t^3 - 3t^2 + 2t + 5$ where 's' is the displacement in metres and 't' is time in seconds. Determine (i) velocity and acceleration after 4 sec. (ii) maximum or minimum velocity and corresponding displacement and (iii) time at which velocity is zero. ***(M. U. May 09)***

P3. The position of a particle moving along a straight line is defined by the relation $x = t^3 - 9t^2 + 15t + 18$ where x is expressed in meters and t in seconds. Determine the time, position and acceleration of the particle when its velocity becomes zero. ***(VJTI Nov 09)***

P4. The car at origin starts from the rest and moves in a straight line such that for a short time its velocity is defined by $v = (9t^2 + 2t)$ m/s, where t is in seconds. Determine its position and acceleration when $t = 3$ sec. ***(MU Dec 12)***

P5. Acceleration of a particle is directly proportional to the square of time t. When $t = 0$, particle is at $x = 24$ m. Knowing that at $t = 6$ sec, $x = 96$ m and $v = 18$ m/s, find expressions of x and v in terms of t. Also find velocity and position at $t = 2$ sec. ***(MU Dec 07)***

P6. The acceleration of a particle is given by $a = -kx^{-3}$ m/s². Knowing at $x = 2$ m, $v = 0$ and at $x = 0.5$ m, $v = 3$ m/s. Determine a) the value of k b) the particle's velocity at $x = 1$ m.

P7. The acceleration of an oscillating particle is defined by the relation $a = -kx$ m/s². Determine a) the value of k such that $v = 12$ m/s at $x = 2$ m and $v = 0$ at $x = 6$ m b) velocity at $x = 4$ m c) maximum velocity.

P8. A particle performing rectilinear motion starts from rest from origin and has its acceleration defined by $a = 25 - v^2$ m/s². Determine the time and the particle's displacement, when $v = 4$ m/s.

P9. A particle moving in the + ve x direction has an acceleration $a = 100 - 4v^2$ m/s^2. Determine the time interval and displacement of a particle when speed changes from 1 m/s to 3 m/s. ***(MU Dec 12)***

P10. The motion of a particle is defined by the relation a = 0.8 t m/s^2. It is found that at x = 5 m, v = 12 m/s when t = 2 sec. Find position & velocity at t = 6 sec. ***(KJS May 15)***

P11. The velocity relation of a rectilinear moving particle is defined as v = 4 t^2 – 3t – 1 m/s. At t = 0, x = – 4m. Determine

a) the time at which the particle reverses its sense of motion

b) At t = 3 sec. i) acceleration ii) position iii) displacement iv) distance traveled.

P12. A particle starting from rest moves in a straight line, whose acceleration is given by a = 8 – 0.003s^2, where a is in m/s^2 and s is in meters. Determine

i. Velocity of the particle when it has traveled 40m and

ii. Distance traveled by the particle when its comes to rest ***(VJTI May 06)***

P13. A point moves along a straight line such that its displacement is s = 8t^2 + 3t where s is in m and t is in seconds. Find the displacement and velocity at t = 4 sec. Also find the distance traveled in the 10th second and the change in velocity from t = 4 sec till t = 10 sec. ***(VJTI May 08)***

P14. The acceleration of the particle is defined by the relation a = 25 – 3x^2 mm/s^2. The particle starts with no initial velocity at the position x = 0. (a) Determine the velocity when x = 2mm (b) the position when velocity is again zero, (c) position where the velocity is maximum and the corresponding maximum velocity. ***(M.U Dec 10)***

P15. Acceleration of particle is given by $a = 90 - 6x^2$ cm/s^2 where x is in cm. If particle starts with zero initial velocity from origin determine velocity when x = 5 cm, position where velocity is again zero, position where velocity is again maximum. ***(KJS Nov 15)***

P16. A particle performing rectilinear motion has its acceleration given by a = (2 – 5 t) m/s^2. At t = 4 sec its velocity is 15 m/s and at t = 8 sec its position is 60 m. Find at t = 0, the particles position, velocity and acceleration.

P17. A stone is projected from the ground vertically up with an initial velocity of 20 m/s. a) Knowing that the air resistance causes an additional deceleration of 0.01v^2 m/s^2, determine the maximum height reached by stone above the ground.
(Hint: a = – 9.81 – 0.01v^2 m/s^2)
b) solve for maximum height if air resistance is neglected.

P18. A particle starting from the origin with an initial velocity u and travelling in a straight path has an accelerating of (5t + 6) m/s^2. The position of the particle at t = 2 sec is 10 m. Calculate the particles initial velocity u and its position at t = 4 sec.

P19. The acceleration of a vehicle at any instant is given by the expression $a = \left(\frac{10}{v^2+4}\right)$ m/s^2. If the vehicle starts from rest, find its velocity when its displacement is 125 m. Also find its displacement when its velocity is 10 m/s.

P20. A particle moves in along a straight line with acceleration $a = \frac{-8}{s^2}$ m/s^2. At t = 1 s, s = 4 m and v = 2 m/s. Determine acceleration where t = 3 sec. ***(SPCE Mar 11)***

P21. Acceleration of a particle moving along a straight line is represented by the relation $a = 30 - 4.5x^2$ m/s^2. The particle starts with zero initial velocity at x = 0. Determine (a) The velocity when x = 3 m, (b) the position when the velocity is again zero (c) the position when the velocity is maximum. ***(MU Dec 14)***

P22. A particle starts from rest from origin and its acceleration is given by, $a = \frac{k}{(x+4)^2}$ m/s^2. Knowing that v = 4 m/s when x = 8 m, find

(i) Value of k and

(ii) Position when v = 4.5 m/s. ***(M.U Dec 16)***

P23. The acceleration of a particle is defined by the relation a = k[1 – e^{-x}] Knowing that v = 6 m/s when x = –2 m and particle comes to rest at origin. Determine,

(a) value of k (b) velocity of the particle when x = –1 m. ***(NMIMS July 16)***

9.9 Curvilinear Motion

A particle which travels on a curved path is said to be performing curvilinear motion. Figure shows a particle P moving on a curved path. Let us understand the terms viz. position, velocity and acceleration of a particle performing curvilinear motion.

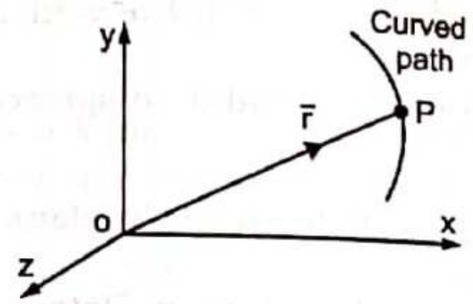

Fig. 9.4

Position: It is represented by a position vector $\bar{r}$ which extends from the origin of the fixed reference axis to the particle. It describes the location of the particle w.r.t the origin. As the particle travels along the curved path, the value of $\bar{r}$ keeps on changing.

Velocity: Let a particle occupying position P move to P' as the particle performs curvilinear motion. Simultaneously the position vector $\bar{r}$ also moves to $\bar{r}'$. Let the time interval be Δt.

The vector joining P and P' is the change in position vector $\Delta r'$ during the time interval Δt.
The average velocity is

$$v_{AV} = \frac{\Delta \bar{r}}{\Delta t}$$

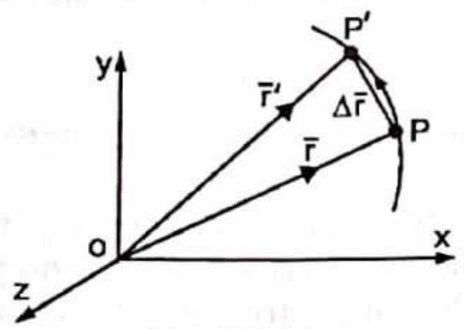

Fig. 9.5 (a)

If the time interval is made smaller, the point P' will come closer to P and therefore for the limit $\Delta t \to 0$, the vector Δr would be tangent to the path at P. The average velocity now becomes instantaneous velocity at P

$$\lim_{\Delta t \to 0} \frac{\Delta \bar{r}}{\Delta t}$$

$$\therefore \mathbf{v} = \frac{\mathbf{dr}}{\mathbf{dt}} \quad \text{.....[9.9(a)]}$$

Thus as shown in figure 9.5 (b), velocity of a particle performing curvilinear motion is always tangent to the curved path at every moment.

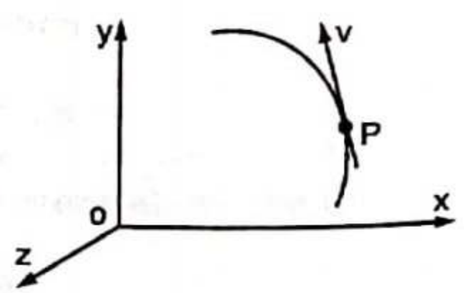

Fig. 9.5 (b)

Acceleration: Since the direction of velocity is continuously changing in a curvilinear motion, it results in acceleration being present at every instant.

Let the velocity of the particle at position P be v and at position P' be v' then, the average acceleration is given by

$$a_{av} = \frac{\overline{\Delta v}}{\Delta t}$$

Making Δt smaller and smaller results in instantaneous acceleration.

$$a = \lim_{\Delta t \to 0} \frac{\overline{\Delta v}}{\Delta t}$$

or $$\mathbf{a} = \frac{\mathbf{dv}}{\mathbf{dt}} \quad \text{.....[9.9(b)]}$$

The acceleration vector can be at any angle as shown.

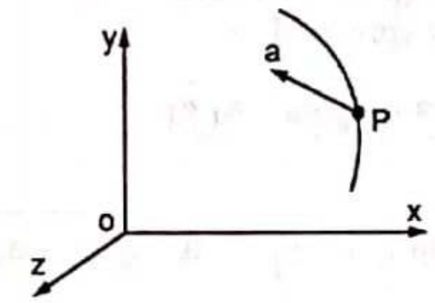

Fig. 9.6

9.9.1 *Curvilinear Motion – Rectangular System*

Curvilinear motion can be split into motion along x direction, y direction and z direction, which can be independently worked as three rectilinear motions along the x, y and z direction. For a curvilinear motion we therefore write position, velocity and acceleration in the vector form as

$$\bar{r} = \mathbf{x\,i + y\,j + z\,k} \quad \text{and magnitude} \quad r = \sqrt{x^2 + y^2 + z^2} \quad \text{.....[9.10 (a)]}$$

$$\bar{v} = \frac{\mathbf{dr}}{\mathbf{dt}} = \mathbf{v_x\,i + v_y\,j + v_z\,k} \quad \text{and magnitude} \quad v = \sqrt{v_x^2 + v_y^2 + v_z^2} \quad \text{.....[9.10 (b)]}$$

$$\bar{a} = \frac{\mathbf{d\bar{v}}}{\mathbf{dt}} = \mathbf{a_x i + a_y j + a_z k} \quad \text{and magnitude} \quad a = \sqrt{a_x^2 + a_y^2 + a_z^2} \quad \text{.....[9.10 (c)]}$$

For a particle moving in the xy plane, its rectangular components are shown. Refer figure.

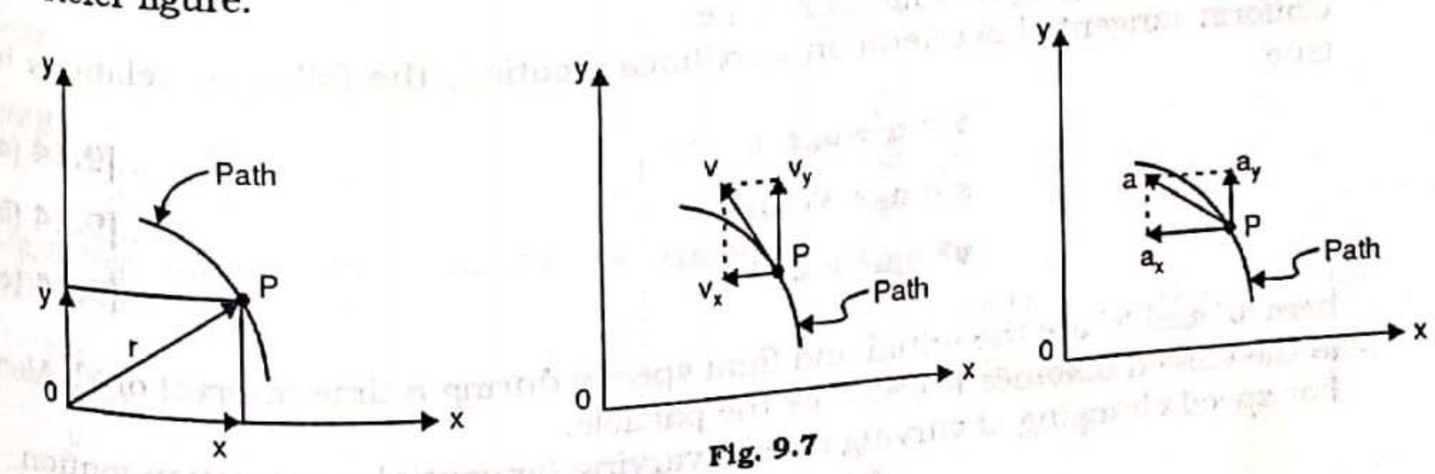

Fig. 9.7

9.9.2 Curvilinear Motion – N – T System

In a curvilinear motion the acceleration vector can also be split along the tangent to the path and normal to the path.

The acceleration vector is therefore expressed as

$$\bar{a} = a_n \bar{e}_n + a_t \bar{e}_t \qquad .....[9.11]$$

or $$a = \sqrt{a_n^2 + a_t^2}$$

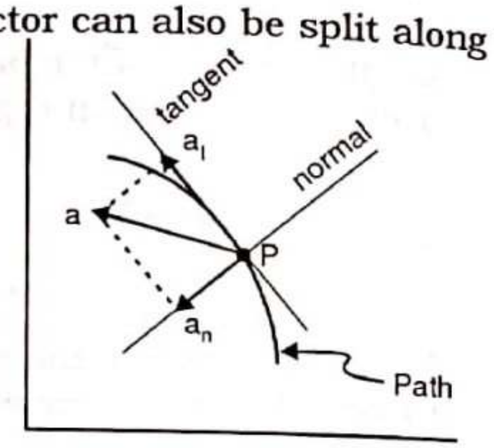

Fig. 9.8

a_n, the *normal component of acceleration* represents the change in direction of motion and is always directed towards the centre of curvature. Its magnitude is given by

$$a_n = \frac{v^2}{\rho} \qquad .....[9.12]$$

where v is the speed at the instant and ρ is the radius of curvature

For circular curves ρ is the radius of the circle.

For curves which are defined as y = f (x),

$$\rho = \frac{\left[1 + \left(\frac{dy}{dx}\right)^2\right]^{3/2}}{\frac{d^2y}{dx^2}} \qquad .....[9.13]$$

a_t, the *tangential component of acceleration* represents the change in speed of the particle. The direction of a_t is positive (along velocity vector) or negative (opposite to velocity vector) depending on whether the speed is increasing or decreasing.

For Uniform Speed Curvilinear motion $a_t = 0$

For speed changing at uniform rate i.e.,

Uniform tangential acceleration curvilinear motion, the following relations hold true

$$v = u + a_t.t \qquad .....[9.14\ (a)]$$

$$s = u_t + \tfrac{1}{2} a_t.t^2 \qquad .....[9.14\ (b)]$$

$$v^2 = u^2 + 2\, a_t.s \qquad .....[9.14\ (c)]$$

here 'u' and 'v' are the initial and final speeds during a time interval of 't'. Also 's' is the curved distance traveled by the particle.

For speed changing at varying rate i.e varying tangential acceleration motion,

$$a_t = \frac{dv}{dt} \qquad .....[9.15]$$

9.9.3 Relation between Rectangular and N – T components of Acceleration

We may sometimes be required to find the N – T components of acceleration i.e a_n and a_t knowing the rectangular components of acceleration i.e a_x and a_y. This can be done using the relation given below, which is

$$\rho = \left| \frac{v^3}{a_x v_y - v_x a_y} \right| \qquad .....[9.16]$$

From the above relation radius of curvature ρ can be calculated and hence a_n and a_t can be found out.

Ex. 9.14 The position vector of a particle which moves in the x – y plane is given by $\bar{r} = (3t^3 - 4t^2)\, i + (0.5\, t^4)\, j$ m. Calculate velocity and acceleration at t = 5 sec

Solution: The particle performs curvilinear motion. Working in rectangular system

x direction

$x = 3t^3 - 4t^2$ m

$$v_x = \frac{dx}{dt} = 9t^2 - 8t \text{ m/s}$$

$$a_x = \frac{dv_x}{dt} = 18t - 8 \text{ m/s}^2$$

y direction

$y = 0.5\, t^4$ m

$$v_y = \frac{dy}{dt} = 2t^3 \text{ m/s}$$

$$a_y = \frac{dv_y}{dt} = 6t^2 \text{ m/s}^2$$

$\therefore \quad \bar{v} = (9t^2 - 8t)\, i + (2t^3)\, j$ m/s ..... General relation

also $\quad \bar{a} = (18t - 8)\, i + (6t^2)\, j$ m/s² ..... General relation

To find velocity and acceleration at t = 5 sec, substitute t = 5, we get

$\bar{v} = 185\, i + 250\, j$ m/s ..... **Ans.**

$\bar{a} = 82\, i + 150\, j$ m/s² ..... **Ans.**

Ex. 9.15 The curvilinear motion of a particle is defined by $v_x = 25 - 8t$ m/s and $y = 48 - 3t^2$ m. Knowing at t = 0, x = 0, find at time t = 4 sec, the position, velocity and acceleration vectors. Also find the corresponding magnitudes. ***(MU May 13)***

Solution: For the given curvilinear moving particle, working in rectangular system.

x direction

Given $\quad v_x = 25 - 8t$ ..... (1)

using $\quad v_x = \frac{dx}{dt} = 25 - 8t$

$dx = 25 - 8t.dt$

Integrating taking lower limits as x = 0 and t = 0

$$\int_0^x dx = \int_0^t 25 - 8t.dt$$

$x = 25t - 4t^2$ .....(2)

y direction

$y = 48 - 3t^2$ .....(a)

using $v_y = \frac{dy}{dt}$

using $a_y = \frac{dv_y}{dt}$

$v_y = -6t$ m/s .....(b)

$a_y = -6$ m/s² .....(c)

also $a_x = \frac{dv_x}{dt}$

$\therefore \quad a_x = -8 \ m/s^2$ .....(3)

To find position, velocity and acceleration at t = 4 sec

Substituting t = 4 in equation (2) and equation (a) we get

$x = 36$ m, $y = 0$

$\therefore \quad \bar{r} = 36i + 0j$ m .....**Ans.**

also $\quad r = 36$ m .....**Ans.**

Substituting t = 4 in equation (1) and equation (b) we get,

$v_x = -7$ m/s, $v_y = -24$ m/s

$\therefore \quad \bar{v} = -7i - 24j$ m/s ..... **Ans.**

also $\quad v = 25$ m/s .....**Ans.**

From equations (3) and (c), we find that the acceleration is constant in x and y direction

$\therefore \quad \bar{a} = -8i - 6j \ m/s^2$ ..... **Ans.**

also $\quad a = 10 \ m/s^2$ ..... **Ans.**

Ex. 9.16 A particle travels on a curved path $\frac{x^2}{4} - 2y^2 = 24$. If the x component of velocity is v_x = 6 m/s and remains constant, determine the particle's velocity and acceleration at x = 16 m.

Solution: For x = 16 m, y = 4.472 m

Given $\frac{x^2}{4} - 2y^2 = 24$ .....Equation of path

Differentiate the above equation w.r.t time

$$\frac{1}{4}(2x)\frac{dx}{dt} - 4.y.\left(\frac{dy}{dt}\right) = 0$$

$$0.5x(v_x) - 4y.v_y = 0 \qquad \text{..... (1)}$$

Differentiate again w.r.t time

$$0.5\left[x.\frac{dv_x}{dt} + v_x.\frac{dx}{dt}\right] - 4\left[y.\frac{dv_y}{dt} + v_y.\frac{dy}{dt}\right] = 0 \qquad \text{..... (2)}$$

$$0.5\left[x.a_x + v_x^2\right] - 4\left[y.a_y + v_y^2\right] = 0 \qquad \text{..... (3)}$$

To find velocity and acceleration at x = 16 m

Substitute x = 16 m, y = 4.472 m, v_x = 6 m/s in equation (1)

$$0.5 \times 16 \times 6 - 4(4.472)v_y = 0$$

$\therefore \quad v_y = 2.683$ m/s

$\therefore \quad v = \sqrt{6^2 + 2.683^2} = 6.573$ m/s.....**Ans.**

Substitute x = 16 m, y = 4.472 m, v_x = 6 m/s, v_y = 2.683 m/s, a_x = 0 in equation (2)

$$0.5\left[0 + 6^2\right] - 4\left[4.472 \times a_y + 2.683^2\right] = 0$$

$$a_y = -0.603 \ m/s^2$$

$\therefore \quad a = \sqrt{0 + 0.603^2} = 0.603 \ m/s^2$.....**Ans.**

Ex. 9.17 A particle moves in a circular path of 4 m radius. Calculate 4 sec later the particle's total acceleration and distance traveled if,

a) speed is constant at 2 m/s

b) speed is 2 m/s at the instant and is increasing at a rate of 0.7 m/s².

Solution: a) Speed is constant at 2 m/s i.e $a_t = 0$

also $\quad a_n = \frac{v^2}{\rho} = \frac{2^2}{4} = 1 \ m/s^2$

Using $\quad a = \sqrt{a_n^2 + a_t^2}$

$\therefore \quad a = 1 \ m/s^2$ ..... **Ans.**

This is a case of curvilinear motion with uniform speed.

To calculate distance traveled, using

$$v = \frac{s}{t}$$

$$2 = \frac{s}{4} \qquad \therefore s = 8 \text{ m}$$ .....**Ans.**

b) Speed is increasing at 0.7 m/s² i.e a_t = 0.7 m/s²

This is a case of curvilinear motion with uniform tangential acceleration

u = 2 m/s

v = ?

s = ?

a_t = 0.7m/s²

t = 4 sec

using $\quad v = u + a_t \times t$

v = 2 + 0.7× 4

v = 4.8 m/s

using $\quad s = ut + ½ a_t \times t^2$

$s = 2 \times 4 + ½ \times 0.7 \times (4)^2$ ..... **Ans.**

s = 13.6 m

Now $\quad a_n = \frac{v^2}{\rho} = \frac{(4.8)^2}{4} = 5.76 \ m/s^2$

$\therefore$ total acceleration = $a = \sqrt{(5.76)^2 + (0.7)^2}$ ..... **Ans.**

$a = 5.802 \ m/s^2$

Ex. 9.18 A car starts from rest at t = 0 on a circular curve of 300 m radius. The speed of the car is uniformly increased to 54 kmph in 60 sec. Determine the normal and tangential components of acceleration and the distance traveled at t = 120 sec.

Solution: The car is in curvilinear motion with uniform tangential acceleration.

Motion 0 – 60 sec

$u = 0$
$v = 54 \text{ kmph} = 15 \text{ m/s}$
$s = -$
$a_t = ?$
$t = 60 \text{ sec.}$

using $v = u + a_t \times t$
$15 = 0 + a_t \times 60$
$a_t = 0.25 \text{ m/s}^2$ ..... **Ans.**

Motion 0 – 120 sec

$u = 0$
$v = ?$
$s = ?$
$a_t = 0.25 \text{ m/s}^2$
$t = 120 \text{ sec}$

using $v = u + a_t \times t$
$v = 0 + 0.25 \times 120$
$v = 30 \text{ m/s}$

Now $a_n = \dfrac{v^2}{\rho} = \dfrac{(30)^2}{300} = 3 \text{ m/s}^2$ .....**Ans.**

using $v^2 = u^2 + 2\, a_t \times s$
$(30)^2 = 0 + 2 \times 0.25 \times s$
$s = 1800 \text{ m}$ ..... **Ans.**

Ex. 9.19 An airplane travels on a curved path. At P it has a speed of 360 kmph which is increasing at a rate of 0.5 m/s². Determine at P
a) the magnitude of total acceleration.
b) angle made by the acceleration vector with the positive x axis. Refer figure.

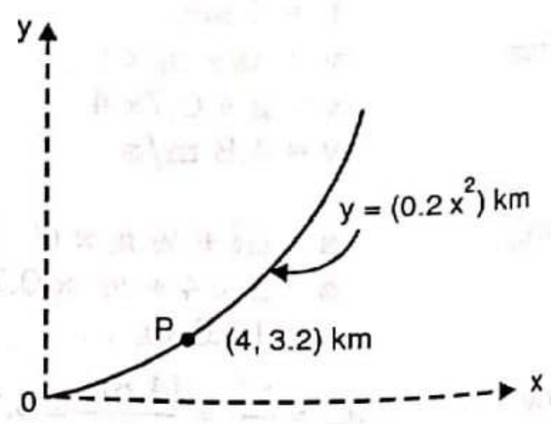

Solution: Given equation of path as $y = 0.2\, x^2$

$\dfrac{dy}{dx} = 0.4x \qquad \left(\dfrac{dy}{dx}\right)_{x=4km} = 1.6$

$\dfrac{d^2y}{dx^2} = 0.4 \qquad \left(\dfrac{d^2y}{dx^2}\right)_{x=4km} = 0.4$

using $\rho = \dfrac{\left[1 + \left(\dfrac{dy}{dx}\right)^2\right]^{3/2}}{\dfrac{d^2y}{dx^2}} = \dfrac{\left[1 + (1.6)^2\right]^{3/2}}{0.4} = 16.792 \text{ km} \quad \therefore \quad \rho = 16792 \text{ m}$

Now $a_n = \dfrac{v^2}{\rho} = \dfrac{(100)^2}{16792} = 0.595 \text{ m/s}^2$

also $a_t = 0.5 \text{ m/s}^2$ .....given

$\therefore$ total acceleration $a = \sqrt{a_n^2 + a_t^2} \quad \therefore \quad a = 0.777 \text{ m/s}^2$ .....**Ans.**

Let θ be the angle made by the acceleration vector with the tangent at x = 4 km.

$\tan\theta = \dfrac{a_n}{a_t} = \dfrac{0.595}{0.5} \quad \therefore \quad \theta = 50°$

Let α be the angle made by the tangent with the x axis then

$\tan\alpha = \dfrac{dy}{dx} \quad \therefore \quad \tan\alpha = 1.6 \quad \therefore \quad \alpha = 58°$

The total angle made by the acceleration vector with the positive x axis
= 50 + 58 = 108° ..... **Ans.**

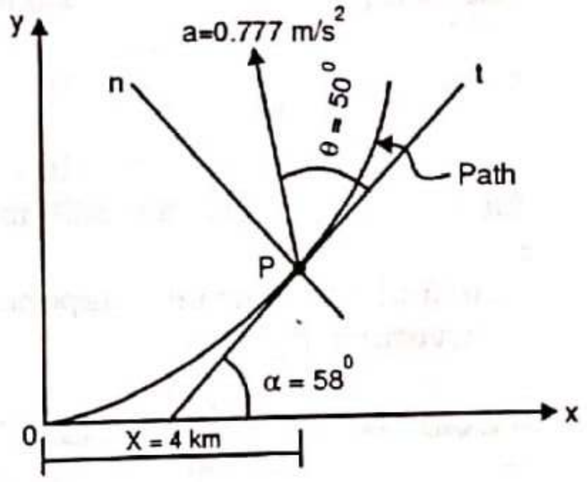

Ex. 9.20 The position vector of a particle is given by $\bar{r} = \frac{1}{4} t^3\, i + 3\, t^2\, j$ m. Determine at t = 2 sec
a) the radius of curvature of the path
b) the N – T components of acceleration *(VJTI Apr 17)*

Solution: Given position $\bar{r} = \frac{1}{4} t^3\, i + 3\, t^2\, j$ m

velocity $\bar{v} = \dfrac{d\bar{r}}{dt} = \dfrac{3}{4}.t^2\, i + 6t\, j \text{ m/s}$

acceleration $\bar{a} = \dfrac{d\bar{v}}{dt} = 1.5t\, i + 6\, j \text{ m/s}^2$

at $t = 2$ sec
$\bar{v} = 3i + 12j \text{ m/s} \quad \therefore v = 12.369 \text{ m/s}$
$\bar{a} = 3i + 6j \text{ m/s}^2 \quad \therefore \quad a = 6.708 \text{ m/s}$

using the relation for radius of curvature

$\rho = \left|\dfrac{v^3}{a_x v_y - v_x a_y}\right| \quad \therefore \quad \rho = \left|\dfrac{12.369^3}{3 \times 12 - 3 \times 6}\right|$ or $\rho = 105.1 \text{ m}$ ..... **Ans.**

using $a_n = \dfrac{v^2}{\rho} = \dfrac{(12.369)^2}{105.1} = 1.456 \text{ m/s}^2$ ..... **Ans.**

also $a_t = \sqrt{a^2 - a_n^2} = \sqrt{(6.708)^2 - (1.456)^2} \quad \therefore \quad a_t = 6.548 \text{ m/s}^2$ ..... **Ans.**

Ex. 9.21 A point moves along a curved path $y = 0.4x^2$. At $x = 2$ m its speed is 6 m/s increasing at 3 m/s². At this instant find

a) velocity components along x and y direction b) its acceleration.

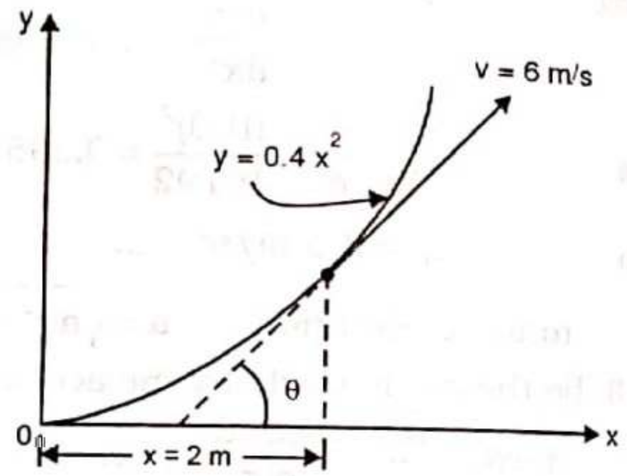

Solution: We know that velocity is always tangent to the path.

The slope of any tangent to a curve defined as $y = f(x)$ is given by

$$\tan\theta = \frac{dy}{dx}$$

here equation of path of curve is

$$y = 0.4x^2$$

$$\frac{dy}{dx} = 0.8x \quad \therefore \quad \left(\frac{dy}{dx}\right)_{x=2m} = 0.8 \times 2 = 1.6$$

$\therefore$ $\tan\theta = 1.6$ or $\theta = 58°$

$\therefore$ $v_x = 6\cos 58 = 3.18$ m/s→ ..... **Ans.**

and $v_y = 6\sin 58 = 5.09$ m/s↑ ..... **Ans.**

To find the normal component of acceleration we are required to find the radius of curvature ρ

from above $\frac{dy}{dx} = 0.8x$ and $\frac{d^2y}{dx^2} = 0.8$

using $$\rho = \frac{\left[1+\left(\frac{dy}{dx}\right)^2\right]^{3/2}}{d^2y/dx^2} \quad \therefore \quad \rho_{x=2} = \frac{\left[1+(1.6)^2\right]^{3/2}}{0.8} = 8.396 \text{ m}$$

using $$a_n = \frac{v^2}{\rho} = \frac{6^2}{8.396} = 4.288 \text{ m/s}^2$$ also $a_t = 3$ m/s² ...given

$\therefore$ $$a = \sqrt{(4.288)^2 + (3)^2} = 5.233 \text{ m/s}^2$$ ..... **Ans.**

Excersise 9.3

P1. A curvilinear motion is defined by $y = 8t^3 - 6t$ m and $a_x = 4t$ m/s². At $t = 1$ sec, $v_x = 6$ m/s. Calculate magnitude of velocity and acceleration at $t = 3$ sec.

P2. The y coordinate of a particle is given by $y = 4t^3 - 3t$. $a_x = 12t$ m/s², $v_x = 4$ m/s at $t = 0$. Calculate magnitude of velocity and acceleration of particle when $t = 1$ sec. ***(NMIMS July 16)***

P3. A particle starting from rest at the position (5, 6, 2) m accelerates at $\bar{a} = 6t\,\bar{i} - 24t^2\,\bar{j} + 10\,\bar{k}$ m/s². Determine the acceleration, velocity, position and displacement of the particle at the end of 2 seconds. ***(MU Dec 09)***

P4. A particle performing curvilinear motion has velocity components given as $v_x = 32t - 4$ m/s and $v_y = 4$ m/s. At $t = 3$ sec it occupied the position (5, 12) m. Determine the equation of the path traced by the particle.

P5. If $x = 1 - t$ and $y = t^2$ where x and y are in metres and 't' is in sec, determine x and y components of velocity and acceleration. Also write equation of the path. ***(M. U. May 09)***

P6. A particle moves along a curved path defined by $y = {}^1/_8\, x^2$. At any instant its x coordinate is given by $x = 2t^2 - 4t$. Determine its velocity and acceleration at $x = 8$ m.

P7. In a curvilinear motion particle P moves along the fixed path $9y = x^2$, where x and y are expressed in cm. At any instant t, the x coordinate of P is given by $x = t^2 - 14t$. Determine y component of velocity and acceleration of P when $t = 15$ sec. ***(KJS Nov 15)***

P8. A particle travels along the path defined by the parabola $y = 0.5x^2$. If the x component of velocity is $v_x = 5t$ m/s, determine the distance of particle from the origin 0 and the magnitude of acceleration when $t = 1$ sec. At $t = 0$, $x = 0$ and $v = 0$. ***(M.U May 11, KJS Dec 17)***

P9. A particle P moves in a circular path of 4 m radius. At an instant the speed is increasing at a rate of 8 m/s² and its total acceleration is 10 m/s². Determine the particle's speed at this instant.

P10. A racing car traveling on a circular curve ABC of 400 m radius increases its speed uniformly from 72 kmph at A to 108 kmph at C over a distance of 300 m along the curve. What was the total acceleration of the car when it was at B, 250 m from A. Also find the total acceleration of the car when it was at A and at C.

P11. A train enters a curve of radius 500 m with a speed of 60 kmph. Determine magnitude of total deceleration at the instant the brakes are applied so that the train stops by covering a distance of 400 m along the curve. Also determine the time required by the train to come to rest.

P12. The motion of a particle is defined by the position vector $\bar{r} = 6t\,i + 4t^2\,j$ where r is in metres and t is in seconds. At the instant when $t = 3$ sec, find (i) Tangential and Normal components of accelerations (ii) Radius of curvature. ***(M.U May 11)***

P13. The position of a particle is given by $\bar{r} = t^3\,\bar{i} + t^4\,\bar{j}$ m. For $t = 1$ sec, determine (i) the acceleration of the particle in rectangular components (ii) its normal and tangential acceleration and (iii) the radius of curvature of the path. ***(M.U May 08)***

P14. A particle travels along a parabolic shaped track $y = 10 + 0.4x^2$ with a constant speed of 6 m/s. At $x = 3$ m, find a) acceleration b) components of velocity.

P15. A point moves along a path $y = \frac{x^2}{3}$ with a constant speed of 8 m/s. What are the x and y components of its velocity when $x = 3$ m ? What is the acceleration of the point at this instant? ***(MU Dec 12, May 14, KJS May 15)***

P16. A particle travels on a circular path, whose distance travelled is defined by $s = (0.5t^3 + 3t)$m. If the total acceleration is 10 m/s², at t = 2 sec, find its radius of curvature. ***(MU Dec 15)***

P17. A particle travels along a cubic curve $y = 0.2x^3$. At a position y = 5.4 m its speed was 5 m/s and decreasing at a rate of 0.8 m/s². Find a) At this instant the particle's total acceleration b) velocity components along x and y directions. c) time when the particle comes to rest.

P18. A car travels along a depression in a road, given by $x^2 = 180y$. The speed of the car is constant and equal to 54 km/hr. Find the radius of curvature and acceleration when the car is at the deepest point in the depression. ***(VJTI May 06)***

P19. An airplane travels along a path such that its acceleration is given by $\bar{a} = 10\,i + 6t\,j$ m/s². If the plane starts from rest from the origin, determine at t = 4 sec. a) speed of the airplane b) radius of curvature of the path c) position of the airplane.

P20. A rocket follows a path such that its acceleration is given by $\bar{a} = (4i + tj)$m/s². At $\bar{r} = 0$, it starts from rest. At t = 10 sec. determine-
a) Speed of the rocket b) Radius of curvature of its path, c) a_n and a_t components of acceleration. d) Position of the rocket ***(M.U Dec 08, VJTI Dec 16)***

P21. A particle moves in the x–y plane with acceleration components $a_x = -5$ m/s² and $a_y = 2$ m/s². If at t = 0, its velocity is 10 m/s directed at 36.87° with the + ve x-axis, find the radius of curvature at t = 8 sec and the corresponding normal and tangential components of acceleration.

P22. A particle is moving in x–y plane and its position is defined by $\bar{r} = \left(\frac{3}{2}t^2\right)i + \left(\frac{2}{3}t^3\right)j$. Find radius of curvature when t = 2 sec. ***(MU Dec 07, Dec 17)***

P23. a) A particle moves in x – y plane and its position is given by $\bar{r} = (6t)\,i + (3t - 4t^2)\,j$ m. Find the radius of curvature of its path and a_n and a_t components of acceleration when it crosses the x axis again.
b) solve for the same conditions given $\bar{r} = (3\,t)\,i + (4\,t - 3\,t^2)\,j$ m. ***(MU Dec 11)***

P24. A particle moves along a track which has a parabolic shape with a constant speed of 10 m/s. The curve is given by $y = 5 + 0.3x^2$. Find the components of velocity and normal acceleration when x = 2 m. ***(M. U. Dec 14)***

9.10 Projectile Motion

A particle freely projected in the air in any direction other than vertical, follows a curved path and this motion is referred to as a projectile motion. The path traced by the projectile is known as its trajectory and is parabolic in nature.

Projectile motion is a curvilinear motion and can be worked using rectangular system i.e splitting the motion along horizontal direction and vertical direction.

Since gravitational force acts in the vertical direction, it is a uniformly accelerated motion in the vertical direction and a uniform velocity motion in the horizontal direction, assuming the air resistance to be negligible.

Figure shows a projectile fired with an initial velocity v_o at an angle θ with the horizontal from the top of the tower at A and of height h. The projectile travels along a parabolic trajectory and reaches the peak at B.

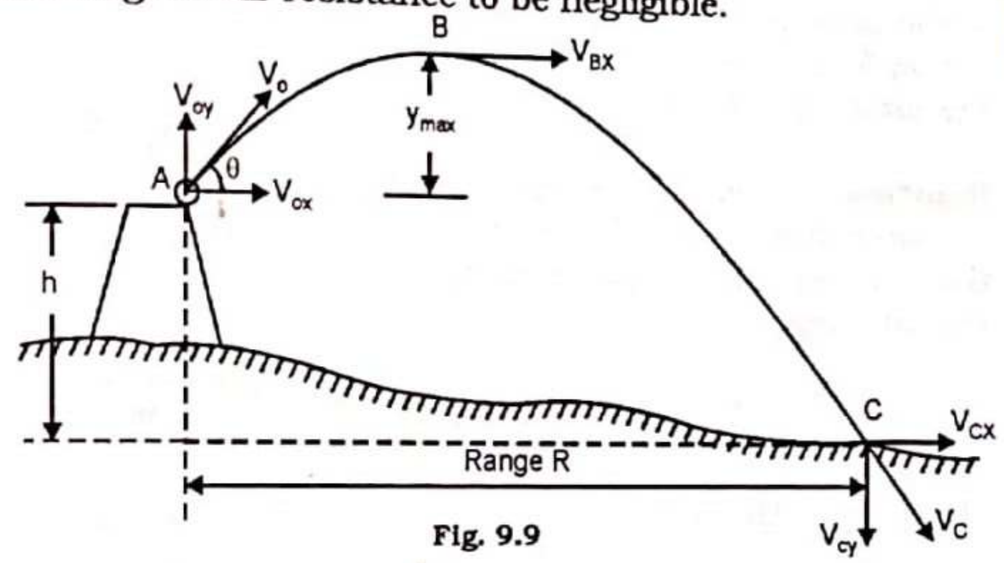

Fig. 9.9

At the peak the vertical components of velocity $v_{By} = 0$. The downward motion now begins and it finally lands with a velocity v_C at C on the ground.

9.10.1 *Procedure to solve projectile problems* [Refer Fig. 9.9]

Step 1: Draw a kinematic diagram showing kinematic parameters (initial velocity, angle of projection, range, time of flight, velocity of landing, vertical displacement) given or asked in the problem.

Step 2: Resolve the initial velocity v_0 into components v_{0x} and v_{0y}. Resolve landing velocity v_C into v_{cx} and v_{cy}.

Step 3: The curvilinear motion is split into horizontal motion (HM) and Vertical motion (VM). Make a table with two columns as shown. The left column (HM) lists the kinematic terms like v, s and t for HM with uniform velocity. The right column (VM) lists the terms u, v, s, a and t for vertical motion with uniform acceleration of a = 9.81 m/s² ↓. Take a sign convention ↑ + ve or ↓ + ve for VM. A sign convention ↑ + ve means all vectors like velocity (u, v), acceleration (a) and displacement (s), acting upwards are + ve.

Projectile Motion (A – C)

HM	VM↑+ve
$v = v_{ox}$	$u = v_{oy}$
$s = R$	$v = -v_{cy}$
$t = t$	$s = -h$
	$a = -9.81 m/s^2$
	$t = t$ sec
Use	Use
$v = \frac{s}{t}$	$v = u + at$
	$s = ut + \frac{1}{2}at^2$
	$v^2 = u^2 + 2as$

Step 4: For HM use kinematic relation v = s/t since horizontal motion is with uniform velocity. For horizontal motion $V_{ox} = V_{Bx} = V_{Cx}$

Step 5: For VM use kinematic relations.

$$v = u + at, \quad s = ut + \frac{1}{2}at^2 \quad \text{and} \quad v^2 = u^2 + 2as$$

The following examples illustrate the solving of projectile motion problems.

Ex. 9.22 From the top of a building 20 m high a ball is projected at 15 m/s at an angle of 30° upwards to the horizontal. At what distance it would hit the ground from the foot of the building. What is the maximum height attained above the ground, the velocity of the ball just as it hits the ground and the total time of flight.

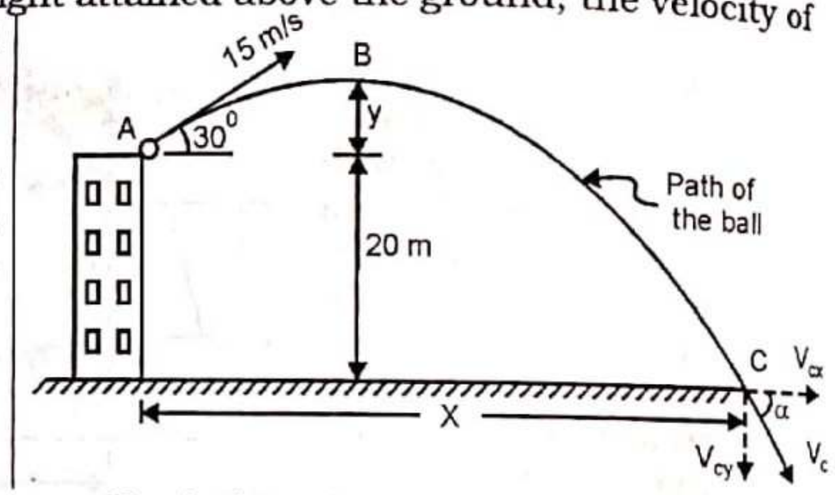

Solution: Refer figure. Let x be the distance from foot of the building. Let the ball reach a height y metres above the building.

Projectile motion (A – B)

Horizontal Motion

Vertical Motion ↑ +ve

$u = 15 \sin 30 = 7.5$ m/s
$v = 0$
$s = y$
$a = -9.81$ m/s²
$t = -$

using $v^2 = u^2 + 2as$

$0 = (7.5)^2 + 2(-9.81)\,y$

$\therefore\ y = 2.867$ m.

Maximum height attained above ground = 2.867 + 20 = 22.867 m ..... **Ans.**

Projectile Motion (A – C)

Horizontal Motion

$v = 15 \cos 30 = 13$ m/s
$s = x$
$t = t$ sec

Using $v = \dfrac{s}{t}$

$13 = \dfrac{x}{t}$ ..... (1)

substituting t = 2.924 sec obtained from vertical motion

x = 38.01 m ..... **Ans.**

Vertical Motion ↑ +ve

$u = 7.5$ m/s
$v = -V_{Cy}$
$s = -20$ m
$a = -9.81$ m/s²
$t = t$ sec

Using $s = ut + \frac{1}{2}at^2$

$-20 = 7.5\,t - \frac{1}{2} \times 9.81 \times t^2$

$\therefore\ t = 2.924$ sec ..... **Ans.**

using $v = u + at$

$-V_{Cy} = 7.5 - 9.81 \times 2.924$

$V_{Cy} = 21.18$ m/s

Velocity of landing at C

Since velocity does not change in the x direction, $V_{Cx} = 13$ m/s →

Also $V_{Cy} = 21.18$ m/s ↓

$$\therefore\quad v_c = \sqrt{(v_{cx})^2 + (v_{cy})^2} = \sqrt{(13)^2 + (21.18)^2} = 24.85 \text{ m/s}$$

$$\text{also}\quad \tan\alpha = \frac{v_{cy}}{v_{cx}} = \frac{21.18}{13} \quad \therefore\quad \alpha = 58.46°$$

$\therefore\ V_C = 24.85$ m/s, $\alpha = 58.46°$ ↘ ..... **Ans.**

Ex. 9.23 A shuttle cock hit with a velocity v_o from point A just crosses the fence at the top of its trajectory at B and lands on the ground at C. Find
a) Initial velocity v_o b) height h of the fence c) Range R to point C

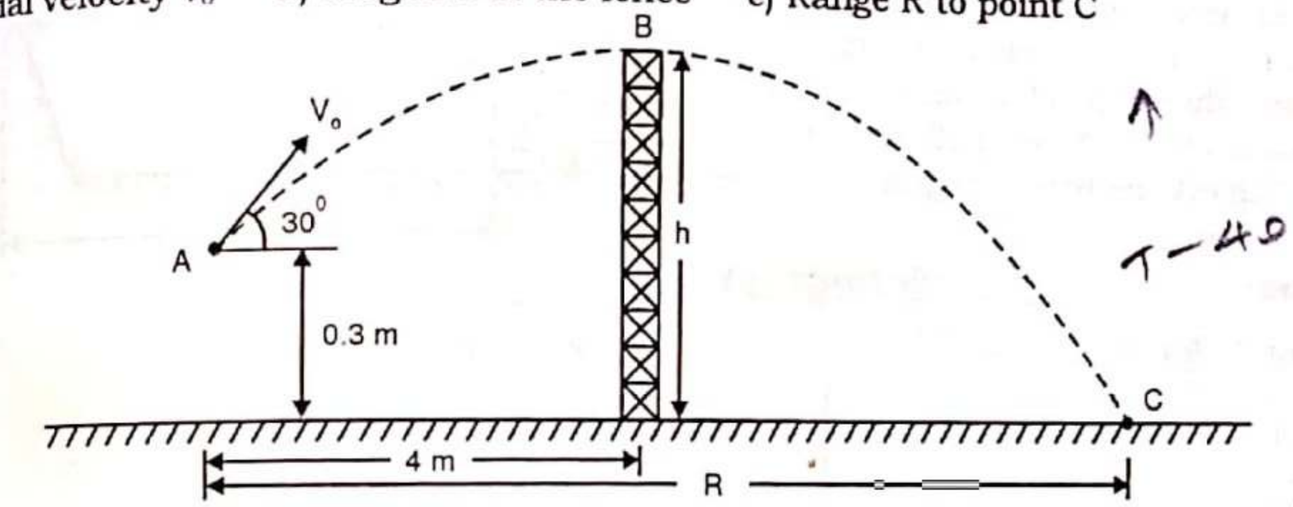

Solution:

Projectile motion (A – B)

Horizontal Motion

$v = v_o \cos 30 = 0.866\, v_o$
$s = 4$ m
$t = t$ sec

using $v = \dfrac{s}{t}$

$0.866\, v_o = \dfrac{4}{t}$ ..... (1)

Vertical Motion

$u = v_o \sin 30 = 0.5\, v_o$
$v = 0$
$s = (h - 0.3)$
$a = -9.81$ m/s²
$t = t$ sec

using $v = u + at$

$0 = 0.5\, v_o - 9.81 \times t$ ..... (2)

Solving equations (1) and (2), we get

t = 0.485 sec and $v_o = 9.52$ m/s ..... **Ans.**

Using $s = ut + \frac{1}{2}at^2$

$(h - 0.3) = (0.5 \times 9.52)0.485 + \frac{1}{2}(-9.81)(0.485)^2$

$\therefore\ h = 1.455$ m ..... **Ans.**

Projectile Motion (A – C)

Horizontal Motion

$v = 0.866\, v_o = 8.244$ m/s
$s = R$
$t = t$ sec

Using $v = \dfrac{s}{t}$

$8.244 = \dfrac{R}{t}$ ..... (3)

substituting t = 1.03 sec obtained from vertical motion

$8.244 = \dfrac{R}{1.03}$

$\therefore\ R = 8.491$ m ..... **Ans.**

Vertical Motion

$u = 0.5\, v_o = 4.76$ m/s
$v = -$
$s = -0.3$ m
$a = -9.81$ m/s²
$t = t$ sec

Using $s = ut + \frac{1}{2}at^2$

$-0.3 = 4.76\,t + \frac{1}{2}(-9.81)\,t^2$

$4.905\,t^2 - 4.76\,t - 0.3 = 0$

solving we get

t = 1.03 sec

Ex. 9.24 A long range gun is aimed to hit the target at B. Knowing that the gun can fire the shell at 360 m/s, determine the angle of inclination θ of the barrel so that the shell hits the target. Neglect the height of gun.

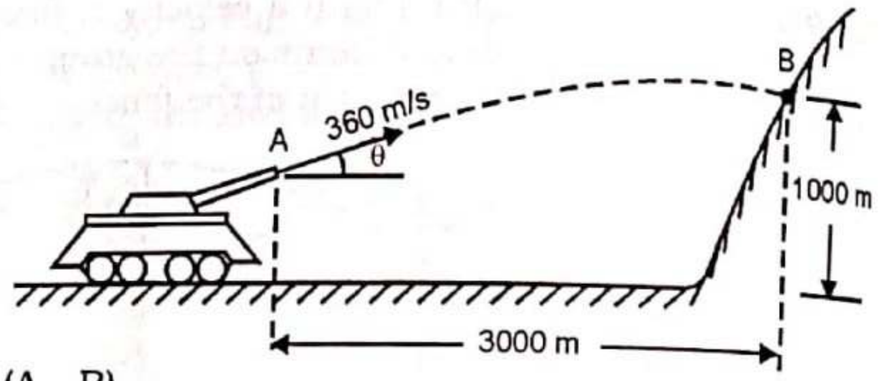

Solution: Projectile Motion (A – B)

Horizontal Motion

$v = 360 \cos\theta$

$s = 3000$ m

$t = t$ sec

Using $v = \frac{s}{t}$

$360\cos\theta = \frac{3000}{t}$ .....(1)

Vertical Motion ↑ +ve

$u = 360 \sin\theta$

$v = -$

$s = 1000$ m

$a = -9.81$ m/s²

$t = t$ sec

Using $s = ut + ½ at^2$

$1000 = (360 \sin\theta)\, t + ½ (-9.81)\, t^2$ ...(2)

Eliminating t between (1) and (2)

$$1000 = 360\sin\theta \times \frac{3000}{360\cos\theta} - 4.905 \times \left(\frac{3000}{360\cos\theta}\right)^2$$

$1000 = 3000 \tan\theta - 341 (1 + \tan^2\theta)$

$341 \tan^2\theta - 3000 \tan\theta + 1341 = 0$

$\tan\theta = 8.325$ or $\tan\theta = 0.4724$

∴ $\theta = 83.54°$ or $\theta = 25.28°$ ..... **Ans.**

Ex. 9.25 The boy throws a ball so that if may clear a wall 3.6 m high. The boy is at a distance of 4.8 m from the wall. The ball was found to hit the ground at a distance of 3.6 m on the other side of the wall. Find the least velocity with which the ball can be thrown. ***(M.U Dec 08)***

Solution: Let v_0 be the least initial velocity of the ball thrown at an elevation of θ degrees as shown.

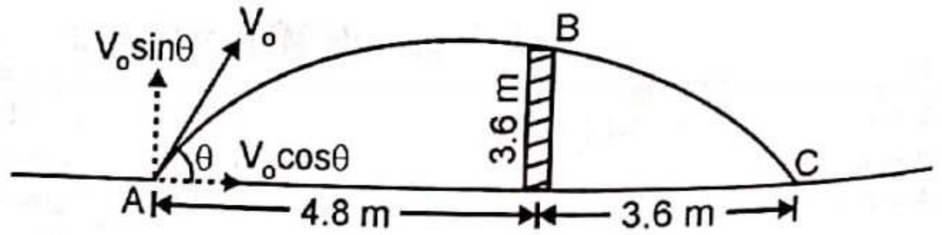

Projectile Motion (A – B)

Horizontal motion

$v = v_0 \cos\theta$

$s = 4.8$ m

$t = t_1$

using $v = \frac{s}{t}$

$v_0 \cos\theta = \frac{4.8}{t_1}$ ..... (1)

Vertical motion ↑ +ve

$u = v_0 \sin\theta$

$v = -$

$s = 3.6$

$a = -9.81$ m/s²

$t = t_1$

Using $s = ut + ½ at^2$

$3.6 = (v_0 \sin\theta)\, t_1 + ½ (-9.81)\, t_1^2$ ...(2)

Eliminating t_1 from equations (1) and (2)

$$3.6 = v_0 \sin\theta \times \frac{4.8}{v_0 \cos\theta} - 4.905 \times \left(\frac{4.8}{v_0 \cos\theta}\right)^2$$

∴ $3.6 = 4.8 \tan\theta - \frac{113}{v_0^2 \cos^2\theta}$ ..... (A)

Projectile Motion (A – C)

Horizontal motion

$v = v_0 \cos\theta$

$s = 8.4$ m

$t = t_2$

using $v = \frac{s}{t}$

$v_0 \cos\theta = \frac{8.4}{t_2}$ ..... (3)

Vertical motion ↑ +ve

$u = v_0 \sin\theta$

$v = -$

$s = 0$

$a = -9.81$ m/s²

$t = t_2$

using $s = ut + ½ at^2$

$0 = (v_0 \sin\theta)\, t_2 - ½ \times 9.81 \times t_2^2$ ..... (4)

Eliminating t_2 from equations (3) and (4)

$$0 = v_0 \sin\theta \times \frac{8.4}{v_0 \cos\theta} - 4.905 \times \left(\frac{8.4}{v_0 \cos\theta}\right)^2$$

∴ $0 = 8.4 \tan\theta - \frac{346.1}{v_0^2 \cos^2\theta}$ ..... (B)

Solving equations (A) and (B)

Let $\tan\theta = P$ and $\frac{1}{v_0^2 \cos^2\theta} = Q$

∴ $4.8P - 113Q = 3.6$

and $8.4P - 346.1Q = 0$

Solving we get P = 1.749 and Q = 0.04247

Now $\tan\theta = P = 1.749$ ∴ $\theta = 60.24°$ ..... **Ans.**

also $\frac{1}{v_0^2 \cos^2\theta} = Q$ ∴ $\frac{1}{v_0^2 \cos^2 60.24} = 0.04247$

∴ $v_0 = 9.776$ m/s ..... **Ans.**

Ex. 9.26 Two guns A and B 28 m apart are pointed at each other and fire with velocities v_A = 400 m/s and v_B = 350 m/s. Locate the point P where the bullets hit each other.

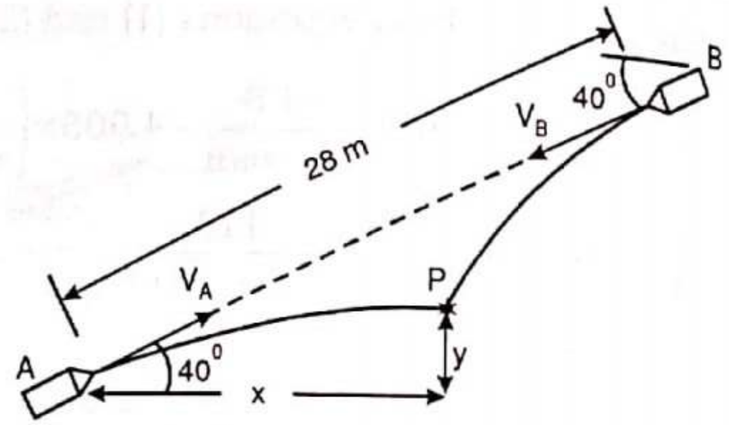

Solution: Let the bullets strike each other at P located at a horizontal position x and a vertical position y from A.
From B, the meeting point P is at horizontal position (21.45 – x) and a vertical position (18 – y).

Note that the time taken by bullet A and by bullet B to the meeting point P is the same.

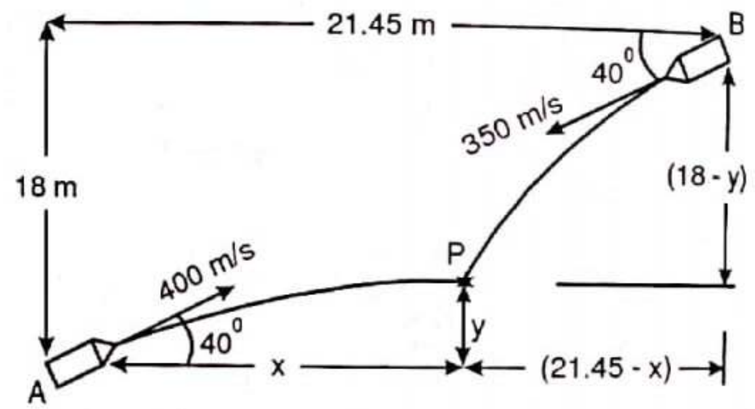

Projectile Motion of bullet A (A –P)

Horizontal Motion

v = 400 cos 40 = 306.4 m/s
s = x
t = t sec

Using $v = \frac{s}{t}$

$306.4 = \frac{x}{t}$ .....(1)

Vertical Motion ↑ +ve

u = 400 sin 40 = 257.1 m/s
v = –
s = y
a = – 9.81 m/s²
t = t sec
Using s = ut + ½ at²
y = (257.1) t – ½ (9.81) t² ...(2)

Projectile Motion of bullet B (B –P)

Horizontal Motion

v = 350 cos 40 = 268.1 m/s
s = 21.45 – x
t = t sec

Using $v = \frac{s}{t}$

$268.1 = \frac{21.45 - x}{t}$ .....(3)

Vertical Motion ↓+ve

u = 350 sin 40 = 225 m/s
v = –
s = 18 – y
a = 9.81 m/s²
t = t sec

Using s = ut + ½ at²
18 – y = 225 t + ½ (9.81) t² ...(4)

Solving equations (1) and (3)

$\frac{x}{306.4} = \frac{21.45 - x}{268.1}$

∴ x = 11.44 m ..... **Ans.**

also t = 0.03733 sec

substituting t = 0.03733 sec in equation (2)

y = 257.1 (0.03733) – ½ × 9.81 × (0.03733)²

∴ y = 9.592 m ..... **Ans.**

Note that equation (4) becomes redundant, but can be used to verify the answer obtained.

Ex. 9.27 Derive the equation of the path of a projectile and hence show that the path traced by a projectile is a parabolic curve. ***(MU Dec 09, Dec 17)***

Solution: Consider a projectile projected from the origin A (0, 0) with an initial velocity v_0 at an angle of elevation θ as shown. Let B (x, y) be a point on the path traced by the projectile. Let us analyse the projectile motion from A to B.

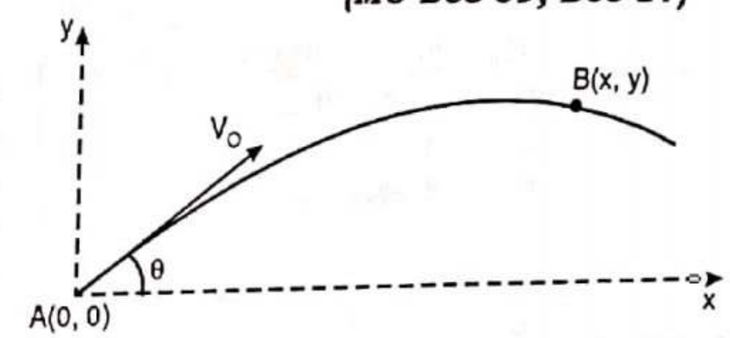

Projectile Motion (A – B)

Horizontal Motion

$v = v_0 \cos\theta$
s = x
t = t sec

Using $v = \frac{s}{t}$

$v_0 \cos\theta = \frac{x}{t}$ .....(1)

Vertical Motion ↑ +ve

$u = v_0 \sin\theta$
v = –
s = y
a = – g
t = t sec

Using s = ut + ½ at²
$y = (v_0 \sin\theta)\, t - \frac{1}{2} g t^2$ ...(2)

Eleminating 't' between equation (1) and (2) we get

$$y = v_0 \sin\theta \frac{x}{v_0 \cos\theta} - \frac{1}{2} \times g \times \left(\frac{x}{v_0 \cos\theta}\right)^2$$

or

$$\boxed{y = \tan\theta . x - \frac{g}{2 v_0^2 \cos^2\theta} . x^2}$$ ..... Equation of path of a projectile.

The above equation between y and x is the path equation of the projectile.
It is of the type $y = Ax - Bx^2$ where A and B are constants.
Since it is a second degree equation in x we prove that the path traced by a projectile is a parabolic curve.

Ex. 9.28 (a) Determine using fundamentals, the maximum height reached and the maximum distance traveled on horizontal surface by a projectile fired with velocity of 25 m/s at an angle of 40°. Derive expression for maximum height and maximum distance on horizontal surface and verify your answers. ***(M.U Dec 07)***

(b) Derive the formula for range of a projectile ***(VJTI Nov 09)***

Solution:

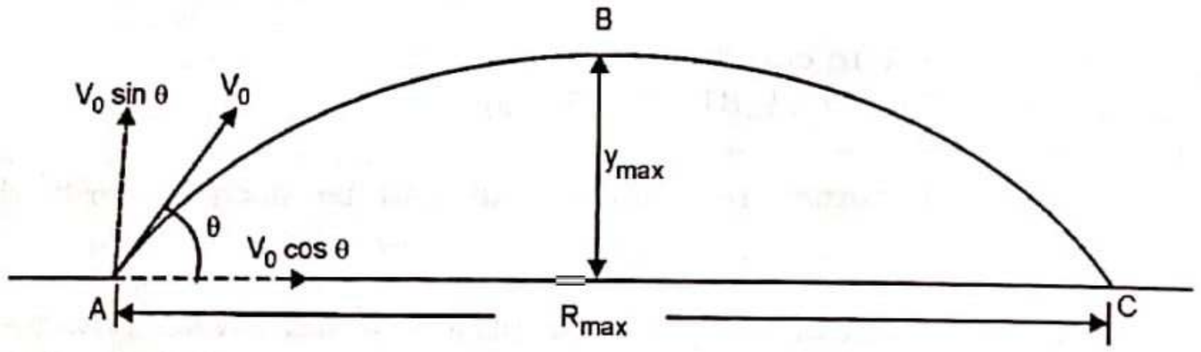

Projectile Motion (A – C)

Horizontal motion

$v = v_0 \cos\theta$
$s = R_{max}$
$t = t$ sec

using $v = \frac{s}{t}$

$\therefore\ v_0 \cos\theta = \frac{R_{max}}{t}$ ..... (1)

Vertical motion ↑ +ve

$u = v_0 \sin\theta$
$v = -$
$s = 0$
$a = -g$ m/s²
$t = t$

using $s = ut + \frac{1}{2}at^2$

$0 = (v_0 \sin\theta)t + \frac{1}{2}(-g)t^2$

$\therefore\ v_0 \sin\theta = \frac{gt}{2}$ ..... (2)

Eliminating 't' we get

$$v_0 \sin\theta = \frac{g \times R_{max}}{2v_0 \cos\theta}$$

$$\therefore\quad R_{max} = \frac{2v_0^2 \sin\theta \cos\theta}{g} \quad \text{or} \quad \boxed{R_{max} = \frac{v_0^2 \sin 2\theta}{g}}$$ ..expression for maximum range.

Projectile Motion (A – B)

Horizontal motion

Vertical motion ↑ +ve

$u = v_0 \sin\theta$
$v = 0$
$s = y_{max}$
$a = -g$ m/s²
$t = -$

using $v^2 = u^2 + 2as$

$0 = (v_0 \sin\theta)^2 + 2(-g)y_{max}$

or $\boxed{y_{max} = \frac{v_0^2 \sin^2\theta}{2g}}$ ..... expression for maximum height

In the problem it is given θ = 40° and v_0 = 25 m/s

$$\therefore\quad R_{max} = \frac{v_0^2 \sin 2\theta}{g} = \frac{25^2 \sin(2\times 40)}{9.81} = 62.62 \text{ m} \text{ ..... } \textbf{Ans.}$$

$$\text{Also}\quad y_{max} = \frac{v_0^2 \sin^2\theta}{2g} = \frac{25^2 \times \sin^2(40)}{2\times 9.81} = 13.16 \text{ m} \text{ ..... } \textbf{Ans.}$$

Ex. 9.29 A fireman is trying to extinguish a fire in a building. The initial velocity of the water jet is 15 m/s. Standing at 10 m away from the building, determine the maximum height H_{max} at which the water jet can strike the building and the corresponding angle α at which the fireman should hold the hose pipe.

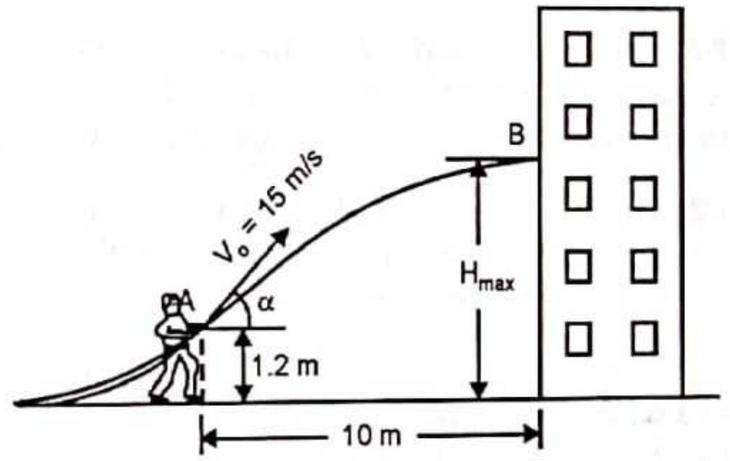

Solution: Let $y = H_{max} - 1.2$ be the vertical level difference between A and B

Projectile Motion (A – B)

Horizontal Motion

v = 15 cos α m/s
s = 10 m
t = t sec

using $v = \frac{s}{t}$

$15 \cos\alpha = \frac{10}{t}$ ..... (1)

Vertical Motion ↑ + ve

u = 15 sin α
v = –
s = y
a = – 9.81
t = t sec

Using $s = ut + \frac{1}{2}at^2$

$y = (15 \sin\alpha)\, t + \frac{1}{2}(-9.81)\, t^2$ ... (2)

Eliminating t between equations (1) and (2), we get

$$y = 15 \sin\alpha \times \frac{10}{15 \cos\alpha} - 4.905 \times \left(\frac{10}{15 \cos\alpha}\right)^2$$

$$y = 10 \tan\alpha - 2.18\,(1 + \tan^2\alpha) \quad \text{..... (3)}$$

The above equation is y = f (α).

To maximize value of y, perform $\frac{dy}{d\alpha} = 0$

$$\frac{dy}{d\alpha} = 10 \sec^2\alpha - 2.18\,(2 \tan\alpha . \sec^2\alpha) = 0$$

$$10 = 4.36 \tan\alpha \quad \text{or} \quad \alpha = 66.44° \text{ ..... } \textbf{Ans.}$$

Substituting value of α in equation (3) we get,

$\therefore$ y = 9.288 m

$\therefore$ $h_{max} = y + 1.2$ ..... **Ans.**

h_{max} = 10.488 m

Exercise 9.4

P1. A gunman fires a bullet with a velocity of 100 m/s, 50° upwards from the top of a hill 300 m high to hit a bird. The bullet misses its target and finally lands on the ground. Calculate (a) the maximum height reached by the bullet above the ground (b) total time of flight (c) horizontal range of the bullet (d) velocity with which the bullet hits the ground.

(MU May 14)

P2. Ball is thrown from horizontal level, such that it clears a wall 6 m high, situated at a horizontal distance of 35 m. If the angle of projection is 60° with respect to the horizontal, what should be the minimum velocity of projection.

(MU Dec 13)

P3. A ball is projected upwards from the top of a tower 30 m high and strikes the ground after 8 sec at a point 300 m from the foot of the tower. Determine the velocity of projection and also the maximum height attained by the ball above the ground.

P4. A stunt motorcyclist has to clear a ditch. Find the minimum speed it should have at A to clear the ditch. Also find his speed at B and the angle α of ramp which should be provided.

(VJTI May 09)

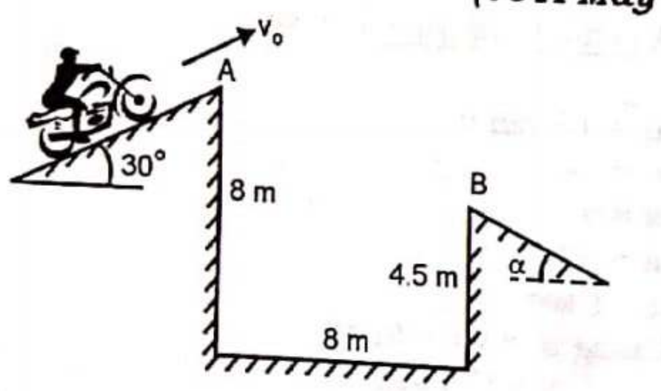

P5. A ball dropped vertically on an inclined plane at A rebounds with a velocity v_o perpendicular to the plane and lands again on the plane at B. Knowing v_o = 15 m/s, determine the range R.

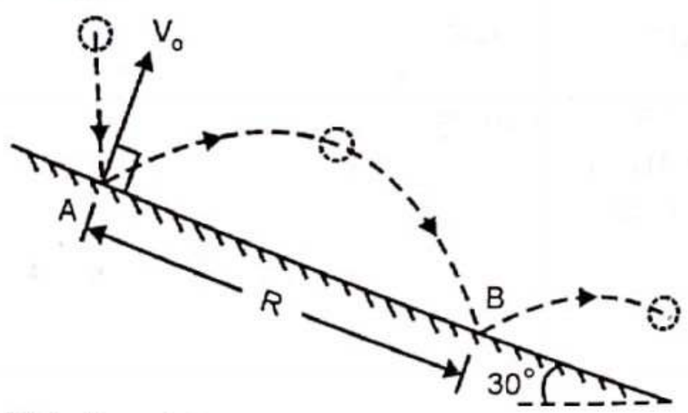

P6. A ball is projected from the top of a 20 m high building with a velocity of 10 m/s at 30° upward with the horizontal. The ball lands on a sloping ground. Find the range R and the time of flight of the ball.

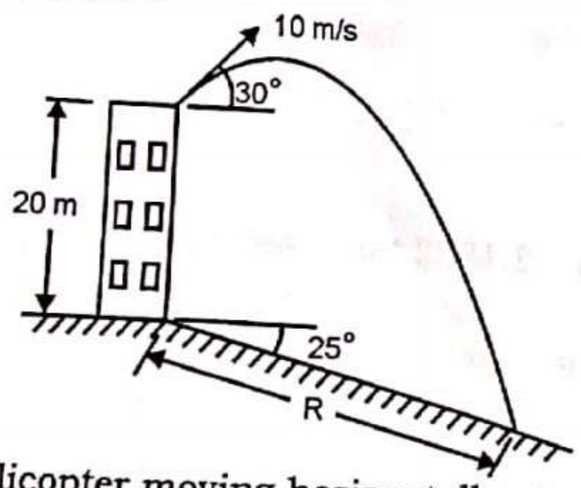

P7. An object is projected so that it just clears two obstacles each 7.5 m high which are situated 50 m from each other. If the time of passing between two obstacles is 2.5 seconds, calculate the complete range of projection and initial velocity of projection.

(M.U May 08, Dec 15, VJTI Dec 13)

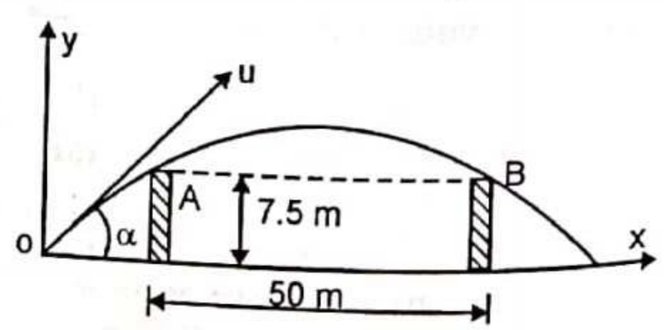

P8. A helicopter moving horizontally at an altitude of 100 m drops a packet. The packet landed on the ground 250 m away from the point on the ground directly below the point of drop. What is the velocity of the helicopter ?

P9. An artillery gun can fire a shell with a velocity of 260 m/s. How much maximum it can penetrate into the enemy's territory as it targets the enemy from the border.

P10. A ball thrown with speed of 12 m./s at an angle of 60° with a building strikes the ground 11.3 m horizontally from the foot of the building as shown. Determine the height of the building.

(M.U Dec 12)

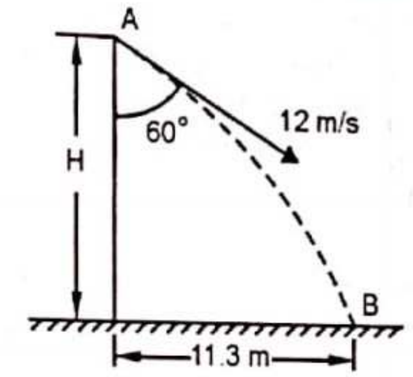

P11. A ball is projected from the top of a tower 110 m height with the velocity of 100 m/s at an angle of 25° to the horizontal. Neglecting the air resistance, find (1) The maximum height the ball will rise from the ground. (2) The horizontal distance it will travel before it strikes the ground. (3) The velocity with which it strikes the ground.

(M.U May 11, NMIMS July 16)

P12. A ball bearing slides down a 30° plane and leaves the plane with a certain velocity v_o. Find for what range of value of v_o, the ball bearing can pass through a 0.8 m wide slot.

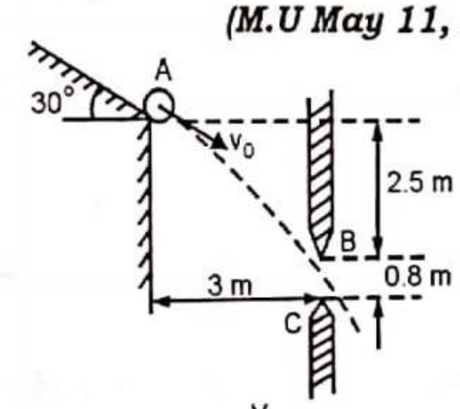

P13. A gardener holds a water hose at A causing the water to fall on the plants at B. find

(a) the discharge velocity v_o of water at A

(b) velocity of the water as it falls on the plants at B.

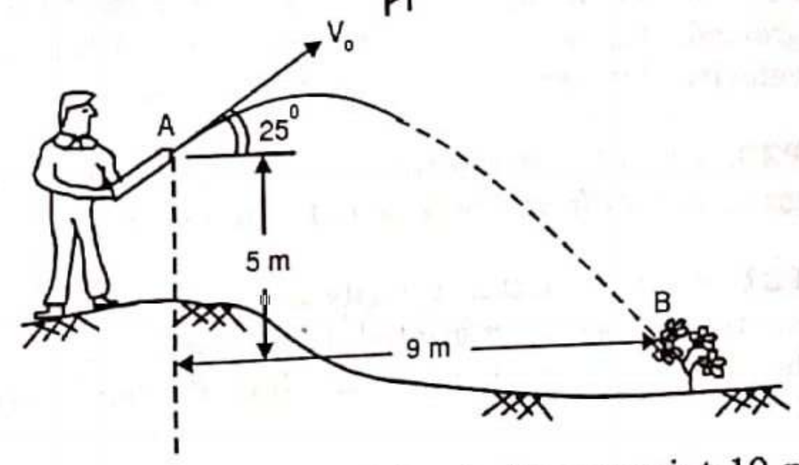

P14. A shot is fired with a bullet with an initial velocity of 20 m/s from a point 10 m infront of a vertical wall 5 m high. Find the angle of projection with the horizontal to enable the shot to just clear the wall. Also find the range of shot where the bullet falls on the ground.

(M.U Dec 16)

P15. A fighter plane flying horizontally at 324 kmph at an altitude of 3500 m plans to strike an enemy train moving with a constant velocity of 90 km/hr. Find the distance the plane should be behind the train just as it drops the bomb.

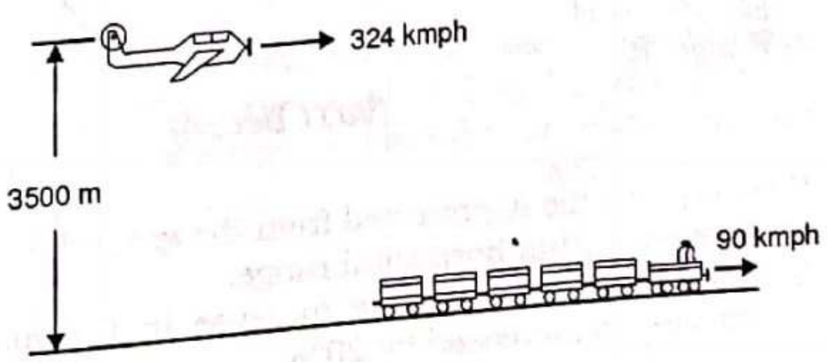

P16. An aeroplane is flying in horizontal direction with a velocity of 540 km/hr and at height of 2200m. When it is vertically above the point A on the ground, an object is dropped from it. The object strikes the ground at point B. Calculate the distance AB (ignore air resistance). Also find velocity at B and time taken to reach B. ***(M.U Dec 10)***

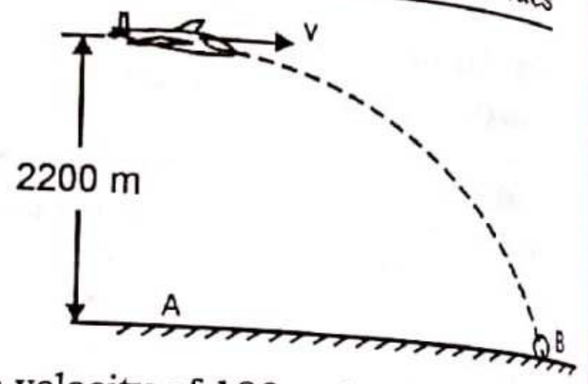

P17. A missile M is fired from a certain position A with a velocity of 100 m/s at an angle of 55° upwards with the horizontal. After some time an antimissile N is fired from the same point A with a velocity of 500 m/s at an angle of 40° upwards to destroy the missile M. Find (a) the time of flight of missile M before it is destroyed. (b) the horizontal and vertical distance from A where the destruction takes place. ***(VJTI Apr 17)***

P18. A box dropped from a helicopter moving horizontally with a constant velocity v_H, takes 12 sec to reach the ground and strikes the ground at an angle of 60°. Determine

a) the altitude h of the helicopter
b) the horizontal distance R traveled by the box
c) the velocity v_H of the helicopter.

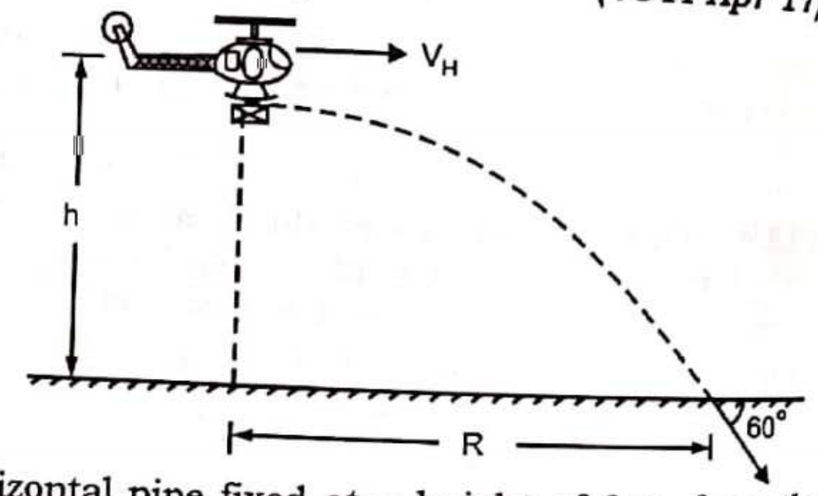

P19. Water being discharged from a horizontal pipe fixed at a height of 3 m from the ground, falls at a horizontal distance of 4.5 m from the point of discharge. What is the velocity of water discharge from the pipe.

P20. A ball thrown horizontally from the top of a 50 m high building hits the horizontal ground 20m from the base of the building. Find initial velocity of the ball? ***(VJTI May 08)***

P21. Find the initial velocity and the corresponding angle of projection of a projectile such that when projected from the ground it just clears a wall 4.5 m high at a horizontal distance of 6 m and finally lands on the ground at a distance of 35 m beyond the wall.

P22. The snowmobile is travelling at 10 m/s as shown in figure when it leaves embankment at A. Determine,

a) The time of flight from A to B.
b) The speed at which it strikes the ground at B.
c) Range 'R'.

(VJTI Dec14)

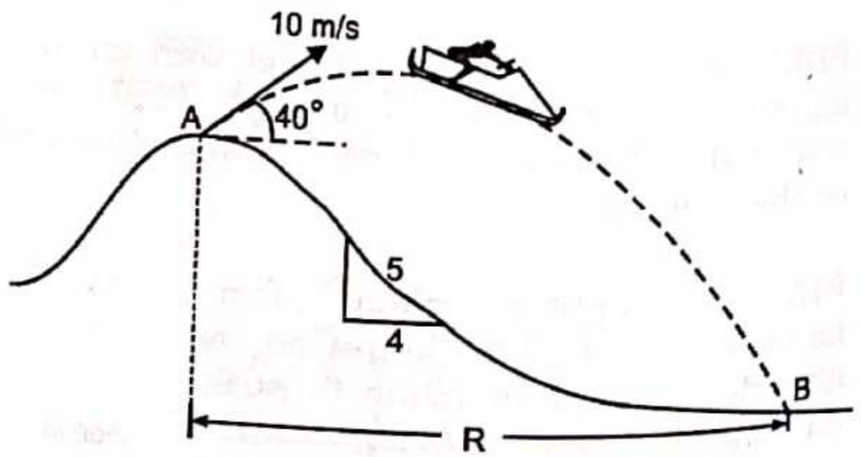

P23. A projectile is projected from the ground with a velocity of 25 m/s. Find

a) The maximum horizontal range.
b) What is the percentage increase in the maximum horizontal range, if its initial velocity is increased by 20%.

P24. A gunman standing on the ground fires his gun to hit a bird flying at an altitude of 20 m from the ground. The angle of projection being 60° upwards with horizontal. If the bullet hits the bird 2.5 sec after firing, find

a) The velocity of the bullet as it left the gun.
b) The bird is killed instantly. Find the time it takes to reach the ground.

Neglect the height of gunman.

P25. A ball is projected on an incline from A with velocity v_o at an angle θ as shown. The ball lands at C, 80 m away from A. If the maximum height covered above A is 22 m find v_o and θ.

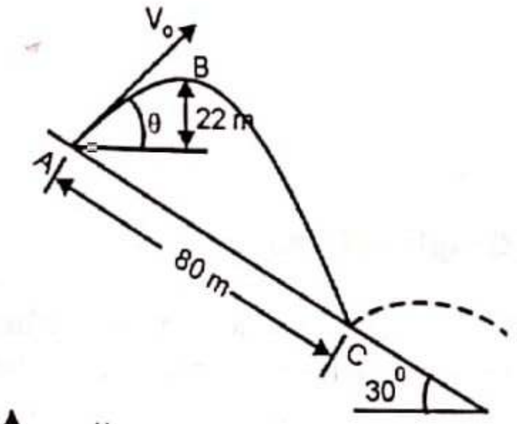

P26. A ball rebounds at A and strikes the incline plane at point B at a distance 76 m as shown in figure. If the ball rises to maximum height h = 19 m above the point of projection, compute the initial velocity and the angle of projection α.

(M. U. May 09)

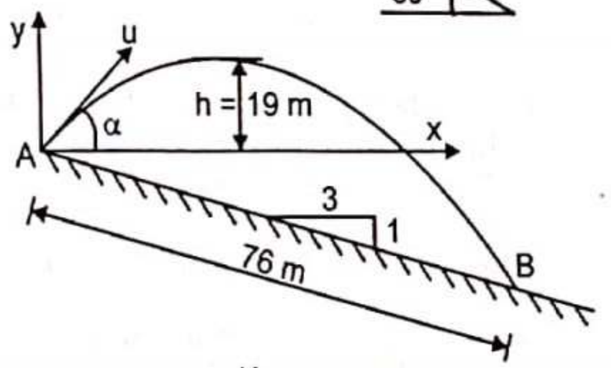

P27. Ball bearings leave the horizontal trough with a horizontal velocity v_o to fall through a gap of 60 mm. calculate the permissible range of velocity v_o that will enable the balls to enter the gap.

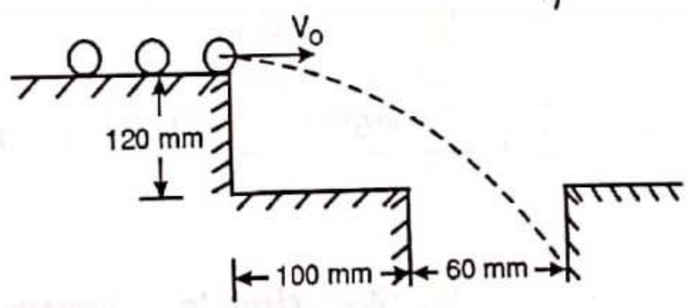

P28. A ball is thrown upward from a high cliff as shown. with a velocity of 60 m/s at The ball strikes the inclined ground at right angles. If inclination of ground is 30° as shown, determine

(i) Time after which the ball strikes the ground.
(ii) Velocity with which it strikes the ground.
(iii) Co-ordinates (x, y) of a point of strike w.r.t. point of projection.

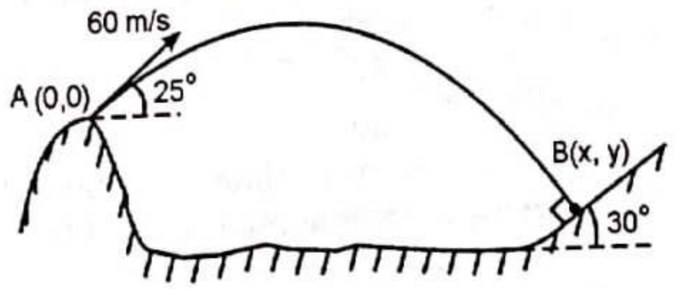

P29. A jet of water discharging from a nozzle hits a vertical screen placed at a distance of 8m from the nozzle at a height of 3m. When the screen is shifted by 4m further away from nozzle, the jet hits the screen again at the same point. Find the angle of projection and velocity of projection of the jet at the nozzle. ***(VJTI May 06)***

P30. A boy standing at 12 m in front of a wall attempts to strike a ball at the height h on the wall. Taking v_o = 15 m/s and knowing h = 7.5 m find the angle θ for which the ball strikes the wall at B.

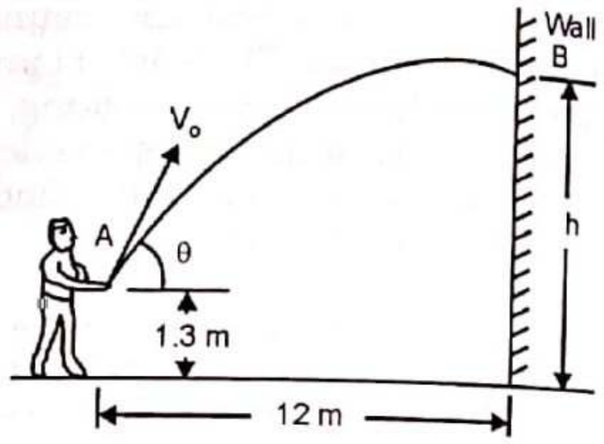

9.11 Graphical Analysis

The motion of a particle along a straight path can be represented by motion curves. Common motion curves are position–time (x – t), velocity–time (v – t), acceleration–time (a – t) and velocity–position (v – x) curves.

1) **position – time (x – t) curve**

This is drawn with position on the ordinate and time on abscissa.

Since $v = \frac{dx}{dt}$ at any instant of time the slope of x – t curve gives the velocity of the particle at that instant.

∴ $\boxed{v = \text{(slope x – t curve)}}$ .....[9.17]

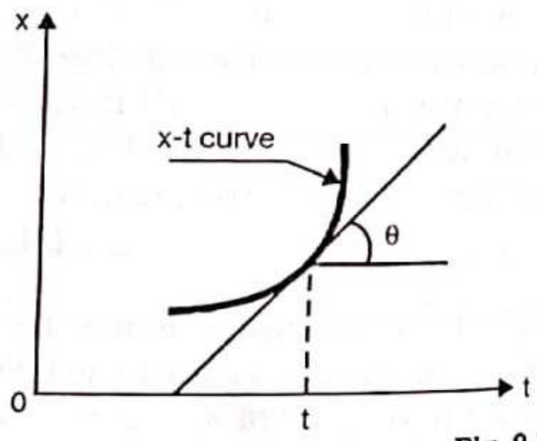

Fig. 9.10

2) **velocity – time (v – t) curve**

This is drawn with velocity on the ordinate and time on abscissa

since $a = \frac{dv}{dt}$,

At any instant of time the slope of v – t curve gives the acceleration of the particle at that instant.

∴ $\boxed{a = \text{(slope v – t curve)}}$ .....[9.18]

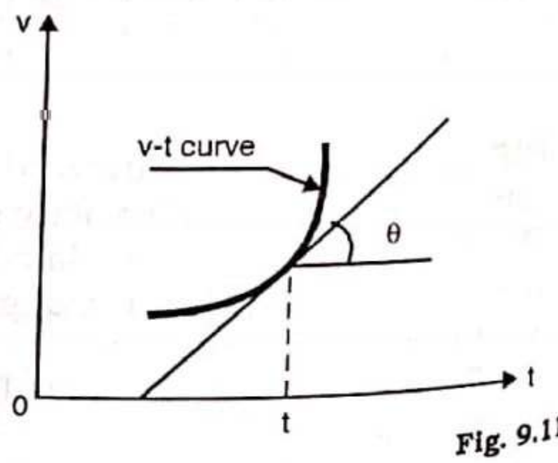

Fig. 9.11

Now, $v = \frac{dx}{dt}$

∴ $dx = vdt$

or $\int dx = \int vdt$

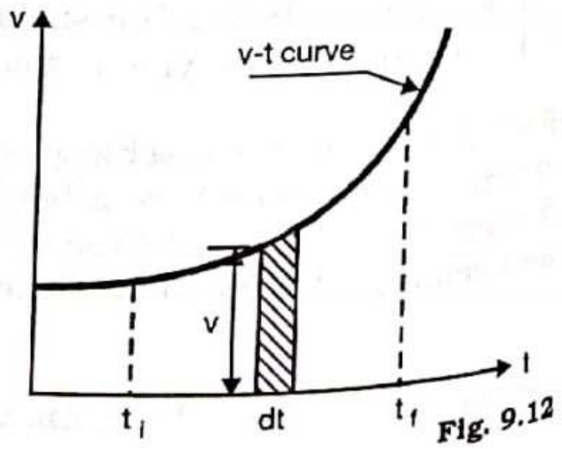

Fig. 9.12

Let the particle's position be x_i at time t_i and its position change to x_f at time t_f.

If an elemental strip of width dt is taken between t_i and t_f, then the area of this strip is vdt.

∴ $\int vdt$ represents the entire area under the v – t curve between t_i and t_f

∴ $\int_{x_i}^{x_f} dx$ = area under v – t curve

∴ $x_f - x_i$ = area under v – t curve

or $\boxed{x_f = x_i + \text{[area under v – t curve]}}$ .....[9.19]

3) **acceleration – time (a – t) curve**

This is drawn with acceleration on the ordinate and time on the abscissa.

we know, $a = \frac{dv}{dt}$

∴ $dv = adt$

or $\int dv = \int adt$

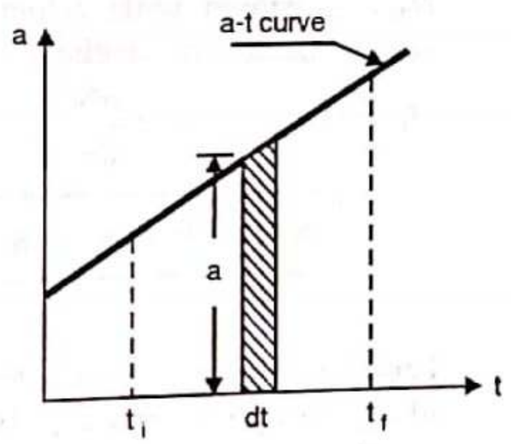

Fig. 9.13

Let the particle's velocity be v_i at the time t_i and its velocity be v_f at time t_f.

If an elemental strip of width dt is taken between t_i and t_f, then the area of this strip is adt

∴ $\int adt$ represents the entire area under the a – t curve between t_i and t_f.

$\int_{v_i}^{v_f} dv$ = area under a – t curve

∴ $v_f - v_i$ = area under a – t curve

or $\boxed{v_f = v_i + \text{[area under a – t curve]}}$ .....[9.20]

From an a – t curve the particle's position x_f can also be known at any instant t_f, knowing the particles position x_i and velocity v_i at an prior instant t_i, using the *area moment method* formula given below.

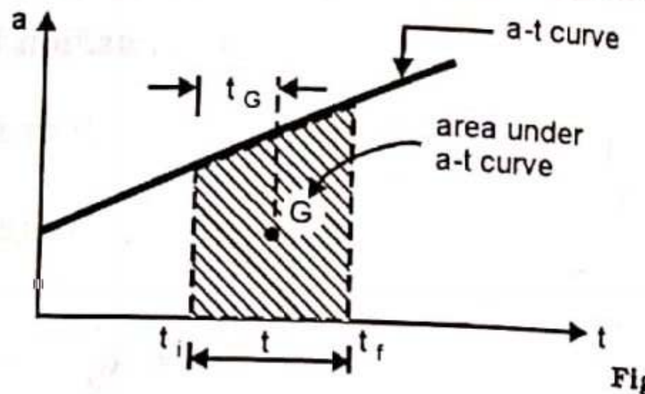

Fig. 9.14

$$x_f = x_i + v_i \times t + (\text{area under } a-t \text{ curve}) \times (t - t_G) \quad \text{.....[9.21]}$$

here $t = t_f - t_i$ and t_G is the abscissa of the centroid G of the area under a – t curve.

4) **velocity – position (v – x) curve**

This is drawn with velocity on the ordinate and position on abscissa.

We know, $a = \dfrac{vdv}{dx}$

$$\therefore \quad a = v \times [\text{slope } v - x \text{ curve}] \quad \text{.....[9.22]}$$

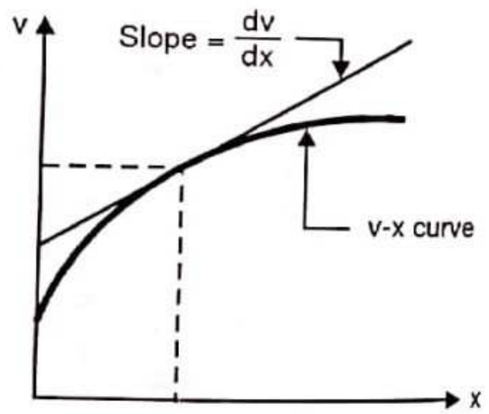

Fig. 9.15

From v - x curve we can find the particle's velocity v and the corresponding slope at a given position x and hence using equation 9.22 we can find the particles acceleration.

Let us tabulate the uses of various motion curves

No.	Motion curve	Use	Formula
1	x – t	Slope of x – t curve gives velocity	v = (slope x – t curve)
2	v – t	a) Slope of v – t curve gives acceleration b) Area under v – t curve gives change in position and hence the new position.	a = (slope v – t curve) $x_f = x_i +$ [area under v – t curve]
3	a – t	a) Area under a – t curve gives change in velocity and hence the new velocity b) Area under a – t curve also helps in finding the particle's position	$v_f = v_i +$ [area under a – t curve] $x_f = x_i + v_i \times t +$ (area under a – t curve) $(t - t_G)$
4	v – x	Slope of v – x curve helps in finding the particle's acceleration	a = v × (slope v – x curve)

9.11.1 Standard Motion Curves

We know that rectilinear moving particles either move with uniform velocity or uniform acceleration or may move with variable acceleration. The general or standard motion curves (viz. a – t, v – t, x – t) for these different rectilinear motions are given here.

The particle's motion may be easily identified if we relate the given motion curve problem with these standard curves. For example, if the particle's a – t curve is parallel to acceleration axis, the particle is in uniform acceleration motion. Similarly if the x – t curve has a cubic equation it indicates variable acceleration motion.

a) Uniform Velocity Motion curves

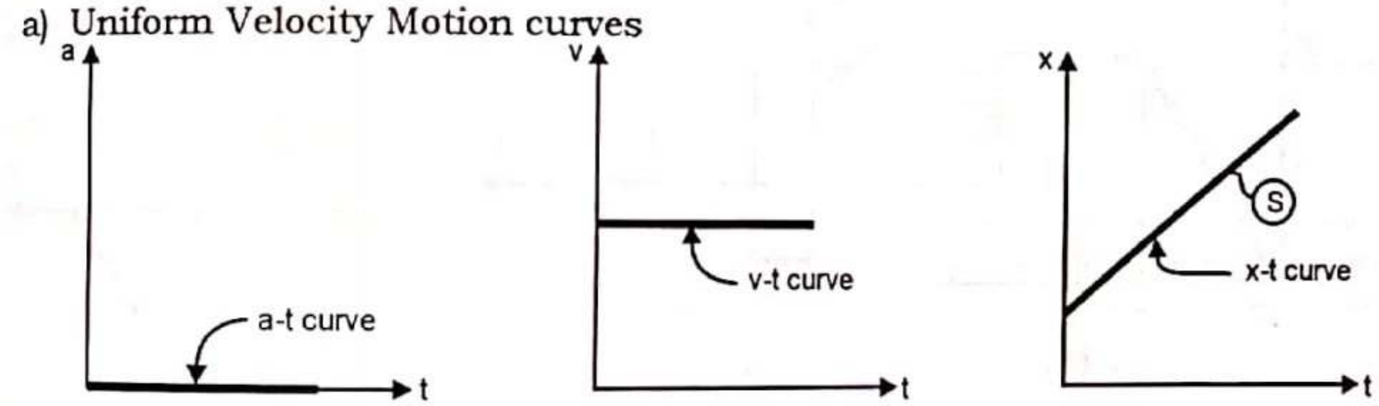

Straight horizontal curve on the time axis — Straight horizontal curve parallel to time axis — Straight inclined curve

b) Uniform Acceleration Motion curves

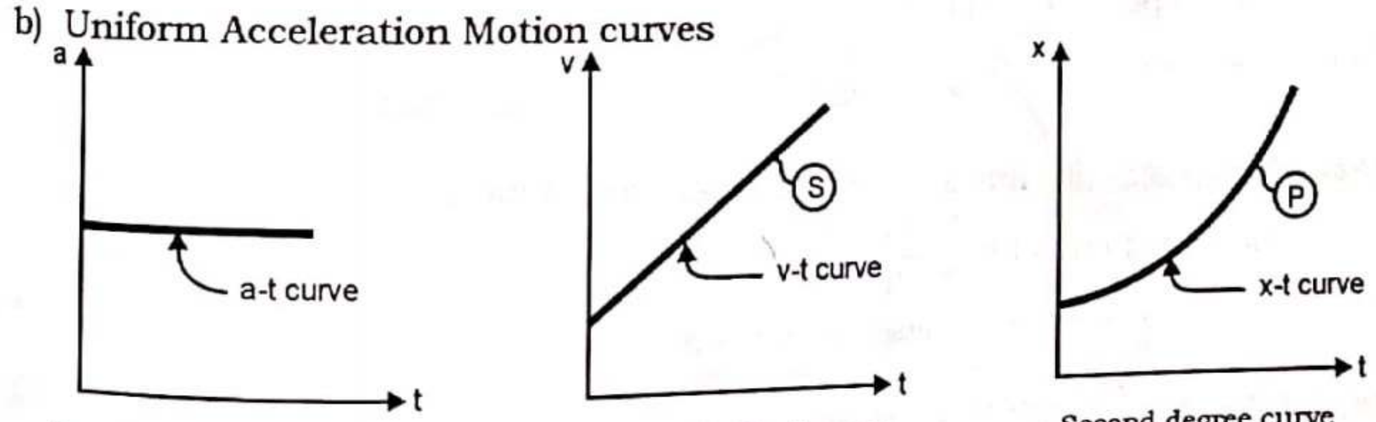

Straight horizontal curve parallel to time axis — Straight inclined curve — Second degree curve (Parabolic)

c) Variable Acceleration (Linear Variation) Motion curves

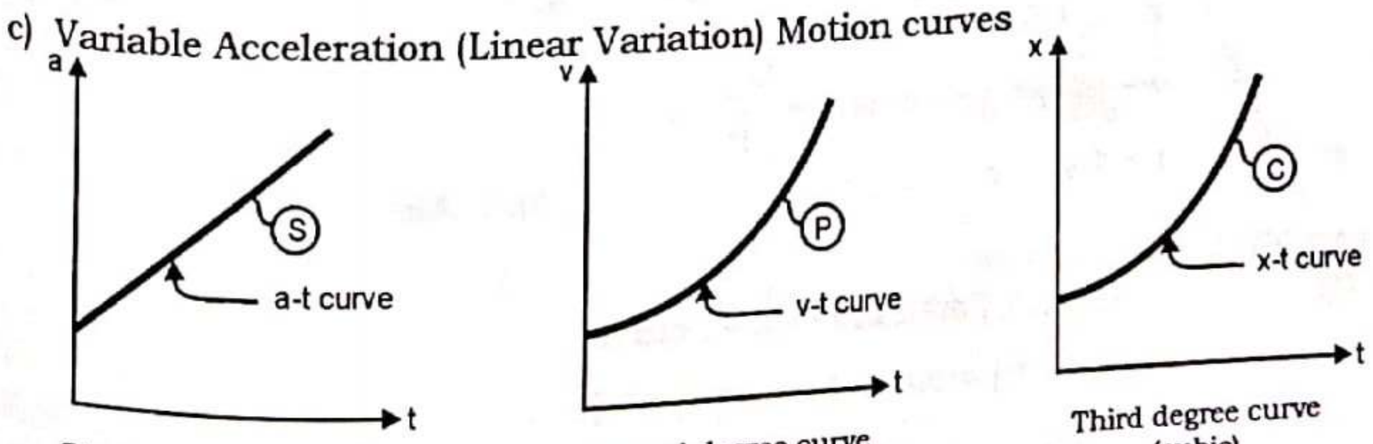

Straight inclined curve — Second degree curve (Parabolic) — Third degree curve (cubic)

Ex.9.30 The following graphs depict the kinematics relations. For each graph determine the particle's velocity at t =4 sec. Take v = 2 m/s at t = 0 for graphs 4, 5 and 6.

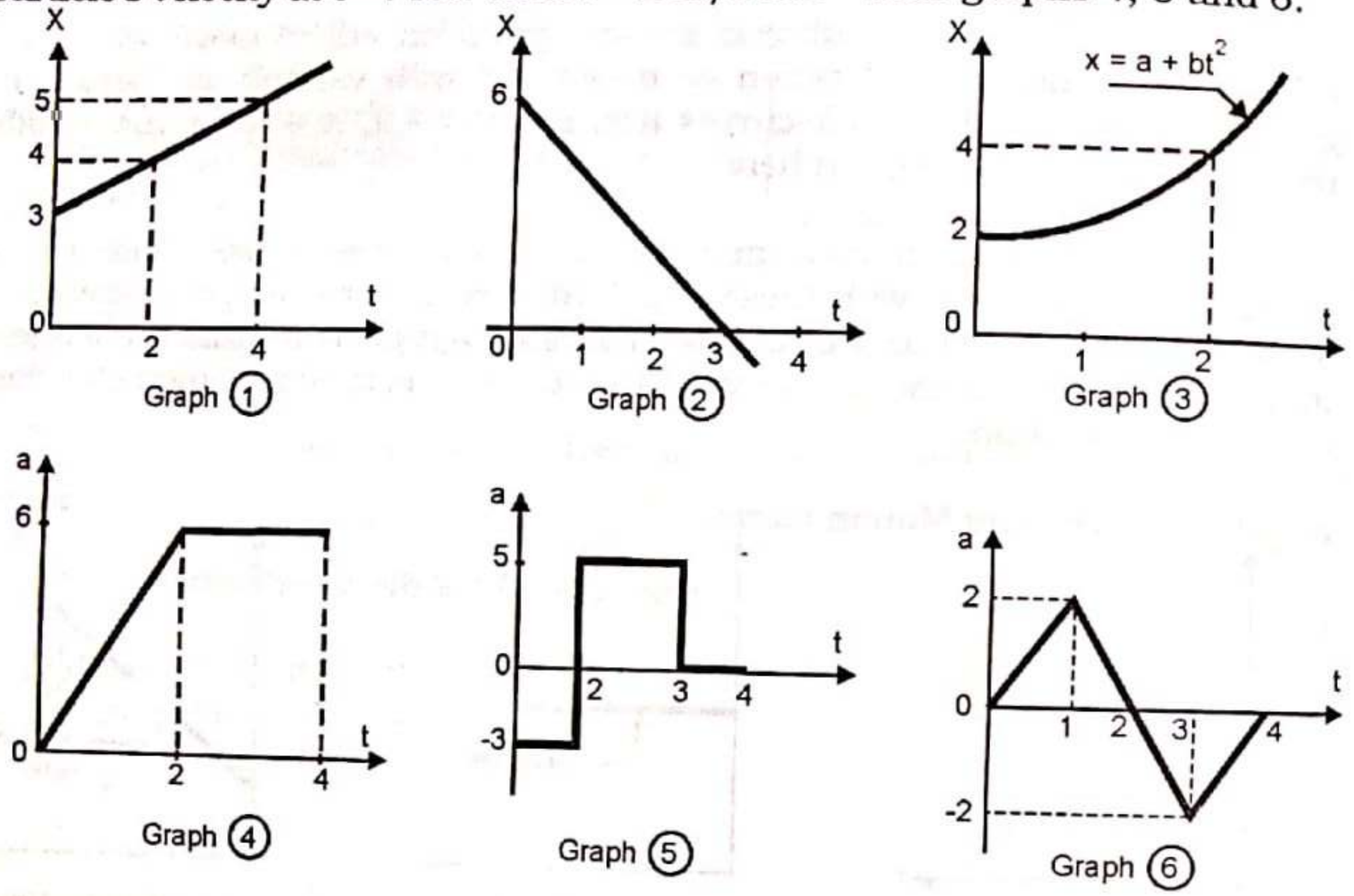

Solution: Graph (1) is a straight x – t curve. We know slope of x – t curve gives the velocity

$$v = (\text{slope } x - t \text{ curve}) = \frac{y_2 - y_1}{x_2 - x_1} = \frac{5-3}{4-0} = \frac{1}{2}$$

$\therefore v = 0.5$ m/s ..... **Ans.**

Graph (2) is a straight line x – t curve indicating uniform velocity motion.

$$(\text{slope } x - t \text{ curve}) = \frac{0-6}{3-0} = \frac{-6}{3} = -2 \text{ m/s}$$

$\therefore$ velocity is constant at v = – 2 m/s ..... **Ans.**

Graph (3) is a parabolic x – t curve indicating uniform acceleration motion.

Given $x = a + b.t^2$

From graph at t = 0, x = 2 and at t = 2 sec, x = 4, substituting we get a = 2, b = 0.5

$\therefore$ $x = 2 + 0.5t^2$

$$v = (\text{slope } x - t \text{ curve}) = \frac{dx}{dt} = t$$

$\therefore$ at t = 4 sec, v = 4 m/s ..... **Ans.**

Graph (4) is an a – t curve

Using $v_f = v_i + [\text{ area under a} - \text{t curve}]$

$v_{t=4} = 2 + [\text{ area under a} - \text{t curve}]_{0-4}$

$= 2 + [(½ \times 2 \times 6) + (2 \times 6)]$ $\therefore$ $v_{t=4} = 20$ m/s ..... **Ans.**

Graph (5) is an a – t curve

Using $v_f = v_i + [\text{ area under a} - \text{t curve}]$

$v_{t=4} = 2 + [\text{ area under a} - \text{t curve}]_{0-4}$

$= 2 + [-(2 \times 3) + (1 \times 5)]$ $\therefore$ $v_{t=4} = 1$ m/s ..... **Ans.**

Graph (6) is an a – t curve

Using $v_f = v_i + [\text{ area under a} - \text{t curve}]$

$v_{t=4} = 2 + [\text{ area under a} - \text{t curve}]_{0-4}$

$= 2 + [(½ \times 2 \times 2) - (½ \times 2 \times 2)]$ $\therefore$ $v_{t=4} = 2$ m/s ..... **Ans.**

Ex. 9.31 A particle moves in a straight line with a velocity-time diagram shown in figure. If s = – 25 m at t = 0, draw displacement-time and acceleration-time diagrams for 0 to 24 seconds.

(MU May 14)

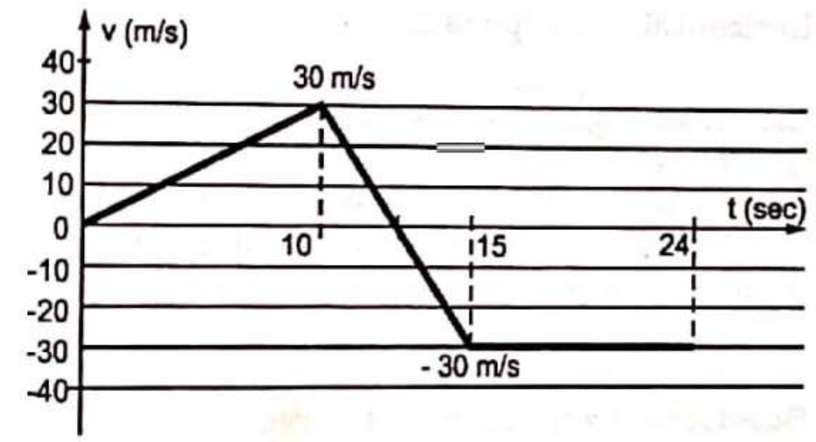

Solution: Position Calculations

Form v-t graph, position x can be obtained using

$x_f = x_i + (\text{area under v} - \text{t curve})$

$x_{10} = x_0 + (\text{area under v} - \text{t curve})_{0-10}$

$$= -25 + \left(\frac{1}{2} \times 10 \times 30\right) = 125 \text{ m}$$

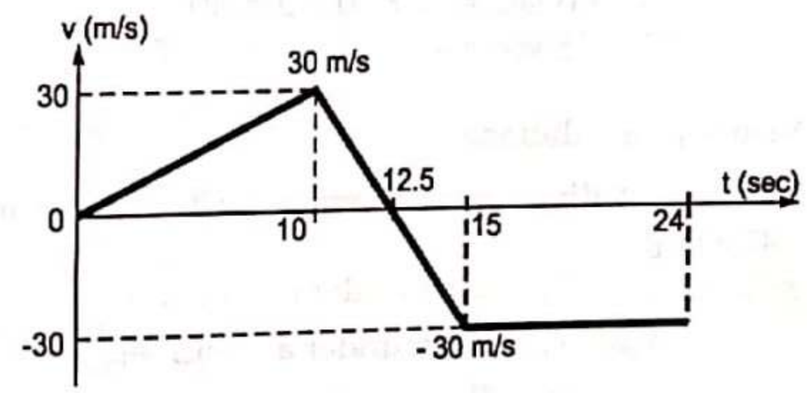

$x_{12.5} = x_{10} + (\text{area under v} - \text{t})_{10-12.5}$

$$= 125 + \left(\frac{1}{2} \times 2.5 \times 30\right) = 162.5 \text{ m}$$

Note: At t = 12.5 sec, the particle acquires zero velocity. This is obtained by similarity of triangles.

$x_{15} = x_{12.5} + (\text{area under v} - \text{t})_{12.5-15}$

$$= 162.5 - \left(\frac{1}{2} \times 2.5 \times 30\right) = 125 \text{ m}$$

$x_{24} = x_{15} + (\text{area under v} - \text{t})_{15-24}$

$= 125 - (9 \times 30) = -145$ m

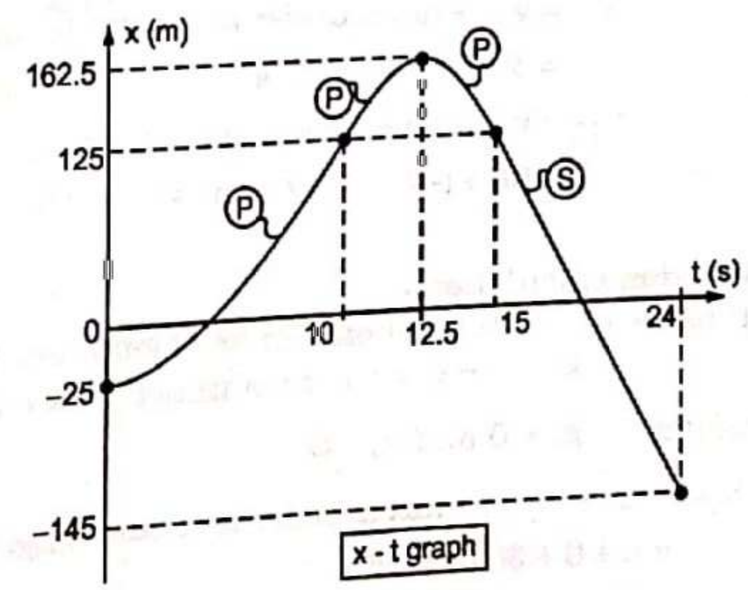

Acceleration Calculations

From v-t graph, acceleration can be obtained by using

$a = \text{slope of } v - t \text{ curve}$

$$a_{0-10} = \frac{y_2 - y_1}{x_2 - x_1} = \frac{30-0}{10-0} = 3 \text{ m/s}^2$$

$$a_{10-15} = \frac{y_2 - y_1}{x_2 - x_1} = \frac{-30-30}{15-10} = -12 \text{ m/s}^2$$

$a_{15-24} = 0$ ..... since v – t curve is horizontal i.e. slope is zero.

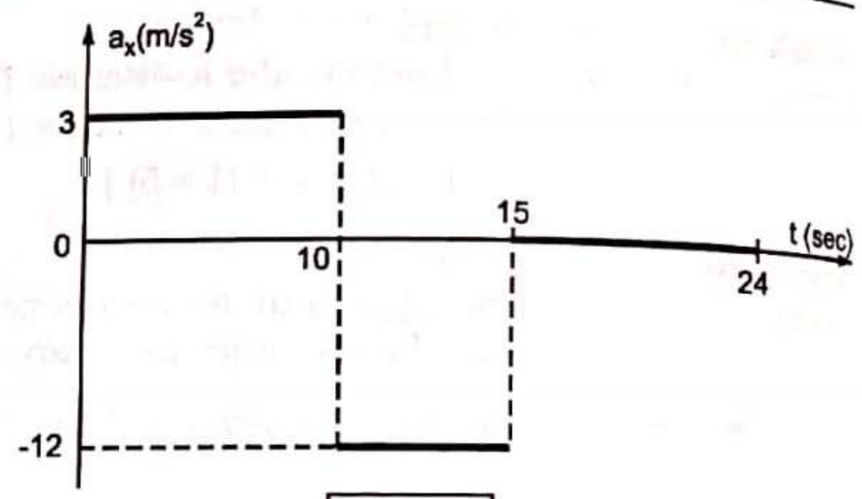

a - t graph

Ex. 9.32 Figure shows (a – t) diagram for particle moving along a straight path for a time interval 0 – 75 sec. Plot (v – t) and (x – t) diagrams and hence find the maximum speed attained by the particle. The particle started from rest from origin.

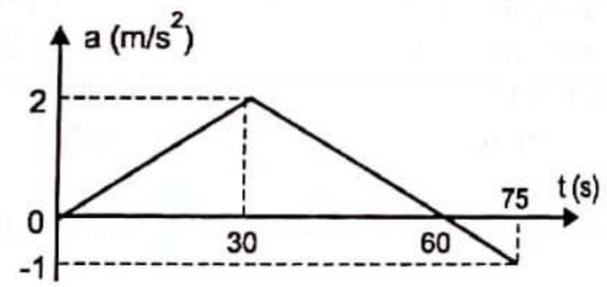

Solution: Area under a – t curve

0 – 30 sec = ½ × 30 × 2 = 30

30 – 60 sec = ½ × 30 × 2 = 30

60 – 75 sec = – ½ × 15 × 1 = – 7.5

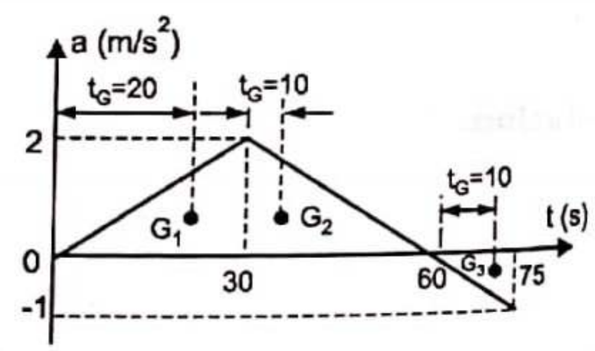

Velocity calculations

Since a – t diagram is given, velocity can be found out using

$v_f = v_i + (\text{area under a - t curve})$

$v_{30} = v_o + (\text{area under a - t curve})_{0\text{-}30}$

$= 0 + 30 = 30 \text{ m/s}$

$v_{60} = v_{30} + (\text{area under a - t curve})_{30\text{-}60}$

$= 30 + 30 = 60 \text{ m/s}$

$v_{75} = v_{60} + (\text{area under a - t curve})_{60\text{-}75}$

$= 60 + (-7.5) = 52.5 \text{ m/s}$

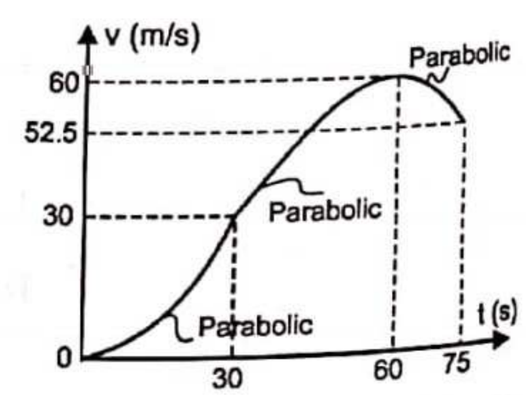

Position calculations

From a – t curve position can be calculated using

$x_f = x_i + v_i \times t + (\text{area under a – t curve})\ (t - t_G)$

Given $x_o = 0$ and $v_o = 0$

$x_{30} = x_o + v_o \times t + (\text{area under a - t curve})_{0\text{-}30}\ (t - t_G)$

$= 0 + 0 + 30\,(30 - 20)$

$= 300 \text{ m}$

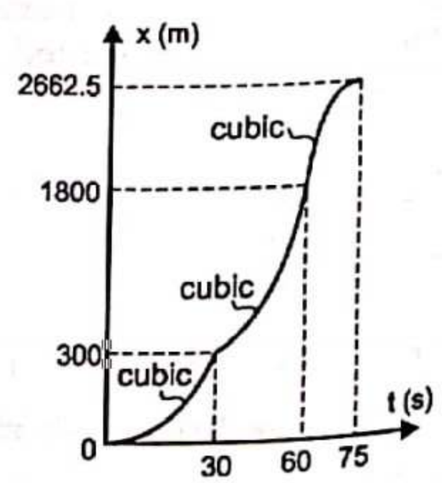

$x_{60} = x_{30} + v_{30} \times t + (\text{area under a - t curve})_{30\text{-}60}\ (t - t_G)$

$= 300 + 30 \times 30 + 30\,(30 - 10)$

$= 1800 \text{ m}$

$x_{75} = x_{60} + v_{60} \times t + (\text{area under a - t curve})_{60\text{-}75}\ (t - t_G)$

$= 1800 + 60 \times 15 + (-7.5)(15 - 10)$

$= 2662.5 \text{ m}$

From graph $v_{max} = 60$ m/s at t = 60 sec ..... **Ans.**

Ex. 9.33 The a – t curve for a particle performing rectilinear motion is shown. At t = 0 the particle's velocity is 5 m/s and the particle is located at 25 m to the left of the origin. Determine the velocity and position values at 6, 12 and 18 sec.

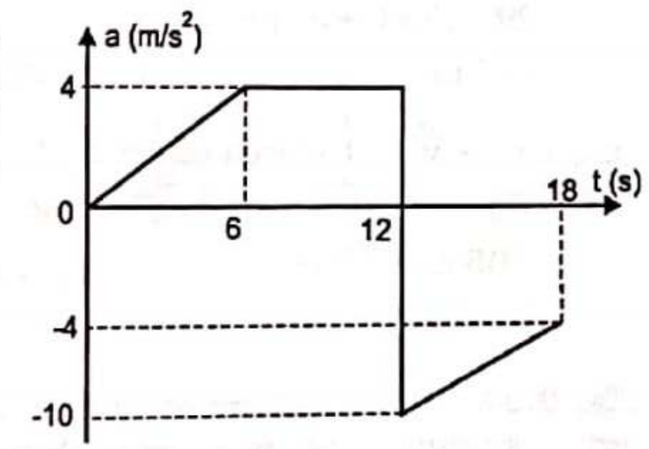

Solution: From graph, area under a – t curve,

0-6 sec = 1/2×6×4 = 12

0-12 sec = 6×4 = 24

12-18 sec = 1/2×6×6 + 6×4 = 18 + 24 = 42

Velocity calculations

From a – t curve velocity can be calculated using

$v_f = v_i + (\text{area under a – t curve})$

knowing $x_o = -25$ m and $v_o = 5$ m/s

$v_6 = v_o + (\text{area under a - t curve})_{0\text{-}6}$

$= 5 + 12$

$= 17 \text{ m/s}$ ..... **Ans.**

$v_{12} = v_6 + (\text{area under a - t curve})_{6\text{-}12}$

$= 17 + 24$

$= 41 \text{ m/s}$ ..... **Ans.**

$v_{18} = v_{12} + (\text{area under a - t curve})_{12\text{-}18}$

$= 41 + [-(18 + 24)]$ - ve sign ∵ area lies below t axis

$= -1 \text{ m/s}$ ..... **Ans.**

Position calculations

From a – t curve, position can be calculated using

$x_f = x_i + v_i \times t + (\text{area under a} - \text{t curve})(t - t_G)$

$x_6 = x_o + v_o \times t + (\text{area under a - t curve})_{0\text{-}6}\,(t - t_G)$

$= -25 + 5\times6 + 12\,(6 - 4)$

$= 29$ m ..... **Ans.**

$x_{12} = x_6 + v_6 \times t + (\text{area under a - t curve})_{6\text{-}12}\,(t - t_G)$

$= 29 + 17\times6 + 24\,(6 - 3)$

$= 203$ m .....**Ans.**

$x_{18} = x_{12} + v_{12} \times t + (\text{area under a - t curve})_{12\text{-}18}\,(t - t_G)$

$= 203 + 41\times6 + [-18\,(6 - 2) - 24\,(6 - 3)]$

$= 305$ m ..... **Ans.**

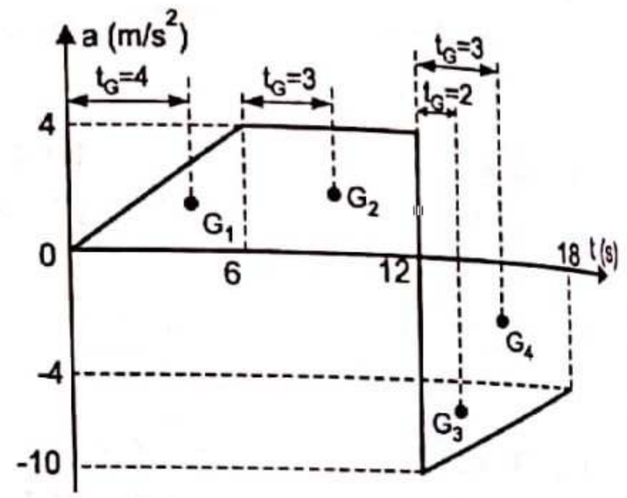

Ex. 9.34 The v – x graph of a car traveling on a straight road is shown. Determine the acceleration of the car at x = 25 m, x = 100 m and at x = 225 m.

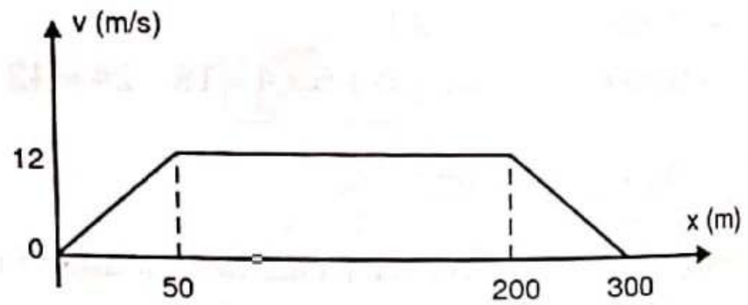

Solution: From (v – x) graph, the acceleration can be found out using

$a = v \times (\text{slope v} - \text{x curve})$

From graph at $x = 25$ m, $v = 6$ m/s

also $(\text{slope v} - \text{x curve}) = \dfrac{y_2 - y_1}{x_2 - x_1} = \dfrac{12 - 0}{50 - 0} = 0.24$

$\therefore \quad a_{x=25m} = 6 \times 0.24 = 1.44\ m/s^2$ ..... **Ans.**

From graph at $x = 100$ m, $v = 12$ m/s

also $(\text{slope v} - \text{x curve}) = 0$

$\therefore \quad a_{x=100m} = 12 \times 0$

$= 0$ ..... **Ans.**

From graph at $x = 225$ m, $v = 9$ m/s

also $(\text{slope v} - \text{x curve}) = \dfrac{y_2 - y_1}{x_2 - x_1} = \dfrac{0 - 12}{300 - 200} = -0.12$

$\therefore \quad a_{x=225m} = 9 \times (-0.12) = -1.08\ m/s^2$ ..... **Ans.**

Exercise 9.5

P1. Refer graph (1). Find acceleration at t = 10, 30, 45 and 50 sec.

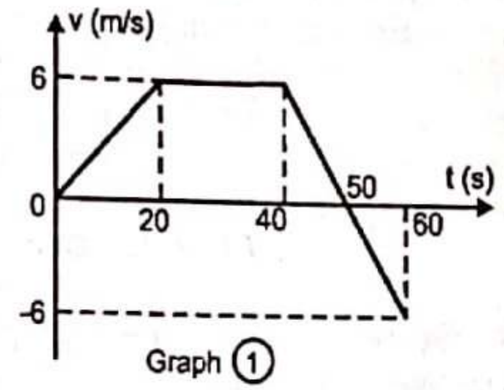

Graph (1)

P2. From graph (1) find position at t = 20, 40, 50 and 60 sec knowing $x_o = 0$. Also plot x – t curve.

P3. From graph (2) of a particle in rectilinear motion shown, Taking $x_0 = 10$ m, $v_0 = 5$ m/s, plot x – t and v – t curves.

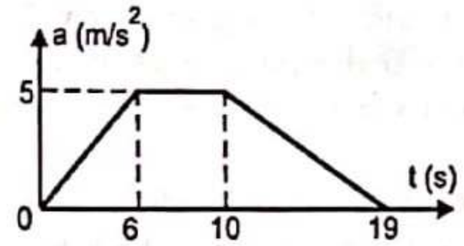

Graph (2)

P4. Figure shows a – t curve for a particle performing rectilinear motion. Knowing that at t = 0, v = 4 m/s and x = 20 m, find graphically the velocity and position of the particle at t = 9 sec.

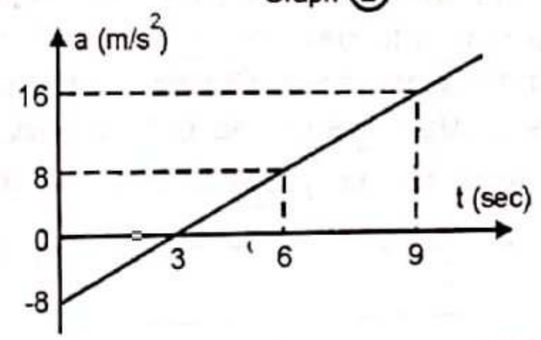

P5. The race car starts from rest and travels along a straight road until it reaches a speed of 42 m/s in 50 seconds as shown by v–t graph. Determine the distance travelled by race car in 50 seconds. Draw x–t and a–t graph.

(M.U May 08, KJS May 15)

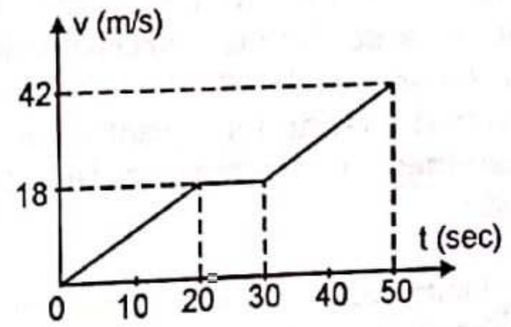

P6. For a particle performing rectilinear motion, the v – t diagram is shown. Draw a – t and x – t diagrams for the motion if at t = 2 sec, x = 20 m. What is the displacement during 6 – 10 sec ? Also find the total distance traveled.

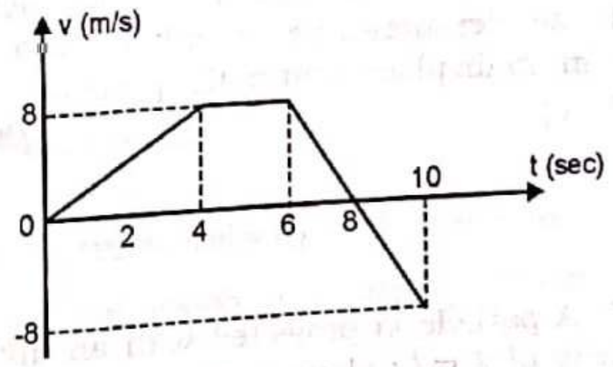

P7. Figure shows an a – t graph for a particle moving along the x axis. Draw v – t and x – t graphs and find the speed and position of the particle at t = 90 sec. Also find the maximum speed attained by the particle.

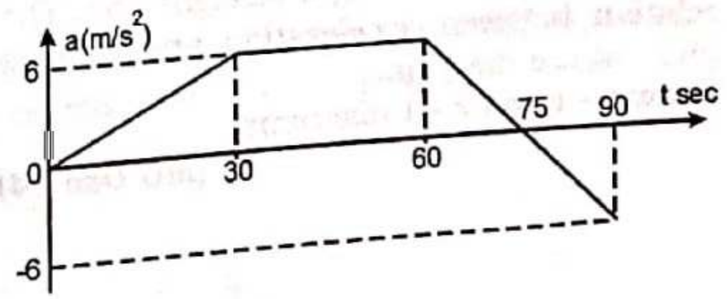

P8. A particle moves in a straight line with acceleration-time diagram shown in figure. Construct velocity-time diagram and displacement time diagram for the motion assuming that the motion starts with initial velocity of 5 m/s from the starting point.

(MU Dec 15, Dec 16, KJS May 17)

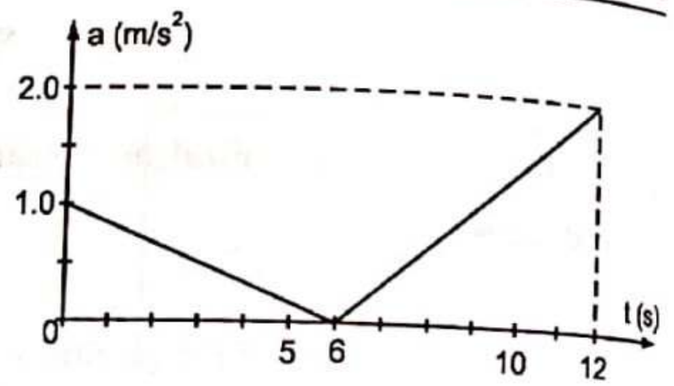

P9. Figure shows an a – t graph for a rectilinear moving particle. Construct v – t and x – t graphs for the motion. At t = 0 the particle is at x = 0 and its velocity is v = 3 m/s. ***(VJTI Apr 17)***

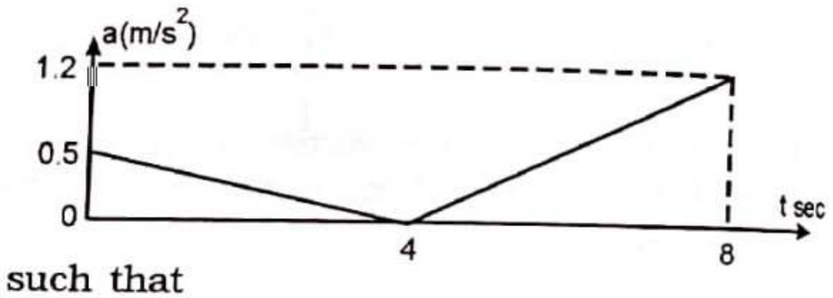

P10. A car moves along a straight road such that its velocity is described by the graph shown in figure. For the first 10 seconds the velocity variation is parabolic and between 10 seconds to 30 seconds the variation is linear. Construct the s – t and a – t graphs for the time period $0 \le t \le 30$ sec

(Hint: area under parabolic curve of base a and height $h = \frac{1}{3}ah$) ***(MU Dec 10)***

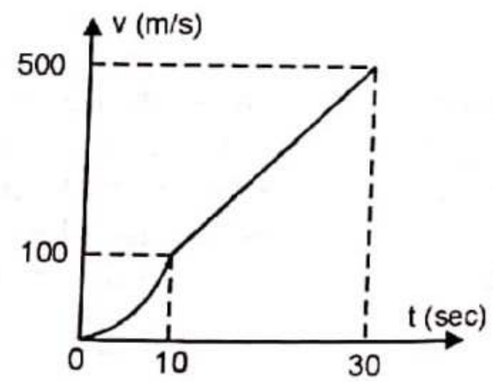

P11. The car starts from rest and travels along a straight track such that it accelerates at a constant rate for 10 sec. and then decelerates at a constant rate. Draw the v-t and s-t graphs and determine the time t' needed to stop the car. How far has the car travelled?

(MU May 09)

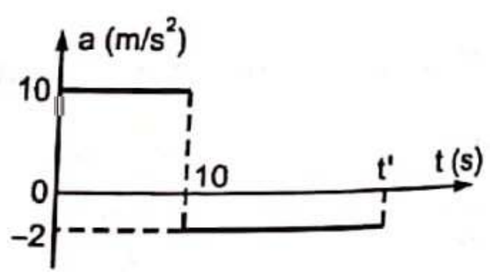

P12. Velocity time graph for a particle moving along a straight line is shown. Draw displacement-time and acceleration-time graphs. Also find the maximum displacement of the particle.

(MU May 11)

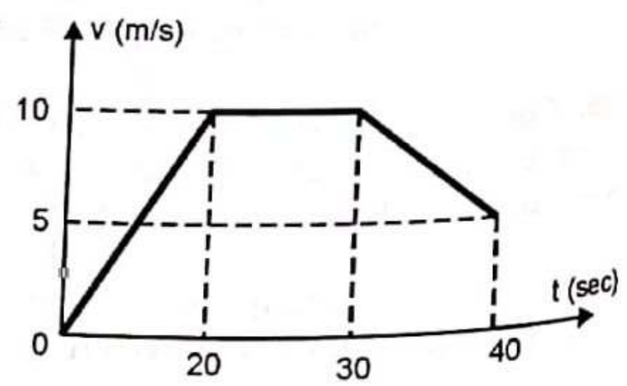

P13. A particle is projected with an initial velocity of 2 m/s along a straight line. The relation between acceleration and time is given in the diagram.

Draw v – t and x – t diagrams.

(MU Dec 14)

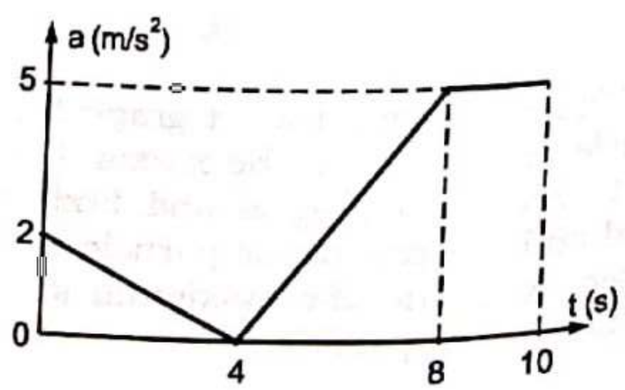

9.12 Relative Motion

So far the motion analysis was done from a fixed frame of reference, fixed to the earth. However if the motion analysis is undertaken from a moving frame of reference i.e observations by a person also in motion, then such analysis comes under relative motion.

Few examples of situations where relative motion analysis is done are

i) A person in a moving train observes another moving train on a parallel track.

ii) A captain of a moving ship observes the motion of other ships close to it.

iii) The pilot of a fighter plane observing a moving target before striking.

Figure shows two particles A and B moving independent of each other. Let $\bar{r}_A$ and $\bar{r}_B$ be their positions defined from a fixed frame of reference xoy, fixed at o.

If now A observes B, then A will find B to be occupying the position $\bar{r}_{B/A}$. This position is measured from a moving reference located at A. From the vector triangle so formed, we may write

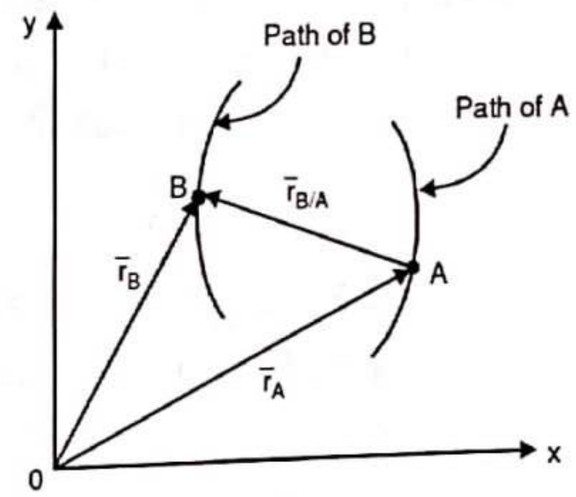

Fig. 9.16

$$\bar{r}_B = \bar{r}_A + \bar{r}_{B/A}$$

or $\bar{r}_{B/A} = \bar{r}_B - \bar{r}_A$ Relative position relation .....**[9.23]**

Differentiating the above relation w.r.t time, we have

$\bar{v}_{B/A} = \bar{v}_B - \bar{v}_A$ Relative velocity relation .....**[9.24]**

Further differentiating w.r.t time, we get

$\bar{a}_{B/A} = \bar{a}_B - \bar{a}_A$ Relative acceleration relation .....**[9.25]**

Here $\bar{r}_{B/A}$, $\bar{v}_{B/A}$ and $\bar{a}_{B/A}$ are the relative position, velocity and acceleration of B w.r.t A whereas $\bar{r}_B$, $\bar{v}_B$ and $\bar{a}_B$ are the absolute position, velocity and acceleration of particle B.

In general the absolute motion of any moving particle say B is the sum of absolute motion of another moving particle say A and the relative motion of B w.r.t A

Ex. 9.35 Three ships sail in different directions as shown. If the captain of ship C observes ship A, he finds ship A sailing at 3 m/s at θ = 60° ↙ Find
a) true velocity of ship A
b) velocity of B as observed by A
c) velocity of C as observed by B.

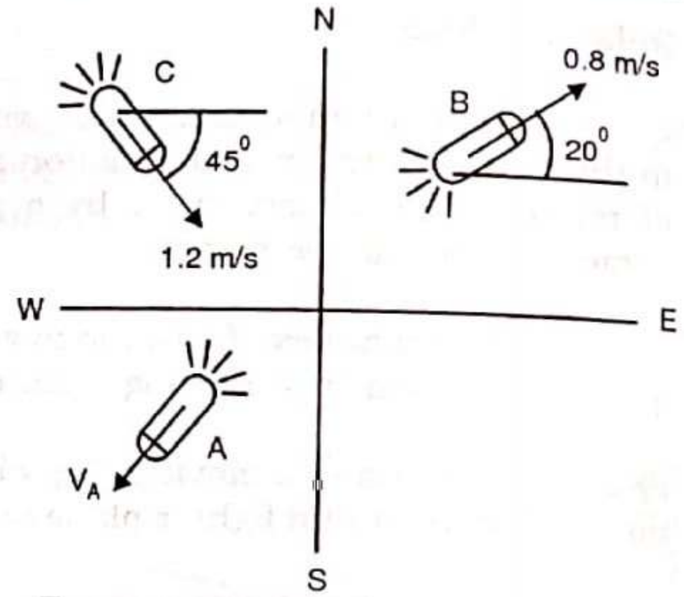

Solution:

a) Given: $v_B = 0.8$ m/s, θ = 20° ↗ $\therefore \bar{v}_B = 0.752\,i + 0.274\,j$ m/s

$v_C = 1.2$ m/s, θ = 45° ↘ $\therefore \bar{v}_C = 0.848\,i - 0.848\,j$ m/s

$v_{A/C} = 3$ m/s, θ = 60° ↙ $\therefore \bar{v}_{A/C} = -1.5\,i - 2.6\,j$ m/s

$$\bar{v}_{A/C} = \bar{v}_A - \bar{v}_C$$

$$-1.5\,i - 2.6\,j = \bar{v}_A - (0.848\,i - 0.848\,j)$$

$$\bar{v}_A = -0.652\,i - 3.45\,j \text{ m/s}$$

$v_A = 3.51$ m/s, θ = 79.3° ↙ ..... **Ans.**

b) $\bar{v}_{B/A} = \bar{v}_B - \bar{v}_A$

$= (0.752\,i + 0.274\,j) - (-0.652\,i - 3.45\,j)$

$= 1.404\,i + 3.724\,j$

$\bar{v}_{B/A} = 3.98$ m/s, θ = 69.34° ↗ ..... **Ans.**

c) $\bar{v}_{C/B} = \bar{v}_C - \bar{v}_B$

$= (0.848\,i - 0.848\,j) - (0.752\,i + 0.274\,j)$

$= 0.096\,i - 1.122$ m/s

$\bar{v}_{C/B} = 1.126$ m/s, θ = 85.1° ↘ ..... **Ans.**

Ex. 9.36 Figure shows the location of cars A and B at t = 0. Car A starts from rest and travels towards the intersection at a uniform rate of 2 m/s². Car B travels towards the intersection at a constant speed of 8 m/s. Determine relative position, velocity and acceleration of car B w.r.t car A. at t = 6 sec.

(KJS May 17)

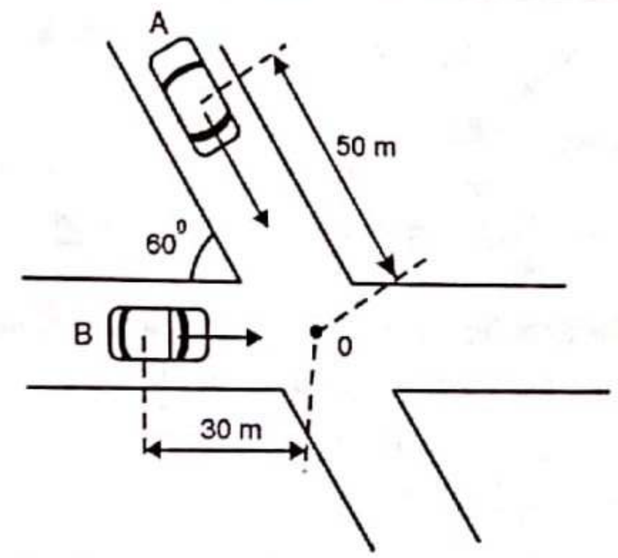

Solution:

Motion of Car A
Uniform acceleration
u = 0
v = ?
s = ?
a = 2 m/s²
t = 6 sec
Using v = ut + at
= 0 + 2 × 6
= 12 m/s

Motion of car B
Uniform velocity
v = 8 m/s
s = ?
t = 6 sec.

Using v = s/t
8 = s/6
∴ s = 48 m

Using $s = ut + \frac{1}{2}at^2$
$= 0 + \frac{1}{2} \times 2 \times (6)^2$
= 36 m

Relative position of B w.r.t A at t = 6 sec
car A is 50 – 36 = 14 m away from the origin.

$r_A = 14$ m at θ = 60° ↖

$\therefore \bar{r}_A = -7\,i + 12.12\,j$ m

$r_B = 48 - 30 = 18$ m to the right from the origin

$\therefore \bar{r}_B = 18\,i$ m

Now $\bar{r}_{B/A} = \bar{r}_B - \bar{r}_A$

$= 18i - (-7i + 12.12j)$

$= 25i - 12.12j$

$\bar{r}_{B/A} = 27.78$ m, θ = 25.86° ↘ ..... **Ans.**

Relative velocity of B w.r.t A at t = 6 sec

$v_A = 12$ m/s, θ = 60° ↘

$\therefore \bar{v}_A = 6i - 10.39\,j$ m/s

$v_B = 8$ m/s →

$\therefore \bar{v}_B = 8i$ m/s

Now $\bar{v}_{B/A} = \bar{v}_B - \bar{v}_A$

$= 8i - (6i - 10.39j)$

$= 2i + 10.39j$

$\therefore \quad v_{B/A} = 10.58 \text{ m/s}, \quad \theta = 79.1°$ ..... **Ans.**

Relative acceleration of B w.r.t A at t = 6 sec.

$a_A = 2 \text{ m/s}^2, \quad \theta = 60°$

$\therefore \quad \bar{a}_A = 1i - 1.732j \text{ m/s}^2$

also $\quad a_B = 0$

Now $\quad \bar{a}_{B/A} = \bar{a}_B - \bar{a}_A$

$\therefore \quad \bar{a}_{B/A} = 0 - (1i - 1.732j)$

$= -1i + 1.732j$

$\therefore \quad a_{B/A} = 2 \text{ m/s}^2, \theta = 60°$ ..... **Ans.**

Ex. 9.37 Two trains leave a station in different directions at the same instant. Train A travels at 360 kmph at 10° west of north, while train B travels at 450 kmph at 60° east of north. Find,

a) Relative velocity of train A w.r.t. train B.

b) The two trains are how much apart 2 minutes later.

(VJTI Dec 11)

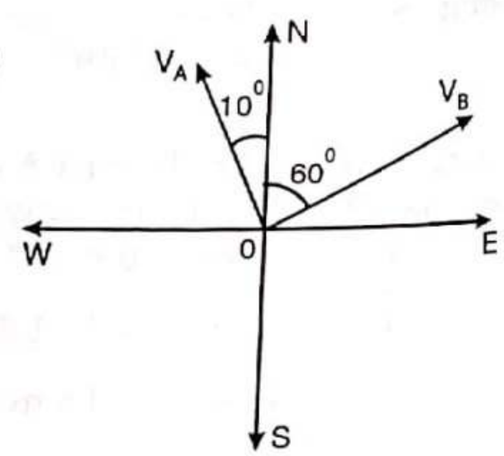

Solution: Given $\quad v_A = 360$ kmph, $\theta = 10°$

$\therefore \quad \bar{v}_A = -62.51\,\mathbf{i} + 354.5\,\mathbf{j}$ kmph

$v_B = 450$ kmph, $\theta = 60°$

$\therefore \quad \bar{v}_B = 389.7\,\mathbf{i} + 225\,\mathbf{j}$ kmph

using $\quad \bar{v}_{A/B} = v_A - v_B$

$\bar{v}_{A/B} = (-62.51\,\mathbf{i} + 354.5\,\mathbf{j}) - (389.7\,\mathbf{i} + 225\,\mathbf{j})$

$\bar{v}_{A/B} = -452.2\,\mathbf{i} + 129.5\,\mathbf{j}$ kmph

$\therefore \quad v_{A/B} = 470.37$ kmph, $\theta = 16°$ ..... **Ans.**

The above answer obtained implies that with respect to B (i.e keeping B stationary) A is moving uniformly at 470.37 kmph in a direction θ = 16° north of west. Let relative distance between A and B be $s_{A/B}$.

Using $\quad v = \dfrac{s}{t}$

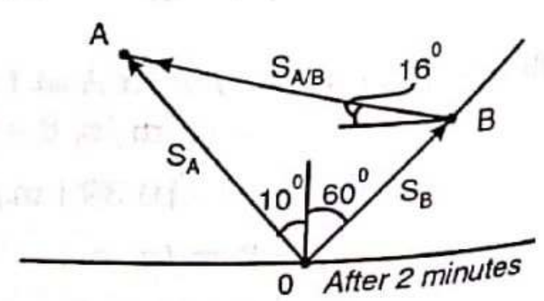

$\therefore \quad v_{A/B} = \dfrac{s_{A/B}}{t}$

$\therefore \quad 470.37 \times \dfrac{5}{18} = \dfrac{s_{A/B}}{2 \times 60} \quad \therefore \quad s_{A/B} = 15679$ m

Hence the two trains are 15679 m apart after 2 minutes. ..... **Ans.**

Exercise 9.6

P1. A ship A travels in the north making an angle of 45° to the West with a velocity of 18 km/hr and ship B travels in the East with a velocity of 9 km/hr. find the relative velocity of B w.r.t. ship A. ***(MU Dec 13)***

P2. Two ships leave a port at the same time. The first moves in North-West direction at 54 kmph and second at 35° South of West at 36 kmph. Find,

(a) the relative velocity of second ship with respect to the first.

(b) the distance between them after 30 min

(c) After what time they will be 50 km apart. ***(NMIMS July 16)***

P3. a) Two ships move from a port at the same time. Ship 'A' has velocity of 30 km/hr and is moving North 30° West, while ship 'B' is moving in South-West direction with a velocity of 40 km/hr. Determine relative velocity of 'A' w.r.t. 'B'. ***(MU May 09)***

b) Also find the gap between the ships 2 hrs. later.

P4. Ship A has a velocity of 45 kmph due east relative to ship B, which in turn has a velocity of 60 kmph at 30° South of West relative to ship C. Find the velocity of A relative to C.

P5. a) A train running at 60 kmph to the right is struck by a stone thrown at right angles to the train with a speed of 10 m/s. Find the velocity and direction with which the stone appears to strike the train, to a person sitting at the window in the train.

b) Solve if velocity of train is 36 kmph & velocity of stone =18 kmph. ***(VJTI Nov10, Apr17)***

P6. Trains A and B are traveling on parallel tracks in opposite directions. Velocity of A is thrice the velocity of B. The trains take 20 sec to cross each other. Determine the velocities of the trains knowing that train A is 260 m long and train B is 300 m long.

P7. At t = 0 the location of cars A and B are shown. The cars travel towards the intersection. Car A has a speed of 10 m/s and a deceleration of 1.5 m/s². Car B starts from the rest and accelerates at 2 m/s². Determine at t = 3 sec the relative position, velocity and acceleration of car B w.r.t car A.

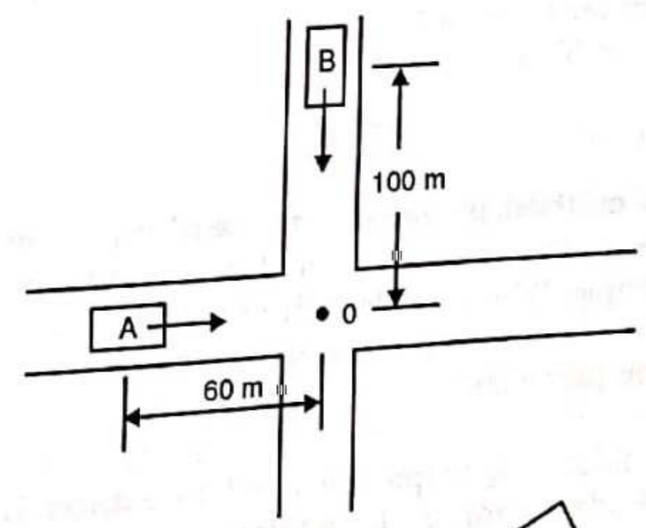

P8. Wedge B travels to the left with acceleration of 2 m/s², while block A travels up the slope of the wedge with an acceleration of 1 m/s² relative to the wedge. Determine the true velocity of the block at t = 5 sec after starting from rest.

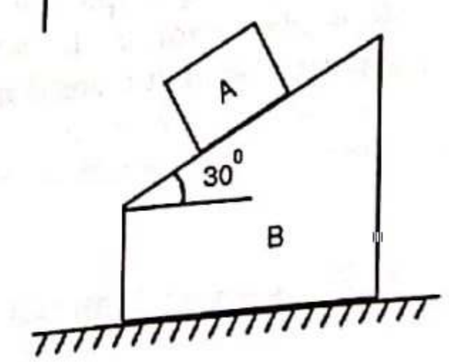

P9. A man walking on a straight path at 15 kmph finds that the rain is falling at an angle of 45° to the vertical. As the man increases his speed to 20 kmph, he finds the rain now falling at 30° with the vertical. What is the true velocity of the rain. Refer Figure.

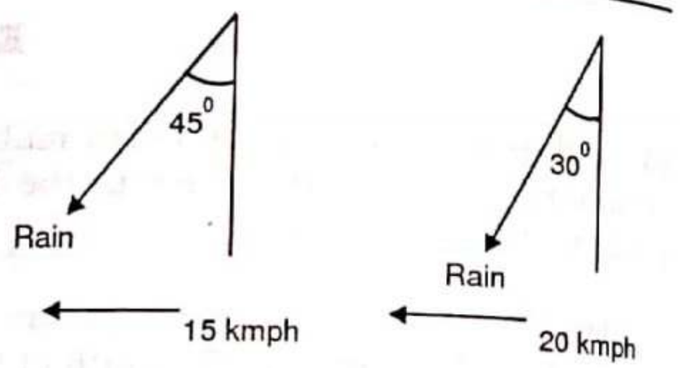

9.13 Dependent Motion

Let us first understand independent motion. Vehicles moving on a highway, lifts travelling in parallel vertical shafts, ships moving in the sea etc are examples of independent motion of particles. Motion of independent moving particles are related using relative motion equations.

In a dependent motion system, the motion of a particle is dependent on motion of another or several other particles in the system. The particles forming a dependent motion system are usually connected to each other by one or more ropes/strings.

In Fig. 9.17, motion of counter weight W and the lift C form a dependent motion system. In Fig. 9.18, blocks A, B and C form a dependent motion system.

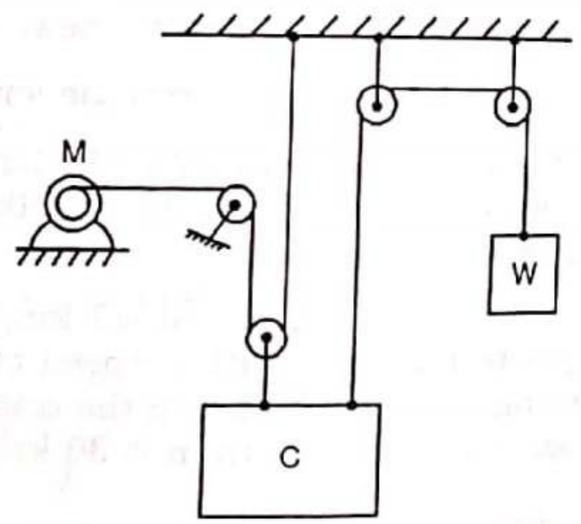

Fig. 9.17

To find a relation between the position, velocities and acceleration of the dependent particles, we have a method known as Constant String Length Method (C S L M).

9.13.1 C S L M

This method is used to relate the position, velocity and acceleration of two or more particles connected by a common string. This method is based on the principle "The total length of the connecting string in terms of variable positions of the various particles connected to it is a constant what ever be the positions of the particles".

The following steps are used to establish kinematics relations using CSLM for dependent motion. Lets take a example of three moving blocks A, B and C whose position, velocities and acceleration relations are required to be found out.

Step 1: Take a fixed reference axis perpendicular to the direction of motion of the moving particles. If the particles move in the same direction only one reference axis will do. If they move in different direction, for every direction a reference axis is required.

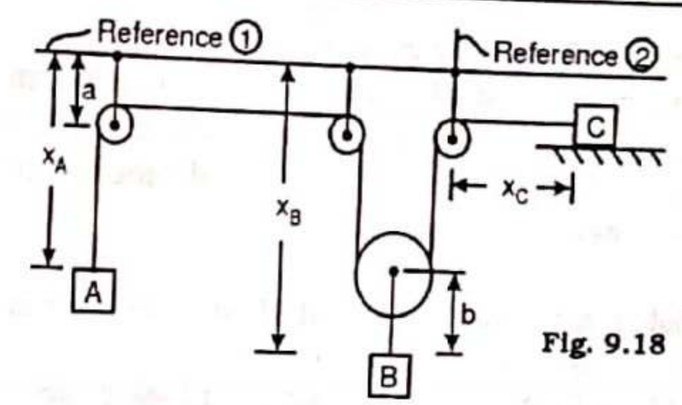

Fig. 9.18

In the given example blocks A and B move in the vertical direction hence for them we take a horizontal fixed reference (1). Block C moves horizontally for which we have taken a vertical fixed reference (2).
From the horizontal reference (1) mark the variable position x_A and x_B of blocks A and B respectively. From the vertical reference (2) mark the variable position x_C of block C.

Step 2: Measure the length L of the string in terms of variables x_A, x_B and x_C.
Here $L = x_A + 2x_B + x_C \pm$ constant ..... (1)
Note that some constants which are added are string portions wrapped over the pulley, while some constants are subtracted like constant a and b which are lengths from the centre of pulley to the reference axis or moving particles.

Step 2: correction to equation (1)
In this step a negative sign is attached to the variable which decreases with time during the motion.

In the example taken up, say if B was moving down, then A would travel up and C would travel to the left. In the process the variable x_B increases with time, while variables x_A and x_C decrease with time. We therefore correct equation (1) and get equation (2).

$$L = (-x_A) + (2x_B) + (-x_C) \pm \text{constant} \quad \text{..... (2)}$$

Step 3: Differentiate the corrected relation (2) w.r.t. time

$$0 = -v_A + 2v_B - v_C \quad \text{..... (3)}$$

The above equation (3) is the relation between the velocities of particles A, B and C.

Step 4: Differentiate equation (3) again w.r.t time

$$0 = -a_A + 2a_B - a_C \quad \text{..... (4)}$$

The above equation (4) is the relation between the acceleration of particles A, B and C.

Step 5: Note that the position, velocity and acceleration relations developed through equations (2), (3) and (4) are scalar relations (relating only the magnitude), since the direction of motion of the particles have already been accounted by correction to equation (1).

The following examples will help us to understand the application of CSLM.

Ex. 9.38 Knowing that at t = 0 block A has a velocity of 8 m/s (←) and uniform acceleration of 0.6 m/s² (→) determine the velocity and acceleration of block B at t = 5 sec.

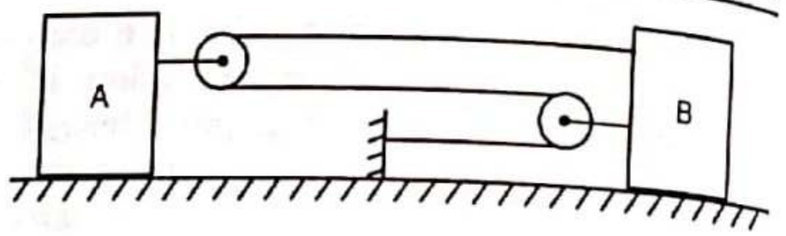

Solution: Blocks A and B are two particles connected by a common string forming a dependent motion system.

Let us first find out velocity of block A at t = 5 sec. Block A has a velocity directed to the left indicates that it is moving towards left. However its acceleration is directed to the right indicates that it is decelerating.

Motion of block A – Uniform acceleration motion

$u = 8$ m/s

$v = ?$

$s = -$

$a = -0.6$ m/s²

$t = 5$ sec

using $v = u + at$

$= 8 + (-0.6) \times 5$

$= 5$ m/s² (←)

Using CSLM Let us find the velocity relation and acceleration relation of blocks A and B

Since the blocks are moving horizontally, taking a vertical fixed reference at the rigid wall

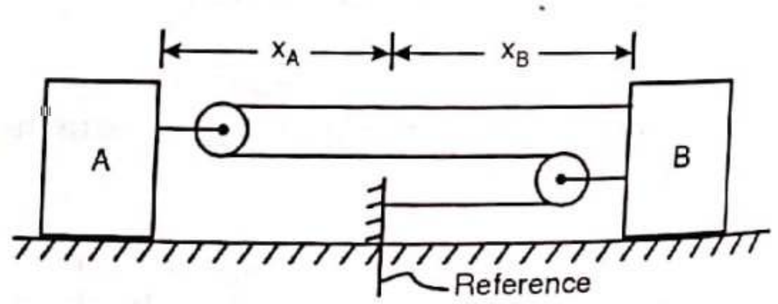

The total length L of the string in terms of variable position x_A and x_B is

$L = 2x_A + 3x_B \pm$ constants ..... (1)

with time the variable x_A would increase, while x_B decreases. Correcting equation (1) for the same , we have

$L = 2x_A + (-3x_B) \pm$ constants ..... (2)

Differentiating w.r.t time, we get

$0 = 2v_A - 3v_B$ ..... (3)

Differentiating again w.r.t time, we get

$0 = 2a_A - 3a_B$ ..... (4)

Putting $v_A = 5$ m/s in equation (3), we get

$0 = 2(5) - 3v_B$

$\therefore \quad v_B = 3.33$ m/s (←) ..... **Ans.**

Putting $a_A = 0.6$ m/s in equation (4), we get

$0 = 2(0.6) - 3v_B$

$\therefore \quad a_B = 0.4$ m/s² (→) ..... **Ans.**

Ex. 9.39 Knowing that the block A moving up the slope has an acceleration of 2 m/s², determine the acceleration of block B.

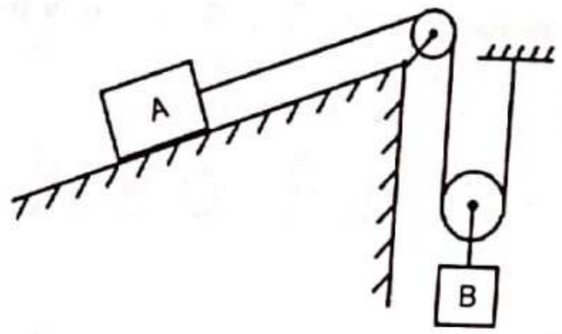

Solution: Motion of block B is dependent on block A and vice versa

Using CSLM to get the acceleration relation between the two blocks

Taking fixed references as shown in the figure. The total length L of the string in terms of variable position x_A and x_B is

$L = x_A + 2x_B \pm$ constants ..... (1)

with time the variable x_A would decrease, while x_B would increase. Correcting equation (1) for the same , we have

$L = (-x_A) + 2x_B \pm$ constants ..... (2)

Differentiating twice w.r.t time, we get

$0 = -a_A + 2a_B$ ..... (3)

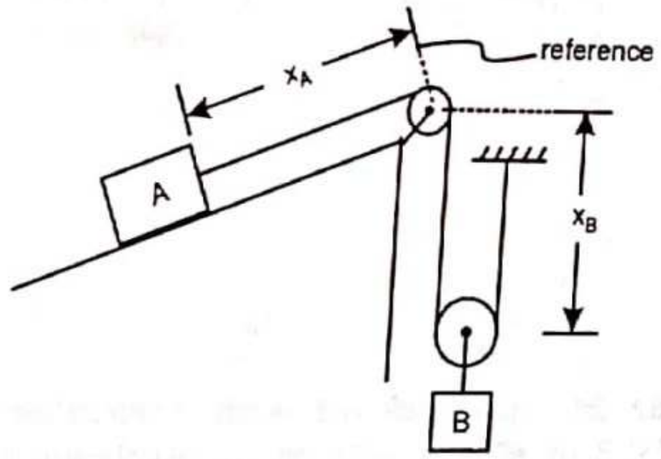

Putting $a_A = 2$ m/s² in equation (3), we get

$0 = -2 + 2a_B$

$\therefore \quad a_B = 1$ m/s² (↓) ..... **Ans.**

Exercise 9.7

P1. If block A moves down with an acceleration of 2.5 m/s², determine the corresponding acceleration of block B.

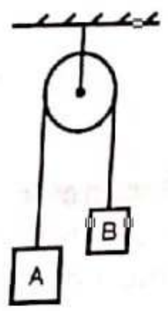

P2. Knowing that the block A is moving up with a velocity v_A and acceleration a_A, determine the corresponding velocity and acceleration of block B.

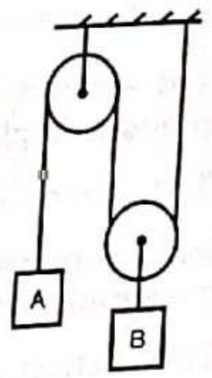

P3. Blocks A and B are connected by an inextensible string as shown. If block B moves to the right, starting from rest with constant acceleration of 3 m/s².

a) Find the acceleration of block A.

b) The velocity of block A at t = 8 sec.

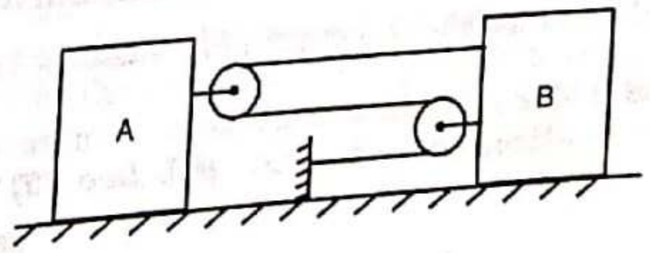

P4. Knowing velocity of A is 3 m/s to the right and that of B is 4 m/s to the left, determine the velocity of block C.

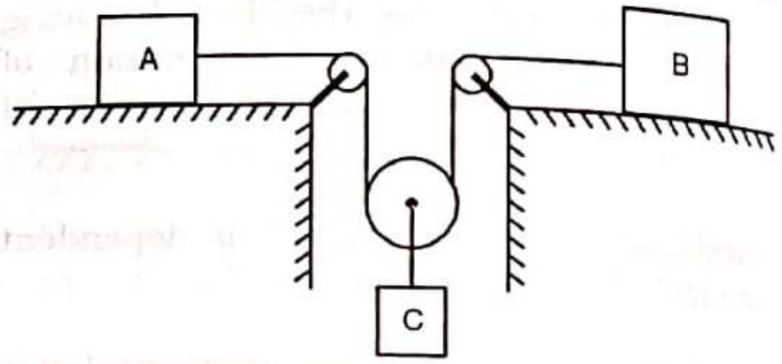

P5. Knowing acceleration of block B = 3 m/s² ↑, determine the acceleration of block A.

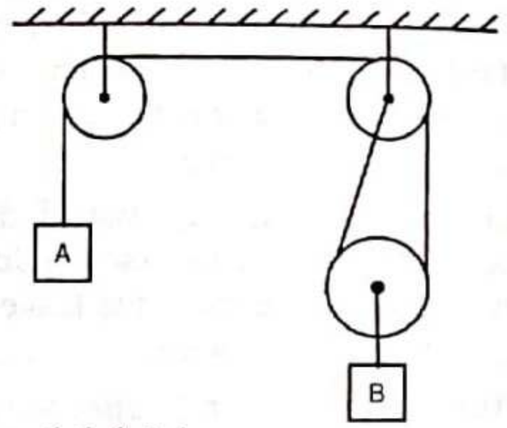

P6. Knowing block A has an acceleration of 0.8 m/s² ↓, determine the acceleration of block B.

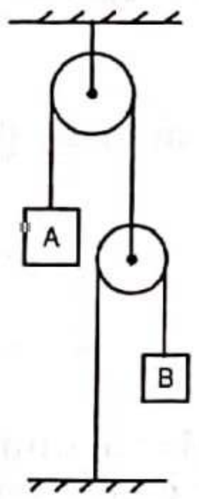

Exercise 9.8

Theory Questions

Q.1 What are different branches of dynamics? Explain with suitable examples. ***(VJTI Nov 09)***

Q.2 State the different types of Particle Motion

Q.3 What are the different types of Rectilinear Motions and list the corresponding equations applicable.

Q.4 What is normal acceleration & tangential acceleration. ***(MU Dec07, VJTI Apr17)***

Q.5 Derive expression for maximum height and maximum range for a projectile on a horizontal surface. ***(MU. Dec 07)***

Q.6 Write a short note on Motion Curves. ***(MU May 11, VJTI Dec 11, Nov 12)***

Q.7 Draw motion curves for constant velocity case. ***(VJTI May 09)***

Q.8 Prove that area under a–t curve gives velocity and area under v–t curve gives displacement. ***(MU Dec 07)***

★ ★ ★

Chapter 10

Kinetics of Particles: Newton's Second Law

10.1 Introduction

So far in the earlier chapter we did the motion analysis of moving particles without taking into account the forces responsible for the motion. From this chapter we begin our motion analysis involving the forces responsible for the motion. This analysis is known as *kinetics*. Here we will analyse motion of moving cars, elevators, blocks, airplanes, rockets etc. treating them as a particle, since rotation of these bodies about their own centre of gravity, if any, is neglected.

In this chapter we will extensively use the Newton's Second Law approach to kinetics. As stated further, this approach involves determination of acceleration of the moving particle by knowing the forces acting on the particle. Having determined the acceleration, the analysis is completed using kinematic relations which we have studied in previous chapter.

10.2 Newton's Second Law of Motion

Newton's second law of motion states "*The rate of change of momentum of a body is directly proportional to the resultant force and takes place in the direction of the force*".

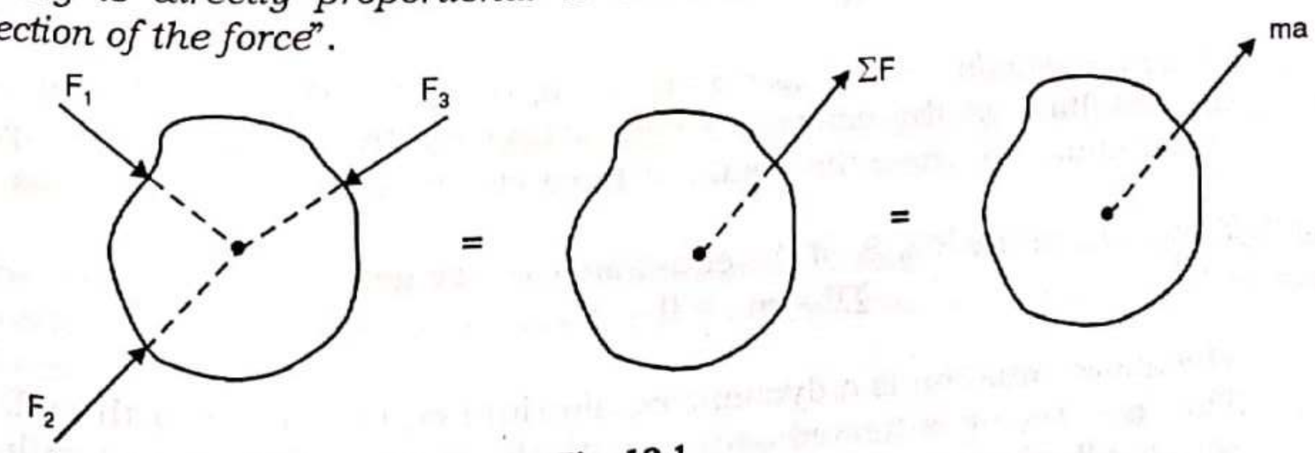

Fig. 10.1

Consider a particle acted upon by several forces as shown in Fig. 10.1. Let ΣF be the resultant force. Because of the resultant force, the particle would move in the direction of the resultant force. If u is the initial velocity, v is final velocity and this change takes place in t sec, we have from Newton's second law:

Rate of change of Momentum = Resultant Force

i.e. $$\frac{\text{Final momentum - Initial momentum}}{\text{Time}} = \Sigma F$$

$$\frac{mv - mu}{t} = \Sigma F$$

$$\Sigma F = m\frac{(v-u)}{t}$$

or $$\Sigma F = ma \qquad \text{.....[10.1]}$$

Equation 10.1 is the mathematical expression of Newton's Second Law and this gives rise to another statement of Newton's Second Law, which is "*If the resultant force acting on a particle is not zero, the particle will have an acceleration proportional to the magnitude of the resultant and in the direction of the resultant force*".

Equation 10.1 is a vector relation since both the force and acceleration are vector quantities. The scalar relations from 10.1 can be developed as,

$$\Sigma F_x = ma_x \qquad \text{..... [10.2 (a)]}$$
$$\Sigma F_y = ma_y \qquad \text{..... [10.2 (b)]}$$
$$\Sigma F_z = ma_z \qquad \text{..... [10.2 (c)]}$$

Since we will normally restrict our analysis to coplanar forces, the equations 10.2 (a) and 10.2 (b) will be mainly used.

10.3 D' Alembert's Principle

Referring to equation 10.1 we have

$$\Sigma F = ma$$

This is Newton's Second Law equation and relates the particle's acceleration to the resultant of the external forces acting on the particle. The equation is a vector equation where the resultant force vector is equated to the ma vector.

Transposing the R.H.S. of the equation 10.1 we get,

$$\Sigma F - ma = 0 \qquad \text{.....[10.3]}$$

The above equation is a dynamic equilibrium equation put forth by D' Alembert. The ma vector is treated as an inertia force and when added with a negative sign to all other forces, results in equilibrium state of particle.

Figure shows the dynamic equilibrium state of
1) a block sliding down a rough inclined plane
2) a sphere tied to a string, swinging as a pendulum to a lower position.

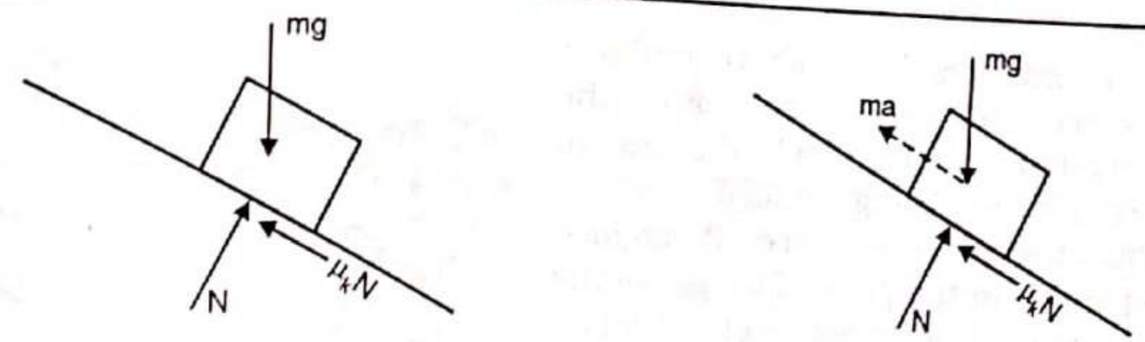

Actual forces acting on the block

Actual forces + Inertia force creates a state of dynamic equilibrium.

Fig. 10.2 (a)

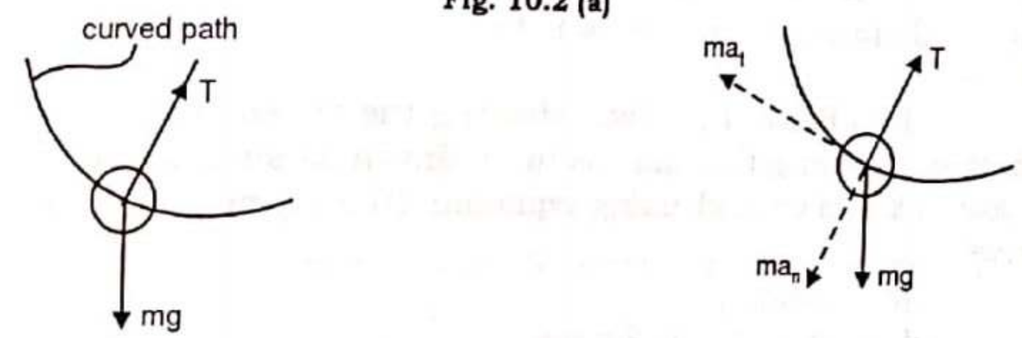

Actual forces acting on the pendulum

Actual forces + Inertia forces create a state of dynamic equilibrium

Fig. 10.2 (b)

Particle's acceleration can be found out by D'Alembert's principle, by developing the figure representing a dynamic state and using the equilibrium equations used in static viz., $\Sigma F_x = 0$ and $\Sigma F_y = 0$

Newton's Second Law approach to kinetics is more realistic than the D'Alembert's principle since it does not involve inertia forces and does nor refer to an equilibrium state of a moving particle. We would therefore solve the problems in kinetics involving forces and acceleration using Newton's Second Law equation.

10.4 N S L Equations Applied to Rectilinear Motion

Application of Newton's equations to determine the acceleration of rectilinear moving particles should be carried out by a systematic approach as explained below.

Step (1) Draw the FBD showing all the forces acting on the moving particle. If more than one particle is involved, the particles may be isolated and separate FBD may be drawn.

Step (2) By the side of FBD, draw the Kinetic Diagram (KD) which shows the particle with a ma vector acting on it. The magnitude of ma vector is the product of particle's mass and its acceleration. ma vector acts in the direction of particle's acceleration.

Step (3) Equations of Newton's second law viz 10.2 (a) and 10.2 (b) are now used, taking help of the FBD and KD drawn earlier. The particle's acceleration is thus obtained.

To understand the above outlined steps, let us find out the acceleration of a block of mass m which is being pulled up an inclined plane by force P applied parallel to the plane. Let μ_k be the kinetic coefficient of friction between the block and plane. As the block moves up, the rough inclined surface develops a frictional force = $\mu_k N$ down the plane.

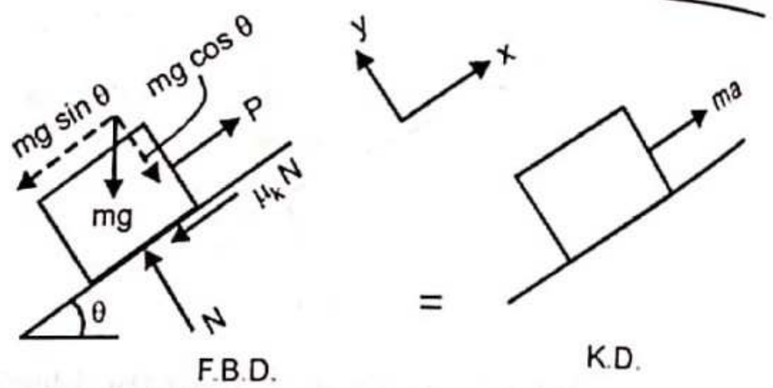

Fig. 10.3

The FBD of the block showing the forces and the corresponding Kinetic Diagram showing the ma vector is drawn as shown in figure. Taking the x and y axes as shown and using equation 10.2 (a) of the Newton's Second Law we have,

$\sum F_x = ma_x$

$P - m\,g \sin\theta - \mu_k N = ma$ ..... (1)

$\sum F_y = ma_y$

$N - m\,g \cos\theta = 0$ .....(2) Since there is no component of ma vector in the y direction.

Substituting the value of N from equation (2) in (1)

$$P - m\,g \sin\theta - \mu_k (m\,g \cos\theta) = ma$$

$$\therefore \quad a = \frac{P - mg(\sin\theta - \mu_k \cos\theta)}{m}$$

Thus knowing the forces acting on the particle, its acceleration can be found out.

Ex. 10.1 A motorist travelling at a speed of 90 kmph suddenly applies the brakes and comes to rest after skidding 100 m. Determine the time required for the car to stop and coefficient of friction μ_k between the tyres and the road.

Solution: Kinematics: The car per performs rectilinear motion with uniform acceleration.

u = 90 kmph = 25 m/s, v = 0, s = 100 m, a = a m/s², t = t sec.

Using $v^2 = u^2 + 2as$

$0 = 25^2 + 2 \times a \times 100$

$\therefore \quad a = -3.125 \text{ m/s}^2$

Using $v = u + at$

$0 = 25 + (-3.125) \times t$

$\therefore \quad t = 8$ sec

Kinetics: Using Newton's second law

Applying NSL equations

Using $\sum F_y = ma_y$

$N - mg = 0$

$\therefore \quad N = mg$

Using $\sum F_x = ma_x$

$-\mu_k . N = ma$

$-\mu_k . mg = m(-3.125)$

$\therefore \quad \mu_k = 0.318$ ..... **Ans.**

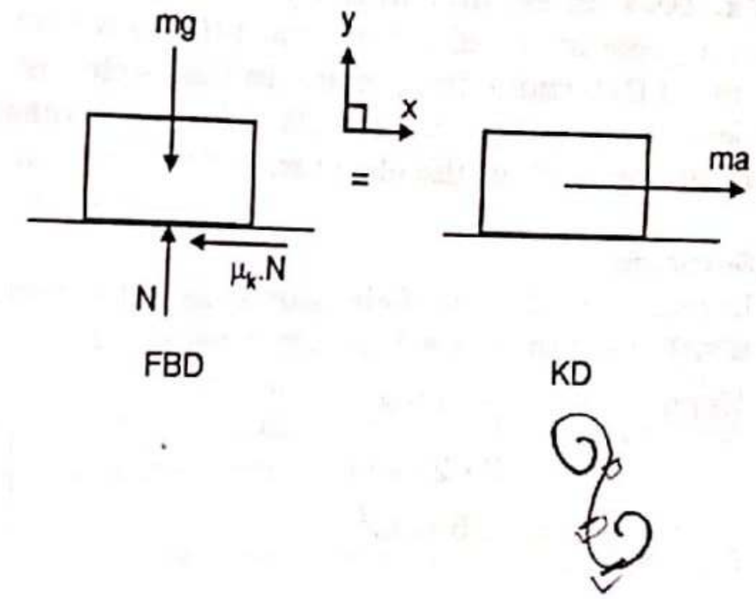

Ex. 10.2 A 500 N crate kept on the top of a 15° sloping surface is pushed down the plane with an initial velocity of 20 m/s. If μ_s = 0.5 and μ_k = 0.4, determine the distance traveled by the block and the time it will take as it comes to rest. ***(MU Dec 17)***

Solution: Applying equation of Newton's Second Law

$\sum F_y = ma_y$

$N - 500 \cos 15 = 0$

$\therefore \quad N = 482.96$ Newton

$\sum F_x = ma_x$

$500 \sin 15 - \mu_k N = ma$

$500 \sin 15 - 0.4\,(482.96) = \left(\frac{500}{9.81}\right) a$

$\therefore \quad a = -1.25 \text{ m/s}^2$

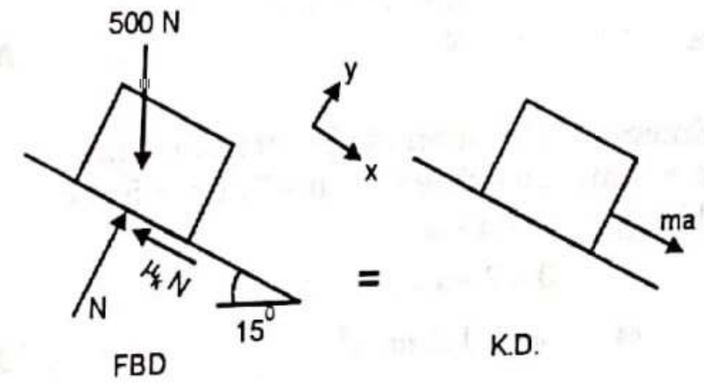

The block travels down the slope with a – ve acceleration i.e deceleration of 1.25 m/s².

Kinematics

This is a case of Rectilinear motion – Uniform acceleration

u = 20 m/s, v = 0, s = ?, a = – 1.25 m/s², t = ?

Using

$v^2 = u^2 + 2as$

$0 = (20)^2 + 2 \times (-1.25) \times s$

$\therefore \quad s = 160$ m ..... **Ans.**

using

$v = u + at$

$0 = 20 - 1.25 \times t$

$t = 16$ sec ..... **Ans.**

Ex. 10.3 An elevator with a person inside, of total mass 500 kg starts moving upwards at a constant acceleration and attains a velocity of 3 m/s after traveling a distance of 3m. i) Determine the tension in the cable ii) If after attaining the velocity of 3 m/s the elevator stops in 2.5 seconds. Find the pressure exerted by the elevator to the person weighing 600N in the elevator. ***(VJTI Nov 09)***

Solution:

Kinematics: Motion of elevator stage (1) is rectilinear motion with uniform acceleration.

u = 0, v = 3 m/s, s = 3 m, a = ?, t = -

Using $v^2 = u^2 + 2as$

$3^2 = 0 + 2 \times a \times s$

$\therefore \quad a = 1.5 \text{ m/s}^2$

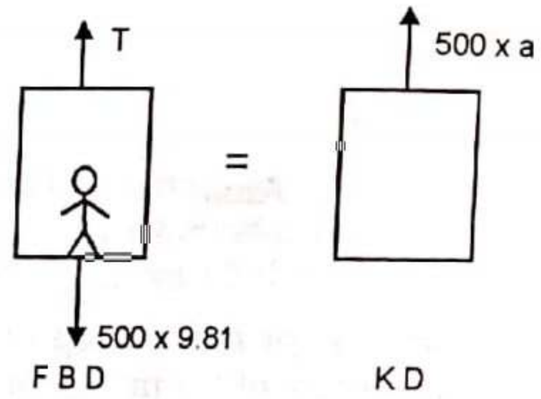

Kinetics of elevator

Let T be the tension entire cable

Applying NSL

$\Sigma F_y = ma_y \quad \uparrow +ve$

$T - 500 \times 9.81 = 500 \times a$

$T - 4905 = 500 \times 1.5$

or $\quad T = 5655 \text{N}$ ..... **Ans.**

Kinematics: Motion of elevator stage (2)

u = 3 m/s, v = 0, s = –, a = ?, t = 2.5 sec.

Using $\quad v = u + at$

$0 = 3 + a \times 2.5$

or $\quad a = -1.2 \text{ m/s}^2$ ..... **Ans.**

Kinetics of person inside the elevator

Let us isolate the person. Let N be the normal reaction the person receives from the floor of the elevator.

Applying N S L

$\Sigma F_y = ma_y \quad \uparrow +ve$

$N - 600 = \frac{600}{9.81} \times a$

$N - 600 = 61.62 \times (-1.2)$

or $\quad N = 526.6 \text{ N}$ ..... **Ans.**

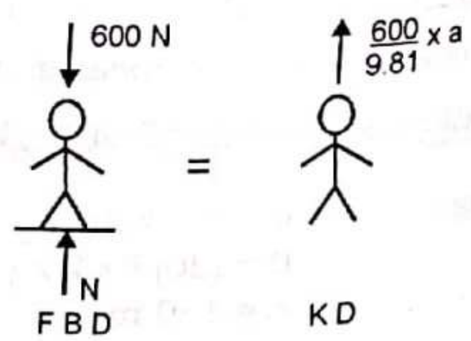

Ex. 10.4 Two blocks A and B are held stationary 10 m apart on a 20° inclined plane as shown. The kinetic coefficient of friction between A and plane is 0.3 and between B and plane is 0.1. If the blocks are released simultaneously, calculate the time taken and distance traveled by each block before they are on the verge of collision.

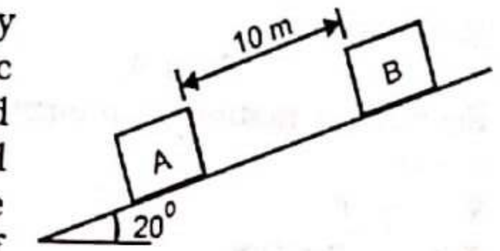

Solution: The motion of a particle down an inclined plane under the action of its weight component is a case of rectilinear motion with uniform acceleration. The acceleration depends on the value of coefficient of kinetic friction μ_k and on the angle of inclination θ of the plane and is independent of the weight of the body.

Let us consider a general case of a block of weight W moving down an inclined plane of angle θ.

Applying Newton's Second Law

$\Sigma F_y = ma_y$

$N - W \cos\theta = 0$

$\therefore \quad N = W \cos\theta$ ..... (1)

$\Sigma F_x = ma_x$

$W \sin\theta - \mu_k N = ma$ ..... (2)

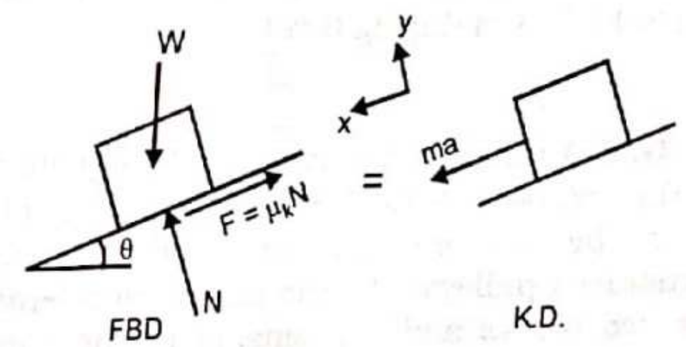

Substituting for N from (1) in (2)

$W \sin\theta - \mu_k (W \cos\theta) = \frac{W}{g} a$

$\therefore \quad a = g (\sin\theta - \mu_k \cos\theta)$ ..... (3)

The above is a general relation of acceleration of a freely sliding particle on a rough inclined plane.

$\therefore$ For block A, $\quad \mu_k = 0.3$ and $\theta = 20°$

We get $\quad a_A = 9.81 (\sin 20 - 0.3 \cos 20)$

$= 0.5897 \text{ m/s}^2$

Also for block B, $\quad \mu_k = 0.1$ and $\theta = 20°$

We get $\quad a_B = 9.81 (\sin 20 - 0.1 \cos 20)$

$= 2.433 \text{ m/s}^2$

Since the acceleration of B is more than of A, the two blocks will soon collide. We therefore need to perform kinematics analysis. Let A travel x metres before B collides. Therefore B travels (x + 10) metres during the same time interval.

Kinematics

Block A	Block B
Rectilinear motion – Uniform acceleration	Rectilinear motion – uniform acceleration
$u = 0$	$u = 0$
$v = -$	$v = -$
$s = x$ metres	$s = x + 10$ metres
$a = 0.5897\ m/s^2$	$a = 2.433\ m/s^2$
$t = t$ sec	$t = t$ sec
Using $s = ut + ½\ at^2$	Using $s = ut + ½\ at^2$
$x = 0 + ½ \times 0.5897 \times t^2$ ..... (4)	$(x + 10) = 0 + ½ \times 2.433 \times t^2$

Solving equations 4 and 5, we get
$x = 3.198$ m and $t = 3.294$ sec

The two blocks collide 3.294 sec after release. Block A travels 3.198 m and block B travels 13.198 m during this time. .....**Ans.**

Ex. 10.5 A package A of mass 25 kg is being pulled up the incline by a load B of mass 60 kg connected to it by an inextensible rope passing over frictionless pulleys. Determine the accelerations of the two blocks and the tension in the connecting rope. Take $\mu_s = 0.4$ and $\mu_k = 0.3$ between the incline and A.

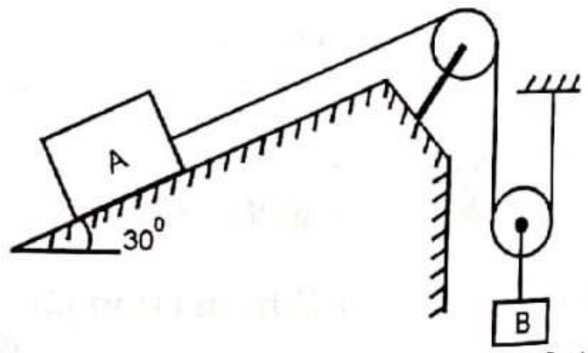

Solution: Downward movement of load B causes package A to slide up the plane. Let us develop the relation between the accelerations of A and B using Constant String Length Method (CSLM).

Let variables x_A and x_B define the positions of A and B. As x_B increases, x_A would decrease. If L is the length of string, then the length L is the sum of string portions in terms of x_A and x_B and plus/minus constants (constants are the string portions which don't change during motion like the length of cord wrapped over the pulleys).

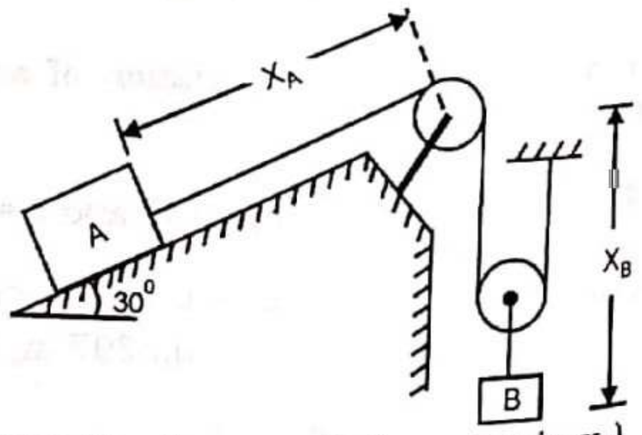

$\therefore \quad L = (2\ x_B) + (-\ x_A) \pm$ constants (x_A is – ve because it reduces with increase in x_B)

Differentiating w.r.t time

$$0 = 2\ v_B - v_A$$

Differentiating again w.r.t time

$$0 = 2\ a_B - a_A \quad \text{or} \quad a_A = 2\ a_B \quad \text{..... (1)}$$

Let us isolate A and B and perform kinetic analysis of each of them

Kinetics of package A

Applying equations of Newton's second law to A

$\Sigma F_y = ma_y$

$N - 245.25 \cos 30 = 0$

$N = 212.39$ Newton

$\Sigma F_x = ma_x$

$T - 245.25 \sin 30 - 0.3\,N = m_A a_A$

$T - 245.25 \sin 30 - 0.3(212.39) = 25\ a_A$

$T - 186.34 = 25\,a_A$ .....(2)

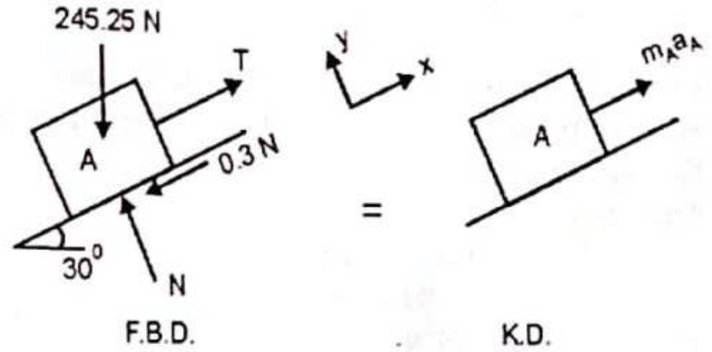

Kinetics of load B

Applying equations of Newton's Second Law to B

$\Sigma F_y = ma_y \uparrow \quad +$ ve

$2T - 588.6 = -\ m_B a_B$

$2T - 588.6 = -\ 60\ a_B$ .....(3)

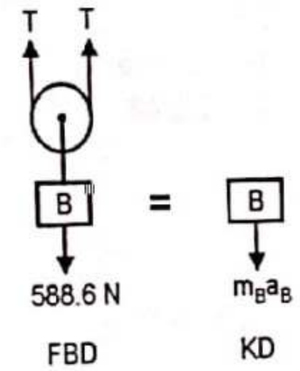

Solving equations (1), (2) and (3), we get

$a_A = 2.7\ m/s^2$ ..... **Ans.**

$a_B = 1.35\ m/s^2$ ..... **Ans.**

$T = 253.84$ N ..... **Ans.**

Ex. 10.6 Find acceleration of block A, B and C shown in figure when the system is released from rest. Mass of blocks A, B and C is 5 kg, 10 kg and 50 kg respectively. Coefficient of friction for blocks A and B is 0.3. Neglect weight of pulley and rope friction.

(MU Dec 07)

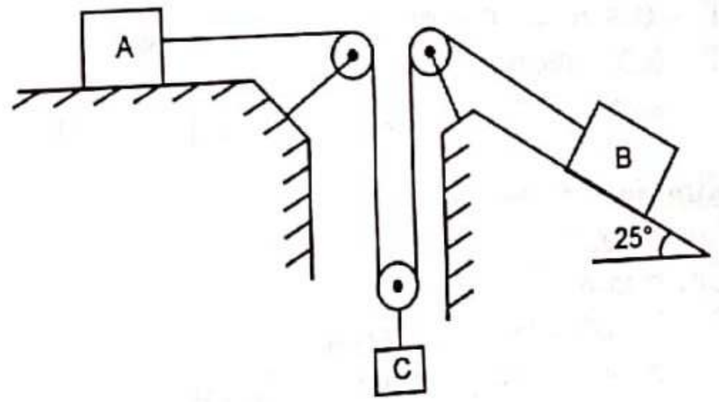

Solution: Blocks A, B and C are connected to each other by a string and perform dependent motion. We need to first find the relation between the acceleration of the three blocks using CSLM.

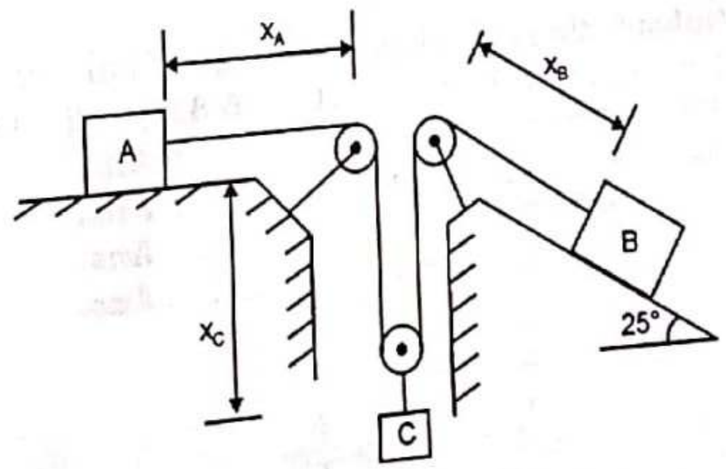

Let x_A, x_B and x_C be the variable positions of blocks A, B and C.

Applying CSLM

Total length of string

$$L = x_A + x_B + 2x_C \quad \pm \text{ constant ..... (1)}$$

If C moves down then A moves to the left and B moves up the slope, causing variable x_C to increase with time and variables x_A and x_B to decrease with time.

Therefore correcting the above equation (1) we get

$L = -x_A - x_B + 2x_C \quad \pm \text{ constants}$ ..... (2)

Differentiating equation (2) twice w.r.t. time, we get the acceleration relation as

$0 = -a_A - a_B + 2a_C$ ..... (3)

Let us now isolate the blocks A, B and C and perform kinetic analysis using NSL to each of them separately. Let T be the tension in the string.

<u>Kinetics of block A</u>

Applying NSL

$\Sigma F_y = m.a_y \uparrow +ve$

$N - 5 \times 9.81 = 0$

$\therefore \quad N = 49.05 \text{ N}$

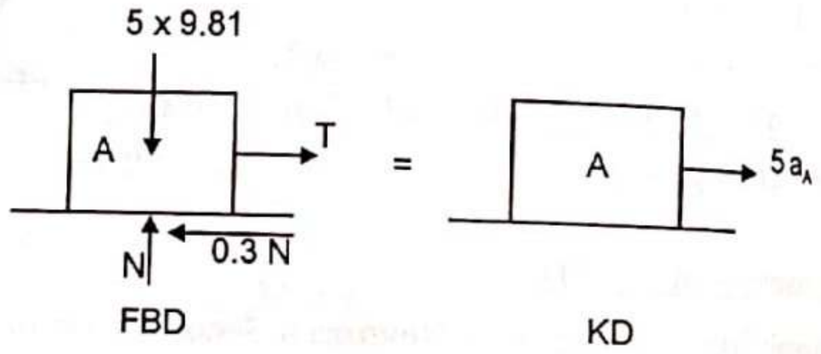

$\Sigma F_x = m.a_x \rightarrow +ve$

$T - 0.3 \text{ N} = 5 a_A$

$T - 0.3 (49.05) = 5 a_A$

$\therefore \quad a_A = 0.2 T - 2.943$ ..... (4)

<u>Kinetics of block B</u>

Applying NSL

$\Sigma F_y = m.a_y$

$N_1 - 10 \times 9.81 \cos 25 = 0$

$\therefore \quad N_1 = 88.91 \text{ N}$

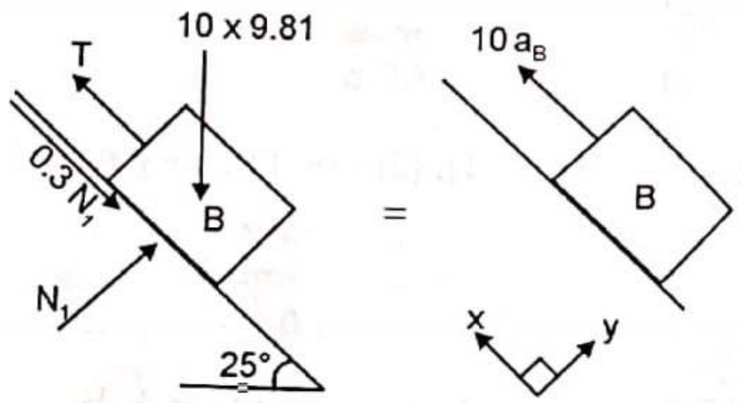

$\Sigma F_x = m.a_x$

$T - 0.3 N_1 - 10 \times 9.81 \sin 25 = 10 a_B$

$T - 0.3 \times 88.91 - 41.459 = 10 a_B$

$\therefore \quad a_B = 0.1 T - 6.813$ ..... (5)

<u>Kinetics of block C</u>

Applying NSL

$\Sigma F_y = m.a_y \uparrow +ve$

$T + T - 50 \times 9.81 = -50 a_C$

$\therefore \quad a_C = -0.04 T + 9.81$ ..... (6)

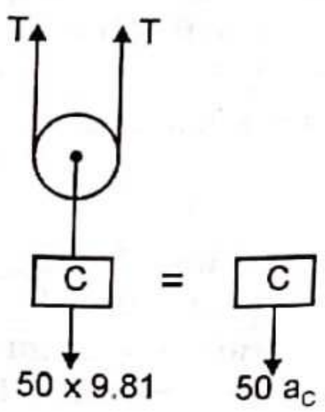

Substituting equations (4), (5) and (6) in equation (3)

$0 = -(0.2 T - 2.943) - (0.1 T - 6.813) + 2(-0.04 T + 9.81)$

$\therefore \quad T = 77.3 \text{ N}$ ..... **Ans.**

also $\quad a_A = 12.517 \text{ m/s}^2$ ..... **Ans.**

$a_B = 0.917 \text{ m/s}^2$ ..... **Ans.**

$a_C = 6.718 \text{ m/s}^2$ ..... **Ans.**

Ex. 10.7 Three blocks A, B and C masses 3 kg, 2 kg and 7 kg respectively are connected as shown. Determine the accelerations of A, B and C. Also find the tension in the strings.

(MU Dec 16)

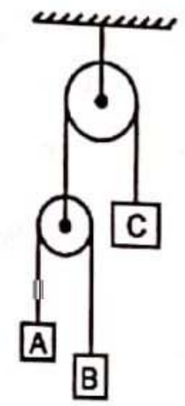

Solution: This is a dependant system of 3 blocks connected by two different strings. Let us call the pulley supporting blocks A and B as particle D.

To determine the relation between acceleration of these moving particles we need to apply constant string length method. Since the actual direction of motion is not known at this stage, let us assume all the particles A, B, C and D are moving in the downward direction.

Taking the reference as shown. Let x_A, x_B, x_C and x_D be the variable positions of particles A, B, C and D measured from the reference.

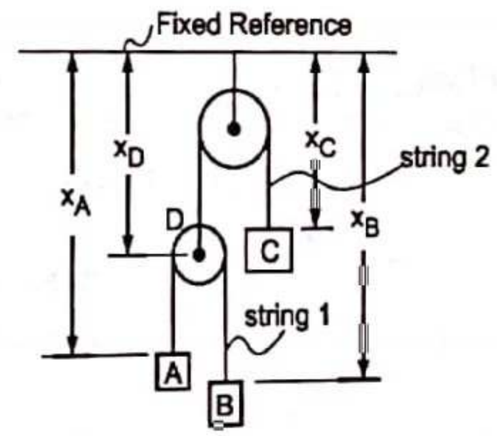

Applying CSLM to string 1, holding A and B

$(x_A - x_D) + (x_B - x_D) \pm \text{ constants} = L$

$\therefore \quad x_A + x_B - 2x_D \pm \text{ constants} = L$

Differentiating twice w.r.t time

$a_A + a_B - 2 a_D = 0$ ..... (1)

Now applying CSLM to string 2 holding C and D

$x_C + x_D \pm \text{ constants} = L$

Differentiating twice w.r.t time, we get

$a_C + a_D = 0$ ..... (2)

Combining equations (1) and (2), we get

$a_A + a_B + 2 a_C = 0$ ..... (3)

Let us now isolate the particles and perform kinetic analysis of each of then. Let T_1 and T_2 be tension in string 1 and string 2 respectively.

<u>Isolating Block A</u>

Applying N.S.L equations

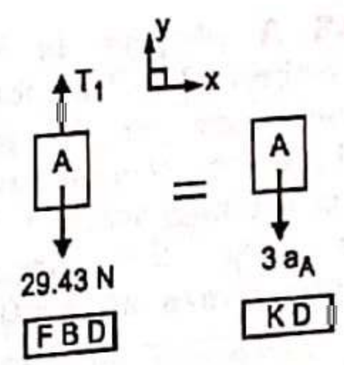

$\Sigma F_y = ma_y \uparrow +ve$

$\therefore \quad T_1 - 29.43 = -3 a_A$

$a_A = -0.333 T_1 + 9.81$ ..... (4)

Isolating Block B

Applying N.S.L equations

$\sum F_y = ma_y \uparrow$ + ve

$T_1 - 19.62 = -2\,a_B$

$\therefore \quad a_B = -0.5\,T_1 + 9.81$ ..... (5)

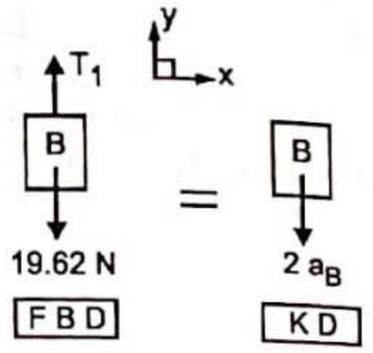

Isolating Block C

Applying N.S.L equations

$\sum F_y = ma_y \uparrow$ + ve

$T_2 - 68.67 = -7\,a_C$

$\therefore \quad a_C = -0.14286\,T_2 + 9.81$ ..... (6)

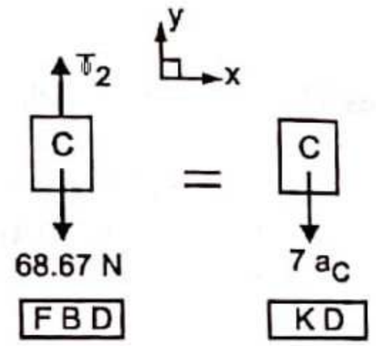

Isolating Pulley D

Applying N.S.L equations

$\sum F_y = ma_y \uparrow$ + ve

$T_2 - 2T_1 = -m \times a_D$

$\therefore \quad T_2 - 2T_1 = 0$ ... $\because$ mass of pulley is zero

or $\quad T_2 = 2T_1$ ..... (7)

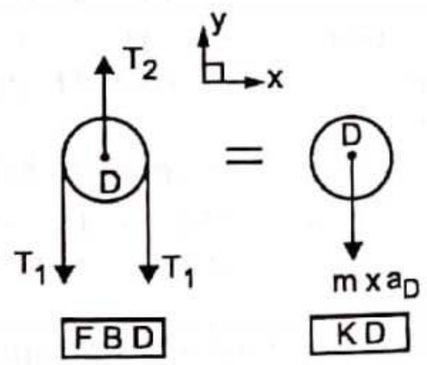

Combining equations (3), (4), (5), (6) and (7), we get

$$(-0.333\,T_1 + 9.81) + (-0.5\,T_1 + 9.81) + 2(-0.14286 \times 2T_1 + 9.81) = 0$$

$\therefore \quad T_1 = 27.934$ N also $T_2 = 55.867$ N ..... **Ans.**

Substituting value of T_1 in equations (4), (5) and (6), we get

$a_A = 0.5081$ m/s² or $a_A = 0.5081$ m/s² ↓ ..... **Ans.**

$a_B = -4.157$ m/s² or $a_B = 4.157$ m/s² ↑ ..... **Ans.**

$a_C = 1.829$ m/s² or $a_C = 1.8297$ m/s² ↓ ..... **Ans.**

Ex. 10.8 A package is being pulled up the incline by a force P which varies as per the graph shown. Find the acceleration and velocity of the package at t = 4 s knowing that the particle's velocity was 5 m/s at t = 0.

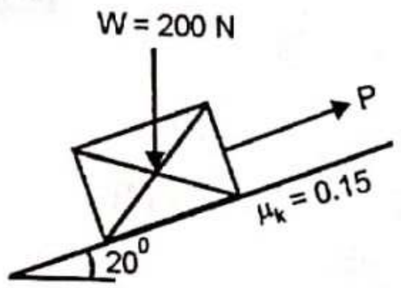

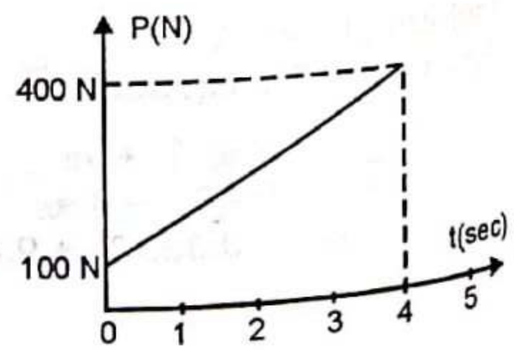

Solution: The graph indicates a linear variation of force P with time of the type $y = mx + c$. Here $m = \dfrac{400-100}{4} = 75$ and $c = 100$

$\therefore P = 75\,t + 100$ N

Applying equations of N S L

$\sum F_y = ma_y$

$N - 200 \cos 20 = 0$

$N = 187.94$ Newton.

$\sum F_x = ma_x$

$(100 + 75\,t) - 200 \sin 20 - 0.15\,N = m\,a$

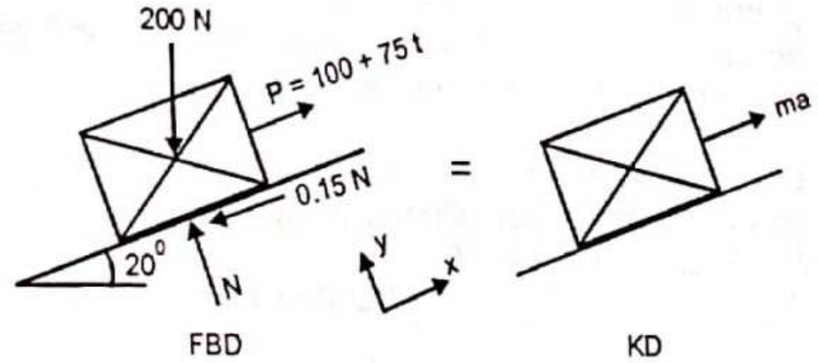

$\therefore \quad (100 + 75\,t) - 200 \sin 20 - 0.15\,(187.94) = 20.39\,a$

or $\quad a = 3.68\,t + 0.167$ m/s²

Kinematics

This is a case of rectilinear motion with variable acceleration.

Using $\quad a = \dfrac{dv}{dt}$ or $dv = a\,dt$

$\therefore \quad dv = (3.68\,t + 0.167)\,dt$

Integrating both sides, taking lower limits as v = 5 m/s and t = 0.

$$\int_5^v dv = \int_0^t 3.68\,t + 0.167\,dt \qquad \therefore \quad [v]_5^v = \left[3.68\frac{t^2}{2} + 0.167\,t\right]_0^t$$

$v - 5 = 1.84\,t^2 + 0.167\,t$

$\therefore \quad v = 1.84\,t^2 + 0.167\,t + 5$ m/s

at $\quad t = 4$ sec $\quad v = 35.1$ m/s ..... **Ans.**

Ex. 10.9 A block of mass 5 kg is released from rest along a 40° inclined plane. Determine the acceleration of the block using D' Alembert's principle. Take coefficient of friction as 0.2. ***(MU Dec 14)***

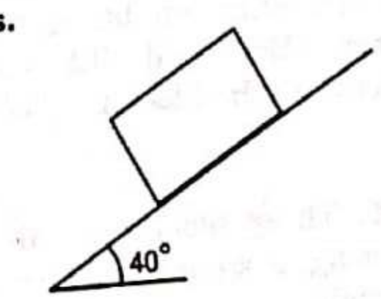

Solution: The FBD of the block in dynamic equilibrium is shown.

Applying D' Alembert's principle.

Using $\sum F_y = 0$

$N - 49.05 \cos 40 = 0$

$\therefore \quad N = 37.57$ N

Using $\sum F_x = 0$

$49.05 \sin 40 - 0.2 \times (37.57) - 5a = 0$

or $\quad a = 4.802$ m/s² ..... **Ans.**

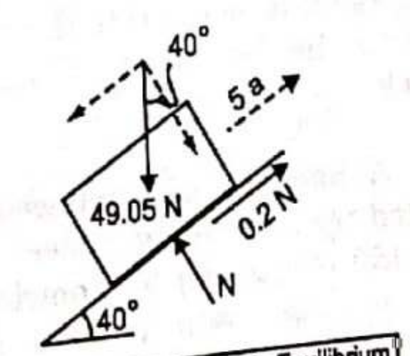

FBD - Block In Dynamic Equilibrium

Exercise 10.1

P1. A block of mass 30 kg is placed on a plane. μ_k between the block and plane is 0.3. If a force of 250 N is acting on the block, find its acceleration for the two cases shown.

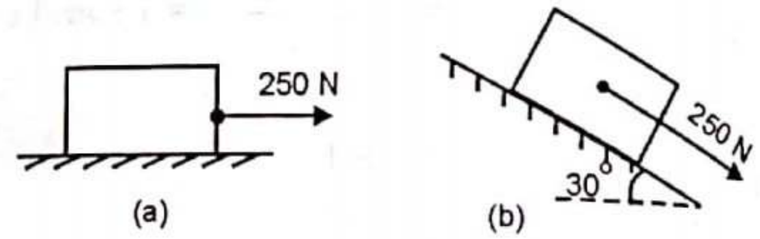

P2. Find force P required to accelerate the block shown in figure at 2.5 m/s². Take $\mu = 0.3$ ***(MU Dec 11)***

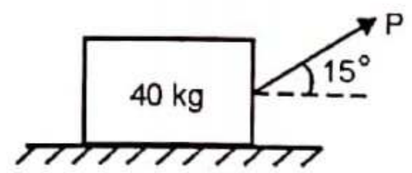

P3. Two blocks A and B are placed 15 m apart and are released simultaneously from rest. Calculate the time taken and the distance traveled by each block before they collide.

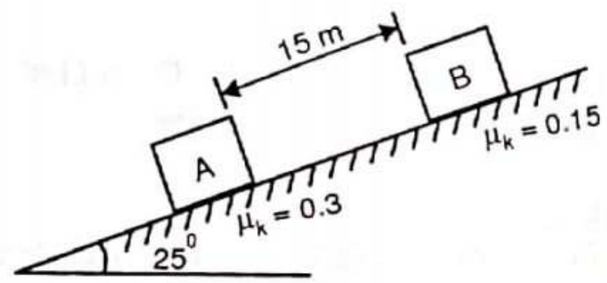

P4. Two blocks A of weight 500 N and B of weight 300 N are 10 m apart on an inclined plane as shown in figure. $\mu = 0.2$ for block A and 0.3 for block B. If the blocks begin to slide down simultaneously calculate the time and the distance travelled by each block when block A touches block B. ***(MU Dec 09)***

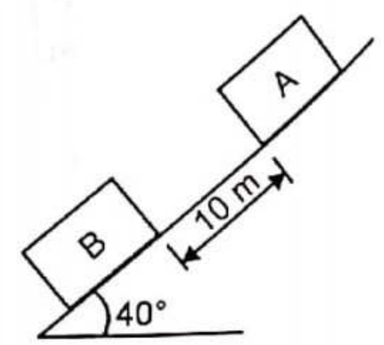

P5. Two blocks A and B rest on an inclined plane as shown. Find their acceleration on being released from rest. Also find the contact force between the blocks. ***(VJTI Apr 17)***

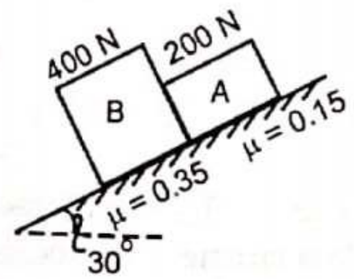

P6. Three blocks m_1 and m_2 and m_3 of masses 1.5 kg, 2 kg and 1 kg respectively are placed on a rough surface with $\mu = 0.20$ as shown. If a force F is applied to accelerate the blocks at 3 m/s² what will be the force that 1.5 kg block exerts on 2 kg block. ***(MU Dec 12)***

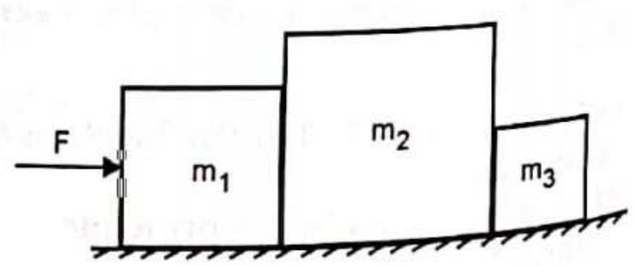

P7. A package of total weight 4000 N is being pulled up a slope by a steel cable exerting a force $F = (50\ t^2 + 2500)$ N. Knowing that the velocity of the package was 5 m/s at t = 0, find the acceleration and velocity of the package at t = 8 sec.

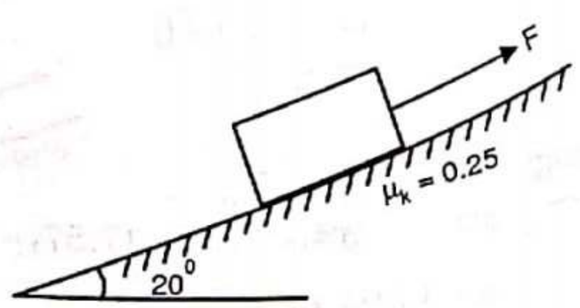

P8. A particle of mass 1 kg is acted upon by a force F which varies as shown in figure. If initial velocity of the particle is 10 m/s determine (i) what is the maximum velocity attained by the particle. (ii) Time when particle will be at the point of reversal. ***(MU Dec 13)***

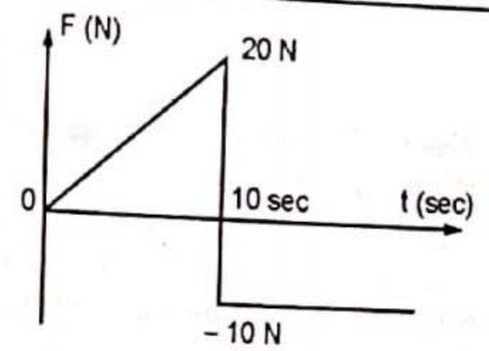

P9. A locomotive train weighing 5000 kN exerts a constant pull of 120 kN. The train starts from rest on a level track and attains a speed of 90 kmph, after which steam is suddenly shut off, slowly bringing it to a halt. If the tractive resistance is 15 N/kN of the weight of the train, find the total distance covered by the train and the total time to cover this distance. What is the maximum power developed by the engine?

P10. A vertical lift of total mass 750 kg acquires an upward velocity of 3 m/s over a distance of 4 m moving with constant acceleration starting from rest. Calculate the tension in the cable. ***(MU Dec 12)***

P11. a) A 400 kg lift carrying a 60 kg person travels vertically up starting from rest and acquires a velocity of 4 m/s in a distance of 3 m of motion. Find the tension in the cable supporting the lift and the force transmitted by the person on the lift floor. Does the person feel normal or heavy or light.

b) The lift is now brought to a halt from the speed of 4 m/s, in 2 sec time. What is the force exerted by the man on the floor of the lift and how does he feel now.

P12. Two blocks A and B are connected by a rope and move on a rough horizontal plane under a pull of 60 N as shown. If μ is 0.2 between the blocks and the surface, find the acceleration of the blocks and the tension in the rope. ***(VJTI Dec 11)***

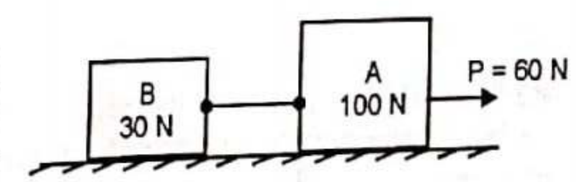

P13. Two masses 14kg and 7kg connected by a flexible inextensible cord rest on a plane inclined at 45° with the horizontal as shown in figure. When the masses are released what will be the tension T in the cord? Assume the coefficient of friction between the plane and the 14 kg mass as 0.25 and between the plane and the 7kg mass as 0.375 ***(VJTI May 08)***

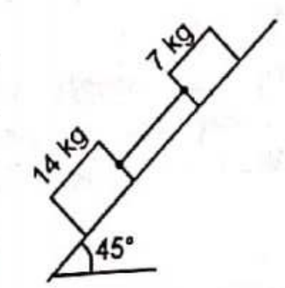

P14. Two particles of masses m_A = 5 kg and m_B = 10 kg are supported as shown. find the acceleration of the blocks

a) if the horizontal surface is smooth

b) if the horizontal surface is rough having coefficient of kinetic friction $\mu_k = 0.4$

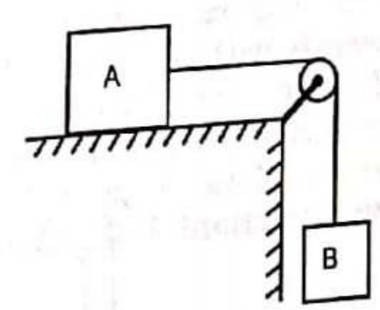

P15. Block A and B of mass 6 kg and 12 kg respectively are connected by a string passing over a smooth pulley. Neglect mass of pull. If coefficient of kinetic friction between the block A and the inclined surface is 0.2, determine acceleration of block A and block B. ***(MU Dec 15)***

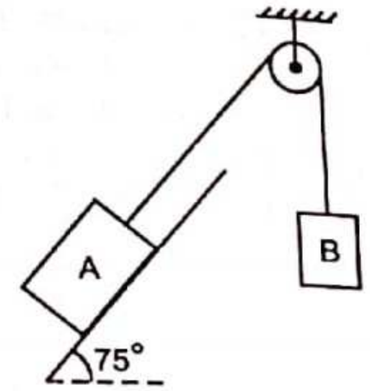

P16. Calculate the vertical acceleration of the 100 kg block and the tension in the connecting string. Neglect friction.

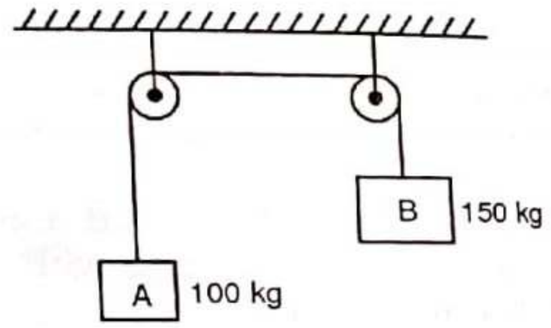

P17. Determine the tension in the string and the velocity of 1500N block shown in the figure 5 sec after starting from rest. ***(VJTI May 10)***

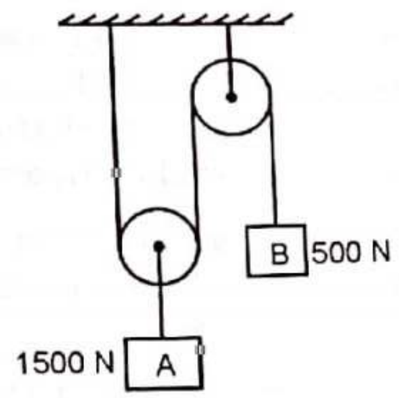

P18. a) Determine the weight W_A of block A required to bring the system to stop in 6 sec, if at the instant shown, the block C is moving down at 5 m/s. Given W_B = 200 N, W_C = 600 N. Take the pulley to be smooth.

b) Find weight W_A to bring the system to stop in 5 sec., If at the instant shown, v_C = 3 m/s ↓, W_B = 150 N and W_C = 500 N. ***(MU Dec 11)***

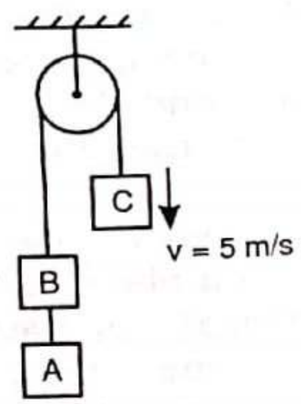

P19. At a given instant 50 N block A is moving downwards with a speed of 1.8 m/sec. determine its speed 2 sec. later. Block 'B' has a weight 20 N, and the coefficient of kinetic friction between it and the horizontal plane is μ_k = 0.2. Neglect the mass of pulleys and chord. Use D'Alembert's principle. ***(MU May 09)***

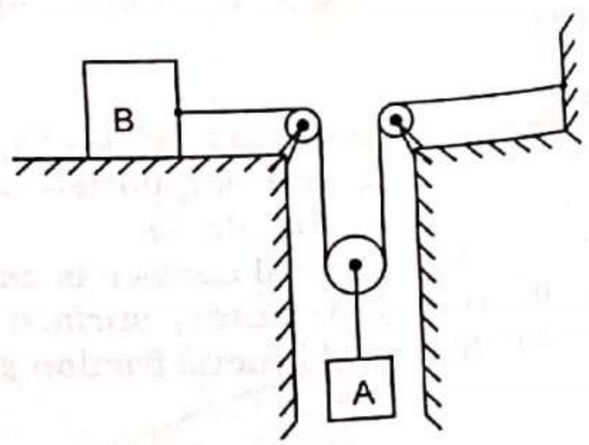

P20. If the system is released from rest find acceleration of blocks and tension in cable. ***(KJS Nov 15)***

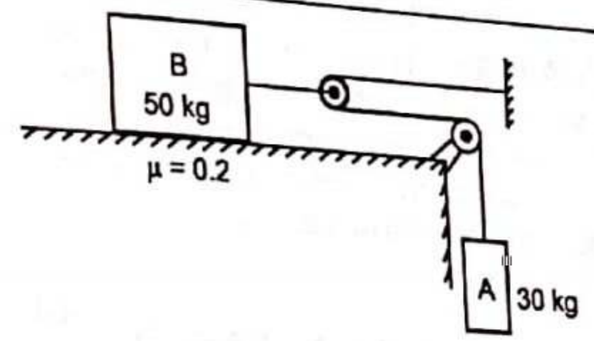

P21. Two blocks A and B are connected by an inextensible string as shown. Neglecting the effect of friction, determine the acceleration of each block and tension in the cable.

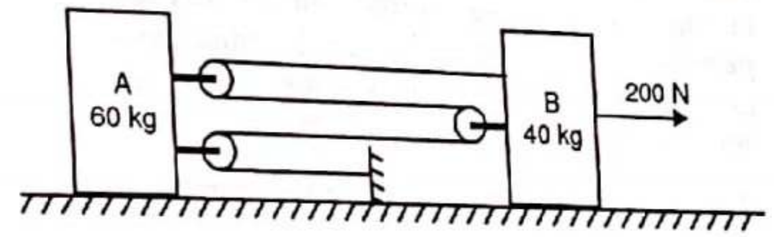

P22. Masses A (5 kg), B (10 kg), C (20 kg) are connected as shown in the figure by inextensible cord passing over massless and frictionless pulleys. The coefficient of friction for masses A and B with ground is 0.2. If the system is released from rest, find the acceleration of the blocks and tension in the cords. ***(MU Dec 10)***

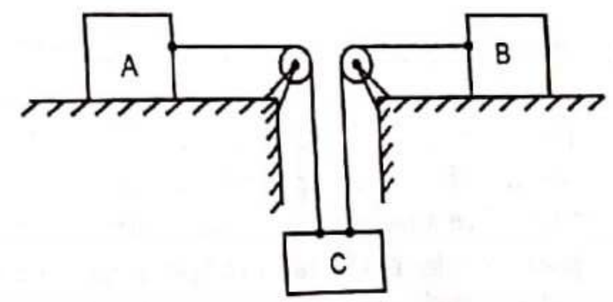

P23. The two blocks starts from rest. The horizontal plane and the pulley are frictionless. Determine the acceleration of each blocks and tension in the cord. ***(VJTI Nov 12)***

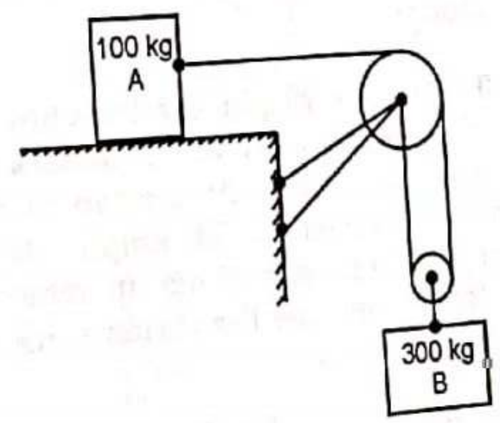

P24. Two blocks A and B are connected as shown. The string is inextensible. Mass A and B are 3 kg and 5 kg respectively. If coefficient of friction between A and inclined plane is 0.25, determine the tension in the string and accelerations of A and B. ***(MU Dec 14)***

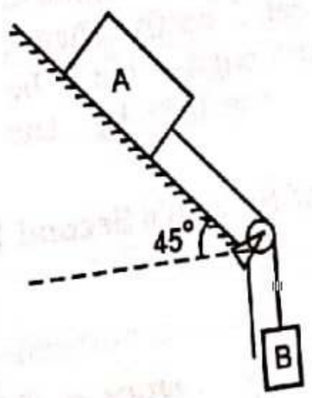

P25. Block A (7 kg), B (12 kg), C (30 kg) are connected by an inextensible string as shown. If the system is released from rest find the accelerations of each block and tension in the cord. Assume smooth surfaces.

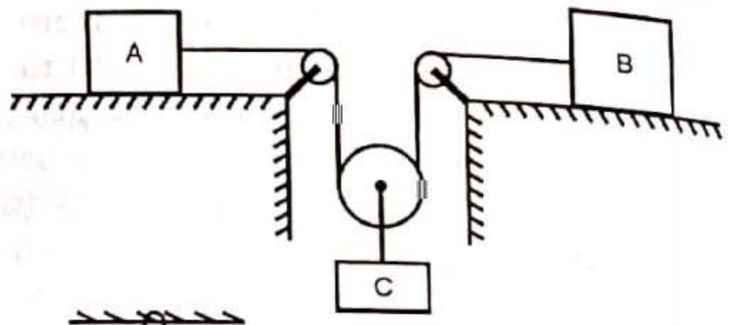

P26. System shows blocks A (2 kg), B (4 kg) and C (6 kg) supported by strings passing over smooth and massless pulleys D and E as shown in figure. If the system is released from rest. Find,

(1) tensions T_1 and T_2 in the two strings,

(2) acceleration of each of three blocks.

(NMIMS July 16, KJS May 17, Dec 17)

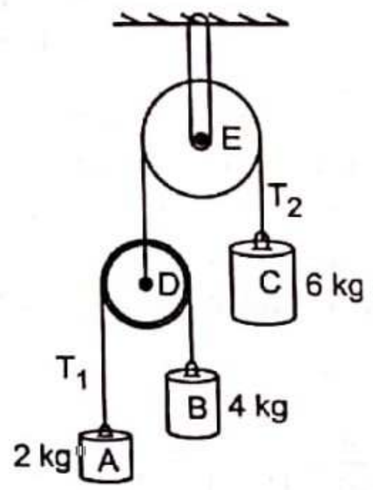

10.5 N S L Equations applied to Curvilinear Motion

For curvilinear moving particles, the kinetic diagram shows the components of ma vector viz, ma_n and ma_t. The ma_n component acts towards the centre of path while the ma_t component acts tangent to the path. Both the components lie in the plane of curvilinear motion.

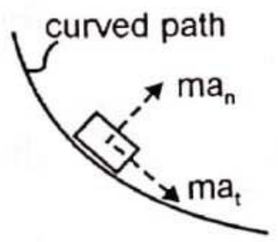

Kinetic Diagram (K D)

The following examples show the application of N S L equations to curvilinear motion.

Ex. 10.9 A 10 kN weight car traveling on a vertical curve AOC of parabolic shape increases its speed at a uniform rate of 2 m/s². At the top most point O on the curve its speed is 54 kmph. At this instant determine the reaction force it receives from the ground. Also determine the thrust force developed by the engine.

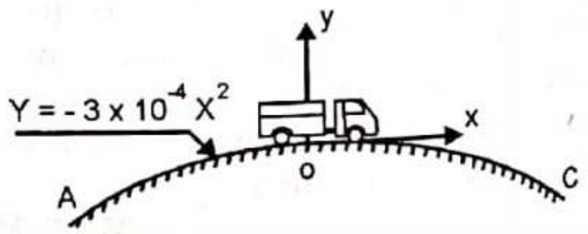

Solution: The car has a uniform curvilinear motion Let T be the thrust force developed by the engine. Let N be the reaction force exerted by the ground.

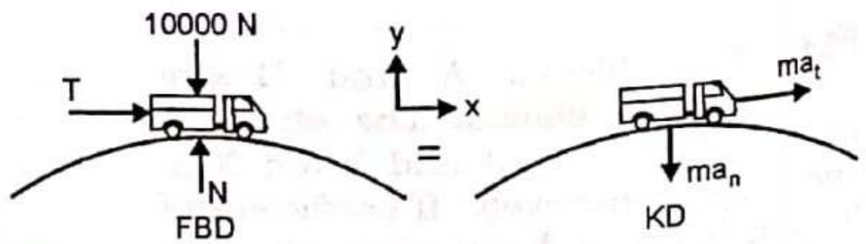

Applying equations of Newton's Second Law.

$\Sigma F_y = ma_y$

$N - 10000 = -m.a_n$

$$N - 10000 = \frac{-10000}{9.81} \times \frac{v^2}{\rho} \quad \text{...since } a_n = \frac{v^2}{\rho}$$

Let us find radius of curvature ρ at O (0, 0)

Equation of path $y = -3 \times 10^{-4} x^2$

$$\frac{dy}{dx} = -6 \times 10^{-4} x \qquad \text{also} \qquad \frac{d^2y}{dx^2} = -6 \times 10^{-4}$$

At O (0, 0), $\frac{dy}{dx} = 0$ and $\frac{d^2y}{dx^2} = -6 \times 10^{-4}$

$$\text{using } \rho = \frac{\left[1 + \left(\frac{dy}{dx}\right)^2\right]^{3/2}}{d^2y/dx^2} = \frac{[1+0]^{3/2}}{-6 \times 10^{-4}} = -1666.7 \text{ m} = 1666.7 \text{ m ...since } \rho \text{ can't be } -\text{ve}$$

Substituting $\rho = 1666.7$ m, we get, $N - 10000 = \frac{-10000}{9.81} \times \frac{(15)^2}{1666.7}$

$\therefore$ N = 9862.4 Newton ..... **Ans.**

using $\Sigma F_x = m\, a_x$

$T = m\, a_t = \frac{10000}{9.81} \times 2$ since $a_t = 2$ m/s² is given

$\therefore$ T = 2038.7 N ..... **Ans.**

Ex. 10.10 Determine the constant speed of the passengers in an amusement park ride if it is observed that the supporting cables are at $\theta = 30°$ from the vertical. Each chair including its passengers has a mass of 70 kg. Refer figure.

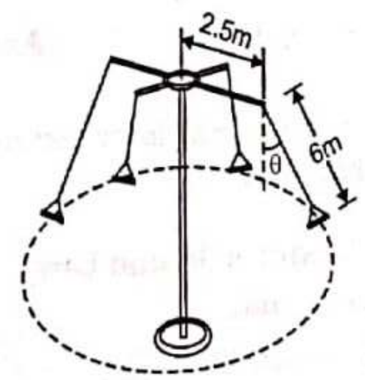

Solution: The passengers in the amusement ride perform curvilinear motion in a circular path.

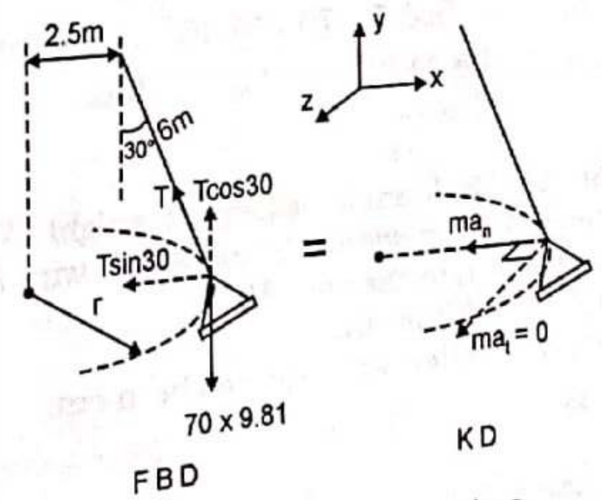

Applying Newton's Second Law

$\Sigma F_y = ma_y$

$\therefore$ $T\cos 30 - 70 \times 9.81 = 0$

$T = 792.9$ N

Acceleration a has two components a_n and a_t.

The component $a_t = 0$

Since the speed is constant.

$\Sigma F_x = ma_x$

$-T\sin 30 = -ma_n$

$729.9\sin 30 = 70 \times \frac{v^2}{5.5}$

$\therefore \quad v = 5.58 \text{ m/s}$ ..... **Ans.**

The component $a_n = \frac{v^2}{\rho}$

$\rho = \text{radius} = 2.5 + 6\sin 30$
$= 5.5 \text{ m}$

Ex. 10.11 Determine the maximum constant speed at which the pilot can travel around the vertical curve having a radius of curvature ρ = 900 m, so that he experiences a maximum acceleration a_n = 5 g = 49.05 m/s². If he has a mass of 70 kg, determine the normal force he exerts on the seat of the airplane when the plane is travelling at this speed and is at its lowest point. Refer figure.

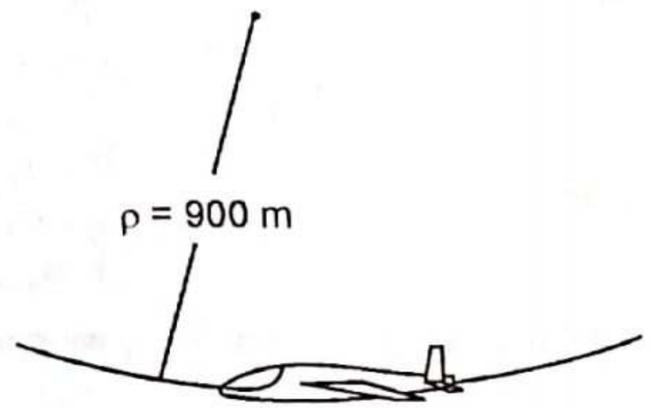

Solution: The airplane performs curvilinear motion.

Knowing normal component of acceleration $a_n = \frac{v^2}{\rho}$

We have, $49.05 = \frac{v^2}{900}$

$\therefore \quad v = 210.1 \text{ m/s}$ ..... **Ans.**

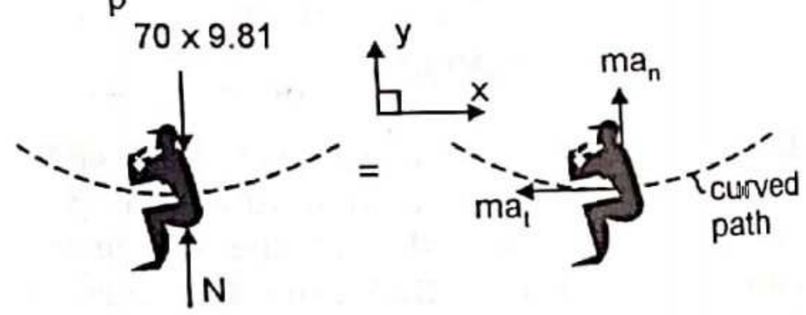

Let N be the normal force exerted by the pilot on this seat.

Applying Newton's Second Law

$\Sigma F_y = ma_y$

$N - 70 \times 9.81 = ma_n$

$N - 686.7 = 70 \times 49.05$ ..... given $a_n = 49.05 \text{ m/s}^2$

$\therefore \quad N = 4120.2 \text{ N}$ ..... **Ans.**

Ex. 10.12 A small sphere of weight W = 50 N is held as shown by the wires AB and AC. If wire AB is cut, determine the tension in the wire AC
(a) before AB is cut,
(b) immediately after AB has been cut.

(MU May 13)

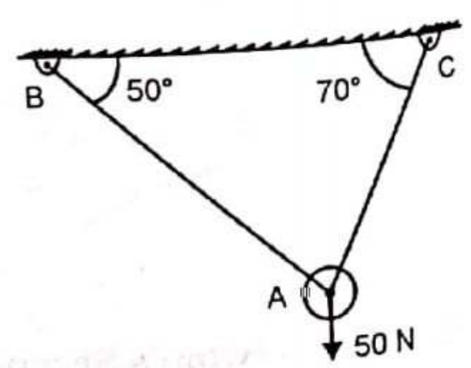

Solution: a) Before AB is cut, the system is in equilibrium, Applying Lami's theorem.

$\frac{T_{AB}}{\sin 160} = \frac{T_{AC}}{\sin 140} = \frac{50}{\sin 60} \quad \therefore \quad T_{AB} = 19.75 \text{ N}$

and $T_{AC} = 37.11 \text{ N}$ ..... **Ans.**

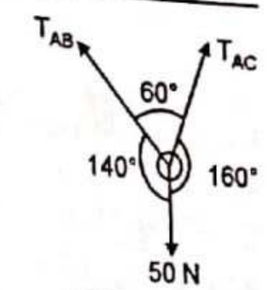

FBD of sphere in equilibrium

b) Just after AB is cut, the system loses its equilibrium state and becomes dynamic. The sphere now performs curvilinear motion.

Applying Newton's Second law
Using $\Sigma F_y = ma_y$

$T_{AC} - 50\sin 70 = ma_n$

$T_{AC} - 50\sin 70 = \frac{50}{9.81} \times 0$

$a_n = \frac{v^2}{\rho} = 0 \because v = 0$ at start of motion

$\therefore \quad T_{AC} = 46.98 \text{ N}$ ..... **Ans.**

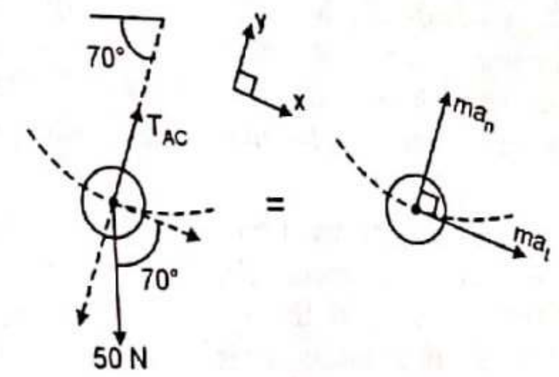

FBD KD

Ex. 10.13 A bob of 1.5 m pendulum describes an arc of circle in a vertical plane. If the tension in the cord is 3 times the weight of the bob for the position shown, find the velocity and acceleration of the bob in that position.

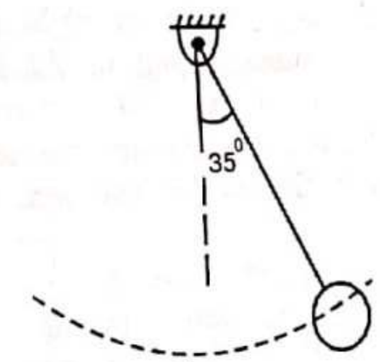

Solution: The bob is a particle performing curvilinear motion in a vertical plane.
Applying equations of Newton's Second Law

$\Sigma Fy = ma_y$

$T - mg\cos 35 = ma_n$

$3\,mg - mg\cos 35 = ma_n$

$(\because \; T = 3mg$ ..... given)

$\therefore \quad a_n = 21.39 \text{ m/s}^2$

$\Sigma Fx = ma_x$

$\therefore \quad mg\sin 35 = ma_t$

$a_t = 5.626 \text{ m/s}^2$

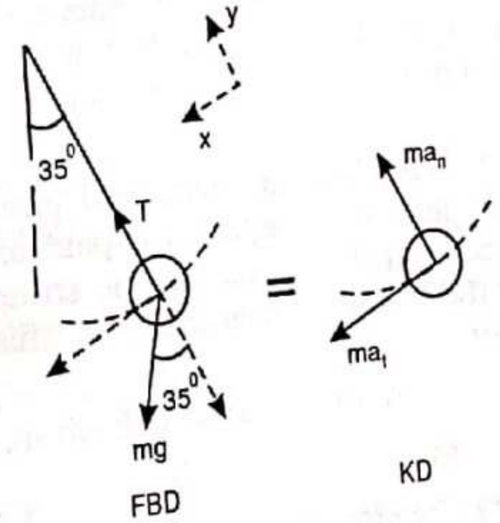

FBD KD

Total acceleration $a = \sqrt{a_n^2 + a_t^2} \quad \therefore \quad a = \sqrt{21.39^2 + 5.626^2} \quad \therefore a = 22.12 \text{ m/s}^2$ ...**Ans.**

Also $a_n = \frac{V^2}{\rho} \quad \therefore \quad 21.39 = \frac{V^2}{1.5} \quad \therefore \quad V = 5.66 \text{ m/s}$ ..... **Ans.**

Exercise 10.2

P1. A steel bob of mass 5 kg tied to a string of 3 m length is whirled with a constant speed, such that the bob moves in a circle in the horizontal plane. If the string makes an angle of 30° with the vertical, find the speed of the bob and tension in the string.

P2. A car weighing 12 kN goes round a flat curve of 90 m radius. Determine the uniform limiting speed of the car in order to avoid outward skidding. Take $\mu = 0.35$

P3. A small block rests on a turn table, 0.5 m away from its centre. The turn table, starting from rest, is rotated in such a way that the block undergoes a constant tangential acceleration of 0.5 m/s². Determine the angular velocity of the turn table at the instant when the block starts slipping. Take $\mu = 0.4$ ***(MU Dec 15)***

P4. Figure shows two vehicles moving at 90 kmph on a road. Knowing that $\mu = 0.5$ between road and the tyres. Determine total acceleration of each vehicle when the brakes are suddenly applied and the wheels skid.

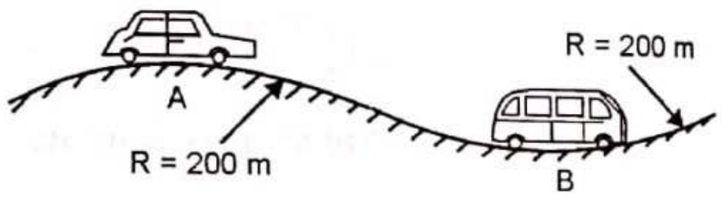

P5. A vehicle of weight 8000 N travels with a constant speed of 72 kmph over a vertical parabolic curve as shown. Find the pressure exerted by the tyres on the road at the peak B.

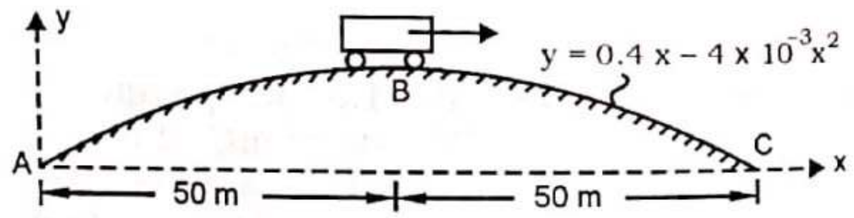

P6. In a roller coaster ride, the coaster traveling around the loop ABC needs to have a certain minimum velocity at the peak B. If the loop diameter is 10 m, find this velocity.

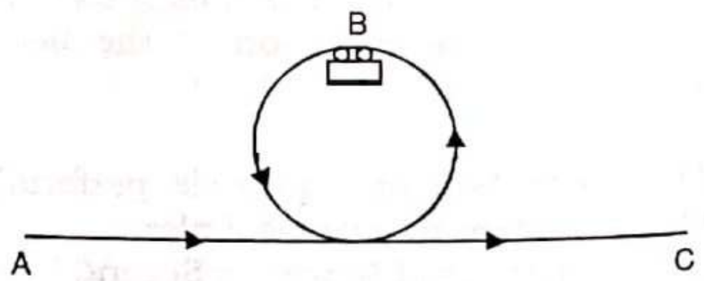

P7. A pendulum of mass 600 gms, has a speed of 3.6 m/s at the position shown. Find the tension in the string and the total acceleration at this instant.

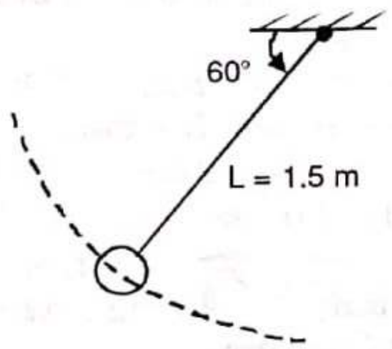

Exercise 10.3

Theory Questions

Q.1 State Newton's Second Law of Motion

Q.2 Derive the mathematical expression of Newton's Second Law.

Q.3 Explain D'Alembert's Principle. ***(VJTI May 09, 10, Nov 09, 10, Apr 11, Dec 11)***

★ ★ ★

Chapter 11
Kinetics of Particles: Work Energy Method

11.1 Introduction

In the first part of this chapter we shall use the Work Energy Principle method for analyzing kinetics of a moving particle or a system of particles. This is an alternate approach to Newton's Second Law. This method eliminates the determination of acceleration and thereby at times results in quicker solution.

In the second part of this chapter we will learn the Conservation of Energy method for solving certain special problems involving conservative forces.

11.2 Work of a Force

Work is a scalar quantity. *It is defined as the product of the force and the displacement in the direction of the force.* It is denoted by letter U. Units of work are N.m or Joule (J).

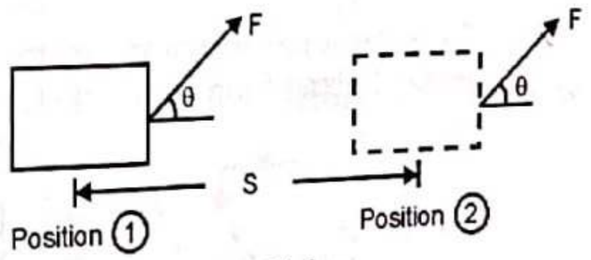

Fig.11.1

Consider a block acted upon by a constant force F acting at an angle θ as shown. Let this force cause the block to displace by s.

then, Work by force $\mathbf{U = F \cos\theta \times s}$ ..... **[11.1 (a)]**

A special case, when θ = 0 i.e force acts along the displacement, then

Work by force $\boxed{\mathbf{U = F \times s}}$ ..... **[11.1 (b)]**

Also when θ = 90° i.e. force is ⊥ to the displacement, then work by force = 0

11.3 Work of a Spring Force

Consider an undeformed spring of stiffness k as shown in Fig. 11.2 (a). Let the spring be deformed by some external agency, not shown in the figure, by an amount x_1, as shown in Fig. 11.2 (b).

Let this be position (1) of the spring. Now let the spring get further deformed such that its new deformation measured from the neutral position be x_2. This is position (2) of the spring. (Fig. 11.2 (c)).

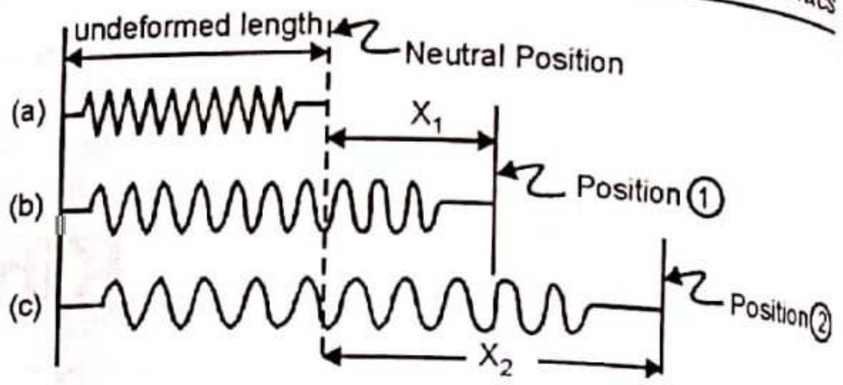

Fig.11.2

We know that the force in spring is variable as it is proportional to its deformation x and is directed towards the neutral position i.e. spring force

$$F = -kx$$

The work done by the spring between position (1) and position (2) is

$$U = \int_{x_1}^{x_2} -kx\,dx = -\frac{1}{2}k\,(x_2^2 - x_1^2)$$

or work by spring $\boxed{U = \frac{1}{2}k\,(x_1^2 - x_2^2)}$ ..... [11.2]

here, k is the spring constant to be taken in N/m, x_1 and x_2 are the deformations in the spring in position (1) and position (2) respectively and should be taken in metre to get the work in the units of N.m (Joule).

11.4 Work of a Weight Force

Consider a particle of mass m i.e. weight = mg move along a curved path in a vertical plane from position (1) to position (2).

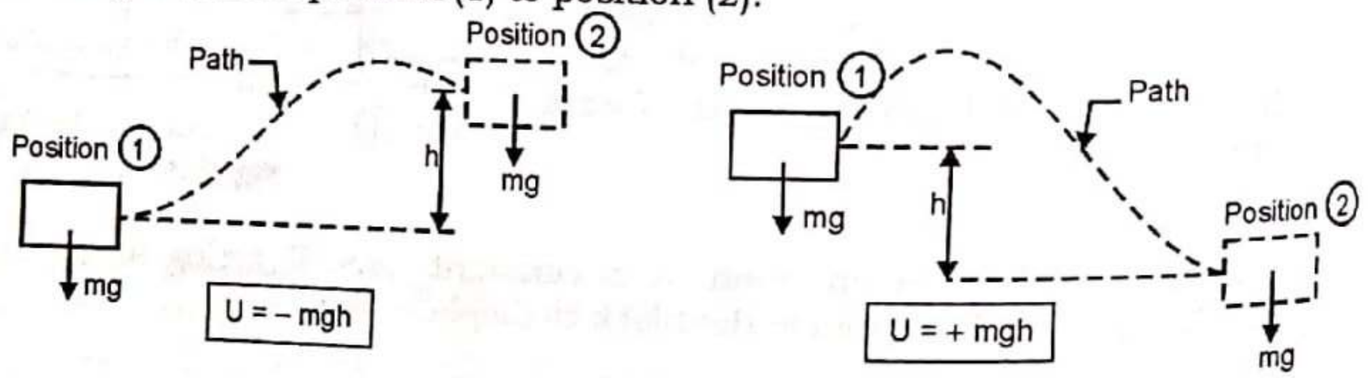

Fig.11.3

Let h be the vertical displacement between the two positions. Since the weight force which acts in the vertical direction has undergone a vertical displacement h, the work done by weight force,

$$\boxed{U = \pm\, mgh} \quad \text{..... [11.3]}$$

here $U = -mgh$ ..... If displacement is upwards

and $U = mgh$ ..... If displacement is downwards

In simple words if the final position of the particle is below the initial position, work by weight is positive. If the final position is above the initial position, work by weight is negative.

11.5 Work of a Friction Force

Consider a block of mass m slide down a distance s on an inclined rough plane. If μ_s and μ_k are the coefficient of static and kinetic friction, the block's motion would be resisted by the frictional force = $\mu_k N$.

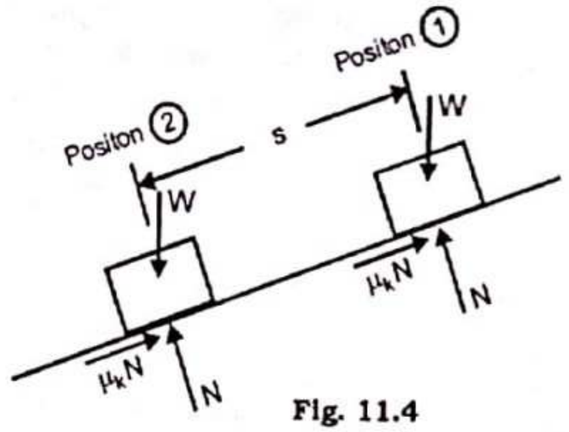

Fig. 11.4

The work of a friction force is

$$\therefore \quad \boxed{U = -\mu_k N \times s} \quad \text{..... [11.4]}$$

here, s though implies displacement, would be equal to the actual distance moved by the particle since frictional force always orients itself so as to oppose motion. Due to this, work by friction is always negative.

11.6 Kinetic Energy

It is defined as the energy possessed by the particle by virtue of its motion. If the particle is static i.e. not in motion it will not possess any kinetic energy. It is denoted by letter T.

If a particle of mass m has a velocity v at a given instant, its Kinetic Energy is

$$\boxed{T = \frac{1}{2}mv^2} \quad \text{..... [11.5]}$$

Kinetic Energy is a scalar quantity and its S.I. unit is Newton-metre (N.m) or Joule (J).

11.7 Work Energy Principle

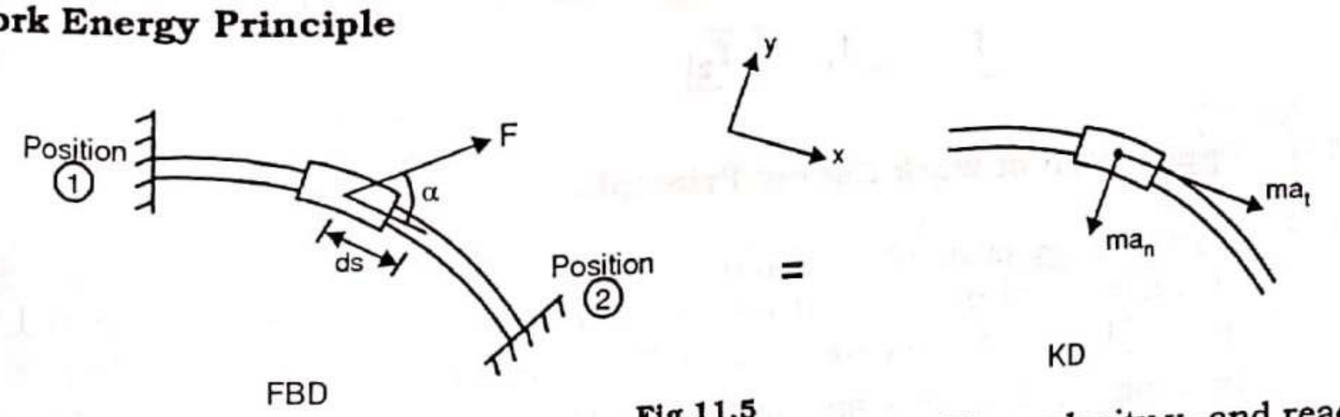

Fig.11.5

Consider a collar of mass m travel from position (1) with a velocity v_1 and reach position (2) with a new velocity v_2. The collar slides over a smooth curved guide kept in a horizontal plane, under the action of force F at angle α with the tangent to the path.

For an instant during its motion, applying equation of Newton's Second Law,

$$\Sigma F_x = m.a_x$$

we get $F\cos\alpha = m.a_t$

$\therefore \quad F\cos\alpha = m\dfrac{dv}{dt}$ since $at = \dfrac{dv}{dt}$

$\therefore \quad F\cos\alpha = m\dfrac{dv}{ds}\times\dfrac{ds}{dt}$ ..... Here ds is the small arc length traveled by the collar in dt time.

$\therefore \quad F\cos\alpha = mv\dfrac{dv}{ds}$ since $v = \dfrac{ds}{dt}$

or $\quad F\cos\alpha\, ds = m\, v\, dv$

Integrating between position (1) where $s = s_1$ and $v = v_1$ and position (2) where $s = s_2$ and $v = v_2$

$$\int_{s_1}^{s_2} F\cos\alpha\, ds = m\int_{v_1}^{v_2} v\, dv$$

Sine the L.H.S. represents the work done by a force

We get $\quad U_{1-2} = \dfrac{1}{2}mv_2^2 - \dfrac{1}{2}mv_1^2$

$\therefore \quad \dfrac{1}{2}mv_1^2 + U_{1-2} = \dfrac{1}{2}mv_2^2$

If $\quad \dfrac{1}{2}mv_1^2 = T_1$ and $\dfrac{1}{2}mv_2^2 = T_2$, we get

$$T_1 + U_{1-2} = T_2 \qquad \text{..... [11.6(a)]}$$

Equation 11.6 (a) relates the change in kinetic energy of the particle to the work done by the force on it. This relation can be extended to a system of forces acting on a particle and hence Work Energy Principle states ***"For a particle moving under the action of forces, the total work done by these forces is equal to the change in its kinetic energy."*** Equation 11.6 (a) is therefore expressed as

$$\boxed{T_1 + \sum U_{1-2} = T_2} \qquad \text{..... [11.6(b)]}$$

11.8 Application of Work Energy Principle

Work Energy principle is a simpler approach to the kinetics of a moving particle or a system of particles. It involves the use of the scalar equation 11.6 (b) viz., $T_1 + \sum U_{1-2} = T_2$, where T_1 and T_2 represent the particle's kinetic energy in position (1) and (2) respectively and U_{1-2} represents the work done by various forces acting on it. This concept does not involve the calculation of the particle's acceleration which is the case in Newton's Second Law method of solving kinetics. This principle is useful whenever the problem involves known or unknown parameters like forces, mass, velocity and displacement. Knowing the forces and the displacement of the particle, the particle's velocity in the new position can be found out, or in some cases knowing the particle's initial and final velocities and the active forces, the particle's displacement can be worked out.

If the system involves more than one particle, the principle can be applied to the system of particles also. In such cases, the total kinetic energy would be sum of the individual kinetic energies of different particles and the work done would be the summation of the work done by various forces on the individual particles.

11.9 Power and Efficiency

Consider a case of two persons in a race, set to climb the stairs and reach the top of a 10 storied building. Here both the persons would be doing an equal amount of work in reaching the top, but if one person reaches earlier than the other, he would be said to have exerted a greater power than the other one as he has completed the work in lesser time. Thus the rate at which the work is done is equally important.

Power is defined as the rate of doing work

i.e. $\quad \textbf{Power} = \dfrac{dU}{dt}$ ..... **[11.7 (a)]**

If the rate of doing work is constant, then

$$\textbf{Power} = \frac{\textbf{Work}}{\textbf{Time}} \qquad \text{..... [11.7 (b)]}$$

$\therefore \quad \text{Power} = \dfrac{F\times s}{t}$ ..... since work = $F\times s$

or $\quad \textbf{Power} = F\times v$ ..... since $v = \dfrac{s}{t}$, ... **[11.7 (c)]**

Power is a scalar quantity and its S.I unit is N.m/s or J/sec or Watt

$$1\ \text{N.m/s} = 1\ \text{J/s} = 1\ \text{W}$$

For any machine doing work, its efficiency is defined as

$$\eta = \frac{\text{Output work}}{\text{Input work}} \quad \text{or} \quad \eta = \frac{\text{Power output}}{\text{Power input}}$$

$$\%\ \eta = \frac{\textbf{Power output}}{\textbf{Power input}}\times 100 \qquad \text{..... [11.8]}$$

All machines have efficiency less than 1 or 100 % because of various energy losses. Major energy losses are the frictional losses. Man has always strived to increase the efficiency of machines it uses by reducing the various energy losses it undergoes during its working.

Ex. 11.1 A 20 kg crate is released from rest on the top of incline at A. It travels on the incline and finally comes to rest on the horizontal surface at C. Find the distance x it travels on the horizontal surface and also the maximum velocity it attains during the motion. Take $\mu_k = 0.3$.

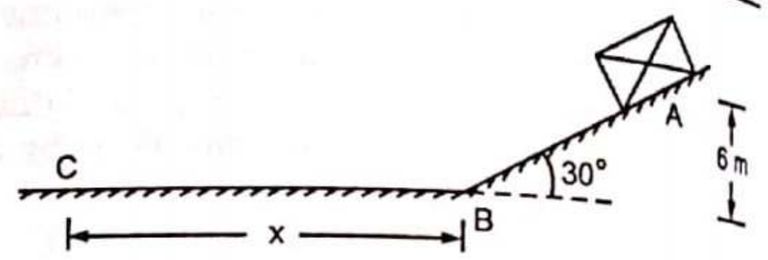

Solution: The crate acquires maximum velocity at the lower most point B on the incline. Applying Work Energy Principle from position (1) to (2).

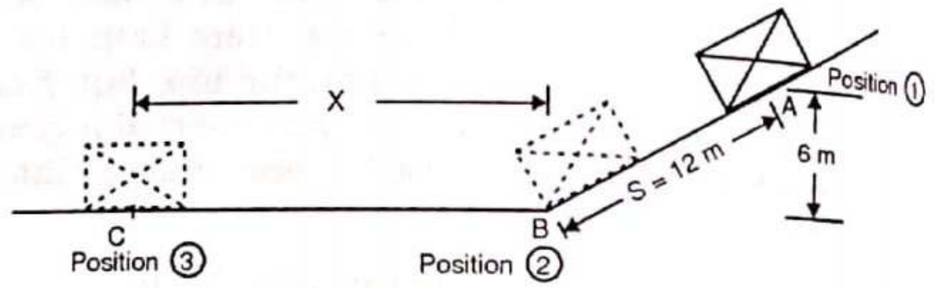

$T_1 = 0$ .....since block starts from rest.

$T_2 = ½ mv^2 = ½ \times 20 \times v^2 = 10 v^2$ J

U_{1-2} 1) Work by weight force

$U = m g h$

$= 20 \times 9.81 \times 6 = 1177.2$ J

2) Work by frictional force

$U = -\mu_k N.s$

$\therefore \quad U = -0.3 \times 169.9 \times 12$

$= -611.64$ J

here, for the inclined surface, normal reaction,

$N = W \cos 30 = 20 \times 9.81 \cos 30 = 169.9$ N

and distance traveled by block,

$s = \dfrac{6}{\sin 30} = 12$ m

Using $\quad T_1 + \sum U_{1-2} = T_2$

$0 + [\,1177.2 - 611.64\,] = 10 v^2$

$\therefore \quad v = 7.52$ m/s

i.e $\quad v_{max} = 7.52$ m/s at B ..... **Ans.**

To find the distance x traveled on the horizontal surface, we will apply work energy principle from position (2) to position (3)

$T_2 = ½ mv^2 = ½ \times 20 \times (7.52)^2 = 565.56$ J

$T_3 = 0$

U_{2-3} 1) only by frictional force

$= -u_k N.s$

$\therefore \quad U_{2-3} = -0.3 \times 196.2 \times x$

$= -58.86\, x$ J

For the horizontal surface,

$N = W = 20 \times 9.81 = 196.2$ N

Also the distance traveled by block,

s = x meters.

Using $\quad T_2 + \Sigma U_{2-3} = T_3$

$565.56 + [-58.86\, x] = 0$

$\therefore \quad x = 9.608$ m

..... **Ans.**

Ex. 11.2 A block is pushed with an initial velocity on a horizontal surface such that it travels 1500 mm before coming to rest. If $\mu_s = 0.25$ and $\mu_k = 0.2$ find the time of travel.

Solution: Applying Work Energy Principle from position (1) to position (2)

$T_1 = ½ mv^2 = 0.5 mv^2$ J

$T_2 = 0$

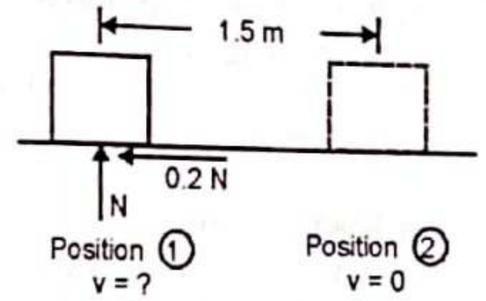

U_{1-2} by frictional force

$U = -\mu_k N.s$

$= -0.2\,(m \times 9.81) \times 1.5$

$= -2.943$ m J

using $\quad T_1 + \sum U_{1-2} = T_2$

$0.5 mv^2 - 2.943\, m = 0$

$\therefore \quad v = 2.426$ m/s ..... Initial velocity of block

Kinematics

Block performs rectilinear motion with uniform acceleration (since forces remain constant)

$u = 2.426$ m/s , $v = 0$, $s = 1.5$ m, $a = ?$, $t = t$ sec.

using $\quad v^2 = u^2 + 2as$

$0 = (2.426)^2 + 2\, a \times 1.5$

$\therefore \quad a = -1.962$ m/s²

using $\quad v = u + at$

$0 = 2.426 - 1.962\, t$

$\therefore \quad t = 1.236$ sec ..... **Ans.**

Ex. 11.3 A 30 N block is released from rest. It slides down a rough incline having $\mu = 0.25$. Determine the maximum compression of the spring.

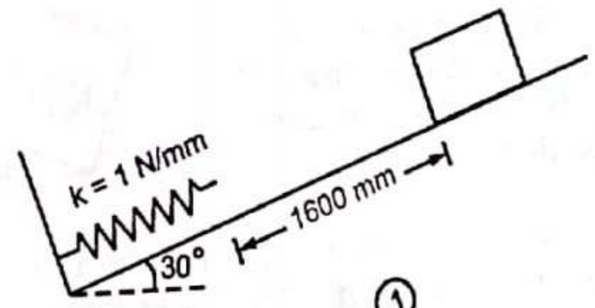

Solution: The block travels from rest at position (1), slides down the incline and after 1.6 m of travel down the incline hits the spring, compresses it by x metres and comes to a halt at position (2).

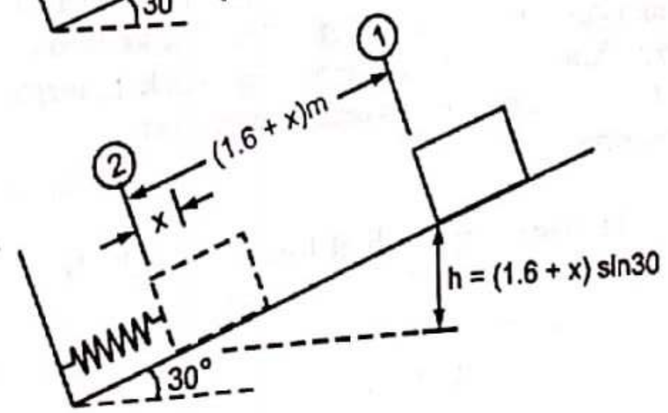

Applying Work energy Principle from position (1) to (2)

$T_1 = 0$ ..... since it starts from rest.

$T_2 = 0$ ..... since it comes to rest.

U_{1-2} 1) Work by weight force

$U = +mgh$ (+ ve since displacement is downward)

$= 30 \times (1.6 + x) \sin 30$

$= 24 + 15x$ J

$mg = 30$ N

2) Work by friction force

$U = -\mu_k.N.S$

$= -0.25 (30 \cos 30) (1.6 + x)$

$= -10.39 - 6.495x$ J

$N = mg.\cos 30$

$= 30 \cos 30$

$S = 1.6 + x$

3) Work by Spring force

$U = ½ K (x_1^2 - x_2^2)$

$= ½ \times 1000 (0 - x^2)$

$= -500 x^2$ J

$K = 1$ N/mm

$= 1000$ N/m

$x_1 = 0$

$x_2 = x$

Using $T_1 + \Sigma U_{1-2} = T_2$

$0 + (24 + 15x - 10.39 - 6.495x - 500x^2) = 0$

$\therefore$ $-500x^2 + 8.505x + 13.61 = 0$

$\therefore$ $x = 0.1737$ m

Hence the maximum compression of the spring is $x = 0.1737$ m ..... **Ans.**

Ex. 11.4 A 20 kg slider block moves with negligible friction up the inclined guide. The attached spring has a stiffness of 500 N/m and is compressed by 0.1 m in position A from where the slider block is released from rest. Find the velocity of the block at position B.

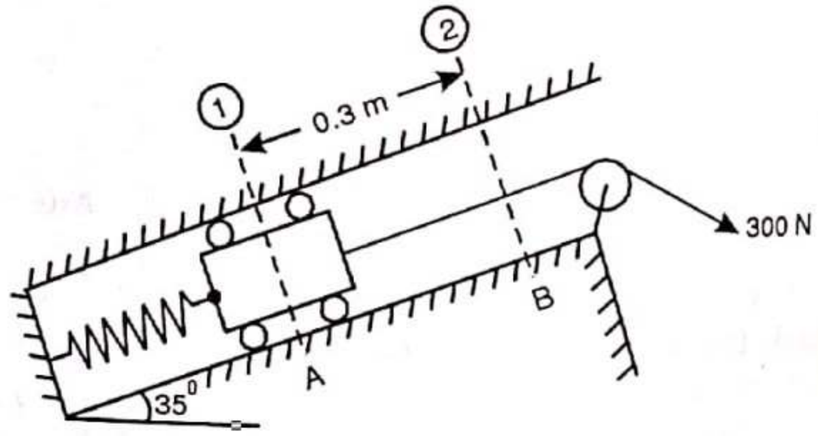

Solution: The block starts from position (1) at A with zero velocity and slides up to position (2) at B acquiring a certain velocity v.

To find this velocity v applying Work Energy Principle from position (1) to (2)

$T_1 = 0$ ..... since it starts from rest.

$T_2 = ½ mv^2$

U_{1-2} 1) Work by applied force F = 300 N

$U = F \times S$

$= 300 \times 0.3$

$= 90$ J

2) Work by Weight force

$U = -mgh$ (- ve since displacement is upward)

$= -20 \times 9.81 \times (0.3 \sin 35)$ here $h = 0.3 \sin 35$

$= -33.76$ J

3) Work by spring force

In position (1) the spring is compressed by 0.1 m

$\therefore$ Initial deformation $x_1 = 0.1$ m

In position (2) the spring is pulled by 0.3 m, causing it to elongate by 0.2 m after recovering its initial compression of 0.1 m

$\therefore$ Final deformation $x_2 = 0.2$ m

$U = ½ K (x_1^2 - x_2^2)$

$= ½ \times 500 (0.1^2 - 0.2^2)$

$= -7.5$ J

Work by friction is absent since the block slides up on a smooth incline.

Using $T_1 + \Sigma U_{1-2} = T_2$

$0 + (90 - 33.76 - 7.5) = 10 v^2$

$\therefore$ $v = 2.207$ m/s ..... **Ans.**

Ex. 11.5 Block B of weight 3000 N having a speed of 2 m/s in position (1) travels 10 m along and down the slope. Block A of weight 1000 N is connected to it by an inextensible string. Find the velocities of the blocks in the new position. Take $\mu_s = 0.35$ and $\mu_k = 0.3$ at the inclined surface.

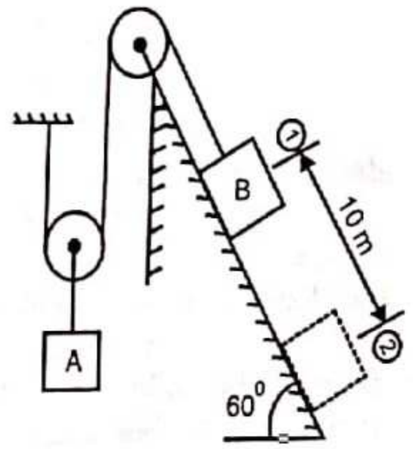

Solution: We shall first find the relation between the velocities and the distance traveled by the two connected blocks.

Using constant string length method (CSLM)

If x_A and x_B are the variable positions of A and B measured from a fixed reference point, we have the length L of string in terms of x_A and x_B as

$L = (-2 x_A) + x_B \pm$ constants

[x_A is – ve since with increase in x_B, x_A would decrease]

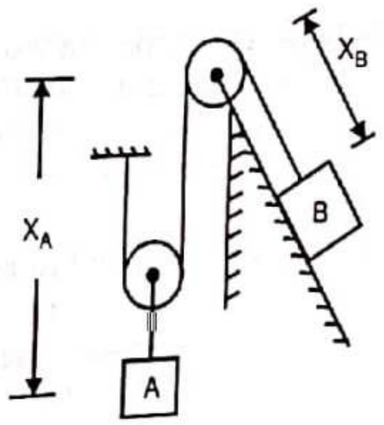

Differentiating w. r. to time

$0 = -2 v_A + v_B$

or $v_B = 2 v_A$ ...relation between the velocities

since the time interval is the same, we have

$x_B = 2 x_A$ .....relation between distance traveled

Applying Work Energy Principle to the system of A and B from position (1) to (2).

$T_1 = ½ m_A v_A^2 + ½ m_B v_B^2$

$= ½ (101.94) \times (0.5 v_B)^2 + ½ (305.81) v_B^2$

$= 165.65 v_B^2$

$= 165.65 (2)^2 = 662.6$ J

$T_2 = ½ m_A v_A^2 + ½ m_B v_B^2$

$= 165.65 v_B^2$ J

U_{1-2}

1) by weight of block B

$U = +mgh = 3000 \times 8.66$
$= 25981$ J
$= 25981$ J

(+ ve since displacement is downwards)
Block B moves vertically down by
$h = 10 \sin 60 = 8.66$ m

2) by weight of block A

$U = -mgh = -1000 \times 5$
$= -5000$ J

(– ve since displacement is upwards)
since $x_A = 0.5\, x_B$, displacement of block A
$= 0.5 \times 10 = 5$ m

3) by frictional force at the inclined surface

$U = -\mu k N \times s$
$U = -0.3 \times 1500 \times 10$
$= -4500$ J

block B travels a distance $s = 10$ m Normal reaction on the inclined surface $N = W \cos\theta$
$= 3000 \cos 60$
$= 1500$ Newton

Using $T_1 + \sum U_{1-2} = T_2$

$662.6 + [25981 - 5000 - 4500] = 165.65\, v_B^2$

$\therefore \quad v_B = 10.17$ m/s ..... **Ans.**

also $v_A = 0.5\, v_B$

$\therefore \quad v_A = 0.5 \times 10.17 = 5.086$ m/s ..... **Ans.**

Ex. 11.6 A 25 kg steel collar is being raised from rest at position (1) by a 400 N force applied as shown. The collar is guided by a smooth rod and a spring whose free length is 0.3 m. Find the speed of the collar as it reaches position (2).

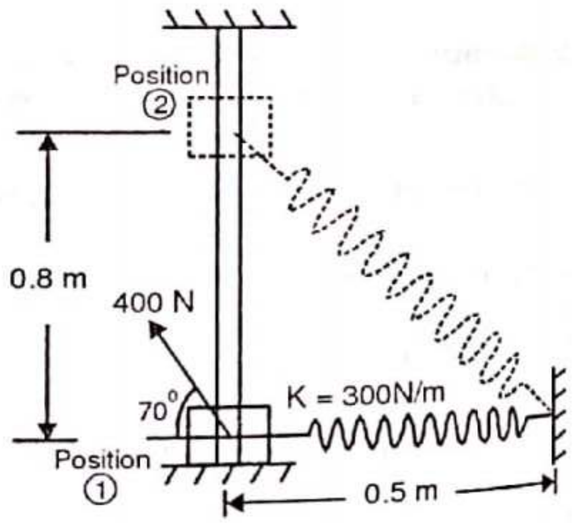

Solution: Applying Work Energy Principle to the moving collar from position (1) to (2).

$T_1 = 0$ ..... since it starts from rest.
$T_2 = ½\, mv^2 = ½\, 25 \times v^2 = 12.5\, v^2$ J

U_{1-2}

1) by applied force

$= F \times s$
$= 400 \times \sin 70 \times 0.8 = 300.7$ J
$= +300.7$ J (+ ve since force acts in the direction of displacement)

2) by spring force

$U = ½\, k\, (x_1^2 - x_2^2)$
$= ½ \times 300\, [(0.2)^2 - (0.643)^2]$
$= -56$ J

here, deformation of spring in position (1)
x_1 = spring length – free length
$= 0.5 - 0.3 = 02$ m

also deformation of spring in position (2)
x_2 = spring length – free length
$= \sqrt{0.5^2 + 0.8^2} - 0.3 = 0.643$ m

3) by weight force

$U = -mgh$
$= -25 \times 9.81 \times 0.8 = -19.62$ J

– ve because displacement is upwards

Using $T_1 + \sum U_{1-2} = T_2$

$0 + [300.7 - 56 - 196.2] = 12.5\, v^2$

$\therefore \quad v = 1.97$ m/s

$\therefore$ velocity of the collar in position (2) is $v = 1.97$ m/s ..... **Ans.**

Ex. 11.7 A collar of mass 1 kg is attached to a spring and slides without friction along a circular rod which lies in a horizontal plane. The spring is undeformed when the collar is at B. Knowing that the collar is passing through the point D with a speed of 1.8 m/s, determine the speed of the collar when it passes through point B and C. Take stiffness of spring K = 250 N/m. Radius of the circular path = 300 mm and distance OA = 125 mm.

(MU Dec 14)

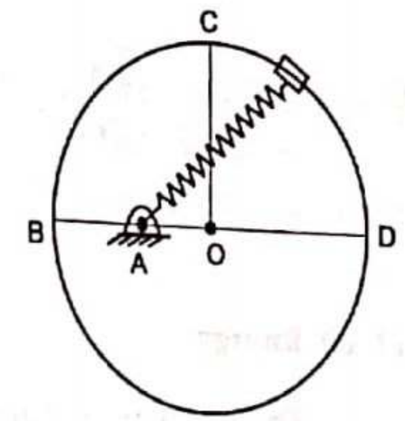

Solution: Let D, B and C be marked as position (1), (2) and (3) respectively.

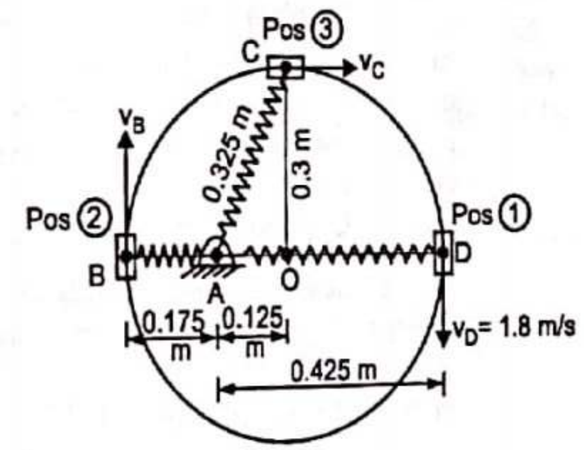

Applying W E P pos (1) to pos (2).

$T_1 = \frac{1}{2} mv^2 = \frac{1}{2} \times 1 \times 1.8^2 = 1.62$ J

$T_2 = \frac{1}{2} mv^2 = \frac{1}{2} \times 1 \times v_B^2 = 0.5\, v_B^2$ J

U_{1-2} 1) Work by spring force $= \frac{1}{2} k\left(x_1^2 - x_2^2\right)$

$= \frac{1}{2} \times 250 \times \left(0.25^2 - 0\right)$
$= 7.813$ J

Between pos (1) and pos (2), only spring force does work.
Free length of spring
$= 0.3 - 0.125$
$= 0.175$ m
$x_1 = 0.425 - 0.175$
$= 0.25$ m
$x_2 = 0$

Using $T_1 + \sum U_{1-2} = T_2$

$1.62 + [7.813] = 0.5\, v_B^2$

$\therefore \quad v_B = 4.343$ m/s ..... **Ans.**

Note that weight force does no work since the collar travels in a circular rod kept in a horizontal plane.

Applying W.E.P pos (2) to pos (3)

$T_2 = \frac{1}{2} mv^2 = \frac{1}{2} \times 1 \times 4.343^2 = 9.431$ J

$T_3 = \frac{1}{2} mv^2 = \frac{1}{2} \times 1 \times v_C^2 = 0.5\, v_C^2$ J

U_{2-3} 1) Work by spring force $= \frac{1}{2}k\left(x_1^2 - x_2^2\right)$

$$= \frac{1}{2} \times 250 \times \left(0 - 0.15^2\right)$$

$$= -2.813 \text{ J}$$

Between pos (2) and pos (3), only spring force does work.

$x_1 = 0$

$x_2 = 0.325 - 0.175$

$= 0.15$ m

Using $T_2 + \Sigma U_{2-3} = T_3$

$9.431 + [-2.813] = 0.5 v_C^2$

$\therefore$ $v_C = 3.638$ m/s ..... **Ans.**

11.10 Energy

The capacity of particle to do work is defined as the energy possessed by the particle. Energy exists in nature in various forms viz.,

i) Mechanical
ii) Electrical
iii) Heat
iv) Sound
v) Light
vi) Chemical etc.

Mechanical energy, which is the sum of the potential energy (V) and kinetic energy (T), is of interest in study of kinetics.

Potential Energy:

It is defined as the energy possessed by a particle by virtue of its position with respect to a datum, or by virtue of elastic forces acting on it. It is denoted by letter V. Potential energy is a scalar quantity and its S.I. Units are Newton-metre (N.m) or Joule (J).

Consider a particle of mass m moving on a vertical curved surface as shown. If the ground is chosen as the datum, the potential energy due to its position is given by

V = m g h ..... [11.9 (a)]

here, $V_1 = m\,g\,h_1$

$V_2 = m\,g\,h_2$

and $V_3 = m\,g\,h_3$

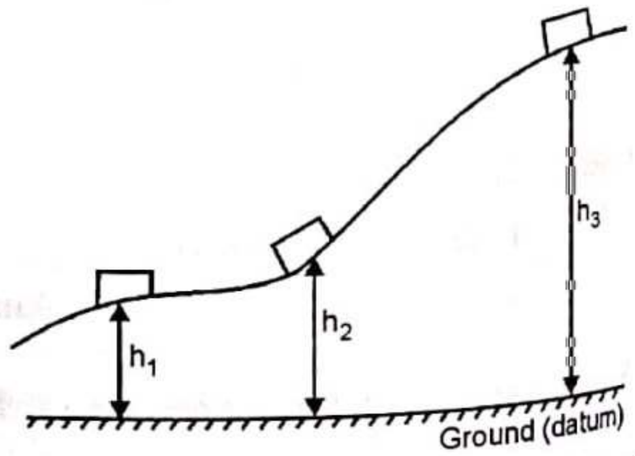

Fig.11.6

Consider the same block now acted upon by spring force. If x is the deformation of the spring from the neutral position, the potential energy due to elastic force is given by

V = ½ × k x² .....**[11.9 (b)]**

here, $V_1 = ½ \times k\,x_1^2$

and $V_2 = ½ \times k\,x_2^2$

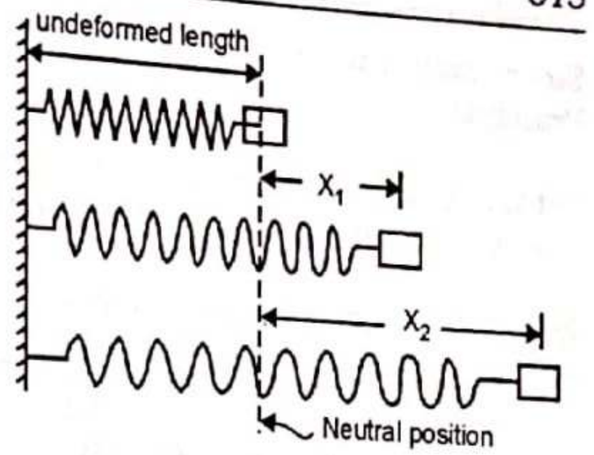

Fig.11.7

Kinetic Energy

This form of mechanical energy has been explained in the earlier part of this chapter in article 11.6.

11.11 Conservation of Energy

In mechanics we define *conservative forces* to be those forces who do work independent of the path followed by the particle on which they act. Work of a spring force, weight force come under the category of conservative forces. *Non-conservative forces* are those forces whose work depends on the path followed by the particle on which they act. Frictional force is a non-conservative force.

When a particle is acted upon by only conservative forces, the mechanical energy of the particle remains constants

i.e. **T + V = constant** ..... **11.10 (a)**

or **$T_1 + V_1 = T_2 + V_2$** ..... **11.10 (b)**

Equation 11.10 (b) is referred to as Conservation of Energy Equation and can be alternatively used to solve problems in kinetics involving conservative forces only.

Ex. 11.8 Determine the smallest amount by which the ball at A must be compressed against the spring so that when it is released from A, it reaches point B. Weight of ball is 2.5 N. Neglect friction on the curved surface.

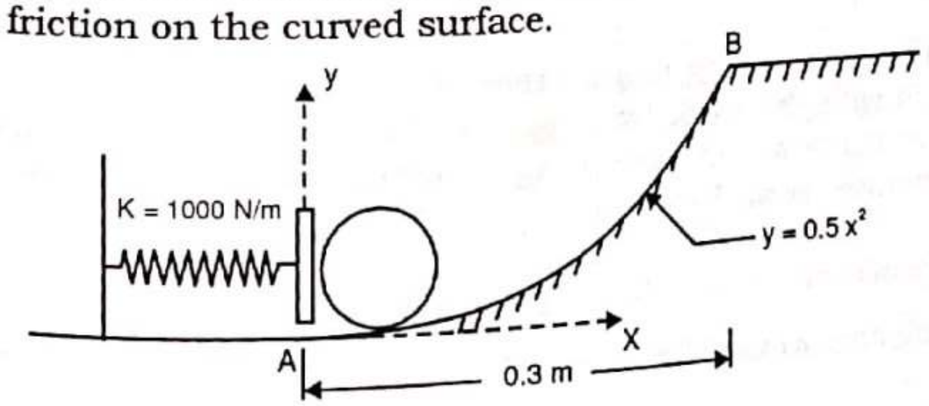

Solution: From the equation of the curve

$y = 0.5\,x^2$

at $x = 0.3$ m, $y = 0.5\,(0.3)^2 = 0.045$ m

Since only conservative forces are involved, we will use Conservation of Energy Principle.

Let the spring be compressed by x meters.
Taking the datum at A i.e. at position (1) for potential energy calculations.

Potential Energy [V] calculations

of the spring at position (1) $= \frac{1}{2} k x^2 = \frac{1}{2} \times 1000\, x^2$
$= 500\, x^2$ J
at position (2) = 0

of the ball at position (1) = 0
at position (2) $= m g h = 2.5 \times 0.045$
$= 0.1125$ J

Kinetic Energy [T] calculations

of the ball at position (1) = 0
at position (2) = 0

Using $T_1 + V_1 = T_2 + V_2$
$0 + 500\, x^2 = 0 + 0.1125$
$\therefore$ $x = 0.015$ m ..... **Ans.**

Ex. 11.9 A 10 kg collar slides freely on a vertical rod as shown. The collar is projected upwards with a velocity of 3 m/s. It hits the upper spring, compresses it and is then directed downwards. The collar now hits the lower spring. Find the maximum deformation of the lower spring.

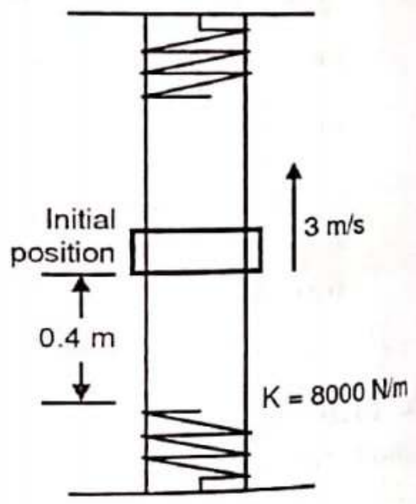

Solution: Since the problem only involves conservative forces, we shall use Conservation of Energy Equation.

In this problem the upper spring has no role to play since the work by weight of collar in going up cancels with the work by weight of the collar in coming down. The work in spring compression cancels with the spring decompression. Hence the collar now has a speed of 3 m/s downwards at the given position.

Taking the initial position of the collar as datum.

Let the lower spring compress by x meters.

Kinetic Energy [T] calculations:

of the collar at position (1) $= \frac{1}{2} m v^2 = \frac{1}{2} \times 10 \times 3^2 = 45$ J
at position (2) = 0

Potential Energy [V] calculations

of the collar in position (1) = 0
in position (2) $= m g h$
$= 10 \times 9.81 \times (-0.4 - x)$
$= -39.24 - 98.1\, x$ J

of the spring in position (1) = 0
in position (2) $= \frac{1}{2} k x^2$
$= \frac{1}{2} \times 8000\, x^2$
$= 4000\, x^2$ J

Using $T_1 + V_1 = T_2 + V_2$
$45 + 0 = 0 + [(-39.24 - 98.1\, x) + 4000\, x^2]$
$4000\, x^2 - 98.1\, x - 84.24 = 0$
or $x = 0.1579$ m ..... **Ans.**

Exercise 11.1

P1. A bullet of mass 30 gm moving with a velocity of 226 m/s strikes a wooden log and penetrates through a distance of 185 mm. Calculate the average retarding force offered by the log in stopping the bullet.

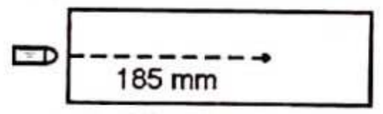

P2. A force of 500 N is acting on a block of 50 kg mass resting on a horizontal surface as shown in figure. Determine the velocity after the block has travelled a distance of 10 m. Coefficient of kinetic friction = 0.5.
(MU Dec 17)

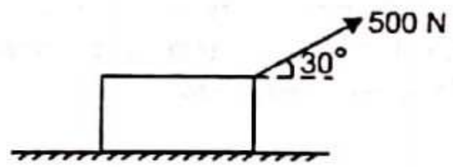

P3. A motorist travelling at a speed of 90 kmph suddenly applies the brakes and comes to rest after skidding 100 m. Determine the time required for the car to stop and coefficient of kinetic friction between the tiers and the road. ***(MU May 14)***

P4. A block of mass 60 kg at A is being pushed up a inclined plane (μ = 0.2) by applying a constant force P = 500 N. knowing that the speed of the block at A is 3 m/s, determine i) the speed of the block at B (ii) if the force P is now reduced and P = 300 N acts during its motion from B to C, find the distance x travelled by the block as it comes to a halt at C.

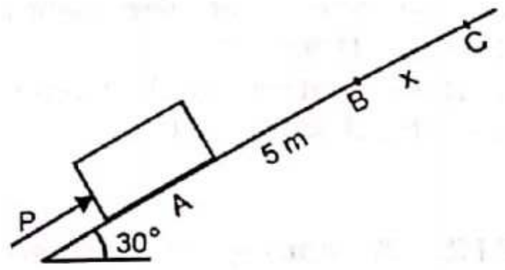

P5. Two masses 8 kg and 3 kg are initially held at rest in the position shown. Determine the speed of the 8 kg block as it hits the ground. Neglect friction at the pulley.

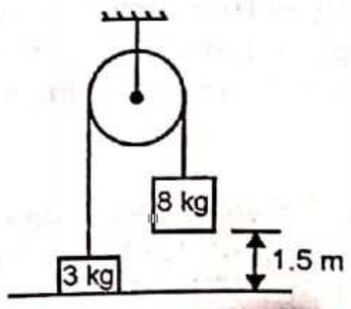

P6. From the top of a building 20 m high, a ball is projected at 15 m/s at an angle of 30° upwards to the horizontal. Find the magnitude of the velocity of the ball as it hits the ground. Use Work Energy Principle.

P7. At a certain instant a body of mass 15 kg is falling vertically down at a speed of 25 m/s. What upward vertical force will stop the body in 2 seconds? ***(M.U May 08)***

P8. A stone weighing 15 N dropped from a height of 25 m buries itself 300 mm deep in the sand. Find the average resistance to penetration and the time of penetration. ***(VJTI Apr 17)***

P9. Find the velocity of block A and B when A has traveled 1.2 m up the inclined plane starting from rest. Mass of A is 10 kg and that of B is 50 kg. Coefficient of friction between block A and inclined plane is 0.25. Pulleys are massless and frictionless. Use Work energy principle. ***(MU Dec 07)***

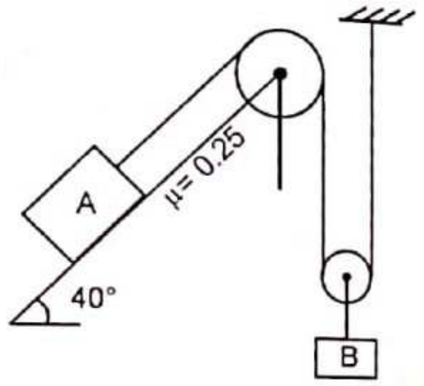

P10. The 3 kg smooth collar is attached to a spring of spring constant, k = 6 N/m that has an unstretched length 2.8 m. Determine its speed at A, when it is drawn to point B and released from rest.

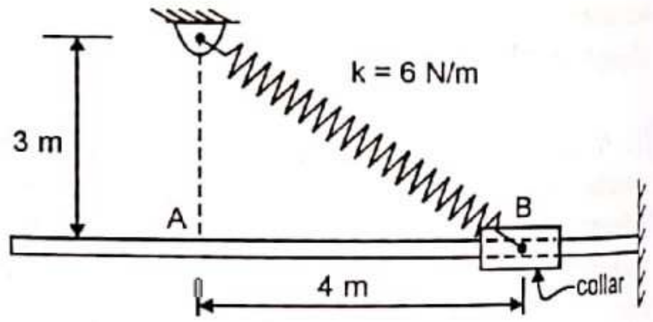

P11. A 5 kg steel collar is attached to a spring of k = 800 N/m and a free length of 0.7 m. If the collar is released from rest at A, determine

a) the speed of the collar as it passes through B and C.

b) If the collar finally comes to a halt at D find the distance CD.

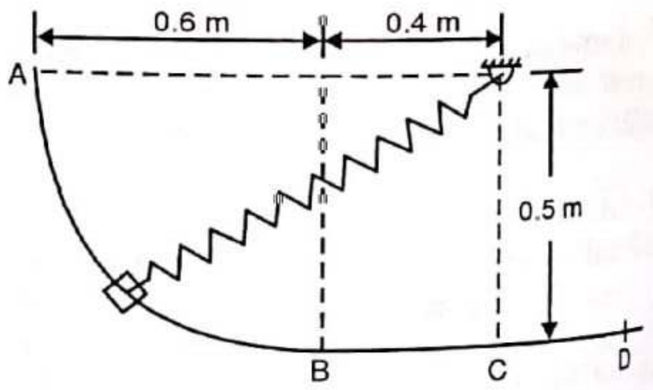

P12. A spring of stiffness k is placed horizontally and a ball of mass m strikes the spring with a velocity v. find the maximum compression of the spring. Take m = 5 kg, k = 500 N/m, v = 3 m/s. ***(MU Dec 12)***

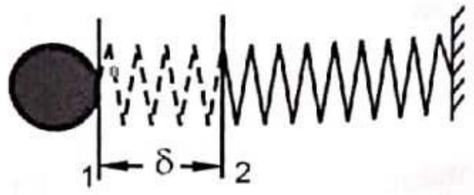

P13. A 5 kg mass drops 2m upon a spring whose modulus is 10 N/mm. a) What will be the speed of the block when the spring is deformed 100 mm? ***(MU Dec 10)***
b) What will be the maximum compression of the spring.

P14. A small block of mass 5 kg is released at A from rest on a frictionless circular surface AB. The block then travels on the rough horizontal surface BC whose μ_s = 0.3 and μ_k = 0.2. A spring having stiffness k = 900 N/m is placed at C to bring the block to a halt. Find the maximum velocity attained by the block and also the maximum compression undergone by the spring.

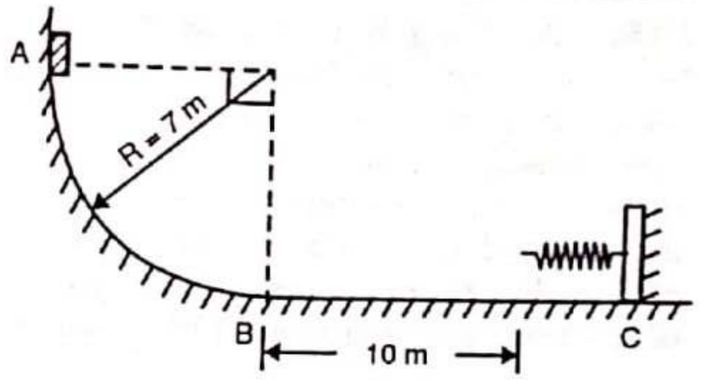

P15. A cylinder has a mass of 20 kg and is released from rest when h = 0 as shown in the figure. Determine its speed when h = 3 m. The springs each have an unstretched length of 2 m. Take k = 40 N/m. ***(MU Dec 16)***

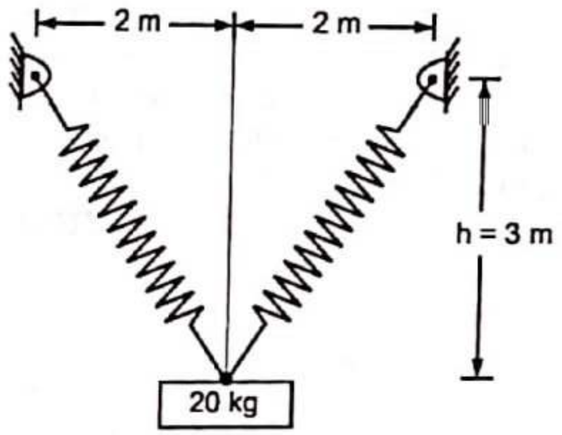

P16. A block of mass m = 80 kg is compressed against a spring as shown in figure. How far from point B (distance x) will the block strike on the plane at point A. Take free length of spring as 0.9 m, μ_k = 0.2 and spring stiffness as K = 40 × 10^2 N/m. ***(MU May 08)***

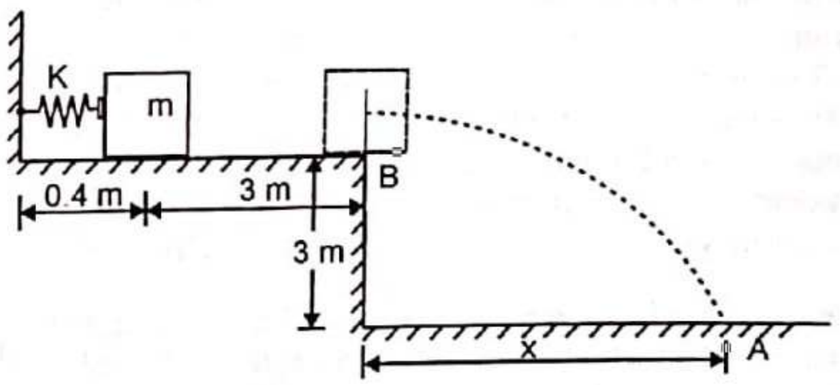

P17. Marbles having a mass of 5 gm fall from rest at A through the glass tube and accumulate in the can at 'C'. Determine the placement 'R' of the can from the end of the tube and the speed at which the marbles fall into the can. Neglect the size of the can. ***(M. U. May 09)***

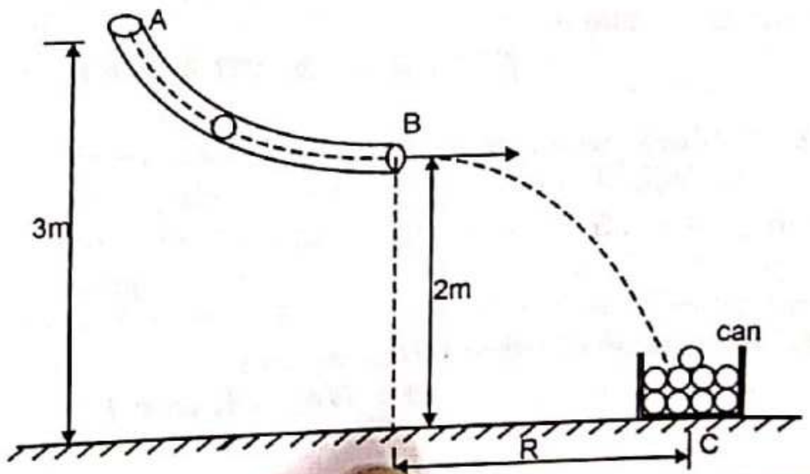

P18. A spring is compressed by 0.3 m and held by a latch mechanism. When the latch is released it propels a package of 500 N weight from position A to position B on the conveyor. If μ_k = 0.2 between the package and the incline and the desired speed of the package at B is 4 m/s, determine the stiffness value k of the spring which should be provided.

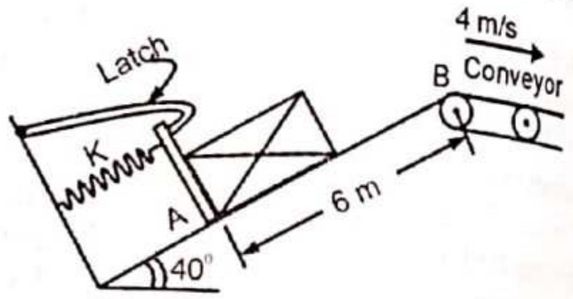

P19. A collar of mass 10 kg moves in a vertical guide as shown. Neglecting friction between guide and the collar, find its velocity when it passes through position (2), after starting from rest in position (1). The spring constant is 200 N/m and the free length of the spring is 200 mm.

(MU Dec 08)

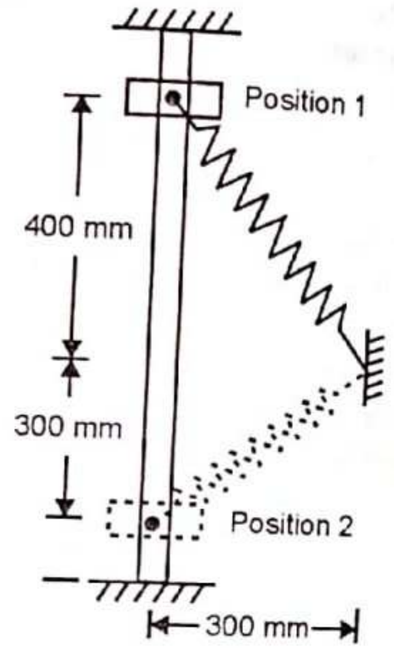

P20. A 2 kg collar M is attached to a spring and slides without friction in a vertical plane along the curved rod ABC as shown in figure. The spring has an un-deformed length of 100 mm and its stiffness k = 800 N/m. If the collar is released from rest at A, determine its velocity i) as it passes through B ii) as it reaches C.

(MU Dec 15)

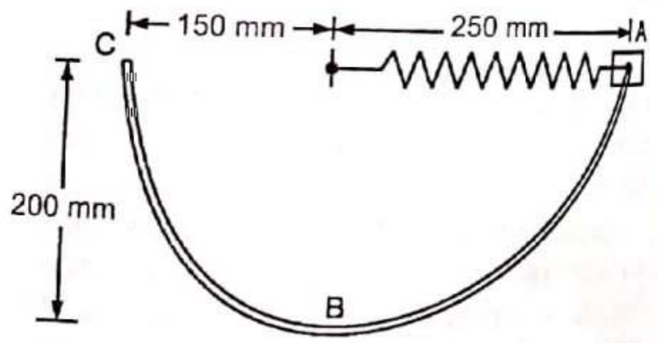

P21. Two blocks m_A = 10 kg and m_B = 5 kg are connected as shown. Determine the velocity of each block when system starts from rest and the block B gets displaced by 2 m. Take μ = 0.2 between block A and the horizontal surface.

(VJTI Dec 13, MU Dec 13)

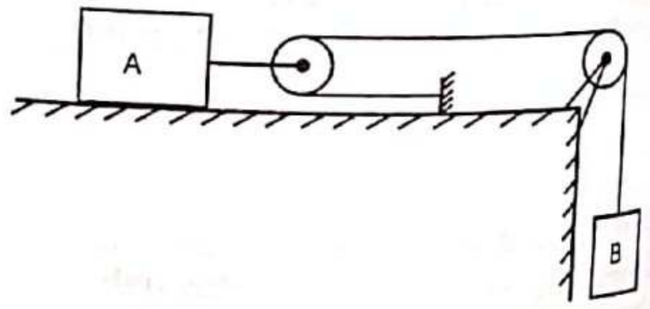

P22. A block weighing 30 N is released from rest and slides down a rough inclined plane having μ = 0.25. It soon comes in contact with a spring of k = 1 N/mm which gets compressed as the block hits it. Find the maximum compression of the spring.

(MU May 14, Dec 17)

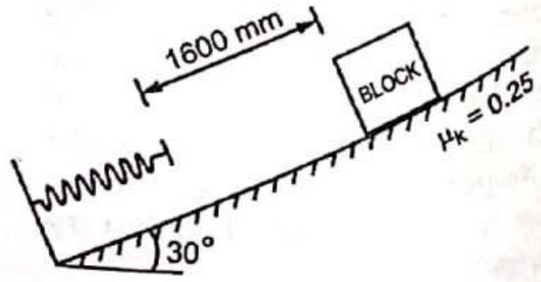

P23. A 3000 N block shown in figure slides down an 50° incline. It starts from rest. After moving 2 m it strikes a spring whose modulus is 20 N/mm. If the coefficient of friction between the block and incline is 0.2, determine,

a) the maximum deformation of spring

b) the maximum velocity of the block.

(NMIMS July 16)

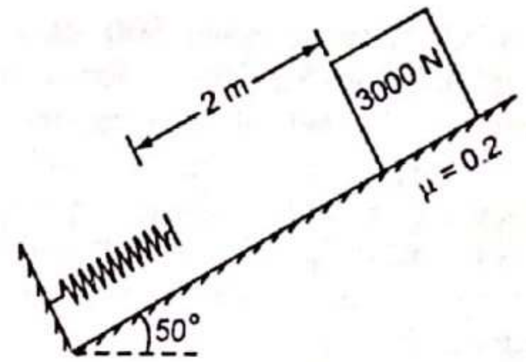

P24. A block of mass 5 kg is released from rest on an inclined plane as shown in figure. Find maximum compression of the spring, if the spring constant is 1 N/mm and coefficient of the friction between the block and the inclined plane is 0.2. ***(VJTI Nov 09)***

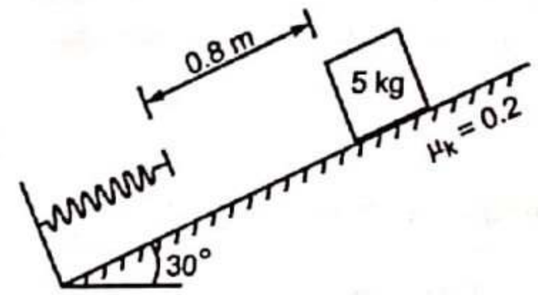

P25. A 7.25 kg mass slides 150 mm from rest down the 25° plane as shown in figure. It hits a spring whose module is 1750 N/m. If the coefficient of kinetic friction is 0.2, determine the maximum compression of spring.

(KJS Nov 15)

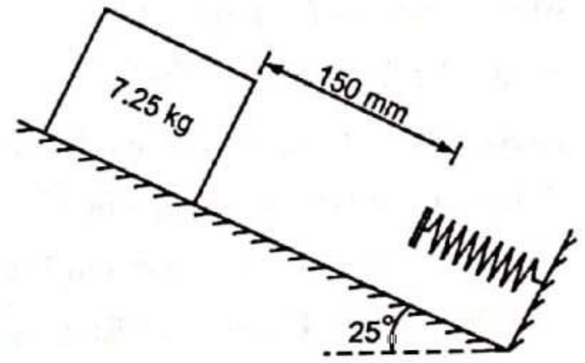

P26. A ball of weight 25 N is suspended from a 1200 mm long elastic cord. The ball is now pulled vertically down by 200 mm and then released. Determine the speed of the ball as it strikes the ceiling. Neglect initial deformation of the elastic cord due to self wt. of the ball.

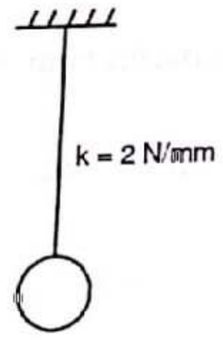

P27. In a bungee jumping event a man of mass 65 kg has a 20 m elastic cord tied to his ankles. The man jumps from a bridge and falls freely for 20 m before the elastic cord begins to stretch. The man reaches 42 m below the bridge before he starts rising upwards. a) Determine the stiffness of the elastic cord.

b) How much below the bridge does the man acquire maximum velocity and the value of this maximum velocity.

P28. A 50 kg block kept on a 15° inclined plane is pushed down the plane with an initial velocity of 20 m/s. If μ_k = 0.4, determine the distance travelled by the block and the time it will take as it comes to rest. ***(MU Dec 13)***

P29. A lift of total mass 500 kg at rest snaps off accidentally and falls freely for 6 m till it comes in contact with a set of four nested springs and is soon brought to a halt. Each nested spring consists of an outer spring of stiffness 10 kN/m and an inner spring of stiffness 15 kN/m. The inner spring is lower by 0.2 m than the outer spring as shown.
Find the maximum deformation of the outer spring as the lift is brought safely to a halt.

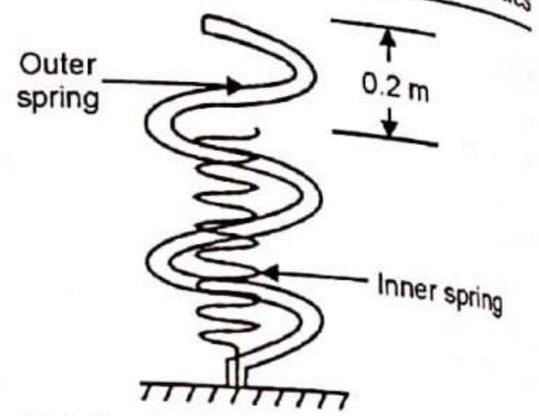

Details of a single nested spring (there are four such sets)

Exercise 11.2

Theory Questions

Q.1 Explain
(i) work of a force (ii) work of a spring force
(iii) work of a weight force (iv) work of a friction force

Q.2 State Work Energy Principle. ***(MU Dec 10, 11)***

Q.3 Derive the relation of Work Energy Principle. ***(MU Dec 07, VJTI May 09)***

Q.4 Explain Power and Efficiency.

Q.5 Explain in detail Mechanical Energy.

Q.6 Define Work, Power and Energy. Explain Principle of Conservation of Energy. ***(VJTI Nov 09, Apr 11, Nov 15)***

Q.7 Differentiate between conservative and non-conservative forces giving examples. ***(VJTI May 10, Nov 10)***

★ ★ ★

Chapter 12

Kinetics of Particles: Impulse Momentum Method

12.1 Introduction

Having studied in the earlier chapters two different approaches, we shall in this chapter learn the third approach to the solution of kinetics of particles. This approach requires the use of Impulse Momentum Equation involving the parameters like force, mass, velocity and time. Using this equation eliminates the determination of acceleration giving direct results in most of the cases.

In the second part of this chapter we shall deduce the Conservation of Momentum Equation from the basic Impulse Momentum Equation and use it to solve problems involving a system of particles subject to internal action and reaction forces and not involving any external forces on the system (i.e. such a system where momentum is conserved).

Study of collision of particles forms the third part of this chapter. Here we shall learn the interesting phenomenon which takes place during a collision. The study reveals that there exists a certain relation between the velocities of the colliding particles before they collide to the velocities they acquire after impact.

12.2 Impulse

Consider a particle acted upon by a force F as shown in Fig. 12.1 (a), for a duration of t sec.

Fig. 12.1 (a)

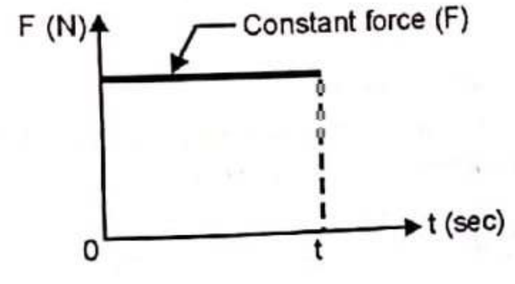

Fig. 12.1 (b)

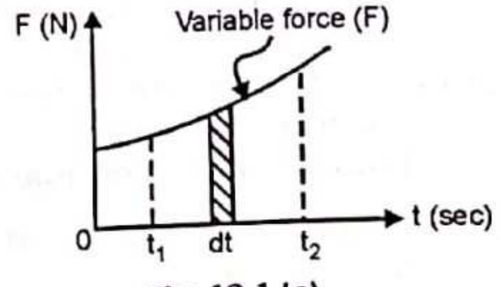

Fig. 12.1 (c)

This force is said to impart an impulse on the particle and the magnitude of this impulse is the product of the force and the duration for which it acts.

If the force F is constant (Fig. 12.1 (b)), during the time it acts, then

$$\textbf{Impulse} = \mathbf{F \times t} \qquad \text{..... [12.1 (a)]}$$

If the force F is variable (Fig. 12.1 (c)), the impulse between the time interval t_1 and t_2 is

$$\textbf{Impulse} = \int_{t_1}^{t_2} \mathbf{F}\,dt \qquad \text{..... [12.1 (b)]}$$

Impulse is a vector quantity and its unit is N.s

12.2.1 *Impulsive Force*

A large force when acts for a very small time and which causes a considerable change in a particle's momentum is called an impulsive force. For example, when a moving particle collides with another particle, the collision duration is very small, but the particles after collision have different magnitudes of velocities and in some cases even different directions of velocities, thereby indicating a considerable change in the momentum.

Other examples of impulsive forces are, when a bat hits a ball, the action and reaction forces at the contact point are impulsive forces which impart a new momentum to the ball. Also when a spring loaded toy gun releases the bullet, the spring force is an impulsive force in this case.

Impulsive forces are different from usual forces for the reason that the impulse generated by the impulsive forces is mainly due to the large force value, which acts for small time, whereas usual forces also generate impulse, where the duration (time) an equally important parameter, is large and equally contributes to the impulse generated.

12.3 Impulse Momentum Equation

From Newton's Second Law Equation we have,

$$\Sigma F = ma$$

or $$\Sigma F = m\frac{dv}{dt} \qquad \text{..... since } a = dv/dt$$

or $$\Sigma F = \frac{d(mv)}{dt} \qquad \text{..... makes no change since } m \text{ is constant.}$$

Here the product mv is referred to as the *linear momentum* of the particle and may be defined as the amount of motion possessed by a moving body. It is a vector quantity and its SI units are kg.m/s or N.s

Now $$\Sigma F\,dt = d\,(mv)$$

Integrating between the time interval t_1 to t_2 during which the velocity of the particle changes from v_1 to v_2.

$$\int_{t_1}^{t_2} \Sigma F\,dt = \int_{v_1}^{v_2} d\,(mv) = mv_2 - mv_1$$

$$\therefore \quad mv_1 + \int_{t_1}^{t_2} \Sigma F\,dt = mv_2$$

$\int_{t_1}^{t_2} \Sigma F\,dt$ is the impulse on the particle, we therefore have

$$\mathbf{mv_1 + Impulse_{1\text{-}2} = mv_2} \qquad \text{..... [12.2]}$$

Equation 12.2 is known as Impulse Momentum Equation. This equation gives rise to Principle of Impulse Momentum which may be stated as "*for a particle or a system of particles acted upon by forces during a time interval, the total impulse acting on the system is equal to the difference between the final momentum and initial momentum during that period*".

12.4 Application of Impulse Momentum Equation

Impulse Momentum Equation is a third equation other than the Newton's Second Law Equation and Work Energy Principle Equation, using which we can analyse the kinetics of particles.

Impulse Momentum Equation involves parameters viz. force, mass, velocity and time. Thus the velocity of the particle at the new position may be worked out knowing the forces acting on the particle and the duration for which they act.

Also, if the initial and final velocities of the particle are known, the duration for which the particle is in motion can be found out.

This method therefore eliminates the calculation of acceleration and many times use of the kinematics relations, to give direct results. We will further deduce the Conservation of Momentum Equation from the Impulse Momentum Equation and apply it to a system of particles where the momentum is conserved.

To use the method of Impulse and Momentum, we need to draw three figures. The L.H.S. figure would show the initial momentum vector of the particle. The central figure shows the F.B.D. of the particle. The R.H.S. figure shows the final momentum vector of the particle. Drawing of these figures helps in writing the Impulse Momentum Equation. Since all terms in this equation are vector quantities, a proper sign convention for the direction need to be chosen before plugging in the values.

Ex.12.1 The 50 kg crate shown in figure, rest on horizontal plane for which the coefficient of kinetic friction is $\mu_k = 0.3$. If the crate does not tip over when it is subjected to a 400 N force, determine the velocity of the crate in 8 sec starting from rest.

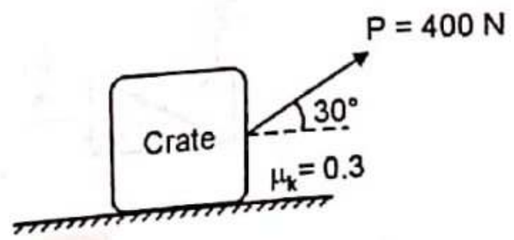

Solution: Applying Impulse Momentum Equation to the 50 kg blocks during its 8 sec motion period.

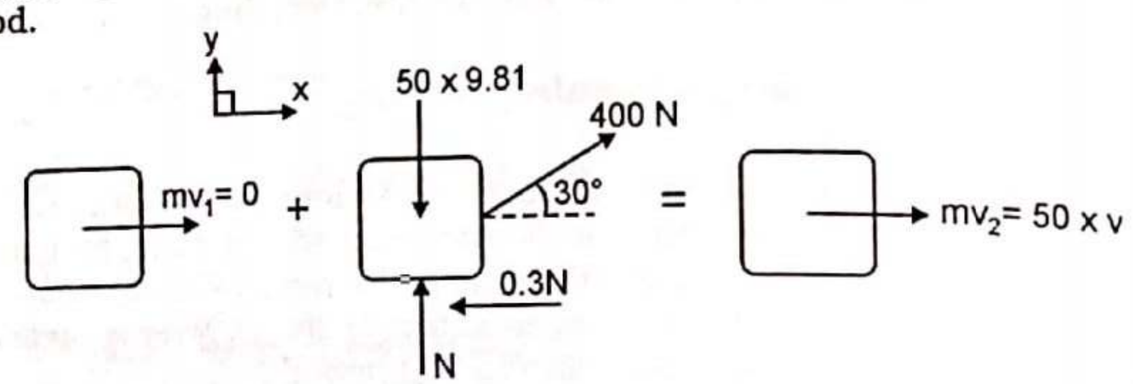

Applying Impulse Momentum Equation in the y direction

$$mv_1 + \text{Impulse}_{1-2} = mv_2$$

$$0 + [400 \sin 30 - 50 \times 9.81 + N] \times 8 = 0$$

$$\therefore \quad N = 290.5 \text{ N}$$

Applying Impulse Momentum Equation in the x direction

$$mv_1 + \text{Impulse}_{1-2} = mv_2$$

$$0 + [400 \cos 30 - 0.3 \times 290.5] \times 8 = 50 v$$

$$\therefore \quad v = 41.48 \text{ m/s}$$ ..... **Ans.**

Ex. 12.2 A truck traveling at a constant speed of 90 kmph on a straight highway carries a package on its flat bed trailor. $\mu_s = 0.3$ and $\mu_k = 0.2$ between the package and the flat bed. If the truck suddenly wants to come to a halt determine the minimum time in which it can do so without the package slipping on the flat bed.

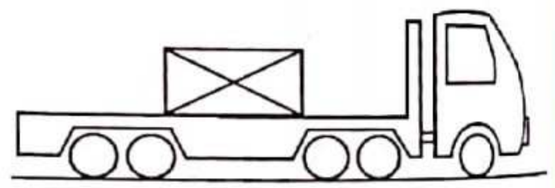

Solution: As the truck driver applies the brakes, the package kept on it tends to slip forward. However the static frictional force prevents the package from slipping. Since the truck has to come to a halt in a minimum possible time implies that the static frictional force reaches its maximum value i.e. $\mu_s N$.

Let us analyse the kinetics of only the package. We shall draw three figures of the package. The L.H.S. and R.H.S. figures represent the initial and final momentum, while the central figure represents the FBD and is use to calculate the impulse, since Impulse = Force × time

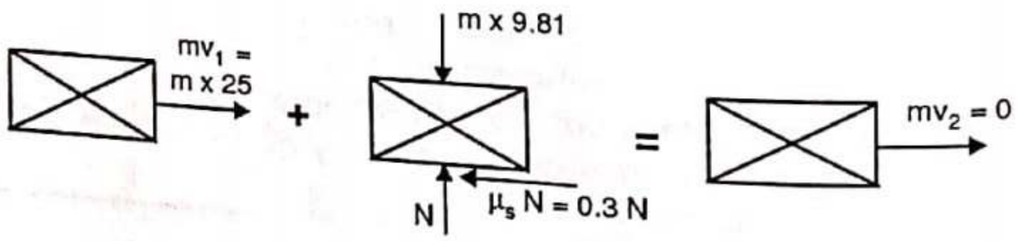

Applying Impulse Momentum Equation in the x direction → + ve

$$mv_1 + \text{Impulse}_{1-2} = mv_2$$

$$m \times 25 + [-0.3 \times (m \times 9.81) \times t] = 0$$

or $\quad t = 8.495$ sec ..... **Ans.**

Force in the x direction is 0.3 N

Impulse = Force × time
= (0.3 N) × t
= 0.3 × (m × 9.81) × t

Ex. 12.3 A block of mass of 50 kg is placed on a plane inclined at 30° with the horizontal. A horizontal force of 250 N acts on the block tending to move the block down the plane. Determine its velocity 4 sec after starting from rest. Take $\mu_k = 0.3$.

Solution: We shall apply the Impulse Momentum Equation to the block for the first 4 sec of its motion.

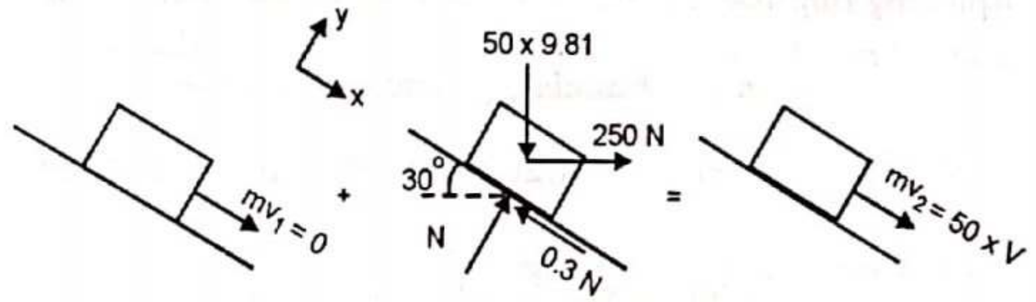

Applying Impulse Momentum Equation in the y direction

$$mv_1 + \text{Impulse}_{1-2} = mv_2$$

Forces in the y direction are the weight component, the component of 250 N and the normal reaction.

$$\therefore \quad 0 + [-50 \times 9.81 \cos 30 + 250 \sin 30 + N] \times 4 = 0$$

or $\quad N = 300$ Newton

Applying Impulse Momentum Equation in the x direction

$$mv_1 + \text{Impulse}_{1-2} = mv_2$$

Forces in the x direction are the weight component, the component of 250 N and the frictional force.

$$\therefore \quad 0 + [50 \times 9.81 \sin 30 + 250 \cos 30 - 0.3 \times 300] \times 4 = 50 v$$

or $\quad v = 29.74$ m/s ..... **Ans.**

Ex. 12.4 A 200 kg package is being pulled up by a cable powered by a motor. For a short time the force in the cable is $F = 1200\, t^2$ N. If the package has an initial velocity of 3 m/s at $t = 0$ find its velocity at $t = 2$ sec. Take $\mu_k = 0.2$ between package and incline.

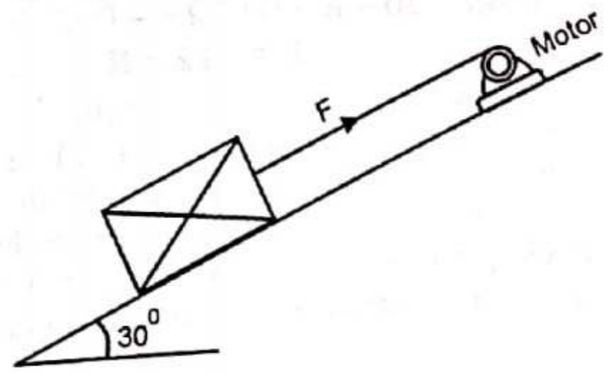

Solution:

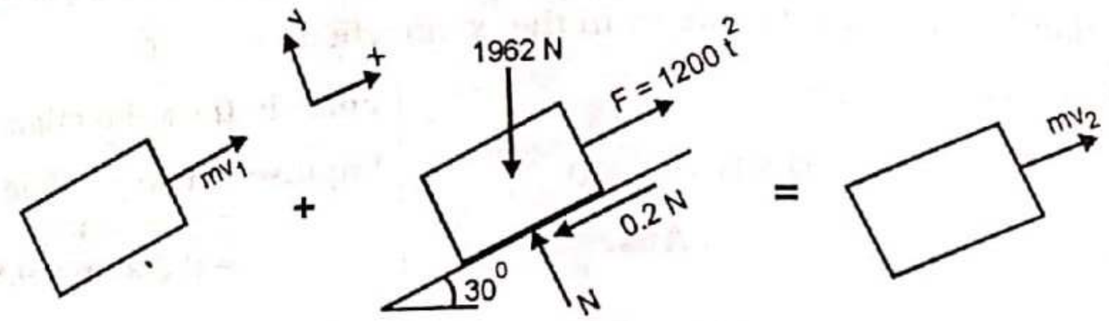

This is a case of variable force for which Impulse = $\int F\,dt$

Applying Impulse Momentum Equation in the x direction

$$mv_1 + \text{Impulse}_{1\text{-}2} = mv_2$$

$$200 \times 3 + \int_0^2 \left[1200\,t^2 - 1962 \sin 30 - 0.2\,(1962 \cos 30)\right] dt = 200 \times v$$

$$600 + \left[1200\frac{t^3}{3} - 1321\,t\right]_0^2 = 200\,v$$

$\therefore$ $v = 5.79$ m/s ..... **Ans.**

Ex. 12.5 A 630 gm cricket ball strikes the bat with a speed of 108 kmph and is hit back by the batsman with a speed of 144 kmph. If the ball was in contact with the bat for 72 milliseconds, determine the average impulsive force exerted on the ball.

Solution: Applying Impulsive Momentum Principle in the x direction to the ball just as it hits the bat and then rebounds back (i.e. during the 72 milliseconds contact period). Let R be the impulsive force received by the ball

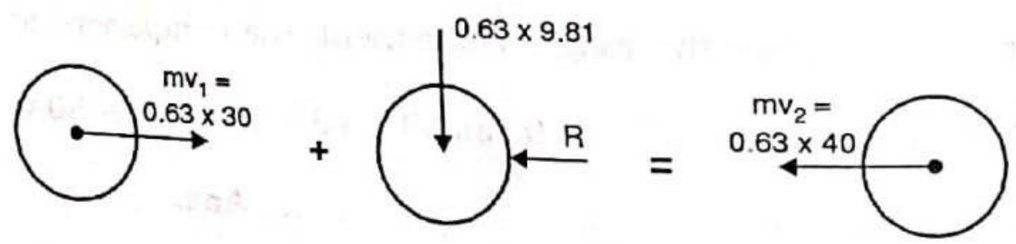

$$mv_1 + \text{impulse}_{1\text{-}2} = mv_2$$

$$0.63 \times 30 - R \times 0.072 = -0.63 \times 40$$

$\therefore$ $R = 612.5$ N ..... **Ans.**

here impulse due to force R
$= F \times t$
$= R \times 0.072$ N.s

12.5 Conservation of Momentum Equation

Figure shows a man (B) standing at the end of a boat (A). The system of man and boat is initially at rest i.e. $v_A = 0$ and $v_B = 0$

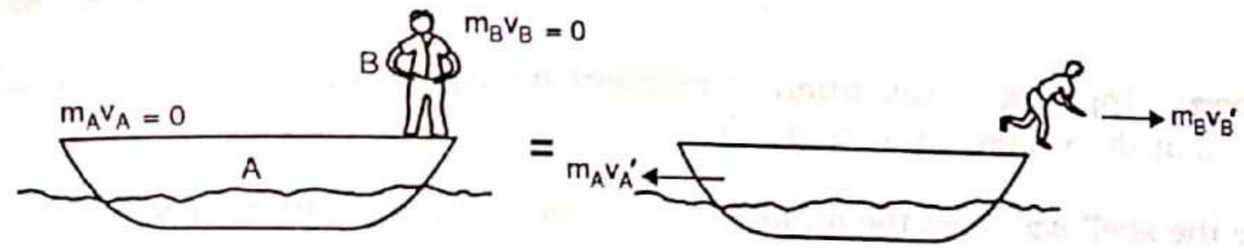

Fig. 12.2

If the man jumps off horizontally in the water with a velocity v_B', he induces a backward motion to the boat, which now starts moving with a velocity v_A'.

If the water resistance is neglected the question is, how is the motion of the boat induced?

To jump off from the boat, the man exerts an impulsive force through his feet on the surface of the boat. This induces a reaction impulsive force to the man, which throws him in the water. Also since the water resistance is small, it may be neglected. Thus the impulsive force exerted by the man is the cause of the backward motion of boat.

The interesting part here is that the impulsive force exerted by the man on the boat or the reaction impulsive force of the boat on the man are nothing but action and reaction forces acting for the same time interval. Due to this the net impulse in the direction of motion is zero. The Impulse Momentum Equation thereby reduces to Conservation of Momentum Equation. Applying this concept to the above example, we have

$$mv_1 + \text{Impulse}_{1\text{-}2} = mv_2$$

i.e. $(m_A v_A + m_B v_B) + \text{Impulse}_{1\text{-}2} = (m_A v'_A + m_B v'_B)$

$$0 = m_A v_A' + m_B v_B'$$

or $-m_A v_A' = m_B v_B'$ | since $m_A v_A = m_B v_B = 0$ and $\text{Impulse}_{1\text{-}2} = 0$,

This relation indicates that knowing the masses of A and B and velocity of man (v_B') as he jumps, we can find the velocity of boat (v_A'). The negative sign attached to the magnitude of the velocity tells us that the boat moves in the opposite direction to that of man.

The conservation of momentum phenomenon takes place in other similar situations such as when a bullet is fired from the gun and thereby the gun recoils backwards, or during the collision of two particles, the particles move with different velocities after the collision. In general we may say *"for dynamic situations involving a system of particles, if the net impulse is zero, the momentum of the system is conserved"*. The equation of Conservation of Momentum is therefore expressed as.

Initial Momentum = Final Momentum ..... **[12.3]**

Ex. 12.6 A shell of weight 200 N is fired from a canon of weight 12 kN with a velocity of 350 m/s as shown. Find the recoil velocity of the canon. Neglect friction.

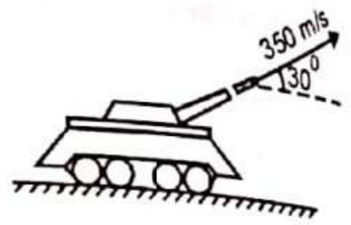

Solution: Applying conservation of momentum equation to the system of canon and the shell in the x direction taking → + ve.

Before the shell was fired the initial momentum of the system was zero.

Initial momentum = Final momentum

$$0 = (m \times v)_{Canon} + (m \times v)_{Shell}$$

$$0 = \frac{1200}{9.81} \times v_{Canon} + \frac{200}{9.81} \times 350 \cos 30$$

$$\therefore \quad v_{Canon} = -5.052 \text{ m/s}$$

$$\text{or} \quad v_{Canon} = 5.052 \text{ m/s} \leftarrow$$ ..... **Ans.**

Ex. 12.7 A man of mass 70 kg and a boy of mass 30 kg dive off the end of a boat, of mass 150 kg, with a horizontal velocity of 2 m/s relative to the boat. If initially the boat is at rest, find its velocity just after

1) both the man and boy dive off simultaneously
2) the man dives first followed by the boy.

Solution: *Case (1) both the person dive simultaneously*

Let the boat move backwards as the man and boy jump forward.
From Relative Motion Equation we can write

$$v_{man/boat} = v_{man} - v_{boat} \qquad \rightarrow + \text{ve}$$

$$2 = v_{man} - (-v_{boat})$$

$$\therefore \quad v_{man} = 2 - v_{boat}$$

also

$$v_{boy/boat} = v_{boy} - v_{boat}$$

$$2 = v_{boy} - (-v_{boat})$$

$$\therefore \quad v_{boy} = 2 - v_{boat}$$

Applying Conservation of Momentum Equation to the system of boy, man and boat

Initial momentum = Final Momentum

$$0 = (m \times v)_{boy} + (m \times v)_{man} + (m \times v)_{boat} \qquad \rightarrow + \text{ve}$$

$$0 = 30\,(2 - v_{boat}) + 70\,(2 - v_{boat}) + 150\,(-v_{boat})$$

$$\therefore \quad v_{boat} = 0.8 \text{ m/s (backwards)}$$ ..... **Ans.**

Case (2) The man dives first followed by the boy

Let the man jump off the boat, the boy still being on the boat.

Applying Conservation of Momentum Equation

Initial Momentum = Final Momentum (→ + ve)

$$0 = (m \times v)_{man} + (m \times v)_{boat}$$

$$0 = 70 \times (2 - v_{boat}) + 180\,(-v_{boat})$$

$$\therefore \quad v_{boat} = 0.56 \text{ m/s (backwards)}$$

Now the boy jumps forwards from the boat which is moving backwards with velocity of 0.56 m/s.
Applying Conservation of Momentum Equation to the system of the boy and boat

Initial Momentum = Final Momentum (→ + ve)

$$(m \times v)_{boat} = (m \times v)_{boy} + (m \times v)_{boat}$$

$$180 \times (-0.56) = 30\,(2 - v_{boat}) + 150\,(-v_{boat})$$

$$\therefore \quad v_{boat} = 0.893 \text{ m/s (backwards)}$$ ..... **Ans.**

Exercise 12.1

P1. A 1200 kg automobile is traveling at 90 kmph when brakes are fully applied, causing all four wheels to skid. If μ_k is 0.1, find the time required for the automobile to come to halt.

P2. The 550 N box rests on a horizontal plane for which the coefficient of kinetic friction, $\mu_k = 0.32$. If the box is subjected to a 400 N towing force as shown, find the velocity of the box in 4 seconds starting from rest. ***(MU May 15)***

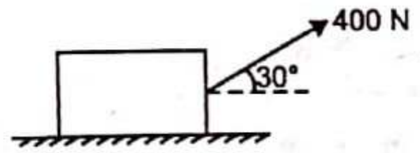

P3. A dish slides 1200 mm on a level table before coming to rest. If $\mu_k = 0.18$ between the dish and table, what was the time of travel.

P4. A car at 72 kmph applies brakes and comes to rest in 8 sec. Find the minimum coefficient of friction between wheel and road.

P5. A bullet of mass 1 gram has a velocity of 1000 m/s as it enters a fixed block of wood. It comes to rest in 2 milliseconds after entering the block. Determine the average force that acted on the bullet and the distance penetrated by it.

P6. A 1500 kg car moving with a velocity of 10 kmph hits a compound wall and is brought to rest in 400 milliseconds. What is the average impulsive force exerted by the wall on the car bumper?

P7. A 380 gm football is kicked by a player so that it leaves the ground at an angle of 40° with the horizontal and lands on the ground 35 m away. Determine the impulse given to the ball. Also find the impulsive force if the contact was for 0.3 sec.

P8. A ball of mass 100 g is moving towards a bat with a velocity of 25 m/s as shown in figure. When hit by a bat, the ball attains a velocity of 40 m/s. If the bat and ball are in contact for a period of 0.015 s. Determine the average impulse force exerted by the bat on the ball during the impact.

(VJTI Nov 09)

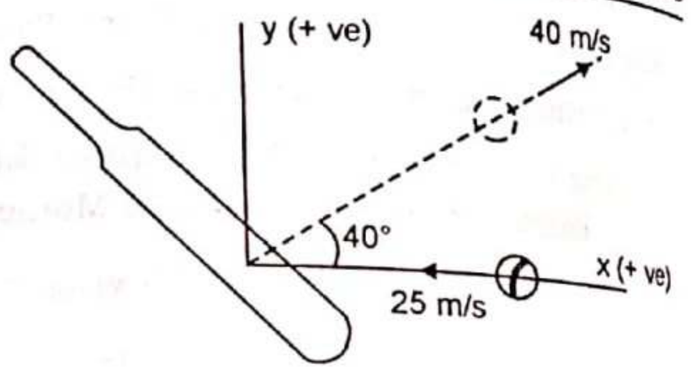

P9. A ball of mass 110 gm is moving towards a batsman with a velocity of 24 m/s as shown. The batsman hits the ball by the bat, causing the ball to attain a velocity of 36 m/s. If ball and bat are in contact for a period of 0.015 sec, determine the average impulsive force exerted on the ball during the impact. ***(NMIMS July 16)***

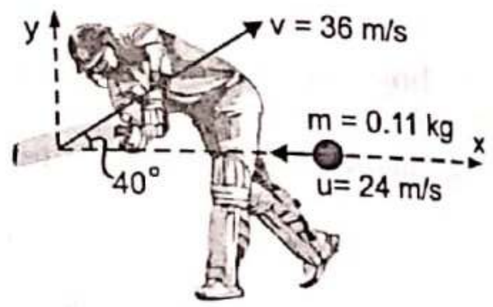

P10. A 2 kg mass rests on a smooth horizontal plane. It is struck with a 9N blow that lasts 0.02 second. Three seconds after the start of the first blow a second blow of 9N is delivered. This lasts for 0.01 second. What is the speed of the body after 4 seconds? Refer figure.

(VJTI May 08)

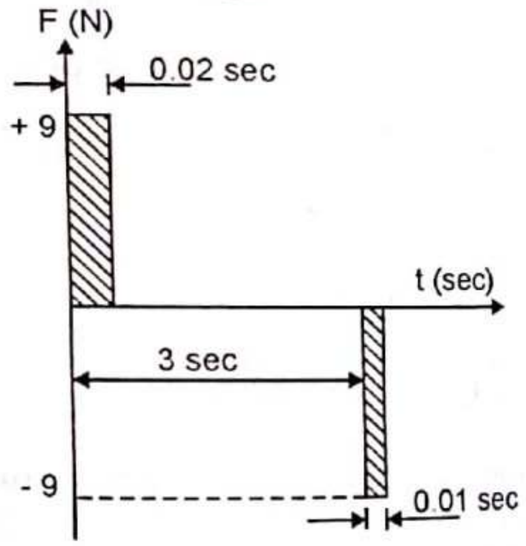

P11. Figure shows a block of weight 10 N sliding down from rest on a rough inclined plane. Taking $\mu = 0.2$ and $\theta = 30°$, calculate
(i) The impulse of the forces acting in the interval $t = 0$ to $t = 5$ sec
(ii) The velocity at the end of 5 sec
(iii) The distance covered by the block.

(VJTI Dec 13)

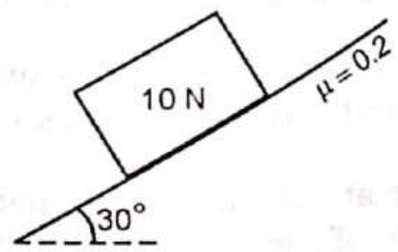

P12. A 30 kg boy stands stationary on a 50 kg boat. If the boy jumps off the boat, determine the velocity of the boat just after the jump if

a) The boy jumps off horizontally with a velocity of 3 m/s.

b) The boy jumps off the boat horizontally with a relative velocity of 3 m/s w.r.t boat.

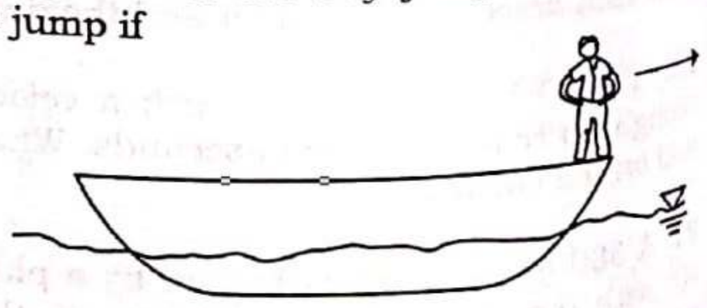

12.6 Impact

A collision of two bodies which takes place during a very small time interval and during which the colliding bodies exert relatively larger forces on each other is known as Impact.

12.6.1 Line of Impact

When two bodies collide, the line joining the common normals of the colliding bodies is known as Line of Impact. Refer figure 12.3

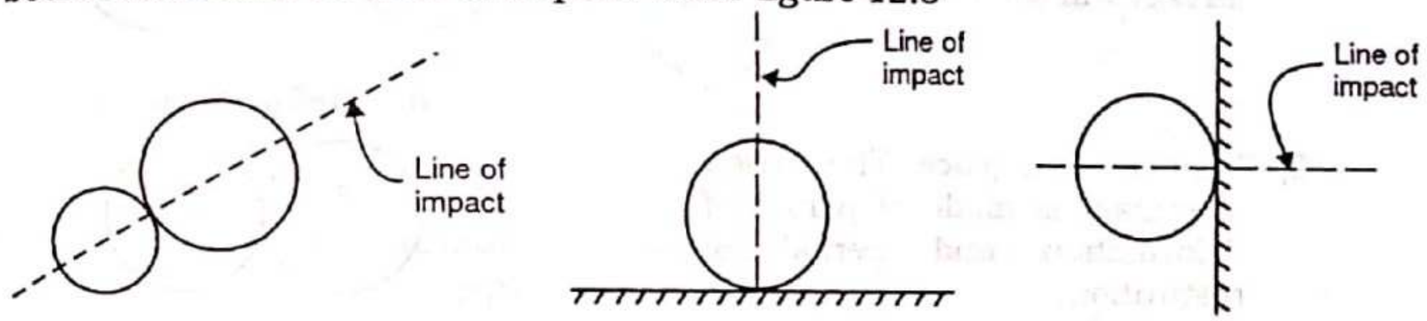

(a) Two strikers collide (b) Ball strikes the ground (c) Ball hits a wall

Fig. 12.3

12.6.2 Types of Impact

Impacts are basically divided into two categories viz. a Central Impact and an Eccentric Impact. When the mass centres of the colliding bodies lie on the Line of Impact, the Impact is said to be a Central Impact. When the mass centres of the colliding bodies are not located on the Line of Impact, we call such Impact to be an Eccentric Impact.

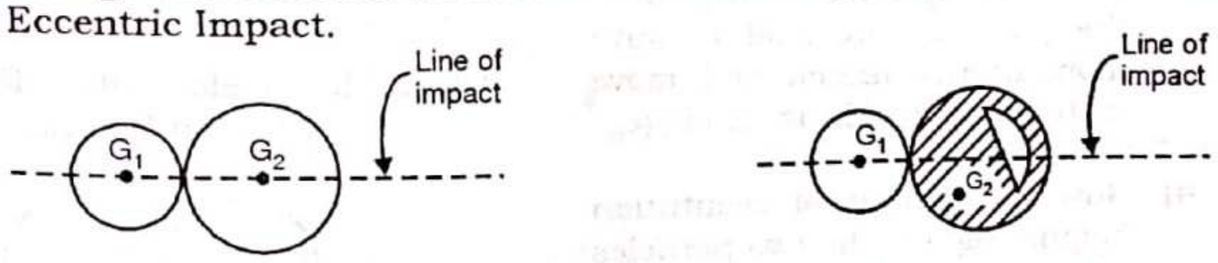

Central Impact Eccentric Impact

Fig. 12.4

Central Impact is further classified into Direct Impact and Oblique impact.

In case of Direct Central Impact, the bodies travel along the Line of Impact i.e. their velocities are directed along the Line of Impact. On the other hand in case of Oblique Central Impact, the velocities of one or both the bodies are not directed along the Line of Impact.

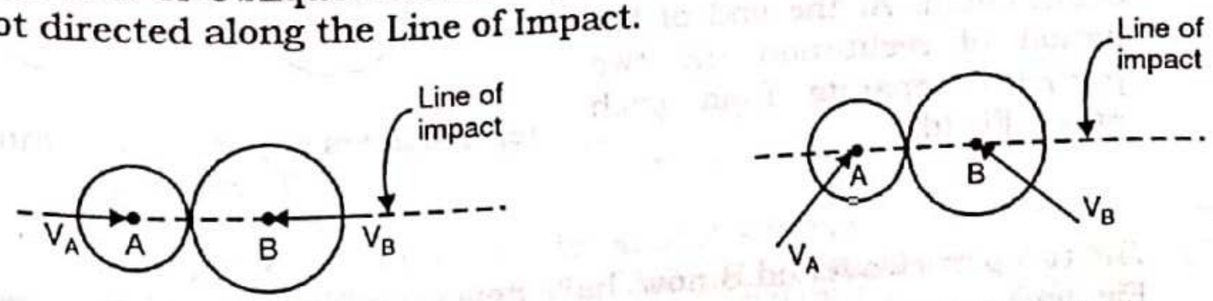

Direct Central Impact Oblique Central Impact

Fig. 12.5

12.7 Direct Central Impact

Let us now study the phenomenon of a Direct Central Impact. What really happens during an impact is quite interesting. Let us understand stage by stage as to what happens during a direct central impact.

1) Fig. (a) shows two particles A and B with velocities v_A and v_B. If v_A is grater than v_B, the impact will soon take place.

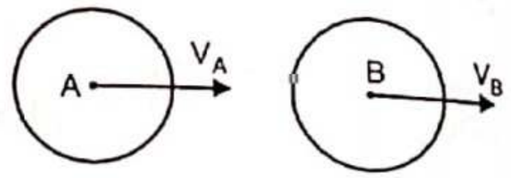

(a) Before Impact

2) Impact takes place. The period of impact is made of period of deformation and period of restitution.

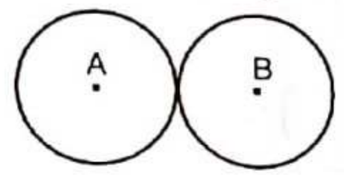

(b) On Impact Deformation Begins

3) During the period of deformation Fig (b), the two particles exert large impulsive force on each other. The deformation of both the particles continue till maximum deformation. At this stage both the particles are said to have momentarily united and move with common velocity v. Fig (c).

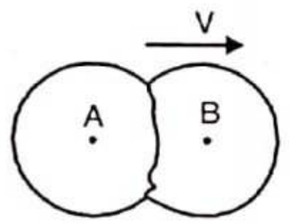

(c) At Max. Deformation Restitution period Begins

4) Now the period of restitution begins Fig (c). The two particles restore their shape during this period. Sometimes permanent deformations are also set in the particles. During this period the impulsive force exerted by the two particles is lesser than during the period of deformation. At the end of the period of restitution the two particles separate from each other. Fig.(d).

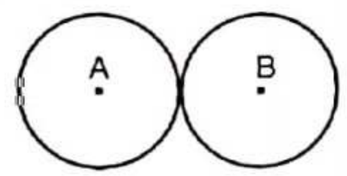

(d) Restitution period ends

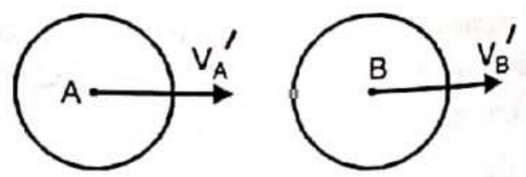

(e) Particles separate and move with new velocities

Fig. 12.6

5) The two particles A and B now have new velocities v_A' and v_B' respectively. Fig. (e).

12.7.1 Coefficient of Restitution:

Let us apply Impulse Momentum Equation in the x direction to the particle A during the period of deformation. Let P be the impulsive force exerted by particle B on A. At the start of period of deformation the velocity of particle A is v_A and at the end of period of deformation its velocity changes to v, being the common velocity of A and B.

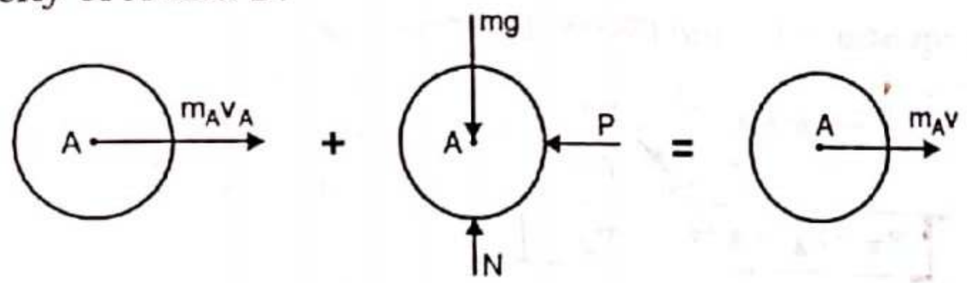

Fig. 12.7 (a)

$$mv_1 + \text{Impulse}_{1\text{-}2} = mv_2$$

$$m_Av_A - \int P\,dt = m_Av \qquad \text{..... (1)}$$

here $\int P\,dt$ is the impulse due to the impulsive force P acting during the period of deformation. Now let us apply Impulse Momentum Equation to the particle A during the period of restitution. During this period a smaller impulsive force say R be exerted by particle B on A. At the start of period of restitution the velocity of A is v and changes to v_A' at the end of the period of restitution.

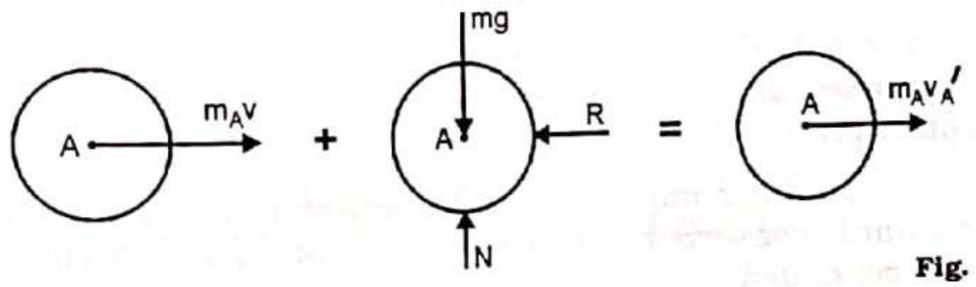

Fig. 15.7 (b)

$$mv_1 + \text{Impulse}_{1\text{-}2} = mv_2$$

$$m_Av - \int R\,dt = m_Av_A' \qquad \text{..... (2)}$$

here $\int R\,dt$ is the impulse due to the impulsive force R acting during the period of restitution

From equations (1) and (2) we have

$$\frac{\int R\,dt}{\int P\,dt} = \frac{v - v_A'}{v_A - v}$$

If $\quad e = \dfrac{\int R\,dt}{\int P\,dt} \quad$ then $\quad e = \dfrac{v - v_A'}{v_A - v} \qquad$ ..... (3)

e is referred to as the Coefficient of Restitution and is defined as the ratio of the impulse exerted between the colliding particles during the period of restitution to the impulse exerted during the period of deformation.

Similarly if the Impulse Momentum Equation is applied to the particle B, we get

$$e = \frac{v_B' - v}{v - v_B} \qquad \text{..... (4)}$$

From basic algebra if $A = \frac{B}{C} = \frac{D}{E}$, then $A = \frac{B+D}{C+E}$

From equations (4) and (5) we therefore have,

$$e = \frac{\cancel{v} - v_A' + v_B' - \cancel{v}}{v_A - \cancel{v} + \cancel{v} - v_B} \qquad \therefore \qquad e = \frac{v_B' - v_A'}{v_A - v_B}$$

or $$\boxed{v_B' - v_A' = e(v_A - v_B)} \qquad \text{..... [12.4]}$$

we will refer equation 15.4 as Coefficient of Restitution Equation.

The value of coefficient of restitution 'e' lies between 0 and 1. It mainly depends on the nature of the bodies of collision. For example, the rebound velocity of a rubber ball which falls freely from a certain height on to the ground is different from that of a tennis ball which falls freely from the same height.

A special case arises if e = 0 or if e = 1

If e = 0, the impact is referred to as a *perfectly plastic impact.* In such impact the two bodies move with same velocity after impact. The momentum is conserved but loss of energy takes place.

If e = 1, the impact is referred to as a *perfectly elastic impact.* In such impact momentum is conserved and there is also no loss of energy i.e. energy is also conserved.

For all other impacts e lies between 0 and 1. In such impacts the momentum is conserved, but there is loss of energy during impact, as heat and sound is generated.

12.7.2 *Procedure to solve Direct Central Impact Problems:*

Given velocities before impact i.e v_A, v_B and coefficient of restitution e and to find velocities after impact.

Step (1) During impact since there are no external forces acting on the colliding bodies, the momentum of the system is conserved. i.e. conservation of momentum is applicable, which is

Initial Momentum = Final Momentum

$$m_A v_A + m_B v_B = m_A v_A' + m_B v_B'$$

Step (2) Use Coefficient of Restitution Equation i.e.

$$v_B' - v_A' = e(v_A - v_B)$$

Step (3) solve the two equations to find the velocities v_A' and v_B' after impact.

Note: Take proper sign conventions for the direction of velocities while using the Conservation of Momentum and Coefficient of Restitution Equations.

12.7.3 *Special Case of Direct Central Impact*

A special case happens when a ball has a direct central impact with a rigid body of infinite mass. For example, a ball hitting a wall or striking the ground. Consider one such case of ball having a direct central impact with ground.

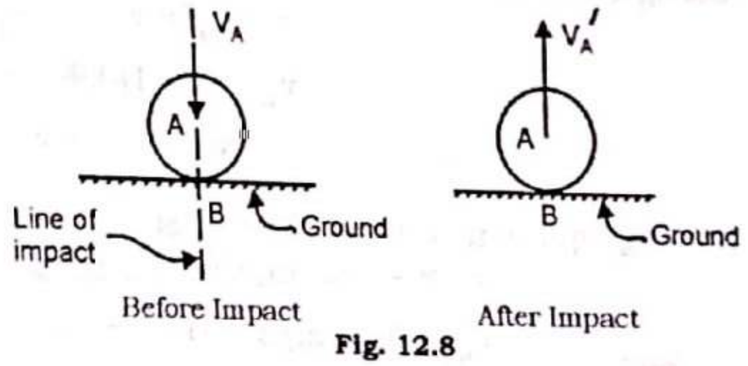

Fig. 12.8

Applying Coefficient of Restitution Equation, we get

$$v_B' - v_A' = e(v_A - v_B)$$

$$\therefore \quad 0 - v_A' = e(v_A - 0) \qquad \because v_B = v_B' = 0$$

$$\therefore \quad v_A' = -e\,v_A$$

The – ve sign indicates that the motion of ball after impact is in the opposite direction

∴ The magnitude of the velocity of a ball after a direct central impact with ground or wall is given by

$$v_A' = e\,v_A \qquad \text{..... equation for special case of direct impact}$$

12.7.4 *Relation between 'e' and Height of Bounce 'h'*

Let a ball be dropped from a height 'h' on the ground. Let h' be the height of rebound after 'n' bounces. If 'e' is the coefficient of restitution between the ball and the ground,

then e is related to h' as $e = \left(\frac{h'}{h}\right)^{\frac{1}{2n}}$

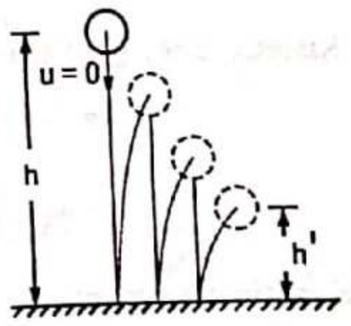

Ex. 12.8 A 2 kg ball moving with 0.4 m/s towards right, collides head on with another ball of mass 3 kg, moving with 0.5 m/s towards left. Determine the velocities of the balls after impact and the corresponding percentage loss of kinetic energy, when

i) the impact is perfectly elastic
ii) the impact is perfectly plastic
iii) the impact is such that e = 0.7

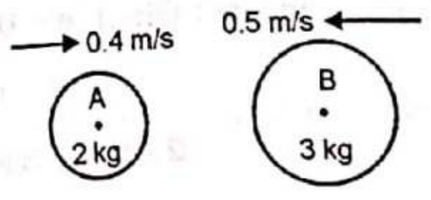

Solution: This is a case of Direct Central Impact.

i) Impact is perfectly elastic i.e. e = 1

Using Conservation of Momentum Equation → + ve

$$m_A v_A + m_B v_B = m_A v_A' + m_B v_B'$$

$$2 \times 0.4 + 3 \times (-0.5) = 2v_A' + 3v_B' \qquad \text{..... (1)}$$

$$-0.7 = 2v_A' + 3v_B'$$

Using Coefficient of Restitution Equation $\rightarrow +ve$

$$v_B' - v_A' = e[v_A - v_B]$$

$$v_B' - v_A' = 1[0.4 - (-0.5)]$$

$$v_B' = 0.9 + v_A' \quad \text{..... (2)}$$

Solving equations (1) and (2), we get

$$v_A' = -0.68 \text{ m/s} = 0.68 \text{ m/s} \leftarrow \quad \text{..... Ans.}$$

$$v_B' = 0.22 \text{ m/s} = 0.22 \text{ m/s} \rightarrow \quad \text{..... Ans.}$$

Since impact is perfectly elastic, implies that the energy is conserved i.e. there will be no loss of kinetic energy.

ii) Impact is perfectly plastic i.e. $e = 0$

In this case, the particles move together with a common velocity after impact,
i.e $v_A' = v_B' = v'$

Using Conservation of Momentum Equation

$$m_A v_A + m_B v_B = m_A v_A' + m_B v_B' \rightarrow +ve$$

$$2 \times 0.4 + 3 \times (-0.5) = 2v' + 3v'$$

$$\therefore \quad v' = -0.14 \text{ m/s}$$

i.e. $v_A' = v_B' = 0.14$ m/s $\leftarrow$ ..... **Ans.**

Kinetic energy of the system before impact

$$= \frac{1}{2} m v_A^2 + \frac{1}{2} m v_B^2$$

$$= \tfrac{1}{2} \times 2 \times (0.4)^2 + \tfrac{1}{2} \times 3 \times (0.5)^2 = 0.535 \text{ J}$$

Kinetic energy of the system after impact

$$= \tfrac{1}{2} \times 2 \times (0.14)^2 + \tfrac{1}{2} \times 3 \times (0.14)^2 = 0.049 \text{ J}$$

$\therefore$ Percentage loss of kinetic energy $= \dfrac{0.535 - 0.049}{0.535} \times 100 = 90.84$ ..... **Ans.**

iii) Impact when $e = 0.7$

$$m_A v_A + m_B v_B = m_A v_A' + m_B v_B' \rightarrow +ve$$

$$2 \times 0.4 + 3 \times (-0.5) = 2v_A' + 3v_B'$$

$$-0.7 = 2v_A' + 3v_B' \quad \text{..... (1)}$$

Using Coefficient of Restitution Equation

$$v_B' - v_A' = e[v_A - v_B]$$

$$v_B' - v_A' = 0.7[0.4 - (-0.5)]$$

$$v_B' = 0.63 + v_A' \quad \text{..... (2)}$$

Solving equations (1) and (2)

$$v_A' = -0.518 \text{ m/s} = 0.518 \text{ m/s} \leftarrow \quad \text{..... Ans.}$$

$$v_B' = 0.112 \text{ m/s} = 0.112 \text{ m/s} \rightarrow \quad \text{..... Ans.}$$

Kinetic energy of the system after impact

$$= \tfrac{1}{2} \times 2 \times (0.518)^2 + \tfrac{1}{2} \times 3 \times (0.112)^2 = 0.287 \text{ J}$$

$\therefore$ Percentage loss of kinetic energy $= \dfrac{0.535 - 0.287}{0.535} \times 100 = 46.33$ ..... **Ans.**

Ex. 12.9 A ball is dropped on a smooth horizontal floor from which it bounces to a height of 4 m. On the second bounce it attains a height of 3 m. Find the coefficient of restitution between the ball and the floor.

Solution: Given $h = 4$ m, $h' = 3$ m, $n = 1$.

using $e = \left(\dfrac{h'}{h}\right)^{\frac{1}{2n}}$ $\quad \therefore \quad e = \left(\dfrac{3}{4}\right)^{\frac{1}{2\times 1}}$

$\therefore \quad e = 0.866$ ..... **Ans.**

Where n = no. of bounces
h = Initial height of fall
h′ = height of rebound after n^{th} bounce.

Ex.12.10 A ball drops from the ceiling of a room. After rebounding twice from the floor it reaches a height equal to half that of ceiling, find the coefficient of restitution. ***(MU Dec 08)***

Solution: Let e be the coefficient of restitution between the ball and the floor.

Using standard relation $e = \left(\dfrac{h'}{h}\right)^{\frac{1}{2n}}$

Where n = no. of bounces
h = Initial height of fall
h′ = height of rebound after n^{th} bounce.

Let the ball fall from initial height of H and after 2 bounces it reaches a height of $\dfrac{H}{2}$ as given.

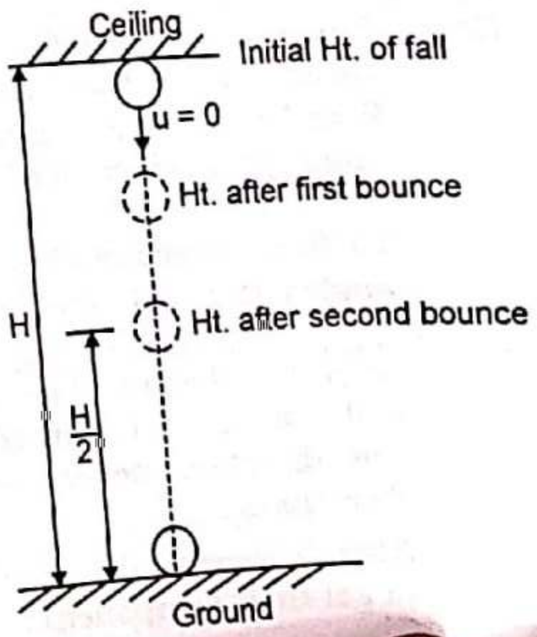

$$\therefore \quad e = \left(\frac{\frac{H}{2}}{H}\right)^{\frac{1}{2\times 2}} \quad \text{or} \quad e = \left(\frac{1}{2}\right)^{\frac{1}{4}} = 4\sqrt{\frac{1}{2}} = 0.841 \text{ ... Ans.}$$

Ex. 12.11 A tennis ball of 75 gm mass falls on ground through a height of 75 m. How many times it will bounce before it comes to rest? Take e = 0.7 **(MU Dec 07)**

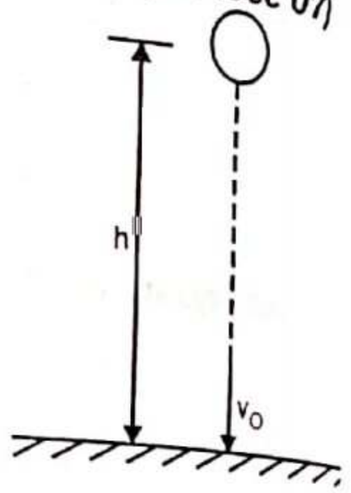

Solution: Let us consider a ball dropped from a height h hit the ground. It's velocity just before impact is $\boxed{v_0 = \sqrt{2gh}\,.}$

The ball has a direct impact and its velocity just after first impact would be $v_1 = ev_0$. The ball would reach its maximum height and hit back the ground with the same velocity i.e. ev_0.

The ball again has a direct impact and its velocity just after 2nd bounce would be $v_2 = e(ev_0) = e^2v_0$.

$\therefore$ velocity after n bounces $v_n = e^n v_0$

For the ball to come to rest $v_n = 0$ i.e. e^n should be zero. Since e is less than 1, n should be infinite.

Hence theoretically the ball would come to rest after infinite bounces. ..... **Ans.**

12.8 Oblique Central Impact

When the velocities of either one or both colliding particles is not directed along the line of impact, the impact is said to be Oblique Central Impact. In such an impact not only the magnitudes of velocities after impact are unknown, but the new direction of travel is also unknown and needs to be worked out.

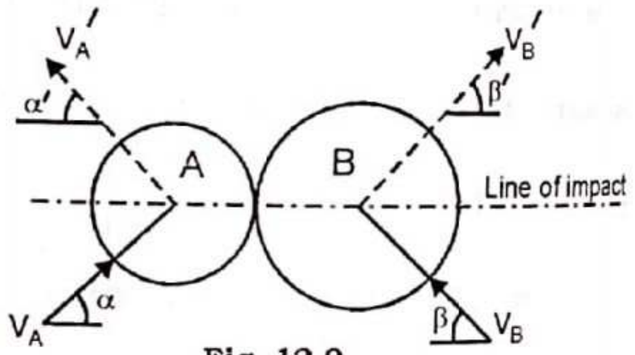

Fig. 12.9

In an Oblique Central Impact the impulsive force acts along the line of impact. Thus velocity changes occur only along the line of impact and no change in velocity takes place in a direction perpendicular to the line of impact.

12.8.1 *Procedure to Solve Oblique Central Impact Problems:*

Given: Initial velocities of particles A and B to be v_A at an angle α and v_B at an angle β, coefficient of restitution e.

To find: Velocities v_A' and v_B' and new angles α' and β' after impact.

Step 1) Let the line of impact be now called as n direction of impact. Let t be the direction perpendicular to the n direction.

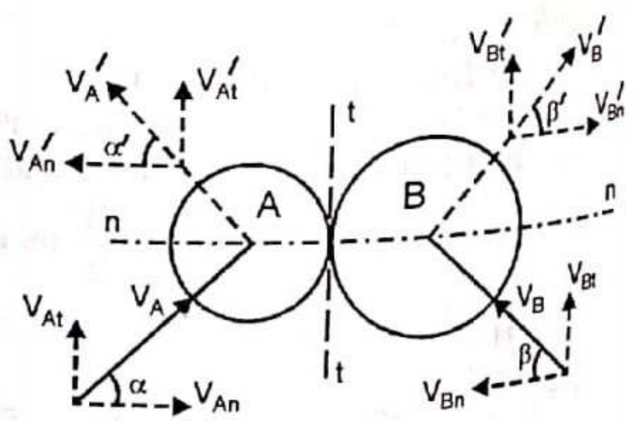

Fig. 12.10

Step 2) Resolve the initial velocities v_A and v_B along the n and t direction so as to get their components v_{An}, v_{At} and v_{Bn}, v_{Bt}.

Step 3) Work as a direct impact problem in the n direction, taking v_{An} and v_{Bn} as initial velocities. Using Conservation of Momentum and Coefficient of Restitution Equations, find velocity components $v_A'_n$ and $v_B'_n$ after impact.

Step 4) Work in the t direction. Since velocities don't change in the t direction, we have

$$v_A'_t = v_{At} \quad \text{and} \quad v_B'_t = v_{Bt}$$

Step 5) The magnitudes of velocities after impact are therefore given as

$$v_A' = \sqrt{(v_A'_n)^2 + (v_A'_t)^2} \quad \text{and} \quad v_B' = \sqrt{(v_B'_n)^2 + (v_B'_t)^2}$$

The new direction of velocity is given as

$$\alpha' = \tan^{-1}\frac{v_A'_t}{v_A'_n} \quad \text{and} \quad \beta' = \tan^{-1}\frac{v_B'_t}{v_B'_n}$$

12.8.2 *Special Case of Oblique Central Impact*

A special case happens when a ball has oblique central impact with a rigid infinite mass such as a rigid wall or ground. Consider one such case of a ball having an oblique impact with the ground.

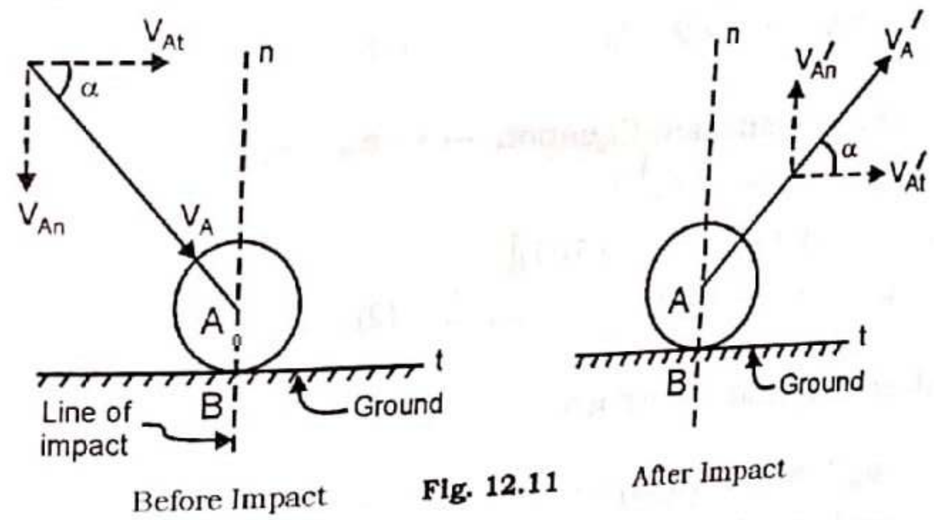

Fig. 12.11

Applying Coefficient of Restitution Equation in the n direction of impact, we get

$$v_B'_n - v_A'_n = e\,[v_{An} - v_{Bn}]$$

$$0 - v_A'_n = e\,[v_{An} - 0] \qquad \because v_{Bn} = v_B'_n = 0$$

$$\therefore \quad v_A'_n = -e\,v_{An}$$

since velocities don't change in the t direction, we get

$$v_A'_t = v_{At}$$

$\therefore$ The magnitude of the velocity components of a ball after oblique impact with ground or rigid wall is given by

$$\left.\begin{aligned} \mathbf{v_A'_n} &= \mathbf{e\,v_{An}} \\ \text{and} \quad \mathbf{v_A'_t} &= \mathbf{v_{At}} \end{aligned}\right\} \text{..... equations for special case of oblique impact}$$

Ex. 12.12 Two smooth balls collide as shown. Find the velocities after impact.
Take m_A = 1 kg, m_B = 2 kg and e = 0.75

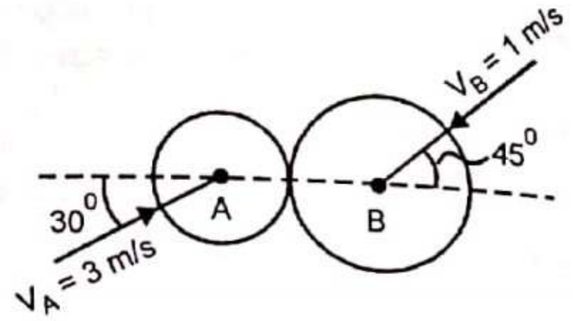

Solution: This is a case of Oblique Central Impact
Let the line of impact be the n direction and a perpendicular to it be the t direction.
Resolving the velocities along n and t direction.

v_{An} = 2.6 m/s →, v_{At} = 1.5 m/s ↑
v_{Bn} = 0.707 m/s ←, v_{Bt} = 0.707 m/s ↓

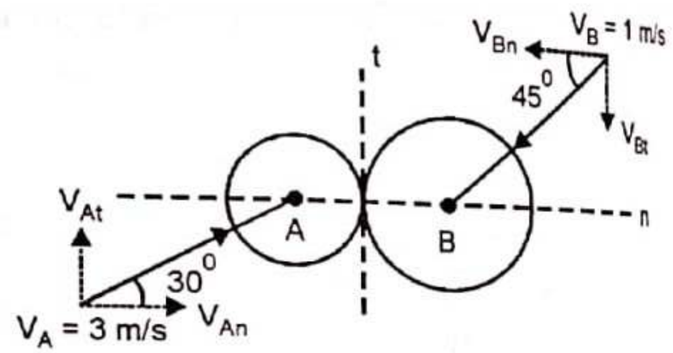

Working in n direction

Using Conservation of Momentum Eqn. → + ve

$$m_A v_{An} + m_B v_{Bn} = m_A v_A'_n + m_B v_B'_n$$
$$1\times 2.6 + 2\times(-0.707) = 1\times v_A'_n + 2 v_B'_n$$
$$1.186 = v_A'_n + 2 v_B'_n \quad \text{..... (1)}$$

Using Coefficient of Restitution Equation → + ve

$$v_B'_n - v_A'_n = e[v_{An} - v_{Bn}]$$
$$v_B'_n - v_A'_n = 0.75[2.6 - (-0.707)]$$
$$v_B'_n = v_A'_n + 2.48 \quad \text{..... (2)}$$

Solving equations (1) and (2), we get

$$v_A'_n = -\ 1.26 \text{ m/s} = 1.26 \text{ m/s} \leftarrow$$
$$v_B'_n = 1.22 \text{ m/s} = 1.22 \text{ m/s} \rightarrow$$

Working in t direction

Since velocities don't change in t direction

$$v_A'_t = v_{At} = 1.5 \text{ m/s} \uparrow$$
$$v_B'_t = v_{Bt} = 0.707 \text{ m/s} \downarrow$$

∴ Total velocity $v_A' = \sqrt{(v_A'_n)^2 + (v_A'_t)^2} = \sqrt{(1.26)^2 + (1.5)^2} = 1.96$ m/s

at angle $\alpha' = \tan^{-1}\left(\dfrac{v_A'_t}{v_A'_n}\right) = \tan^{-1}\left(\dfrac{1.5}{1.26}\right) = 50°$ ↖

∴ $v_A' = 1.96$ m/s, $\alpha' = 50°$ ↖ ..... **Ans.**

Similarly total velocity $v_B' = \sqrt{(v_B'_n)^2 + (v_B'_t)^2} = \sqrt{(1.22)^2 + (0.707)^2} = 1.41$ m/s

at angle $\beta' = \tan^{-1}\left(\dfrac{v_B'_t}{v_B'_n}\right) = \tan^{-1}\left(\dfrac{0.707}{1.22}\right) = 30.1°$

∴ $v_B' = 1.41$ m/s, $\beta' = 30.1°$ ↘ ..... **Ans.**

Ex. 12.13 A ball of mass m kg strikes an inclined smooth surface with a velocity v_A = 3 m/s as shown. Find the magnitude of velocity of rebound.
Take e = 0.8 ***(MU May 13)***

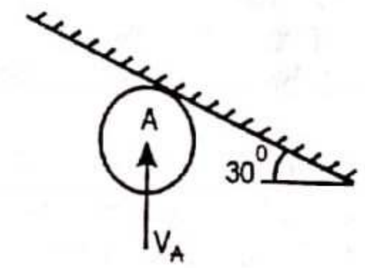

Solution: This is a special case of oblique impact because a finite mass ball strikes an infinite mass body.
Resolving the initial velocity v_A along the line of impact (n direction) and perpendicular to line of impact (t direction)

$$v_{An} = v_A \cos 30 = 3\cos 30$$
∴ $$v_{An} = 2.6 \text{ m/s}$$
$$v_{At} = v_A \sin 30 = 3\sin 30$$
∴ $$v_{At} = 1.5 \text{ m/s}$$

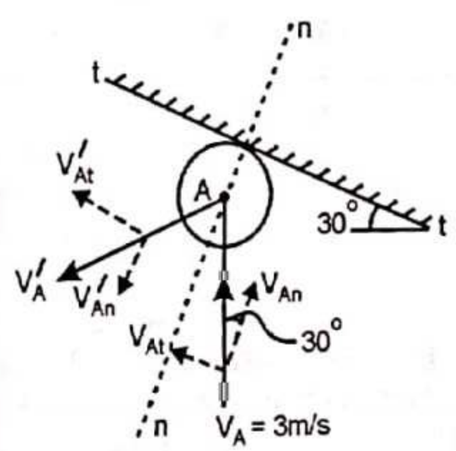

Since it a special case of oblique impact

$$v'_{At} = v_{At}$$
$$= 1.5 \text{ m/s}$$
$$v'_{An} = e \times v_{An} = 0.8 \times 2.6$$
$$= 2.08 \text{ m/s}$$

$$v'_A = \sqrt{v'^2_{An} + v'^2_{At}} = \sqrt{2.08^2 + 1.5^2}$$
∴ $$v'_A = 2.564 \text{ m/s}$$ ..... **Ans.**

Exercise 12.2

P1. Two particles of masses 10 kg and 20 kg are moving along a straight line towards each other at velocities of 4 m/s and 1 m/s respectively as shown. If e = 0.6, determine the velocities of the particles immediately after collision. Also find the loss of kinetic energy. ***(VJTI Dec 13, KJS Nov 15)***

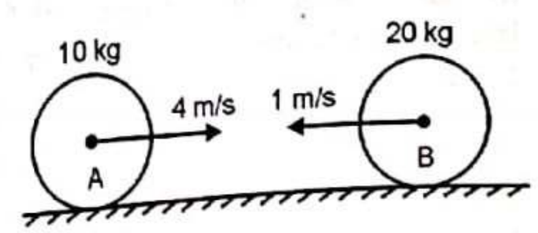

P2. Two balls with masses 20 kg and 30 kg are moving towards each other with velocities 10 m/s and 5 m/s respectively. If after impact the ball having mass 30 kg reverse its direction of motion and moves with velocity of 6 m/s, then determine the coefficient of restitution between the two balls. ***(MU Dec 15, Dec 17)***

P3. Ball A of mass 0.6 kg moving to the right with a velocity of 4 m/s has a direct central impact with ball B of mass 0.3 kg moving to left with a velocity of 1 m/s. If after impact the velocity of ball B is observed to be 5 m/s to the right, determine the coefficient of restitution between the two balls. ***(VJTI Apr 17)***

P4. A railway wagon weighing 400 kN and moving to the right with a velocity of 2 m/s, collides with another wagon weighing 200 kN and moving with 5 m/s in the opposite direction. If the two wagons move together after impact, find the magnitude and direction of their common velocity. Also find the % loss of kinetic energy of the system.

P5. Two identical balls A and B are at rest on a smooth surface. A ball C of different material but of same mass and moving with a velocity of 1.5 m/s strikes ball B. If the coefficient of restitutions between B and C is 0.8 and that of A and B is 0.5. Determine velocity of each ball after all collisions have taken place. ***(NMIMS July 16)***

P6. Three identical cars A, B and C are ready for dispatch from a factory. At the instant the cars have their brakes released. An accidental forward push to car A causes it to move with a velocity of 2 m/s and hit car B.

(a) Determine the speed of cars A and B just after the impact.

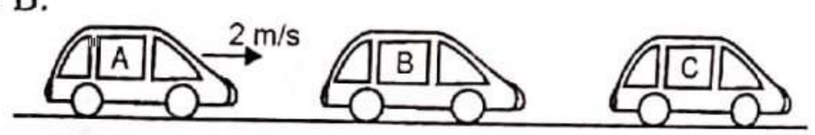

(b) If a series of collision takes place between the three cars, determine the velocities of the three cars after all collisions are over. Take e = 0.7 between the bumpers.

P7. A ball of mass 2 kg impinges on a ball of mass 4 kg which is moving in the same direction as the first. If e is ¾ and the first ball is reduced to rest after the impact. Find the ratio between velocities of balls before the impact. ***(VJTI Nov 10)***

P8. A ball is dropped on to a smooth horizontal floor from a height of 4 m. On the second bounce it attains a height of 2.25 m. What is the coefficient of restitution between the ball and the floor? ***(MU May 11)***

P9. A glass ball is dropped on to a smooth horizontal floor from which it bounces to a height of 9 m. On the second bounce it rises to a height of 6 m. From what height the ball was dropped and what is the coefficient of restitution between the glass and the floor. ***(MU Dec 16)***

P10. A smooth spherical ball A of mass 5 kg is moving in a horizontal plane from left to right with a velocity of 10 m/s. Another ball B of mass 6 kg traveling in a perpendicular direction with a velocity of 20 m/s collides with A in such a way that the line of impact is in the direction of motion of ball B. Assuming e = 0.7, determine the velocities of balls A and B after impact. ***(MU Dec 09)***

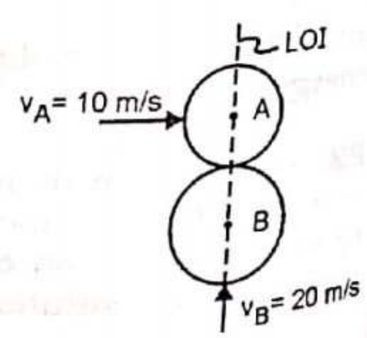

P11. The 9 kg ball moving down at 3m/sec strikes the 5.5kg ball moving at 2.5 m/sec as shown. The coefficient of restitution e = 0.8. Find the speeds v_1 and v_2 after the impact. ***(VJTI May 08)***

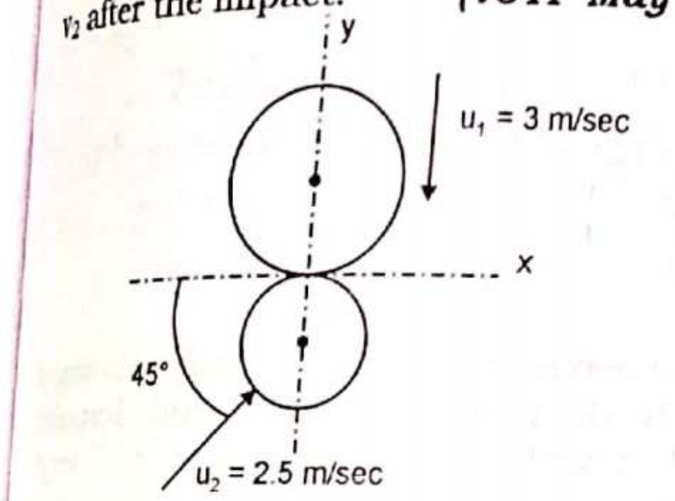

P12. Two identical spheres A and B approach each other with the velocities as shown. Determine the magnitude and direction of the velocity of each sphere after impact.
Take e = 0.7

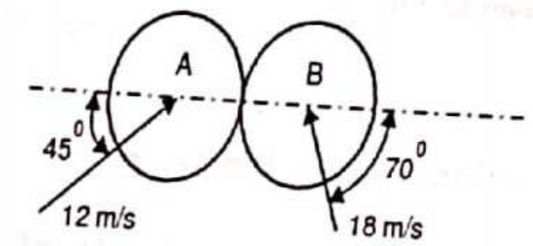

P13. Two smooth spheres A and B having a mass of 2 kg and 4 kg respectively collide with initial velocities as shown in figure. If the coefficient of restitution for the spheres is e = 0.8, determine the velocities of each sphere after collision. ***(MU May 08, KJS May 17)***

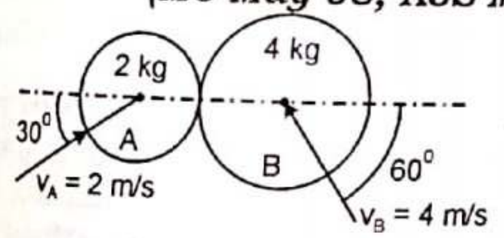

P14. *a) A bowler bowls a ball which strikes the ground at an angle of 60° with a speed of 20 m/s as shown. Find the velocity of the ball just after it strikes the ground. Assume smooth surfaces and e = 0.7 b) Find at what horizontal distance R, the ball hits the ground again.*

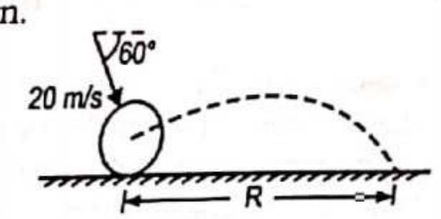

P15. A ball is thrown against a frictionless wall. Its velocity before striking the wall is shown.
If e = 0.8, find the velocity after impact.

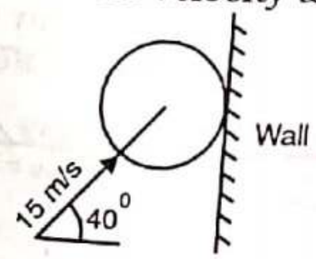

P16. *Two identical billiard balls collide with velocities as shown. Find the velocities of the balls after impact. Also find the percentage loss of kinetic energy. Take e = 0.9.*

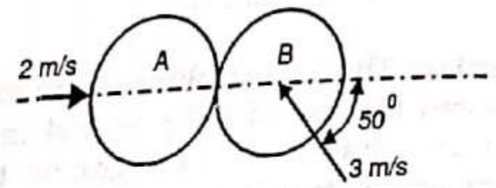

P17. Two smooth balls A (3 kg) and B (2 kg) strike with given velocities as shown. If e = 0.7 find the velocities of the balls after impact.

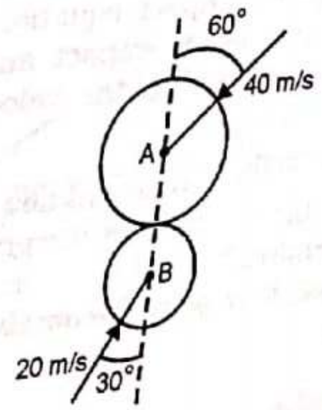

P18. Two smooth balls A (3 kg) and B (4 kg) are moving with velocities as shown before they collide. After collision ball A rebounds in a direction at 40° counterclockwise with the horizontal axis. Determine the coefficient of restitution between the balls.

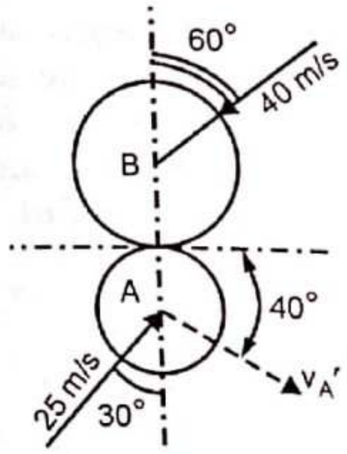

12.9 Combination Problems:

We have completed our study of the three different methods of solving kinetics of particles viz., Newton's Second Law, Work Energy Method and Impulse Momentum Method. We have also worked with the Conservation of Energy Principle and Conservation of Momentum Principle which were the offshoots of Work Energy Method and Impulse Momentum respectively. Problems on impact involving use of two equations viz, the Conservation of Momentum and Coefficient of Restitution Equations have been dealt with.

So far we have used these methods in isolation, since the problem requirement was being satisfied with one method only. However certain problems may need application of more than one method to solve them. Such problems are referred to as Combination Problems.

Combination Problems need to be first broken into parts, each part requiring the use of one of the methods at a time. While working with a particular part, the same procedure and equations are to be adopted as has been explained before. The value obtained from solving one part of the problem is used as a data for the next part and thus the entire Combination Problem is dealt with.

Ex. 12.14 A boy throws a ball vertically downwards from a height of 1.5m. He wants the ball to rebound from floor and just touch the ceiling of room which is at a height of 4m from ground. If coefficient of restitution e is 0.8, find the initial velocity with which the ball should be thrown. ***(MU Dec 10)***

Solution: This is a combination problem because it requires the use of MUG to find initial velocity of ball as it travels from the ground towards ceiling, then use of special direct impact equation to find the velocity of ball just before impact and finally once again use of MUG to find the velocity with which the ball was thrown.

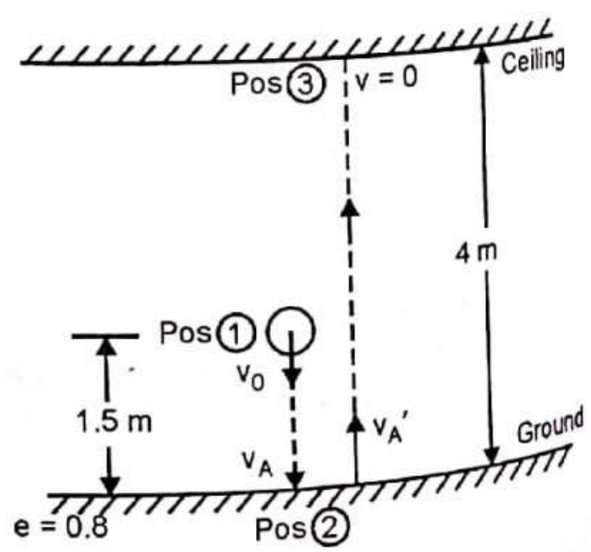

Let the ball be thrown with some unknown velocity v_0 from position (1). Let the ball hit the ground with velocity v_A and rebound with a velocity v_A' at position (2). The ball's velocity becomes zero as it reaches the ceiling.

Motion (2) – (3)

MUG ↑+ve

$u = v_A'$, $v = 0$, $s = 4m$, $a = -9.81$, $t = -$

Using $v^2 = u^2 + 2as$

$0 = (v_A')^2 + 2\times(-9.81)\times 4$

$\therefore$ $v_A' = 8.859$ m/s At position (2) it is a special direct impact.

$\therefore$ $v_A' = e \times v_A$

$8.859 = 0.8 \times v_A$ or $v_A = 11.074$ m/s

Motion (1) – (2)

MUG ↓+ve

$u = v_0$, $v = 11.074$ m/s, $s = 1.5$m, $a = 9.81$, $t = -$

Using $v^2 = u^2 + 2as$

$11.074^2 = v_0^2 + 2\times 9.81\times 1.5$

$\therefore$ $v_0 = 9.654$ m/s ..... **Ans.**

Ex. 12.15 A ball is thrown downwards with a velocity of 15 m/s at an angle of 20° with the horizontal from the top of a building 16 m high. Find where the ball strikes the ground on its second bounce from the foot of the building. Take e = 0.8.

Solution: This is a combination problem involving use of Projectile Motion, Special oblique impact and again Projectile Motion.

The ball projected from position (1) has its first bounce at position (2) on ground. The exaggerated view of impact at position (2) is shown. It is a case of oblique impact. Let v_A and v_A' be the velocities of the ball before and after impact. Resolving them along the n and t directions of impact.

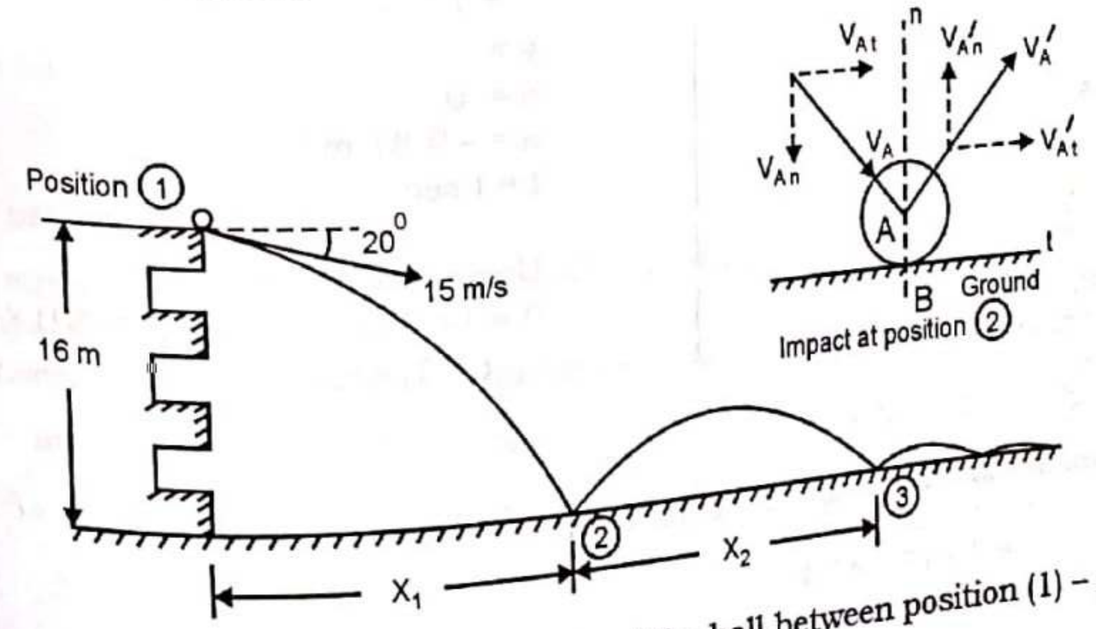

First we will work with the projectile motion of the ball between position (1) – (2)

Let x_1 be the horizontal range.

Projectile Motion (1) – (2)

Horizontal Motion

$v = 15 \cos 20 = 14.1$ m/s

$s = x_1$

$t = t$ sec

using $v = \frac{s}{t}$

$14.1 = \frac{x_1}{t}$ ..... (1)

Substituting t = 1.357 sec obtained from vertical motion

$\therefore x_1 = 19.13$ m

also since velocity remains constant in the horizontal direction

$v_{At} = 14.1$ m/s →

Vertical Motion ↓ + ve

$u = 15 \sin 20 = 5.13$ m/s

$v = v_{An}$

$s = 16$ m

$a = 9.81$ m/s²

$t = t$ sec

Using $s = ut + \frac{1}{2} at^2$

$16 = 5.13\,t + \frac{1}{2} \times 9.81 \times t^2$

$4.905\,t^2 + 5.13\,t - 16 = 0$

$\therefore \quad t = 1.357$ sec

Using $v = u + at$

$v_{An} = 5.13 + 9.81 \times 1.357$

$\therefore \quad v_{An} = 18.44$ m/s ↓

Analysing impact at position (2)

It is a special case of oblique impact, since the ball hits the ground, which is a body of infinite mass.

Having found $v_{At} = 14.1$ m/s →, $v_{An} = 18.44$ m/s ↓

Using relations of special case of oblique impact

$\therefore \quad v_{A'n} = e.\, v_{An} = 0.8 \times 18.44 = 14.752$ m/s ↑

and $\quad v_{A't} = v_{At} = 14.1$ m/s →

After impact at position (2), the ball rebounds and performs projectile motion. It lands again on the ground at position (3). Let x_2 be the horizontal range between position (2) and (3).

Projectile Motion (2) – (3)

Horizontal Motion

$v = 14.1$ m/s

$s = x_2$

$t = t$ sec

using $v = \frac{s}{t}$

$14.1 = \frac{x_2}{t}$

Substituting t = 3 sec obtained from vertical motion

$14.1 = \frac{x_2}{3} \quad \therefore \quad x_2 = 42.4$ m

Vertical Motion ↑ + ve

$u = 14.752$ m/s

$v = -$

$s = 0$

$a = -9.81$ m/s²

$t = t$ sec

Using $s = ut + \frac{1}{2} at^2$

$0 = 14.752 \times t + \frac{1}{2} \times (-9.81) \times t^2$

$\therefore \quad t = 3$ sec

Total horizontal distance from the foot of tower

$x = x_1 + x_2$

$= 19.13 + 42.4$

$= 61.53$ m ..... **Ans.**

Ex. 12.16 A sphere A of mass 2.5 kg is released from rest. It swings as a pendulum and strikes a block B of mass 2 kg resting on a horizontal surface as shown. Determine how far the block will move after the impact. Take $\mu = 0.3$ between the block B and the horizontal surface and e = 0.7

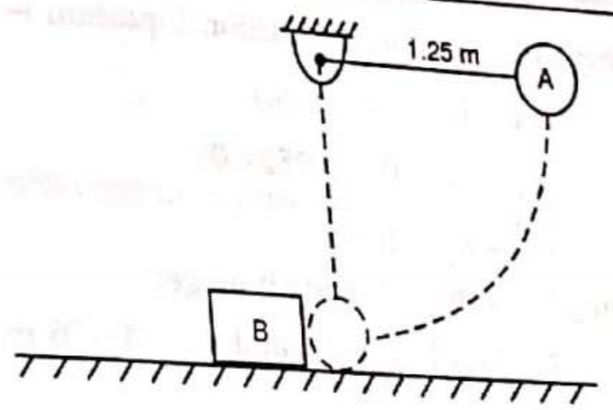

Solution: This is a combination problem because it requires use of WEP to find velocity of sphere A just before it strikes block B, then use of direct impact equations to find velocity of B just after impact and finally once again use of WEP to find distance moved by block B.

The sphere A starts from rest at position (1) and reaches position (2) with a certain velocity v.

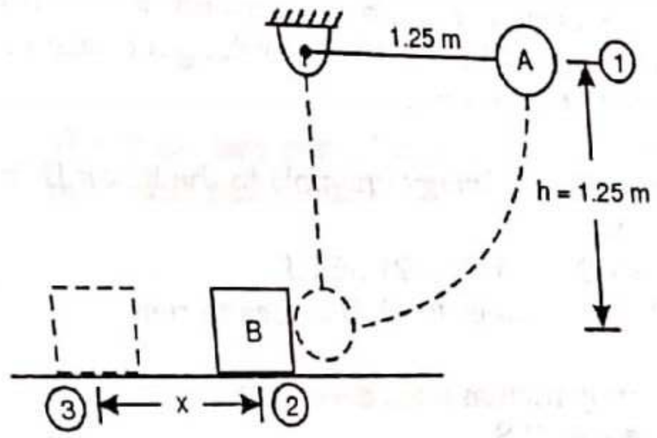

Applying Work Energy Principle to sphere A from position (1) to position (2)

$T_1 = 0$ since the ball starts from rest

$T_2 = \frac{1}{2} mv^2$

$= \frac{1}{2} \times 2.5 \times v^2 = 1.25\, v^2$ J

U_{1-2} only weight force does work

$= +\,m\,g\,h$ + ve since the displacement is downwards

$= +\,2.5 \times 9.81 \times 1.25$

$= 30.656$ J

Using $T_1 + \Sigma U_{1-2} = T_2$

$0 + 30.656 = 1.25\,v^2$

$\therefore \quad v = 4.952$ m/s ←

Impact at position (2)

Sphere A strikes the stationary block B with a velocity $v_A = 4.952$ m/s causing a direct central impact.

Using Conservation of Momentum Equation ← + ve

$m_A v_A + m_B v_B = m_A v_A' + m_B v_B'$

$2.5 \times 4.952 + 2 \times 0 = 2.5\,v_A' + 2\,v_B'$ ..... (1)

$2.5\,v_A' + 2\,v_B' = 12.38$

Using Coefficient of Restitution Equation ← + ve

$$v_B' - v_A' = e(v_A - v_B)$$

$$v_B' - v_A' = 0.7(4.952 - 0)$$

$$v_B' - v_A' = 3.466 \qquad \text{..... (2)}$$

Solving equations (1) and (2) we get

$$v_A' = 1.21 \text{ m/s} \leftarrow \text{ and } v_B' = 4.676 \text{ m/s} \leftarrow$$

Block B is now set into motion and starts moving from position (2) to the left with a velocity of 4.676 m/s. After travelling a distance x on the rough horizontal floor it comes to a halt at position (3).

Applying Work Energy Principle to the block B from position (2) to (3)

$T_2 = ½ mv^2$

$= ½ \times 2 \times 4.676^2 = 21.865$ J

$T_3 = 0$ ..... since block B comes to rest

U_{2-3} only friction force does work

$= -\mu_K.N.S$

$= -0.3 \times (2 \times 9.81) \times x$

$= -5.886\ x$ J

Using $T_2 + \Sigma U_{2-3} = T_3$

$21.865 + [-5.886\,x] = 0$

$\therefore \quad x = 3.714$ m ..... **Ans.**

Ex. 12.17 A 5 kg ball starts from rest at A and slides down a smooth frictionless tube. The ball leaves the tube at B and strikes a 3 kg pendulum C. Determine the maximum angle through which the pendulum will swing. Take e = 0.8

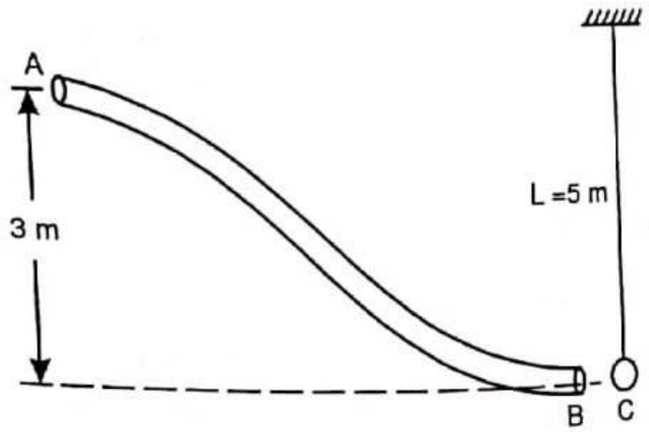

Solution: This is a combination problem involving use of WEP, Direct impact and again WEP.

The ball starts from rest at A i.e position (1) and travels to B i.e. position (2). We shall first find the ball's velocity at B

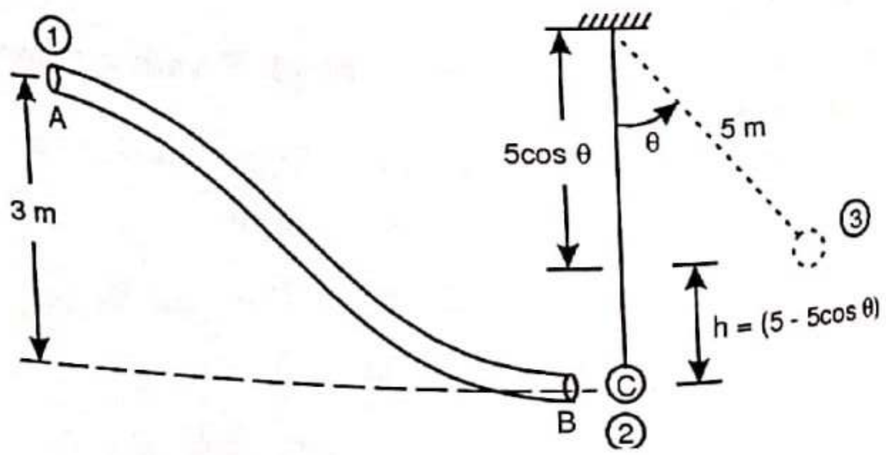

Applying Work Energy Principle from position (1) to (2) to the ball

$T_1 = 0$ since the ball starts from rest at A

$T_2 = ½ mv^2$

$= ½ \times 5 \times v^2 = 2.5\ v^2$ J

U_{1-2} only weight force does work

$= +mgh$ ..... + ve since the displacement is downwards

$= +5 \times 9.81 \times 3$

$= 147.15$ J

Using $T_1 + \Sigma U_{1-2} = T_2$

$0 + [147.15] = 2.5v^2$

$\therefore \quad v = 7.672$ m/s

Impact at position (2)

The ball A with a velocity $v_A = 7.672$ strikes the stationary pendulum C causing a direct central impact. Let us find the velocities of ball A and pendulum C after impact.

Using Conservation of Momentum Equation → + ve

$$m_A v_A + m_C v_C = m_A v_A' + m_C v_C'$$

$$5 \times 7.672 + 3 \times 0 = 5v_A' + 3v_C'$$

$$38.36 = 5v_A' + 3v_C' \qquad \text{..... (1)}$$

Using Coefficient of restitution Equation → + ve

$$v_C' - v_A' = e(v_A - v_C)$$

$$v_C' - v_A' = 0.8(7.672 - 0)$$

$$v_C' - v_A' = 6.137 \qquad \text{..... (2)}$$

Solving equations (1) and (2) we get

$$v_A' = 2.493 \text{ m/s} \rightarrow \text{ and } v_C' = 8.63 \text{ m/s} \rightarrow$$

The pendulum C now starts from position (2) with a velocity of 8.63 m/s and swings to position (3) covering an angular displacement of angle θ.

Applying Work Energy Principle to pendulum C from position (2) to (3)

$T_2 = ½ mv^2 = ½ \times 3 \times 8.63^2 = 111.7$ J

$T_3 = 0$ ..... At maximum angle θ, velocity becomes zero

U_{2-3} only weight force does work

$= -mgh$ ..... – ve because displacement is upwards

$= -3 \times 9.81 \times (5 - 5\cos\theta)$

$= -147.15 - 147.15\cos\theta$

Using $T_2 + \Sigma U_{2-3} = T_3$

$111.7 + [-147.15 - 147.15\cos\theta] = 0$

$\therefore \quad \theta = 76.06°$ ..... **Ans.**

Ex. 12.18 A roller coaster rolls freely without friction along a looping rail as shown. Find the minimum height h necessary, so that the coaster released from A should not loose contact with the rails at B, while negotiating the vertical loop of radius 7.5 m.

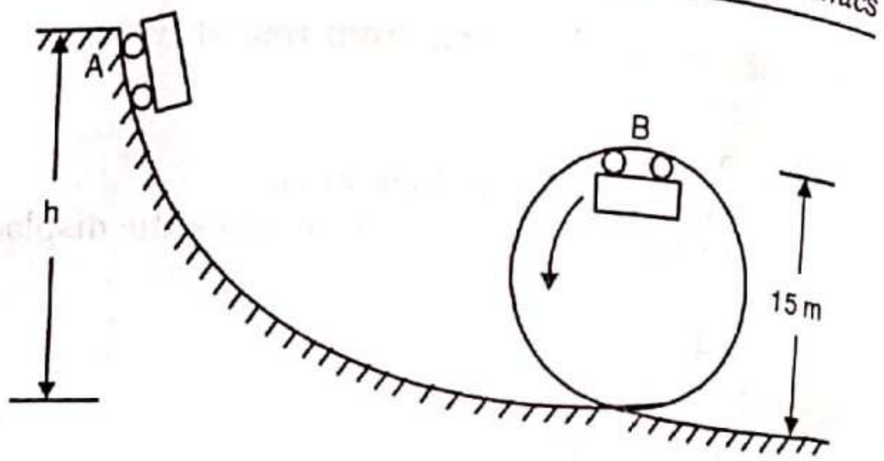

Solution: This is a Combination Problem involving use of equations of Newton's Second Law and Work Energy Principle.

Applying Newton's Second Law when the coaster is at the topmost point of the loop. For it not to loose contact, the normal reaction N should be ≥ 0. Taking N = 0

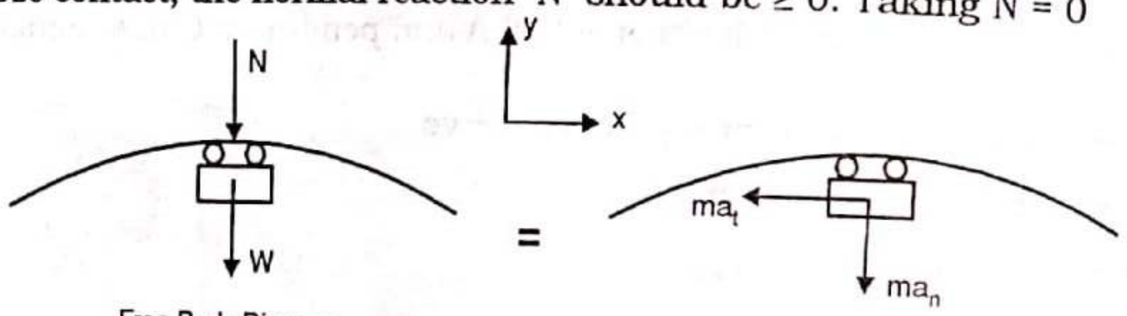

$\Sigma F_y = m\,a_y$

$-N - W = -m\,a_n$

$-W = -m\,a_n \quad (\because N = 0)$

$$m \times 9.81 = m \times \frac{v^2}{7.5} \quad \ldots\ldots\ldots\ldots \left(\because \quad a_n = \frac{v^2}{\rho}\right)$$

$\therefore \; v = 8.578$ m/s

Applying equation of Work Energy Principle from the start of motion at A i.e. position (1) to B, the topmost point on the loop i.e. position (2)

$T_1 = ½\, mv^2 = 0 \qquad \because v = 0$ at the start

$T_2 = ½\, mv^2 = ½\, m \times (8.578)^2 = 36.788 \times m$ J

$U_{1\text{-}2}$ = by weight

$= m\,g\,h$

$= m \times 9.81 \times (h - 15)$ J

Using $\quad T_1 + \Sigma U_{1\text{-}2} = T_2$

$0 + m \times 9.81 \times (h - 15) = 36.788 \times m$

$\therefore \quad h = 18.75$ metres ..... **Ans.**

Ex. 12.19 A pile driving hammer of mass 300 kg falls through a height of 4 m on a pile of 500 kg mass. If it drives the pile 0.8 m into the ground, find the average resistance of the ground to penetration. Take perfectly plastic impact between hammer and pile.

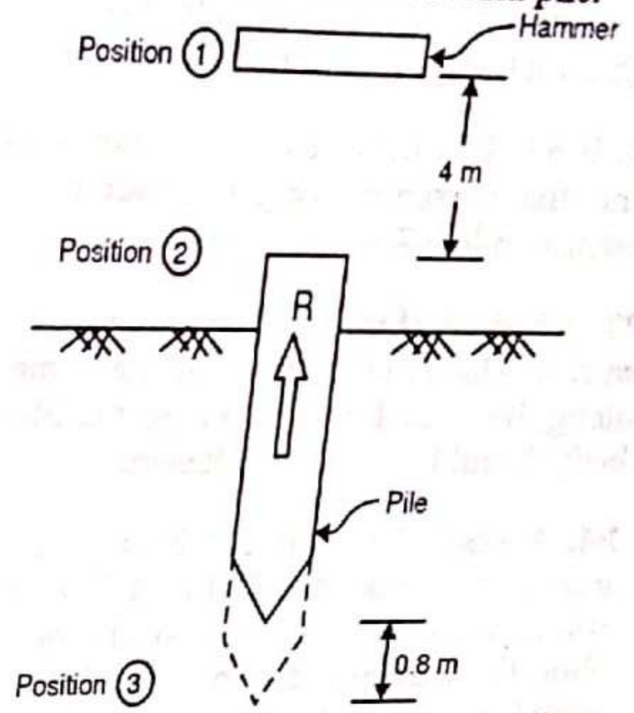

Solution: This is a Combination Problem wherein equations of Direct Central Impact and equation of Work Energy Principle will be applied .

Let us first find the velocity of the hammer just before it strikes the pile.

Applying M.U.G. ↓ + ve to the hammer between position (1) and (2).

$u = 0, v = ?, s = 4$ m, $a = 9.81$ m/s²

using $\quad v^2 = u^2 + 2as$

$v^2 = 0 + 2 \times 9.81 \times 4$

$\therefore \quad v = 8.859$ m/s ..... Velocity of the hammer just before it strikes the pile.

Working with impact between the hammer and pile at position (2)

It is a case of direct plastic impact. Let v' be the common velocity after impact.

Using Conservation of Momentum Equation

$$m_A v_A + m_B v_B = m_A v_A' + m_B v_B'$$

$$300 \times 8.859 + 500 \times 0 = 300 \times v' + 500 \times v'$$

$\therefore \quad v' = 3.322$ m/s ..... Common velocity of the pile and the hammer after impact

With the common velocity the pile and hammer start moving downward and travel 0.8 m before coming to rest. Let R be the average ground resistance.

Applying Work Energy Principle from position (2) to position (3)

$T_2 = ½\,(300 + 500)\,(3.322)^2 = 4414.6$ J

$T_3 = 0$

U_{2-3} 1) by weight force

$= m\,g\,h = +\,(300 + 500)\,9.81 \times 0.8 = 6278.4$ J

(+ ve sign because displacement is downwards)

2) by resistance force R

$= F \times s = -R \times 0.8$

[– ve sign because force R acts opposite to the displacement]

Using $\quad T_2 + \Sigma U_{2\text{-}3} = T_3$

$4414.6 + [6278.4 - 0.8\,R] = 0$

$\therefore \quad R = 13366$ N ..... **Ans.**

Exercise 12.3

P1. A ball is thrown vertically downwards with a velocity v_O from a height of 1.2 m so that it hits the ground and just touches the ceiling after impact. If the ceiling is 4 m high from the ground find v_O. Take e = 0.75.

P2. If a ball is thrown vertically down with a velocity of 10 m/s from a height of 3 m. Find the maximum height it can reach after hitting the floor, if the coefficient of restitution is 0.7 ***(MU Dec 14)***

P3. A body A of mass 2 kg is projected upwards from the surface of the ground at t = 0 with a velocity of 20 m/s. At the same time another body B of mass 2 kg is dropped along the same line from a height of 25 m. If they collide elastically, find the velocities of body A and B just after collision. ***(M. U. Dec 12, KJS May 15)***

P4. A shell of weight 200 N is fired from a gun with a velocity of 350 m/s. The gun and its carriage have a total weight of 12 kN. Find the stiffness of each of the three springs which is required to bring the gun to a halt within 300 mm of the spring compression. ***(VJTI Dec 14)***

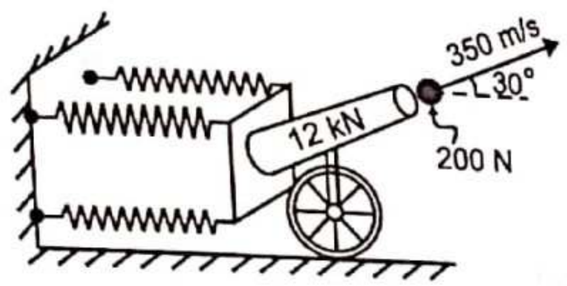

P5. A sphere tied to a string of length L is released from rest from the horizontal position at A. The sphere swings as a pendulum and strikes a vertical wall at B. If e = 0.7, find the angle θ defining its total rebound.

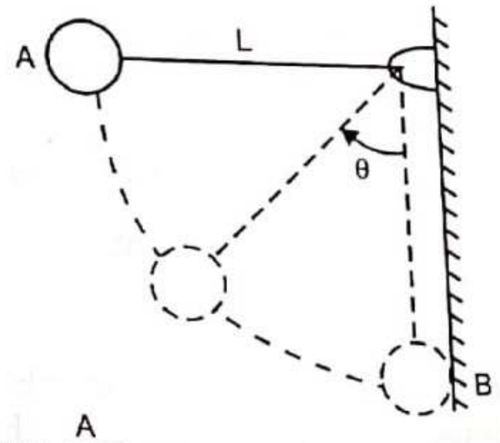

P6. A ball of 200 gm mass is propelled from A by a spring mechanism. The ball falls on a smooth floor and after rebounding at B falls in the cup at C. Determine the location x of the cup. The spring is initially compressed 100 mm. Take k = 3000 N/m and e = 0.75

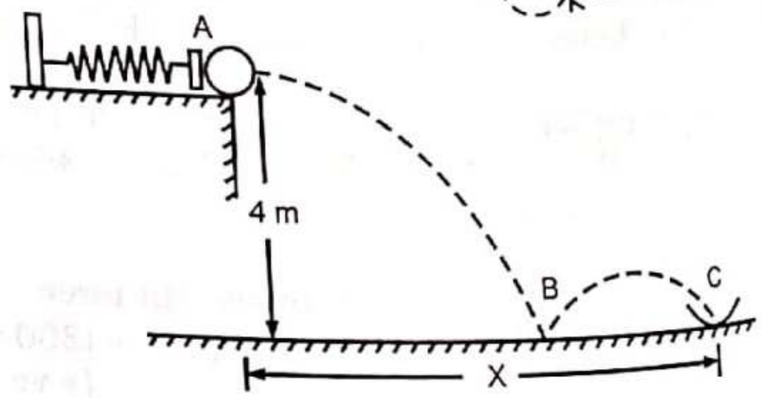

P7. Block A of mass 1.125 kg is released from rest in the position shown and slides without friction until it strikes the ball B of mass 1.8 kg of a simple pendulum. Knowing that coefficient of restitution between A and B is 0.9, determine

a) the velocity of B immediately after impact

b) the maximum angular displacement of the pendulum. ***(MU Dec 08)***

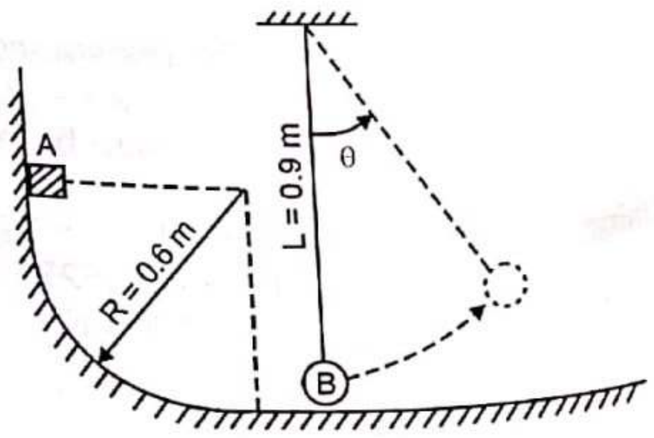

P8. A 3 kg sphere is released from rest and strikes a 5 kg block kept on a horizontal floor. If e = 0.7 between the block and sphere and μ_k = 0.3 between the block and ground, determine (a) the distance traveled by the block before it comes to rest.

(b) the tension in the cable just after impact.

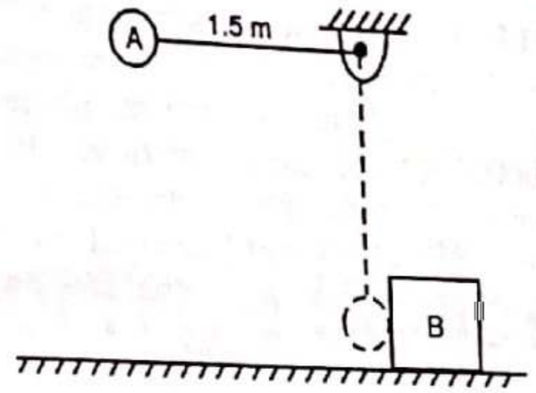

P9. A 2 kg sphere A is released from rest when θ_A = 50° and strikes a 4 kg sphere B which is at rest. If e = 0.8 between the two spheres, determine the values of θ_A and θ_B corresponding to the highest position to which the spheres will rise after impact. Take length of both the pendulums to be 1 m.

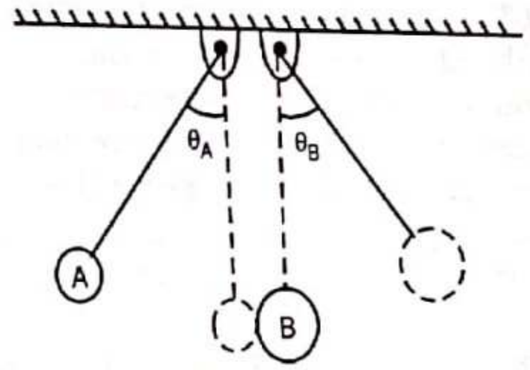

P10. A small steel ball is to be projected horizontally such that it bounces twice on the surface and lands into a cup placed at a distance of 8m as shown. If the coefficient of restitution for each impact is 0.8, determine the velocity of projection 'u' of the ball. ***(MU Dec 10)***

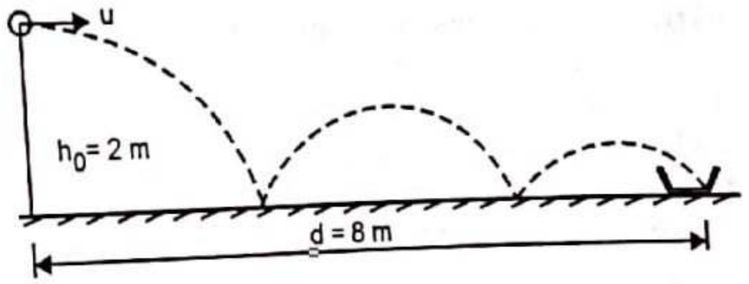

P11. A pile of 400 kg mass is being driven into ground with the help of a hammer of mass 1000 kg. Hammer falls through a constant height of 2.5 m. Assuming plastic impact between hammer and pile, find the number of blows required to drive the pile by 1 m when the resistance offered by the ground to penetration is 300 kN. ***(MU May 11)***

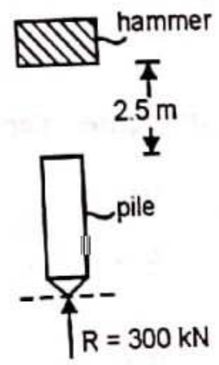

P12. a) A pile hammer, weighing 15 kN drops from height of 600 mm on a pile of 7.5 kN. How deep does a single blow of hammer drive the pile if the resistance of the ground to pile is 140 kN? (Assume plastic impact and the ground resistance is constant) ***(VJTI Nov 10)***

b) How many blows are required to drive the pile 1 m in the ground.

P13. A bullet of mass 30 gm moving horizontally with 400 m/s strikes a 2 kg wooden block suspended by a string 2.5 m long. To what maximum angle with vertical will the block and embedded bullet swing.

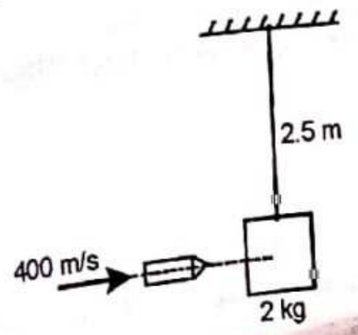

P14. A particle of mass 'm' starts from rest at A and slides down a smooth track ABCD held in a vertical plane. What should be the minimum height h so that the particle completes its journey on the track ABCD without falling off the track at C. ***(NMIMS May 09)***

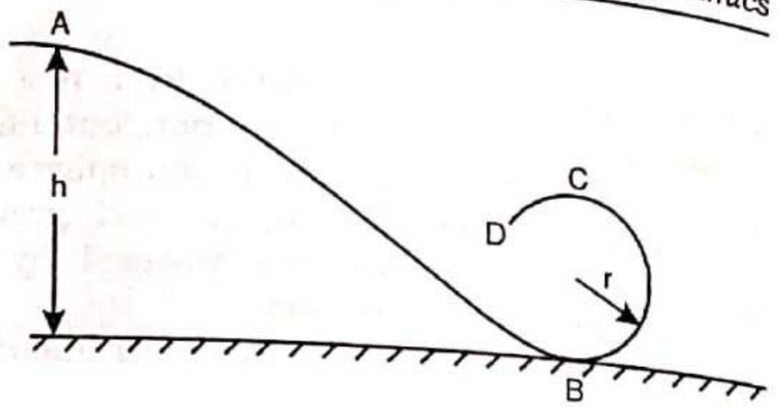

P15. A ball slides down on a smooth inclined surface and strikes the ground at B. Determine the magnitude of velocity and direction of the ball after impact. Take e = 0.6

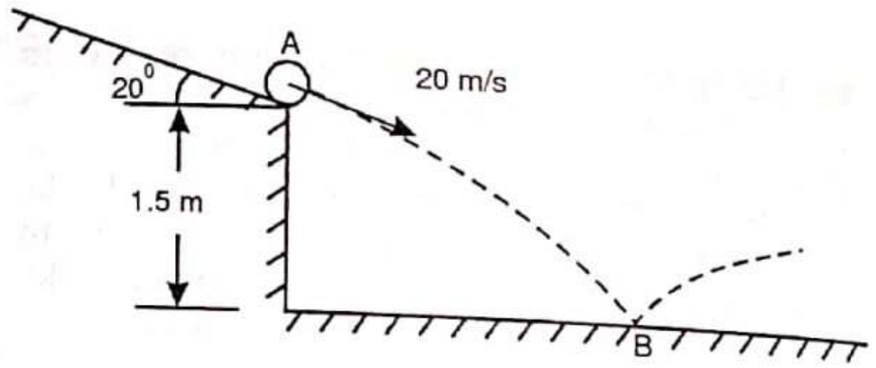

P16. Two particles A (3 kg) and B (2 kg) are initially at rest 10 m apart on a 25° inclined plane. Particle B being ahead of A. If μ_k between A and incline is 0.15 and between B and incline is 0.25, determine the time taken and distance traveled by the two particles before they collide.
If e = 0.75 find their velocities after collision.

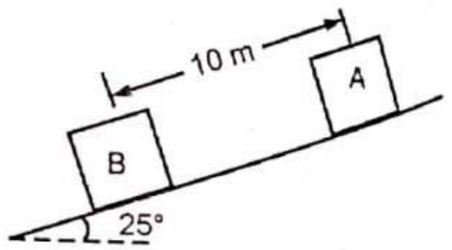

Exercise 12.4

Theory Questions

Q1. What is impulse and momentum. Explain its principle? ***(VJTI Nov 09, Dec 11)***

Q2. State and derive the Impulse Momentum Equation. ***(VJTI May 2008, MU Dec 08)***

Q3. State the Law of Conservation of Momentum Principle. ***(MU Dec10, VJTI Nov15)***

Q4. What do you mean by impact, impulse and coefficient of restitution? ***(VJTI May 09)***

Q5. Write a short note on- Different types of impact and their characteristics.
OR List the types of collisions. ***(VJTI May 10, MU Dec 11, NMIMS July 16)***

Q6. Write a short note on Coefficient of Restitution. ***(MU Dec 07, VJTI May 10)***

★ ★ ★

Chapter 13
Kinematics of Rigid Bodies

13.1 Introduction

In this chapter we will do motion analysis of rigid bodies without involving the forces responsible for the motion. We will learn to find the position, velocity and acceleration of the different particles which together form a rigid body.

In kinematics of particles the size or dimensions of the body were not taken into consideration during motion analysis, since we treated the entire body irrespective of its size (as large as a car, lift, train or airplane) as one single particle. In rigid body kinematics, we shall involve the size and dimensions of the body also. Therefore now the body would be considered as made up of several particles, connected to each other, such that their relative positions do not change, as the body performs its motion.

There are various types of rigid body motion. We will begin with first classifying them and then we will study each type in detail and thereby develop our base for study of kinetics of rigid bodies.

13.2 Types of Rigid Body Motion

The motion of the rigid body can be classified under the following types,

1) Translation
2) Rotation about fixed axis
3) General plane motion
4) Motion about a fixed point
5) General motion

13.3 Translation Motion

In this type of motion all the particles forming the body travel along parallel paths. Also the orientation of the body does not change during motion. Translation motion is further classified as

a) Rectilinear Translation
b) Curvilinear Translation

13.3.1 *Rectilinear Translation*

In this type of translation motion, all the particles travel along straight parallel paths.

Consider the motion of a body from position (1) to position (2).

Here we note two things, firstly a straight line joining particles P and Q in position (1) maintains the same direction in position (2). This indicates that the orientation of the body remains the same throughout the motion. The second thing which is special to rectilinear translation motion, is that the path described by the various particles, such as P and Q in our example, are parallel and they are straight.

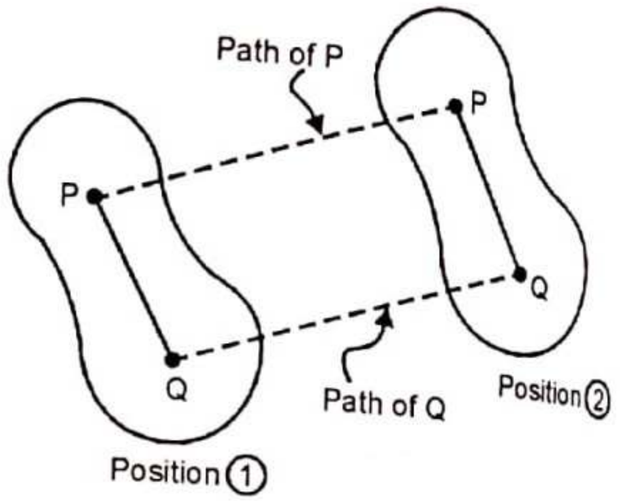

Fig. 13.1

Examples of rectilinear translation motion are,
a) A piston which travels in the fixed slot.
b) Motion of train on a straight track.
c) Motion of lift etc.

13.3.2 Curvilinear Translation

In this type of translation motion, all the particles travel along curved parallel paths. Consider the motion of a body from position (1) to position (2).

Here we note that the line joining particles P and Q in position (1) has the same orientation in position (2). This is indicative of translation motion of the body. Further the path described by all the particles, such as P and Q in our example, are parallel and they are curved. This indicates curvilinear translation motion.

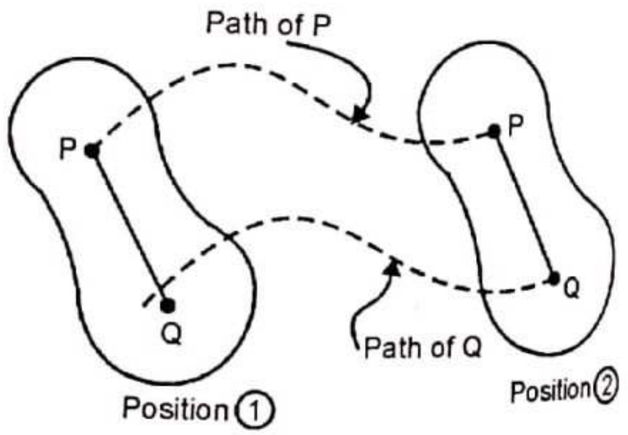

Fig. 13.2

At a given instant, for a translation motion, both rectilinear and curvilinear, all the particles of the body have same velocity and same acceleration.

i.e.

$$v_P = v_Q \qquad \text{..... [13.1 (a)]}$$

and

$$a_P = a_Q \qquad \text{..... [13.1 (b)]}$$

13.4 Rotation about Fixed Axis

In this motion all the particles forming the body travel along circular paths of different radii, around a common centre. This common point is known as *centre of rotation*. An axis perpendicular to the plane of the body and passing through the centre of rotation is known as the *axis of rotation*. Since the axis of rotation remains stationary or fixed, we call such motion as Rotation about Fixed Axis.

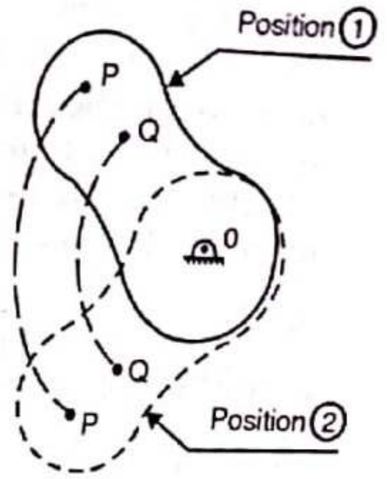

Fig. 13.3

13.4.1 Important Terms

i) Angular Position

Let O be the centre of rotation and z axis be the fixed axis of rotation. Let the x axis be the reference axis with respect to which we measure the position of the rotating body. Let us mark an arbitrary point P on the body.

The angle θ measured in the anticlockwise direction which the line OP makes with the x axis would then be the angular position of the particle.

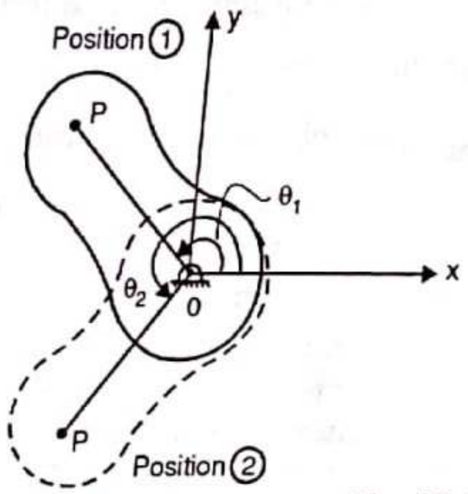

Fig. 13.4

As the body rotates and occupies position (2), the angular position of the body also changes and would have a new value of θ. Angular position is measured in units of radians (rad). It may also be measured in units of revolution or degree. These are related as

$$\textbf{1 revolution} = 2\pi \text{ rad} = 360^\circ$$

For example if the body's initial angular position is 30° = 0.5236 rad and it completes two revolutions, its new angular position would be, 750° = 13.09 rad.

ii) Angular Displacement

The change in angular position of the body during its motion is known as the angular displacement of the body.

If θ_1, is the angular position of the body in position (1) and if this changes to θ_2 at position (2), the angular displacement of the body is

$$\Delta\theta = \theta_2 - \theta_1$$

iii) Angular Velocity

The rate of change of angular position with respect to time is the angular velocity of the rotating body.

$$\omega = \frac{d\theta}{dt} \qquad \text{..... [13.2]}$$

The magnitude of angular velocity is denoted by notation ω (omega) and its direction acts along the axis of rotation, the sense being defined by right hand rule. i.e. for a body in the x–y plane rotating about a fixed axis parallel to the z axis in the anticlockwise direction, will have positive angular velocity. The same body, if it rotates in the clockwise direction will have negative angular velocity. Angular velocity is represented by curved arrow representing clockwise or anticlockwise sense.

Units of angular velocity are rad/s, though other unit like revolutions per minute (rpm) is also commonly used. They are related as

$$1 \text{ rpm} = \frac{2\pi}{60} \text{ rad/s}$$

iv) Angular Acceleration

The rate of change of angular velocity with respect to time is the angular acceleration of the rotating body.

$$\alpha = \frac{d\omega}{dt} \qquad \text{..... [13.3]}$$

The magnitude of angular acceleration is denoted by notation α (alpha) and its direction acts along the axis of rotation. The sense of angular acceleration is same as the sense of angular velocity, if the angular velocity increases with time, and is opposite to the sense of angular velocity, if the angular velocity decreases with time. Angular acceleration is represented by curved arrow, representing clockwise or anticlockwise sense.

Units of angular acceleration are rad/s^2.

13.4.2 *Types of Rotation Motion about Fixed Axis*

Rotation about fixed axis can be classified under three categories,

1) Uniform Angular Velocity Motion

In this case of rotation motion the angular velocity of the rotating body remains constant during motion. For such motions, we use a simple relation relating ω, θ and t as

$$\omega = \frac{\theta}{t} \qquad \text{..... [13.4]}$$

2) Uniform Angular Acceleration Motion

In this case of rotation motion, the angular velocity of the rotating body is not constant, but increases or decreases at a constant rate.

If ω_0 = initial angular velocity
ω = final angular velocity
α = angular acceleration
θ = angular displacement of the body
t = time interval, then

we relate ω_0, ω, α, θ and t as

$$\omega = \omega_0 + \alpha t \qquad \text{..... [13.5 (a)]}$$

$$\theta = \omega_0 t + \tfrac{1}{2}\alpha t^2 \qquad \text{..... [13.5 (b)]}$$

$$\omega^2 = \omega_0^2 + 2\alpha\theta \qquad \text{..... [13.5 (c)]}$$

3) Variable Angular Acceleration Motion

In this case of rotation motion the angular velocity changes during motion and the rate of change of angular velocity is variable.
To solve problems on variable angular acceleration motion we make use of the basic differential equations discussed earlier.

$$\omega = \frac{d\theta}{dt} \qquad \text{..... [13.2]}$$

$$\alpha = \frac{d\omega}{dt} \qquad \text{..... [13.3]}$$

From equations 13.2 and 13.3, we have

$$\alpha = \frac{\omega\, d\omega}{d\theta} \qquad \text{..... [13.6]}$$

13.4.3 *Relation between Linear Velocity and Angular Velocity*

Consider a body rotating about a fixed axis passing through O.
Let at the given instant, the angular velocity of the body be ω rad/s anticlockwise.

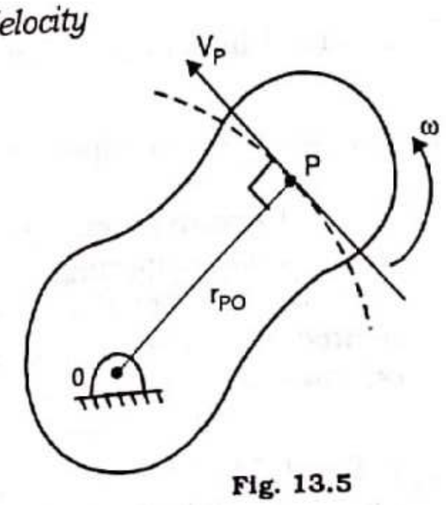

Fig. 13.5

All the particles on the rotating body will have the same angular velocity but different linear velocity. If v_P is the linear velocity of a particle P and also r_{PO} is the radial distance from P to O, then

$$v_P = r_{PO} \times \omega$$

The sense of v_P would be consistent with the direction of ω.

In general linear velocity v of any particle located at a radial distance r from the axis of rotation O is related to the angular velocity ω of the body by a relation

$$v = r\,\omega \qquad \text{..... [13.7]}$$

13.4.4 Relation between Linear Acceleration and Angular Acceleration

Consider a body rotating about a fixed axis passing through O, having an angular velocity ω and angular acceleration α, at the given instant as shown.

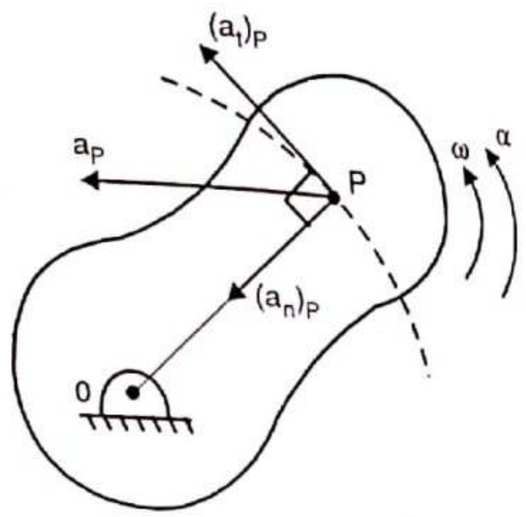

Fig. 13.6

We have studied in Chapter 9 that a particle in curvilinear motion, has acceleration 'a' which can be resolved into normal component a_n and tangential component a_t. Similarly if a_P is the acceleration of particle P and if $(a_n)_P$ and $(a_t)_P$ are its components, then

$$(a_n)_P = \frac{v^2}{\rho} = \frac{(r_{PO} \times \omega)^2}{r_{PO}}$$

$$\therefore \quad (a_n)_P = r_{PO} \times \omega^2$$

also $$(a_t)_P = \frac{dv}{dt} = \frac{d(r_{PO} \times \omega)}{dt} = r_{PO}\frac{d\omega}{dt} \quad \therefore \quad (a_t)_P = r_{PO}\,\alpha$$

In general the linear acceleration a of any particle located at a radial distance r from the axis of rotation O, has its components related to angular velocity and angular acceleration by the relation

$$a_n = r.\omega^2 \qquad \text{..... [13.8 (a)]}$$

$$a_t = r.\alpha \qquad \text{..... [13.8 (b)]}$$

also total linear acceleration $a = \sqrt{a_n^2 + a_t^2}$

13.4.5 Special case 1 of rotation motion: A block connected to a rotating pulley

Consider a pulley of radius r, hinged at the centre and supporting a block by a string wound over it. The rotational motion of the pulley is related to translation motion of the block. This relation can be worked out.

Let at a given instant, the pulley have an angular position of θ rad, angular velocity of ω rad/s and angular acceleration of α rad/s^2

Let x_A, v_A and a_A be the corresponding position, velocity and acceleration respectively of the block A at this instant.

Since the block translates, the string connecting it also translates. We find point P on the pulley is common to the rotating pulley and the translating block

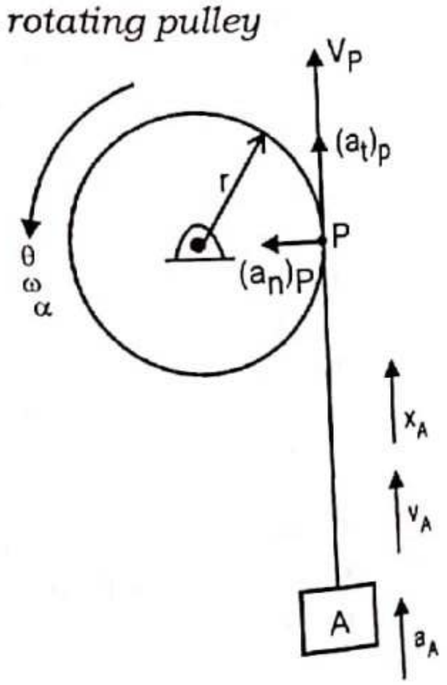

Fig. 13.7

Refer figure 13.7. If point P belongs to the pulley, its position, linear velocity and tangential acceleration is given by

$s_P = r\,\theta$ and $v_P = r\,\omega$ and $(a_t)_P = r\,\alpha$

Relating these parameters to the motion of the connected block, we have

$x_A = s_P \quad \therefore \quad x_A = r\,\theta$ ..... [13.9 (a)]

$v_A = v_P \quad \therefore \quad v_A = r\,\omega$ ..... [13.9 (b)]

and $a_A = (a_t)_P \quad \therefore \quad a_A = r\,\alpha$ ..... [13.9 (c)]

Equations 13.9 (a), (b) and (c) relate the motion of a block hanging from a rotating pulley.

13.4.6 Special case 2 of rotation motion: A pulley coupled to another pulley and they rotate without slip

Consider a pulley A of radius r_A, be coupled to another pulley B of radius r_B, and the two rotate without slip. The rotational motion of pulley A is related to the rotational motion of pulley B. This relation can be worked out. Let at a given instant, pulley A have an angular position of θ_A rad, angular velocity of ω_A rad/s and angular acceleration of α_A rad/s^2.

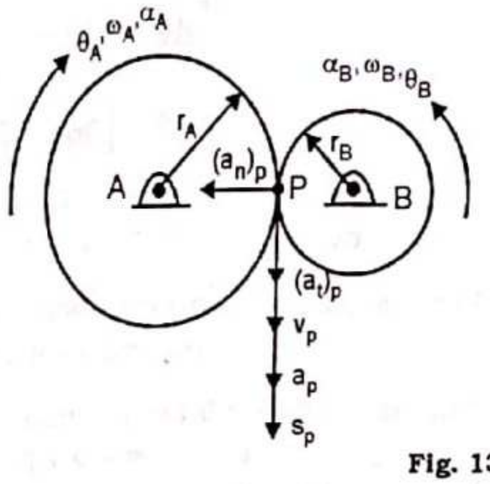

Fig. 13.8

Let θ_B, ω_B and α_B be the corresponding angular position, angular velocity and angular acceleration of pulley B at this instant.

Since the pulley A rotates, it causes pulley B to also rotate. We find point P is a common point to the two pulleys.

If point P belongs to pulley A, its position, linear velocity and tangential acceleration is given by

$s_P = r_A\,\theta_A$ and $v_P = r_A\,\omega_A$ and $(a_t)_P = r_A\,\alpha_A$

Similarly point P also belongs to pulley B, therefore if the above parameters are related to the pulley B, we have

$$s_P = r_A\,\theta_A = r_B\,\theta_B \qquad \text{..... [13.10 (a)]}$$

$$v_P = r_A\,\omega_A = r_B\,\omega_B \qquad \text{..... [13.10 (b)]}$$

$$(a_t)_P = r_A\,\alpha_A = r_B\,\alpha_B \qquad \text{..... [13.10 (c)]}$$

Equations 13.10 (a), (b) and (c) relate the motions of two pulleys or gears engaged with one another.

Ex. 13.1 A wheel has an angular acceleration given by the relation $\alpha = 36 - 4\,t$ rad/s². If $\omega = 4$ rad/s at $t = 0$, find

a) the maximum angular velocity and the corresponding time.
b) the total time taken for it to come to rest.
c) the total number of revolutions executed by the wheel.

Solution: a) The wheel performs variable angular acceleration motion. The acceleration of the rotating wheel is given by

$$\alpha = 36 - 4\,t \quad \text{rad/s}^2 \qquad \text{..... (1)}$$

Using $\alpha = \dfrac{d\omega}{dt}$

$$d\omega = \alpha\, dt$$

$$\therefore \quad d\omega = 36 - 4t\, dt$$

Integrating taking lower limits as $\omega = 4$ rad/s and $t = 0$

$$\int_4^{\omega} d\omega = \int_0^{t} 36 - 4t\, dt$$

$$[\omega]_4^{\omega} = \left[36t - 2t^2\right]_0^t$$

$$\omega - 4 = 36\,t - 2\,t^2$$

or $$\omega = -2\,t^2 + 36\,t + 4 \qquad \text{..... (2)}$$

For maximum angular velocity condition put $\alpha = 0$

$$\therefore \quad \alpha = 36 - 4\,t = 0 \quad \text{or} \quad t = 9 \text{ sec} \qquad \text{..... Ans.}$$

Substituting $t = 9$ sec in equation (2)

$$\omega_{max} = -2 \times (9)^2 + 36\,(9) + 4 = 166 \text{ rad/s} \qquad \text{..... Ans.}$$

b) When the wheel comes to a halt, $\omega = 0$

$$\therefore \quad \omega = -2\,t^2 + 36\,t + 4 = 0$$

Solving the quadratic and taking +ve value of t, we get $t = 18.11$ sec ..... **Ans.**

c) From equation (2), we get

$$\omega = -2\,t^2 + 36\,t + 4$$

using $$\omega = \frac{d\theta}{dt}$$

$$d\theta = \omega\, dt$$

$$\therefore \quad d\theta = (-2\,t^2 + 36\,t + 4)\, dt$$

Integrating taking lower limits as $\theta = 0$ and $t = 0$

$$\int_0^{\theta} d\theta = \int_0^{t} -2t^2 + 36t + 4\, dt$$

$$\theta = \frac{-2}{3}t^3 + 18t^2 + 4t$$

Knowing the wheel comes to a halt at $t = 18.11$ sec

$$\therefore \quad \theta = \frac{-2}{3}(18.11)^3 + 18 \times (18.11)^2 + 4 \times 18.11$$

$$\theta = 2016.2 \text{ rad} \quad \text{or} \quad \text{Revolutions } N = 320.9 \qquad \text{..... Ans.}$$

Ex. 13.2 Figure shows a hoisting gear arrangement. If gear A has an initial angular velocity of 5 rad/sec clockwise and a constant angular acceleration of 2 rad/sec². Find the velocity, acceleration and displacement of the load C in $t = 4$ sec.

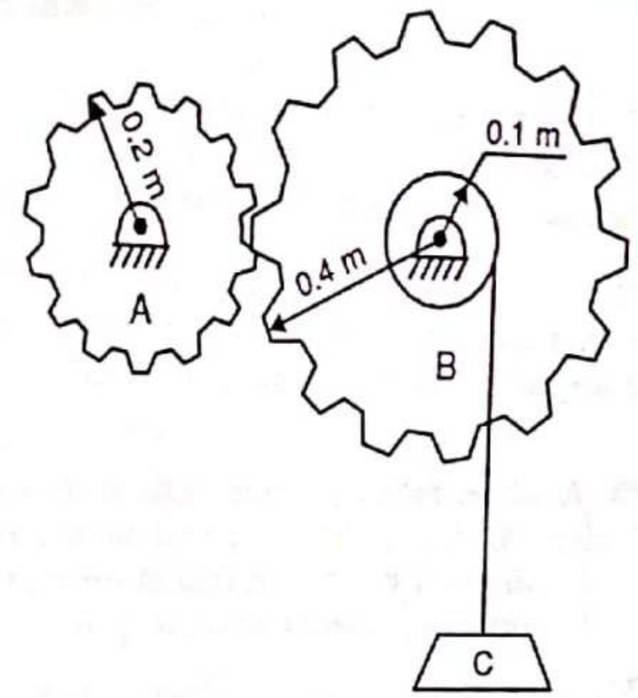

Solution: The system consists of three bodies in motion. Gear A and gear B perform rotation motion, while the load C translates vertically up.

Motion of gear A

It performs rotation motion with uniform angular acceleration

$\omega_0 = 5$ rad/s, $\omega = ?$, $\alpha = 2$ rad/s², $\theta = ?$, $t = 4$ sec.

Using $$\omega = \omega_0 + \alpha\, t$$

$$\omega = 5 + 2 \times 4 = 13 \text{ rad/sec}$$

Using $$\theta = \omega_0\, t + \tfrac{1}{2}\alpha\, t^2$$

$$\theta = 5 \times 4 + \tfrac{1}{2} \times 2 \times (4)^2 = 36 \text{ rad}$$

i.e at $t = 4$ sec, $\alpha_A = 2$ rad/sec², $\omega_A = 13$ rad/s and $\theta_A = 36$ rad

Motion of gear B

It also performs rotation motion with uniform angular acceleration

Gear B is coupled to gear A .....(*similar to special case 2 of rotation motion*)

$$\therefore \quad r_A\, \omega_A = r_B\, \omega_B$$

$$0.2 \times 13 = 0.4 \times \omega_B \quad \text{or} \quad \omega_B = 6.5 \text{ rad/s}$$

also $$r_A\, \alpha_A = r_B\, \alpha_B$$

$$0.2 \times 2 = 0.4 \times \alpha_B \quad \text{or} \quad \alpha_B = 1 \text{ rad/s}^2,$$

also $$r_A\, \theta_A = r_B\, \theta_B$$

$$0.2 \times 36 = 0.4 \times \theta_B \quad \text{or} \quad \theta_B = 18 \text{ rad}$$

$\therefore$ at $t = 4$ sec, $\alpha_B = 1$ rad/s². $\omega_B = 6.5$ rad/s and $\theta_B = 18$ rad

Motion of load C

It performs rectilinear translation motion. Since gear B has uniform angular acceleration, the load also performs uniform acceleration rectilinear translation motion.

Load C is coupled to gear B (*similar to special case 1 of rotation motion*)

$$v_C = r\, \omega_B = 0.1 \times 6.5 = 0.65 \text{ m/s} \qquad \text{..... Ans.}$$

$$a_C = r\, \alpha_B = 0.1 \times 1 = 0.1 \text{ m/s}^2 \qquad \text{..... Ans.}$$

$$s_C = r\, \theta_B = 0.1 \times 18 = 1.8 \text{ m} \qquad \text{..... Ans.}$$

Exercise 13.1

P1. The tub of a washing machine is rotating at 60 rad/sec when the power is switched off. The tub makes 49 revolutions before coming to rest. Determine the constant angular deceleration of the tub and the time it takes to come to a halt.

P2. A flywheel has an initial clockwise velocity 8 rad/sec and a constant angular acceleration of 2 rad/s². Determine the number of revolutions the wheel must undergo to acquire a clockwise angular velocity of 15 rad/s. What time is required?

(NMIMS July 16)

P3. A wheel rotating about a fixed axis at 15 rpm is uniformly accelerated for 60 sec during which it makes 30 revolutions. Find

a) angular velocity in rpm at the end of the interval.
b) time required to attain a speed of 30 rpm.

P4. A point on the rim of a flywheel has a peripheral speed of 6 m/s at an instant which is decreasing at a rate of 30 m/s². If the magnitude of the total acceleration of the point at this instant is 50 m/s², find the diameter of the flywheel.

P5. A 1 m diameter flywheel has an initial clockwise angular velocity of 5 rad/s and a constant angular acceleration of 1.5 rad/s². Determine the number of revolutions it must make and the time required to acquire a clockwise angular velocity of 30 rad/s. Also find the magnitude of linear velocity and linear acceleration of a point on the rim of the flywheel at t = 0.

P6. A wheel is attached to the shaft of an electric motor of the rated speed of 1740 rpm. When power is turned on, the unit attains the rated speed in 5 sec and when the power is turned off, the unit comes to rest in 90 sec. Assuming uniformly accelerated motion, determine the number of revolutions the unit turns (i) to attain the rated speed (ii) to come to rest.

(MU May 15)

P7. A concrete mixer drum is being rotated. If the concrete mixer is designed to attain a speed of 6 rad/s uniformly in 30 sec, starting from rest and then maintain this speed, determine the number of revolutions undergone by the drum at t = 300 sec.

P8. A windmill fan during a certain interval of time has an angular acceleration defined by a relation $\alpha = 18\, e^{-0.3t}$ rad/s². The blades of the fan describes a circle of radius 2.5 m. If at t = 0, ω = 0, determine at t = 5 sec a) angular velocity of the fan b) revolutions undergone by the fan. c) Speed of the tip of fan blade.

P9. The variation of angular speed with time of a fan is shown. Find

a) number of revolutions undergone by the fan during a 10 minutes interval.
b) the angular acceleration and angular deceleration during this time interval.
c) the magnitude of velocity and acceleration of a point on the tip of the fan at t = 9 minutes, knowing that the fan described a circle of 1200 mm diameter.

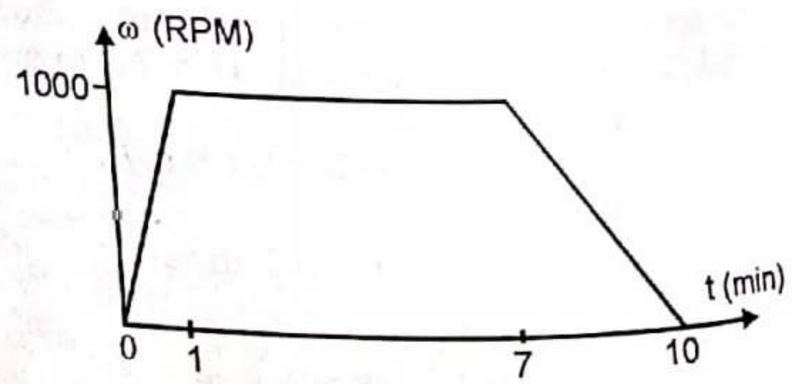

P10. The angular displacement of the rotating wheel is defined by the relation $\theta = \frac{1}{4} t^3 + 2t^2 + 18$ rad. Determine the angular velocity and angular acceleration of the wheel at t = 5 sec.

P11. The angular acceleration of a rotating rod is given by the relation $\alpha = 9.81 \cos\theta - 2.22$ rad/s². The rod starts from rest at θ = 0. Find

a) the angular velocity and angular acceleration of the rod at θ = 30°.
b) the maximum angular velocity and the corresponding angle θ.

P12. A belt is wrapped over two pulleys transmitting the motion without slipping. If the angular velocity of the driver pulley A is increased uniformly from 2 rad/s to 16 rad/s in 4 sec, determine

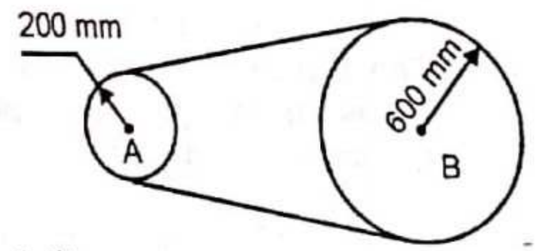

a) the acceleration of the straight position of the belt
b) the magnitude of total acceleration of a point on the rim of pulley B at t = 4 sec.
c) the number of revolutions turned by the two pulleys at t = 4 sec.

P13. Find the angular velocity in rad/s for

a) the second hand, the minute hand and hour hand of a watch,
b) the earth about its own axis.

13.5 General Plane Motion

Translation motion and rotation about fixed axis motion are plane motions since the motion of the body can be analysed by taking a representative slab or a plane of the body. They may also be referred to as a Two Dimensional Motion.

Any plane motion which does not fall under the category of rotation about fixed axis or translation motion can be put under the category of general plane motion. In fact a general plane motion is a combination of translation motion and rotation motion. Three examples of body performing general plane motion are shown below.

In Fig. 13.9 (a), Two blocks A and B travel in fixed slot performing translation motion. The blocks are pin-connected by a link AB. The link AB moves from position (1) to position (2) performing general plane motion. We observe that the link AB rotates, but not about a fixed axis. Thus the centre of rotation of the link AB performing general plane motion keeps on moving at every instant.

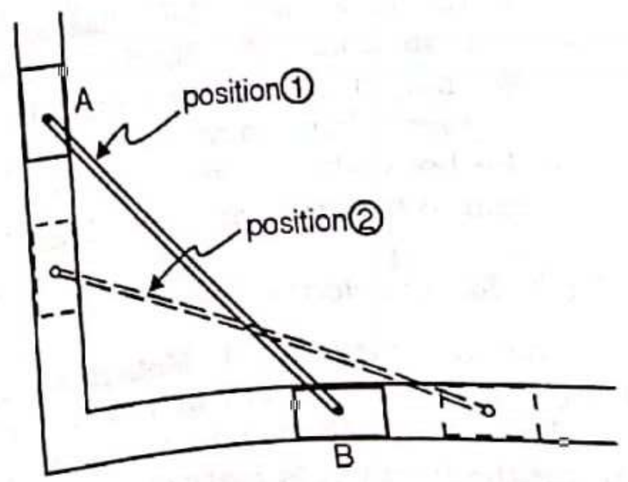

(a)

In Fig. 13.9 (b), rod AB, rod BC and block C, form a pin-connected mechanism. The rod AB performs rotation motion about fixed axis at A. Piston C is free to perform translation motion in the fixed slot. It is the rod BC which neither performs pure translation or pure rotation motion. It is therefore said to perform general plane motion. The centre of rotation of rod BC keeps on changing as it performs general plane motion.

In Fig. 13.9 (c), a wheel rolls without slip on the ground. The rolling wheel rotates as well as translates. It therefore performs general plane motion. In general any body which rolls without slip performs general plane motion.

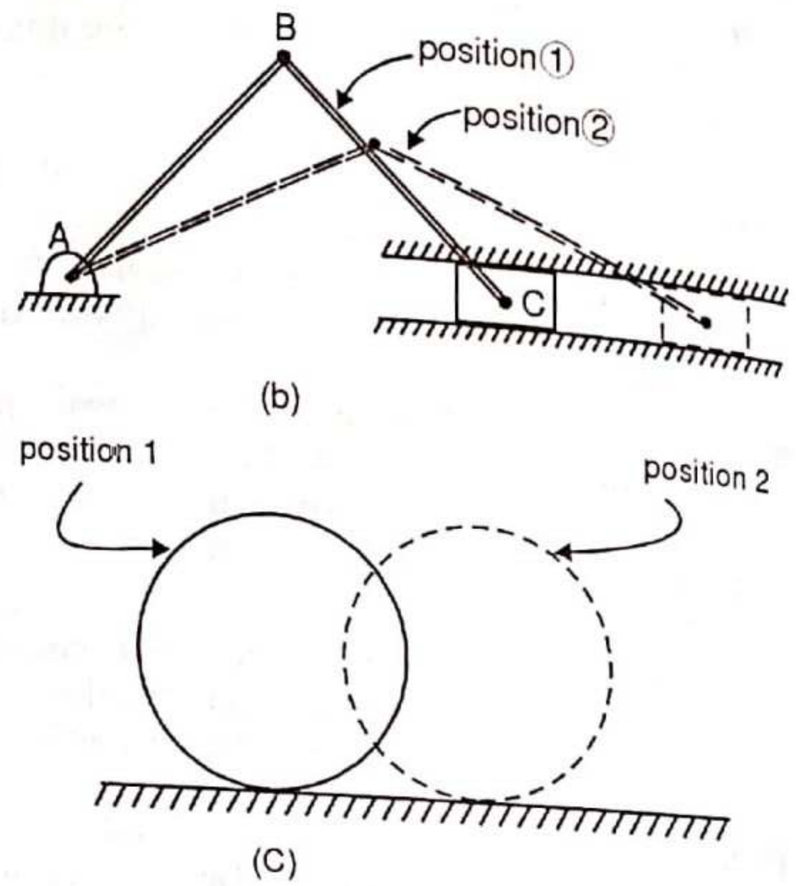

Fig. 13.9

Though G.P. bodies don't actually translate and then rotate in succession, but the motion can be duplicated by first translating the body and then rotating it.

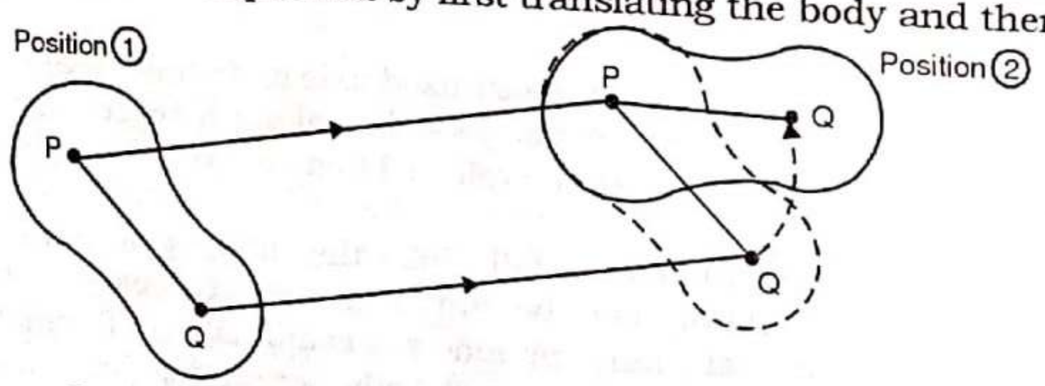

General Plane Motion = Translation Motion + Rotation Motion

Fig. 13.10

Consider a body which has moved from position (1) to position (2) performing G.P. motion. Refer Fig. 13.10. Let P and Q be two arbitrary points chosen on it. We may dublicate the motion by first translating the body to its position (2), i.e segment PQ maintains its orientation and remains parallel. Now we can rotate the body about P to get the true orientation of the body. Hence G.P. Motion is said to be a sum of Translation Motion and Rotation Motion

13.5.1 *Relative Velocity Method*

We know that a G.P. Motion is a sum of translation and rotation motion. To find the angular velocity of a body performing G.P. Motion, we may use the Relative Velocity Method, which is one of the methods for analysing G.P. motion. To understand this method we note down the required steps and simultaneously take up an example and apply the procedure.

Consider a rod AB pin-connected to pistons A and B which move in fixed slots as shown. Let piston B have a known velocity v_B to the right. Let us learn to find angular velocity ω_{AB} of the G.P body AB.

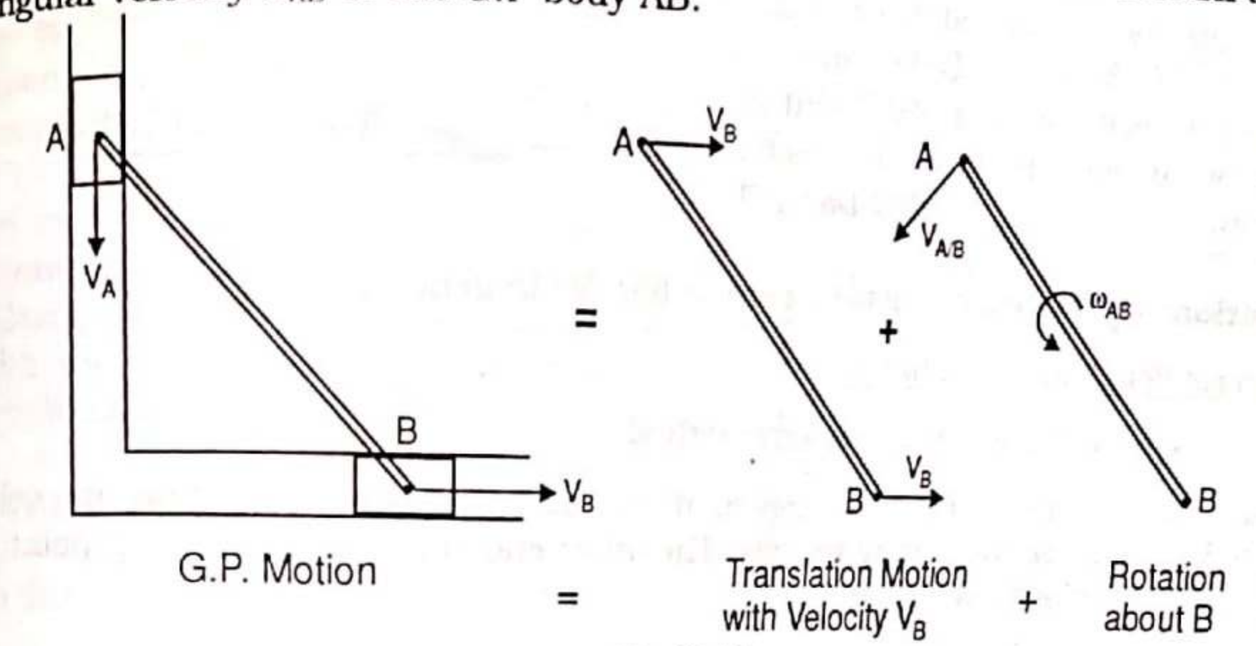

Fig. 13.11

Step 1 – Locate a point on the G.P body whose magnitude and direction of velocity is known. Such a point is referred to as the reference point and the known velocity is referred to as the translating velocity.

In our example, the velocity of point B i.e. v_B is known. Hence B is the reference point and v_B is the translating velocity.

Step 2 – Locate another point on the G.P body whose direction of velocity is known. Such a point is referred to as translation point.

In our example, the direction of velocity of point A is known, since it is constrained to move in the vertical slot. Point A is therefore the translation point.

Step 3 – Translate the body with the translating velocity and then rotate it about the reference point with the angular velocity of the G.P body.

In our example, the bar is translated with translating velocity v_B and then rotated about reference point B with angular velocity ω_{AB}.

Step 4 – Write the relation for the relative linear velocity of translation point.

In our example, we write the relative linear velocity of translation point A as

$$v_{A/B} = r_{AB} \times \omega_{AB} \quad \text{..... (1)}$$

Step 5 – Write the relation for the absolute velocity of the translation point. Simultaneously draw the vector diagram for the same. Obtain the relative velocity of the translation point and hence obtain the angular velocity of the G.P body.

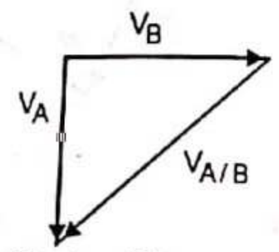

Vector Diagram

Fig. 13.12

In our example,

$$v_A = v_B + v_{A/B} \quad \text{..... (2)}$$

From relation (2), $v_{A/B}$ can be found out, which in turn when subsituted in relation (1) gives the angular velocity ω_{AB}.

Ex. 13.3 A bar AB 2 m long slides down the plane as shown. The end A slides on the horizontal floor with a velocity of 3 m/s. Determine the angular velocity of the rod AB and the velocity of end B for the position shown. ***(MU Dec 17)***

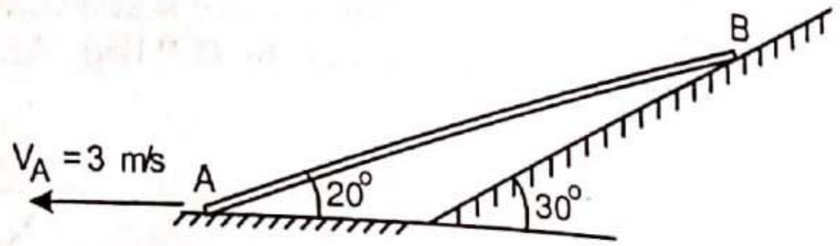

Solution: The system consists of a single bar AB in general plane motion.

General Plane Motion of bar AB

We shall use relative velocity method.

Here, since velocity of A is known, it is the reference point and its velocity i.e. $v_A = 3$ m/s is the translating velocity. The other end B is the translating point, since its direction of velocity is known.

Resolving the G.P. motion of rod AB into a sum of translation motion with velocity v_A and rotation about reference point A.

Since end B is constrained to slide down the plane, direction of velocity of end B is along and down the plane i.e. at angle $\beta = 30°$ with the horizontal.

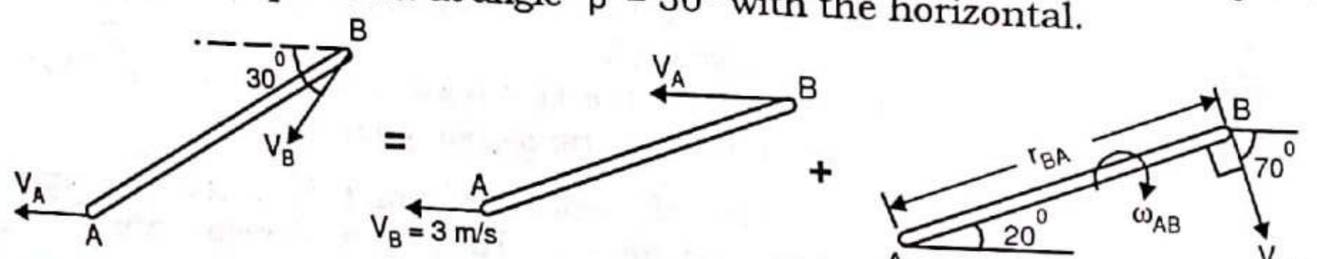

G.P. motion of AB — Translation with velocity v_A — Rotation about reference point A

We therefore have, $\bar{v}_B = \bar{v}_A + \bar{v}_{B/A}$

To solve the above equation, let us draw the vector diagram.

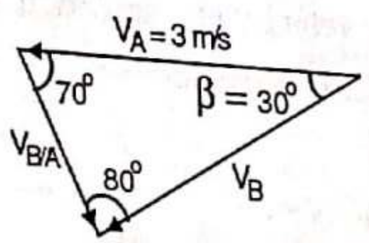

Vector Diagram

Solving the triangle
Using sine rule

$$\frac{3}{\sin 80} = \frac{v_B}{\sin 70} = \frac{v_{B/A}}{\sin 30}$$

$\therefore$ $v_B = 2.862$ m/s ..... **Ans.**

and $v_{B/A} = 1.523$ m/s

Now, $v_{B/A} = r_{BA} \times \omega_{AB}$

$1.523 = 2 \times \omega_{AB}$

$\therefore$ $\omega_{AB} = 0.7615$ rad/s ..... **Ans.**

13.5.2 Instantaneous Centre Method

Instantaneous Centre is defined as the point about which the G.P. body rotates at the given instant. This point keeps on changing as the G.P. body performs its motion. The locus of the instantaneous centres during the motion is known as *centrode.* Instantaneous Centre may be denoted by letter I.

Let us understand the Instantaneous Centre Method to find the angular velocity of a G.P body. Let us work with the earlier example we took in article 13.5.1

Given – v_B i.e. velocity of block B

To find – Angular velocity of rod AB at given instant

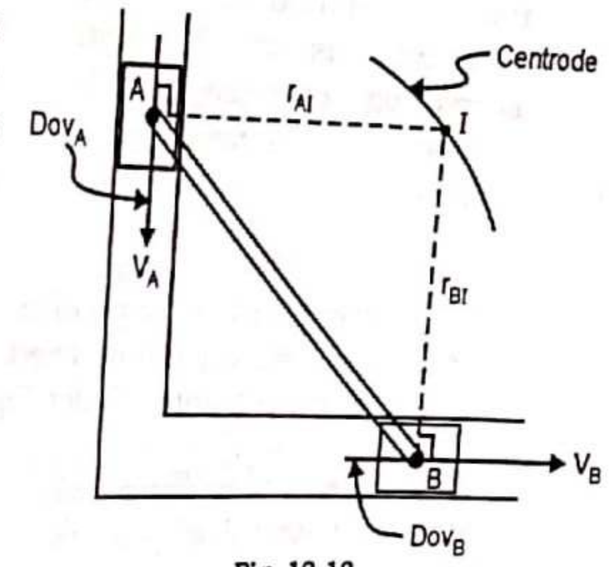

Fig. 13.13

Step – 1 Locate a point on the G.P body whose magnitude, direction and sense of velocity is known and another point whose direction of velocity is known. Mark the direction of velocity (Dov) of these two points.

In our example, the magnitude and Dov of point B (Dov_B) is known and also Dov of point A is known (Dov_A)

Step – 2 Draw perpendiculars to the direction of velocities (Dov) and extend them to intersect at a point. Call this point as I.

Step – 3 Point I i.e. the instantaneous centre, is the centre of rotation of the G.P body at the given instant. Now treating the G.P body as a rotating body about I, and using $v = r\,\omega$ relation, the angular velocity of the G.P body can be found out.

In our example, the radial length r_{BI} can be found out by geometry of Δ ABI.

Next using $v_B = r_{BI} \times \omega_{AB}$

The angular velocity ω_{AB} can be found out

Also now knowing ω_{AB}, velocity of block A can be found out, using

$$v_A = r_{AI} \times \omega_{AB}$$

Step – 4 To find the angular velocity at a new instant, the same procedure steps 1 to 3 are followed and we get a new location of instantaneous centre I. The locus of the instantaneous centre is known as centrode.

13.6 Rotation about Fixed Point

In this type of rigid body motion, the body rotates about a fixed point, but the axis of rotation passing through the fixed point is not stationary as its direction keeps on changing. Such motion is a *three dimensional motion.*

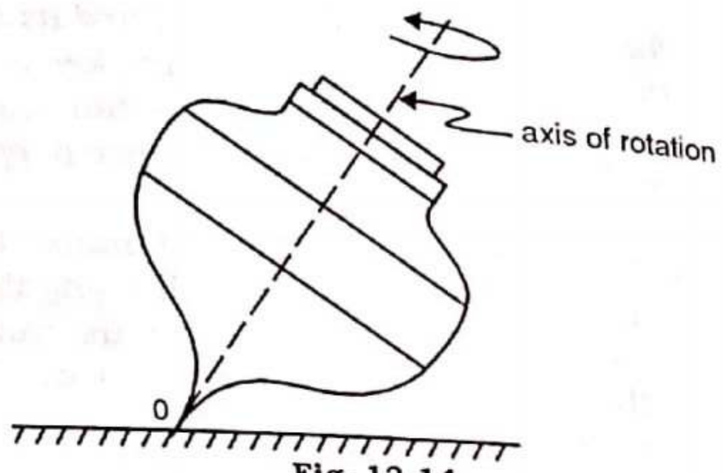

Fig. 13.14

Example of this type of motion is of a top rotating about the pivot at O. The axis of rotation is not fixed but changes its direction as the top rotates about fixed pivot point O. Refer Fig. 13.14

Another example of rotation about a fixed point is of the motion of a boom which is ball and socket supported at a point O on the crane. Fig. 13.15 shows the boom of a crane being raised up by rotation about the z axis, and at the same time the crane itself rotates about the y axis to position the boom over its target.

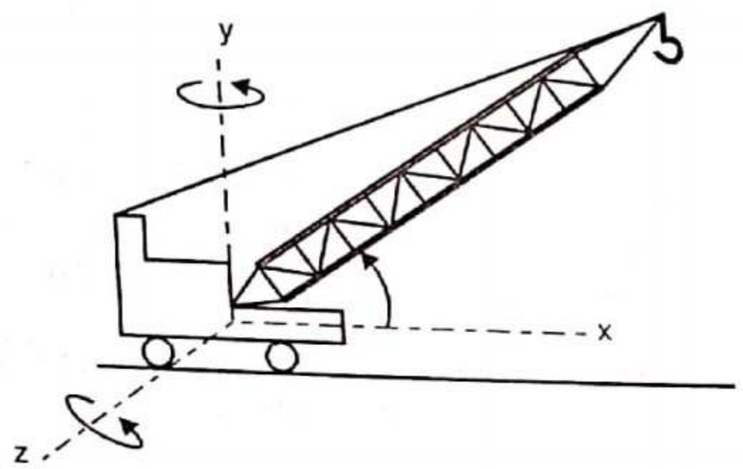

Fig. 13.15

13.7 General Motion

Any other motion of the rigid bodies which do not fit in any of the above four types of rigid body motion, may be classified as a General Motion.

Motion analysis of a rigid body having Rotation Motion about a Fixed Point or General Motion of a rigid body are beyond the scope of this book.

Ex. 3.4 In a crank and connected rod mechanism, the length of crank and connecting rod are 300 mm and 1200 mm respectively. The crank is rotating at 180 rpm anticlockwise. Find the velocity of piston, when the crank is at an angle of 45° with the horizontal. ***(MU Dec 12)***

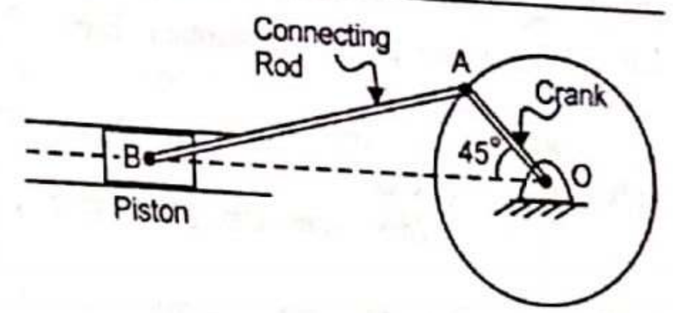

Solution: The system consists of three bodies. The crank OA performs rotation motion about fixed axis at O, the connecting rod AB performs General Plane Motion (GPM), while the piston B performs translation motion.

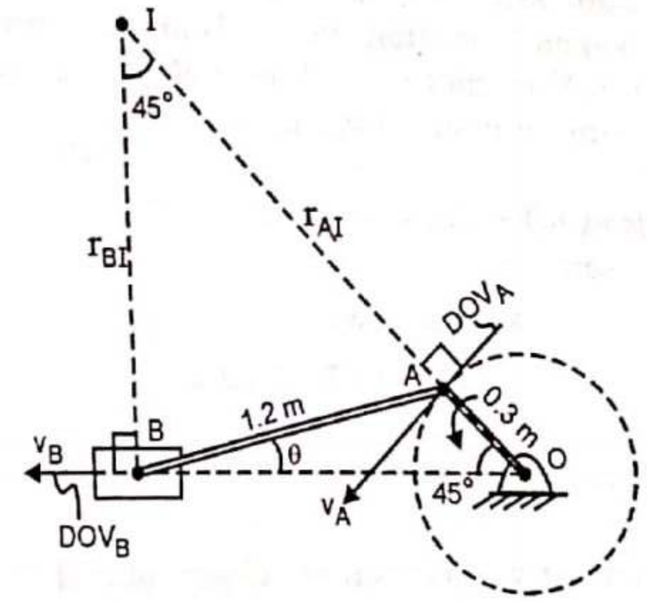

Let us fist analyze rotation motion of crank OA.

Using $v = r\,\omega$

$v_A = r_{AO} \times \omega_{OA}$

$v_A = 0.3 \times 18.849$

$= 5.655$ m/s ↙

$\omega_{OA} = 180$ rpm ↺

$= 180 \times \frac{2\pi}{60}$

$= 18.849$ r/s ↺

General Plane Motions of rod AB

Direction of velocity of end A i.e. DOV$_A$ is $\perp^{er}$ to radius OA.

Also direction of velocity of piston B i.e DOV$_B$ is horizontal since it translates horizontally.

To locate the instantaneous centre of rotation I of rod AB, draw $\perp^{er}$ to DOV$_A$ and DOV$_B$ and get the point of intersection I as shown in figure.

The GP body AB is rotating about I at this instant.

Using $v = r\,\omega$

$v_A = r_{AI} \times \omega_{AB}$

$5.655 = 1.6703 \times \omega_{AB}$

$\therefore \quad \omega_{AB} = 3.392$ r/s ↺

also $v_B = r_{BI} \times \omega_{AB}$

$= 1.39 \times 3.392$

$= 4.714$ m/s ←

∴ Velocity of piston

$= 4.714$ m/s ←

..... **Ans.**

From Δ ABO,

Using sine rule

$\frac{0.3}{\sin\theta} = \frac{1.2}{\sin 45}$

$\therefore \quad \theta = 10.18°$

In Δ ABI

$\angle ABI = 90 - 10.18$

$= 79.82°$

also

$\angle BAI = 180 - 79.82 - 45$

$= 55.18°$

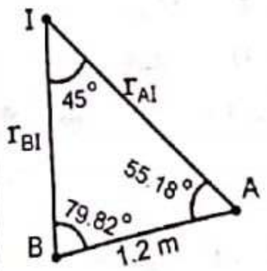

Using sine rule for Δ ABI

$\frac{1.2}{\sin 45} = \frac{r_{AI}}{\sin 79.82} = \frac{r_{BI}}{\sin 55.18}$

$\therefore \quad r_{AI} = 1.6703$ m

and $\quad r_{BI} = 1.39$ m

Ex. 13.5 In the position shown, bar AB has constant angular velocity of 3 rad/s anticlockwise, determine the angular velocity of bar CD.

(MU Dec 08, NMIMS Feb 11)

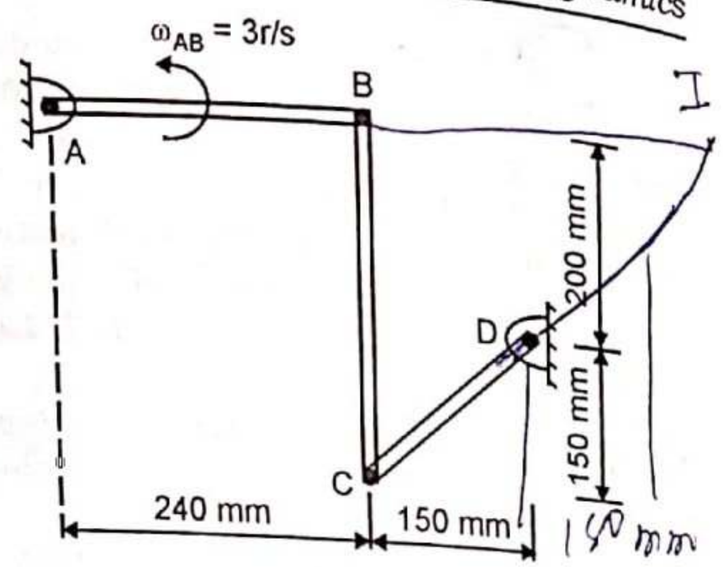

Solution: The system consists of three bodies in motion. Rods AB and CD perform rotation motion, while rod BC performs General Plane Motion.

Rod AB rotates about A

Using $v = r\omega$

$$v_B = r_{BA} \times \omega_{AB}$$
$$= 0.24 \times 3 = 0.72 \text{ m/s} \uparrow$$

Direction velocity of end B i.e. Dov_B is ⊥ to radial length AB.

Similarly, direction of velocity of end C, i.e. Dov_C is ⊥ to radial length CD. Since rod CD rotates about D.

General Plane Motion of rod BC

Locating the instantaneous centre of rotation I of rod BC by drawing ⊥lers to Dov_B and Dov_C and getting the point of intersection, which is I as shown in figure.

From geometry of Δ BCI

$$r_{BI} = 350 \text{ mm} = 0.35 \text{ m} \quad \text{and} \quad r_{CI} = 495 \text{ mm} = 0.495 \text{ m}$$

The General Plane rod BC perform rotation motion @ I at this instant

Using $v = r\omega$

$$v_B = r_{BI} \times \omega_{BC}$$
$$0.72 = 0.35 \times \omega_{BC}$$
$$\therefore \quad \omega_{BC} = 2.057 \text{ rad/sec} \circlearrowleft$$

also $v_C = r_{CI} \times \omega_{BC}$

$$= 0.495 \times 2.057$$
$$= 1.018 \text{ m/s} \nearrow$$

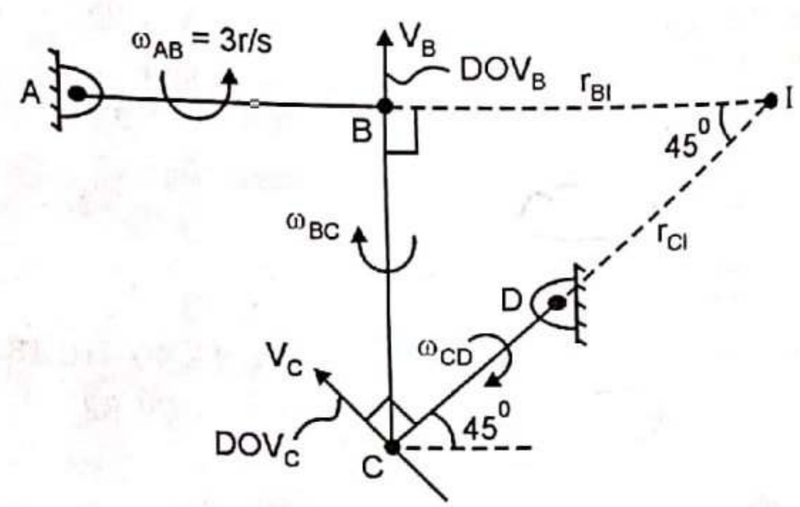

The rod CD is rotating @ D

Using $v = r\omega$

$$v_C = r_{CD} \times \omega_{CD}$$
$$1.018 = 0.212 \times \omega_{CD}$$
$$\therefore \quad \omega_{CD} = 4.8 \text{ rad/sec} \circlearrowleft$$

..... **Ans.**

Ex. 13.6 Figure shows a collar B which moves up with constant velocity of 2 m/s. To the collar is pinned a rod AB, the end A of which slides freely against a 30° sloping ground. For this instant, determine the angular velocity of the rod and velocity of end A of the rod. ***(MU May 13)***

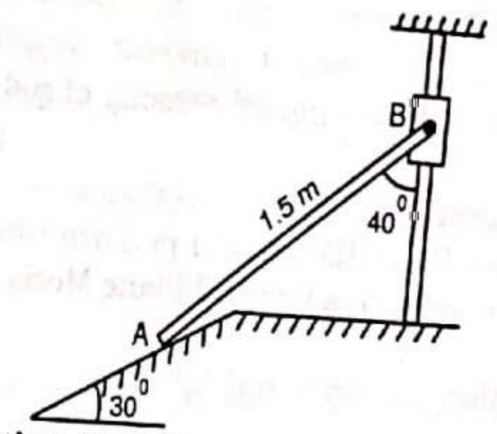

Solution: The system consists of two bodies in motion. Rod AB performs General Plane Motion and collar B performs Rectilinear Translation Motion.

General Plane Motion of rod AB

Let us use Instantaneous Centre Method.

(1) Velocity of point B on the G.P. body = the velocity of collar = 2 m/s

Also direction of velocity (Dov_B) is vertical.

Direction of velocity (Dov_A) of end A is along the inclined plane.

(2) Drawing the perpendiculars to the direction of velocity at A and B. Let the point of intersection be I.

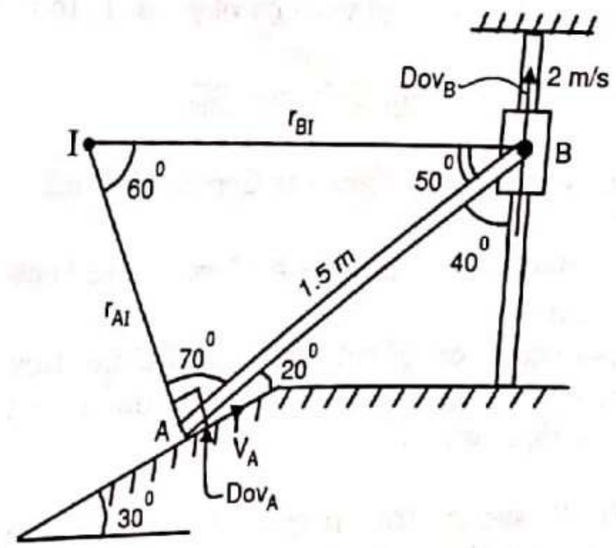

(3) From geometry the radial lengths r_{AI} and r_{BI} need to be worked out.

Using sine rule to solve Δ ABI

$$\frac{1.5}{\sin 60} = \frac{r_{AI}}{\sin 50} = \frac{r_{BI}}{\sin 70}$$

$$\therefore \quad r_{AI} = 1.327 \text{ m} \quad \text{and} \quad r_{BI} = 1.627 \text{ m}$$

4) Since I is the instantaneous centre of rotation of the G.P body AB, we have

$$v_B = r_{BI} \times \omega_{AB}$$
$$\therefore \quad 2 = 1.627 \times \omega_{AB}$$
$$\omega_{AB} = 1.229 \text{ rad/s} \circlearrowleft$$

..... **Ans.**

also

$$v_A = r_{AI} \times \omega_{AB}$$
$$\therefore \quad = 1.327 \times 1.229$$
$$v_A = 1.63 \text{ m/s}$$

..... **Ans.**

$$\therefore \quad v_A = 1.63 \text{ m/s} \quad \theta = 30° \nearrow$$

Ex. 13.7 Figure shows a mechanism in motion. Rod AB has a constant angular velocity of 3 rad/s clockwise. Find angular velocity of rod BC and rod CD.

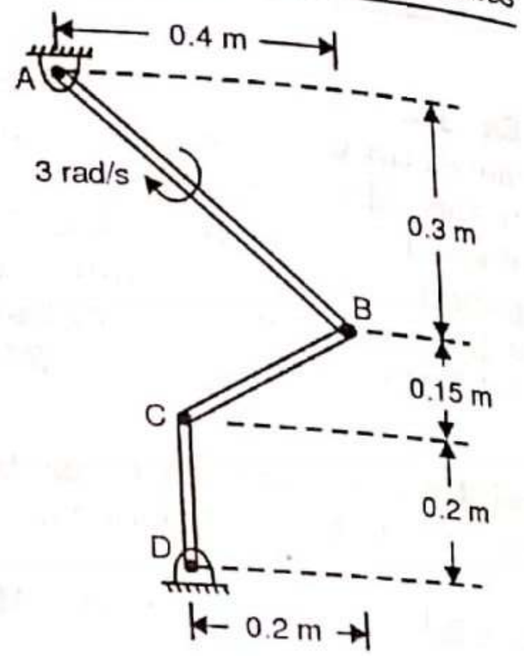

Solution: The system consists of three bodies in motion. Rods AB and CD perform rotation motion and rod BC performs General Plane Motion.

Rotation Motion of rod AB

Rod AB rotates about A

$\therefore$ velocity of end B $= v_B = r_{BA} \times \omega_{AB}$

$= 0.5 \times 3$

$\therefore \quad v_B = 1.5$ m/s

also the direction of velocity of v_B is $\perp$ to radial length AB.

General Plane Motion of rod BC

Let us use Instantaneous Centre Method.

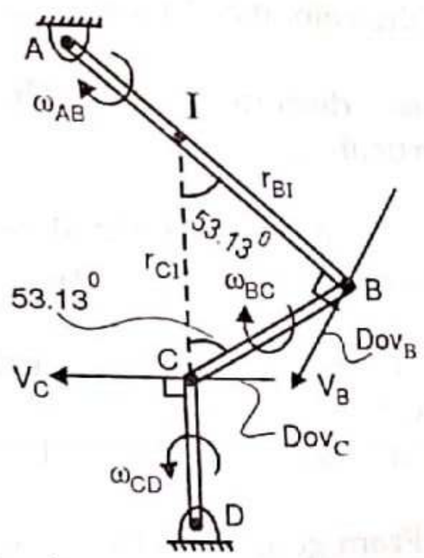

1) Velocity of end B, $v_B = 1.5$ m/s and Dov_B is $\perp$ to radial length AB.

Also direction of velocity of end C i.e. Dov_C is $\perp$ to radial length CD since C is also common to rod CD, which rotates about D.

2) Drawing the perpendiculars to the directions of velocity, Dov_B and Dov_C. Let the point of intersection be I.

3) From geometry the radial lengths r_{BI} and r_{CI} need to be worked out.

Solving Δ BCI, L (BC) = 0.25 m

Since Δ BCI is isosceles, r_{BI} = L (BC) = 0.25 m also $r_{CI} = 0.3$ m

4) Since I is the instantaneous centre of rotation of the G.P body BC, we have

$v_B = r_{BI} \times \omega_{BC} \quad \therefore \quad 1.5 = 0.25 \times \omega_{BC}$ or $\omega_{BC} = 6$ rad/s ↻ .....**Ans.**

also $v_C = r_{CI} \times \omega_{BC} = 0.3 \times 6 \quad \therefore \quad v_C = 1.8$ m/s ←

Rotation Motion of rod CD

Rod CD rotates about D

Knowing C is a common end to both rods BC and rod CD, we use

$v_C = 1.8$ m/s from above

$v_C = r_{CD} \times \omega_{CD} \quad \therefore \quad 1.8 = 0.2 \times \omega_{CD}$ or $\omega_{CD} = 9$ rad/s ↺ ..... **Ans.**

Ex. 13.8 Rod AB of length 3 m is kept on smooth planes as shown in figure. The velocity of end A is 5 m/s along the inclined plane. Locate the ICR and find the velocity of end B. ***(MU May 11)***

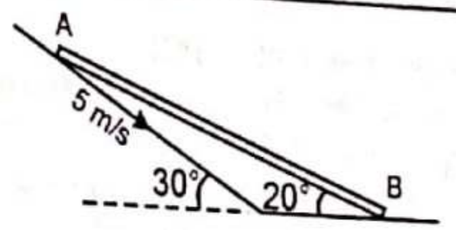

Solution: The system consist of a single rod AB which slides along the incline performing general plane motion (GPM).

Direction of velocity of end A i.e. DOV_A is along the incline while Direction of velocity of end B i.e. DOV_B is along the horizontal floor.

To locate the instantaneous centre of rotation I of rod AB, draw perpendiculars to DOV_A and DOV_B and get the point of intersection I as shown in figure.

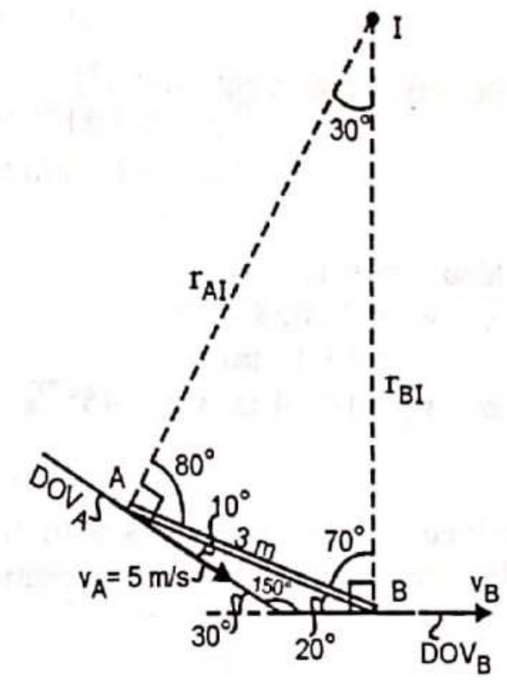

Using $v = r\,\omega$

$v_A = r_{AI} \times \omega_{AB}$

$5 = 5.638 \times \omega_{AB}$

$\therefore \quad \omega_{AB} = 0.8868$ rad/s ↺

also $v_B = r_{BI} \times \omega_{AB}$

$= 5.909 \times 0.8868$

$\therefore \quad v_B = 5.24$ m/s → ..... **Ans.**

From Δ ABI, using sine rule

$$\frac{3}{\sin 30} = \frac{r_{AI}}{\sin 70} = \frac{r_{BI}}{\sin 80}$$

$\therefore \quad r_{AI} = 5.638$ m and $r_{BI} = 5.909$ m

Ex. 13.9 A 0.4 m diameter wheel rolls on a horizontal plane without slip, such that its centre has a velocity of 10 m/s towards right. Find the angular velocity of the wheel and also velocities of points P, Q and R shown on the wheel.
Given L (CP) = 0.15 m.

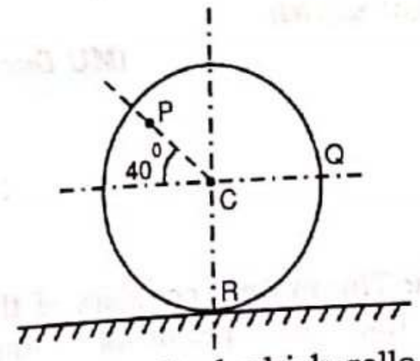

Solution: The wheel performs General Plane Motion. For a wheel which rolls without slip, the instantaneous centre of rotation is the point of contact with the ground (since the centre of rotation should have zero velocity, and the point in contact with the ground has velocity of the ground, which is zero). Therefore point R is the instantaneous centre of rotation I.

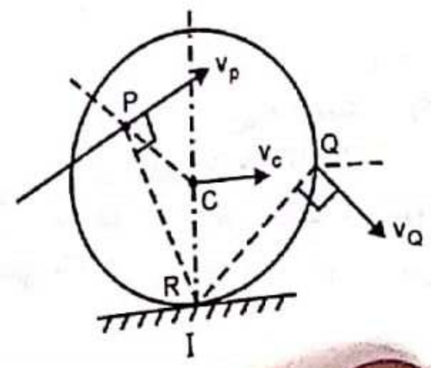

Now,

$v_C = r_{CI} \times \omega$

$10 = 0.2 \times \omega$

$\therefore \quad \omega = 50$ rad/s ↻

Also $\quad v_P = r_{PI} \times \omega$ ..... (1)

From geometry of Δ PCI
The radial length r_{PI} can be found out
Using cosine rule

$$(r_{PI})^2 = (0.15)^2 + (0.2)^2 - 2 \times 0.15 \times 0.2 \cos 130$$

$$\therefore \quad r_{PI} = 0.3179 \text{ m}$$

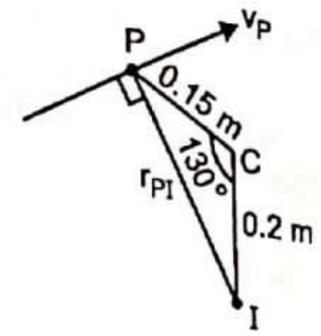

Substituting in equation (1)

$$v_P = 0.3179 \times 50 = 15.895 \text{ m/s}$$

$$\therefore \quad v_P = 15.895 \text{ m/s} \nearrow$$

Also $v_Q = r_{QI} \times \omega$

$\therefore \quad v_Q = 0.2828 \times 50$

$= 14.14$ m/s

or $v_Q = 14.14$ m/s $\theta = 45° \searrow$ ...**Ans.**

From ΔCQI

$(r_{QI})^2 = (0.2)^2 + (0.2)^2$

$\therefore \quad r_{QI} = 0.2828$ m

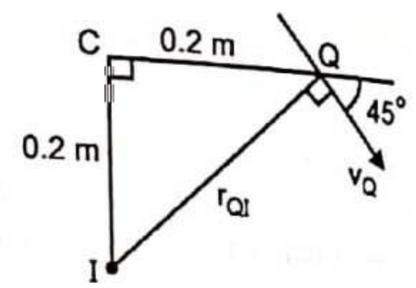

Since point R coincides with the instantaneous centre I, velocity of point R is zero, because the instantaneous centre of rotation has zero velocity.

$\therefore \quad v_R = 0$ ..... **Ans.**

Ex. 13.10 At the position shown in figure, the crank AB has angular velocity of 3 rad/s clockwise. Find the velocity of slider C and the point D at the instant shown.

(MU Dec 12)

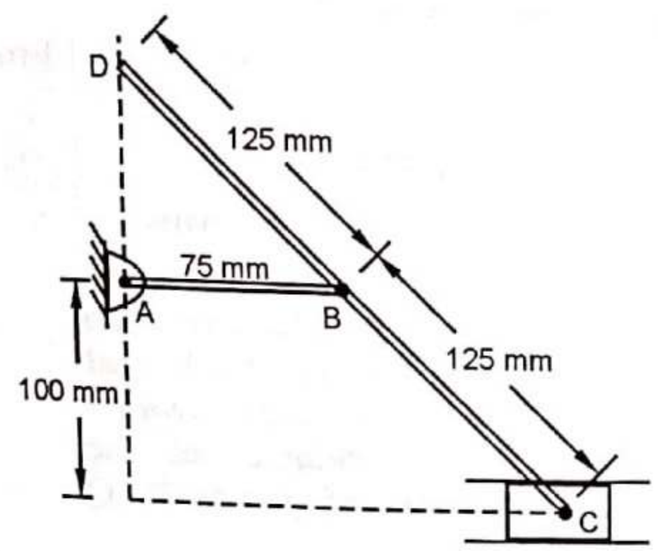

Solution: The system consists of three bodies. Rod AB performs rotation motion about A, rod CD performs GP Motion while block C performs translation motion.
Let us first analyse rotation motion of rod AB

Using $v = r\,\omega$

$$v_B = r_{BA} \times \omega_{AB}$$

$$= 0.075 \times 3$$

$$\therefore \quad v_B = 0.225 \text{ m/s} \downarrow$$

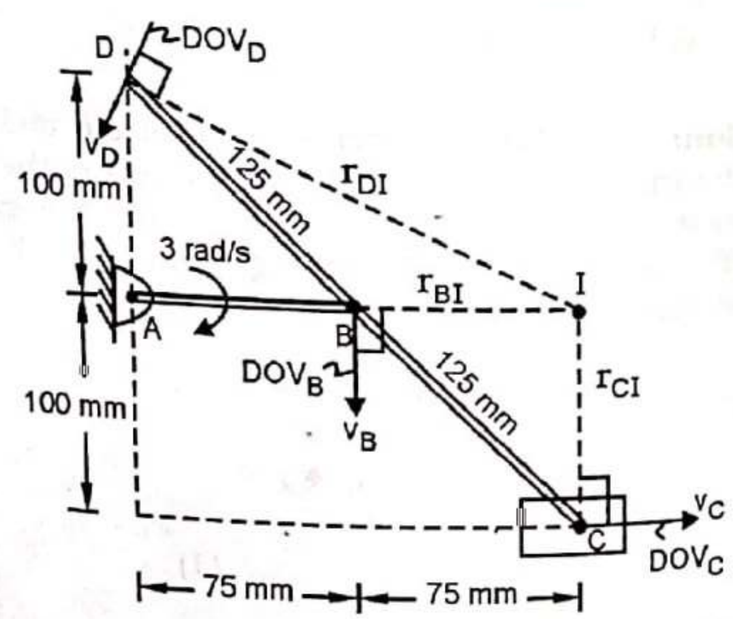

General Plane motion of rod CD
The direction of velocity of end C i.e. DOV_C is horizontal (Since end C is pinned to the slider which travels in the horizontal slot). The direction velocity of pin B i.e DOV_B on rod CD is vertical as shown.
To locate the instantaneous centre of rotation I of rod CD, draw perpendiculars to DOV_B and DOV_C and get the point of intersection I as shown in figure.

The GP body CD is rotating about I at this instant.
Using $v = r\,\omega$

$$v_B = r_{BI} \times \omega_{CD}$$

$$0.225 = 0.075 \times \omega_{CD}$$

$$\therefore \quad \omega_{CD} = 3 \text{ rad/s} \circlearrowleft$$

From figure itself we can say

$r_{BI} = 0.075$m

and $r_{CI} = 0.1$ m

also, $v_C = r_{CI} \times \omega_{AB}$

$= 0.1 \times 3 \quad = 0.3$ m/s →

∴ Velocity of slider C = 0.3 m/s →

To find velocity of end D of rod CD

Join D and I to get the radius r_{DI}

Using $v = r \times \omega$

$$v_D = r_{DI} \times \omega_{CD}$$

$$= 0.1803 \times 3$$

$$\therefore \quad v_D = 0.5408 \text{ m/s} \swarrow$$

..... **Ans.**

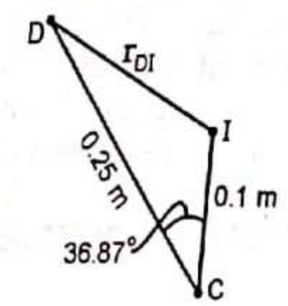

From Δ CDI
Using cosine rule

$$r_{DI} = \sqrt{0.25^2 + 0.1^2 - 2 \times 0.25 \times 0.1 \times \cos 36.87}$$

$$= 0.1803 \text{ m}$$

Exercise 13.2

P1. The rod ABC is guided by two blocks A and B which move in channels as shown. At the given instant, velocity of block A is 5 m/s downwards. Determine
a) the angular velocity of rod ABC
b) velocities of block B and end C of rod.

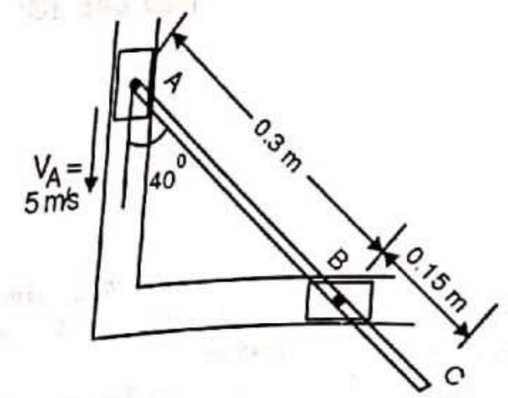

P2. A rod AB 26 m long leans against a vertical wall. The end 'A' on the floor is drawn away from the wall at a rate of 24 m/s. When the end 'A' of the rod is 10 m from the wall, determine the velocity of the end 'B' sliding down vertically and the angular velocity of the rod AB. ***(MU May 09)***

P3. A slider crank mechanism is shown in figure. The crank OA rotates anticlockwise at 100 rad/s. Find the angular velocity of rod AB and the velocity of slider at B.

(MU Dec 09)

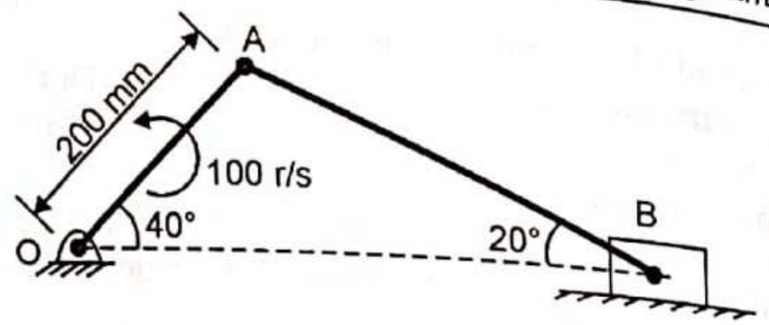

P4. In a slider crank mechanism as shown in figure the crank is rotating at as constant speed of 120 rev/min. clockwise The connecting rod is 600 mm long and the crank is 100 mm long. For an angle of 30°, determine the absolute velocity of the crosshead P. ***(VJTI May 08)***

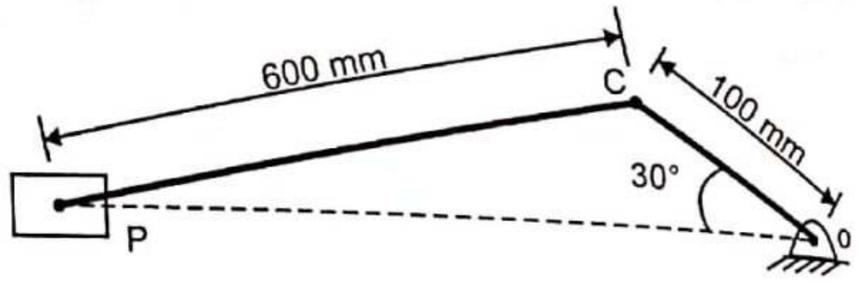

P5. Block 'D' shown in figure moves with a speed of 3 m/s. Determine the angular velocities of links BD and AB and the velocity of point B at the instant shown. Use method of instantaneous centre of zero velocity.

(MU May 09, VJTI Dec 13)

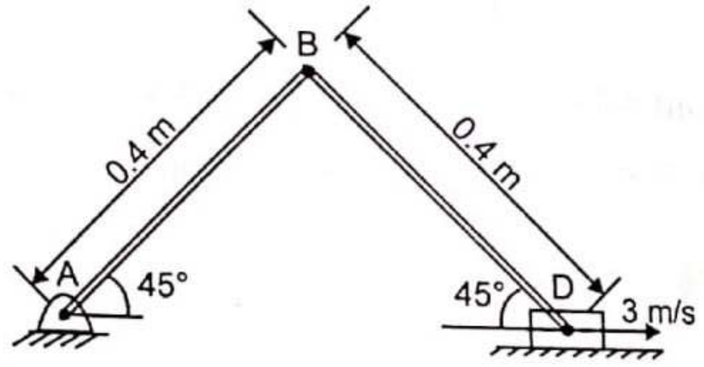

P6. In figure collar C slides on a horizontal rod. In the position shown rod AB is horizontal and has angular velocity of 0.6 rad/sec clockwise. Determine angular velocity of BC and velocity of collar C.

(MU Dec 13)

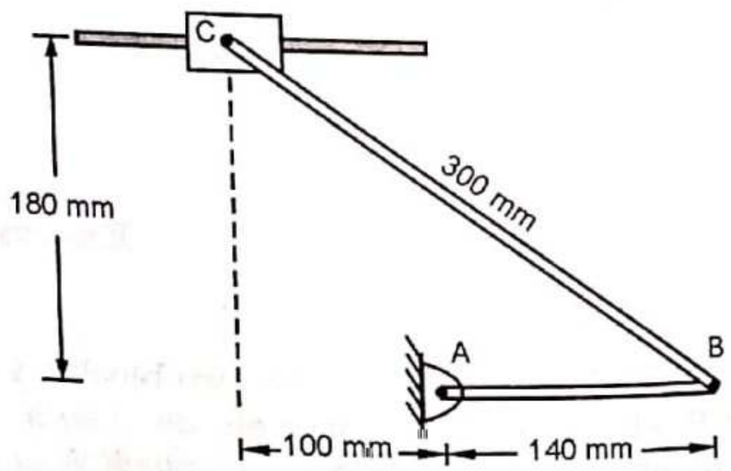

P7. For the position shown, the angular velocity of bar AB is 10 rad/s anticlockwise. Determine the angular velocities of bars BC and CD.

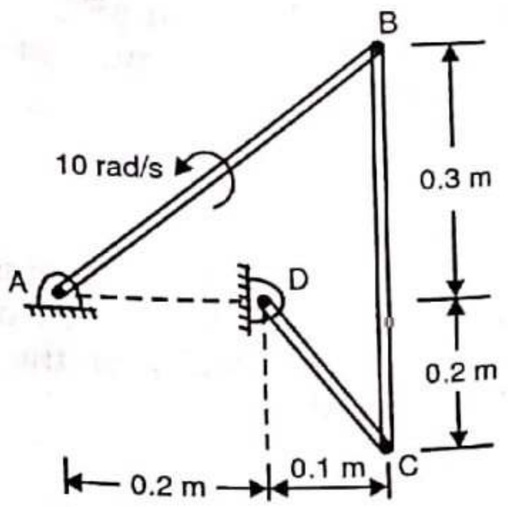

P8. Rod BCD is pinned to rod AB at B and has a slider at C which slides freely in the vertical slot. At the instant shown, the angular velocity of rod AB is 4 rad/s clockwise. Determine

a) angular velocity of rod BD
b) velocity of slider C
c) velocity of end D of the rod BD

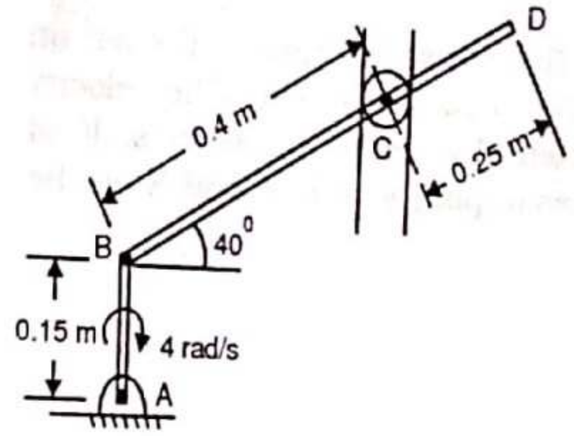

P9. A rod AB 1.8 m long, slides against an inclined plane and a horizontal floor. The end A has a velocity of 5 m/s to the right. Determine the angular velocity of the rod and the magnitude of velocity of end B and the midpoint M of the rod for the instant shown.

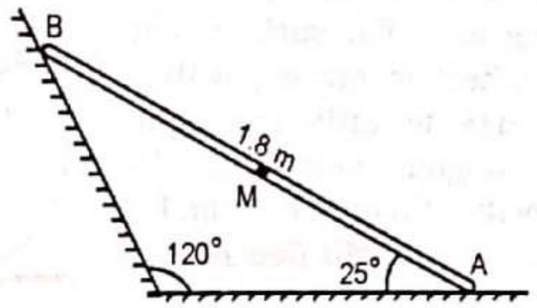

P10. A slender rod AB of length 3 m which remains always in a same vertical plane as its ends A and B are constrained to remain in contact with a horizontal floor and a vertical wall as shown. Determine the velocity at point B using instantaneous centre method. ***(VJTI Dec 11)***

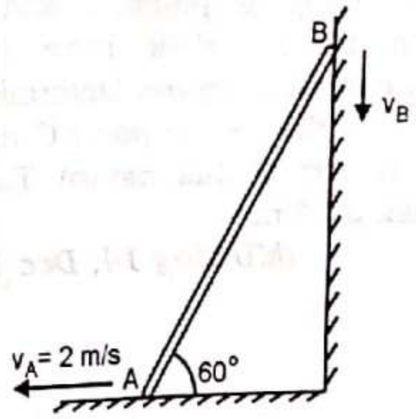

P11. A wheel of radius 0.75 m rolls without slipping on a horizontal surface to the right. Determine the velocities of the points P and Q shown in figure when the velocity of centre of the wheel is 10 m/s towards right. ***(MU Dec 09)***

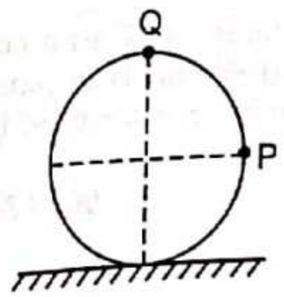

P12. One end of rod AB is pinned to the cylinder of diameter 0.5 m while the other end slides vertically up the wall with a uniform speed of 2 m/s. For the instant, when the end A is vertically over the centre of the cylinder, find the angular velocity of the cylinder, assuming it to roll without slip.

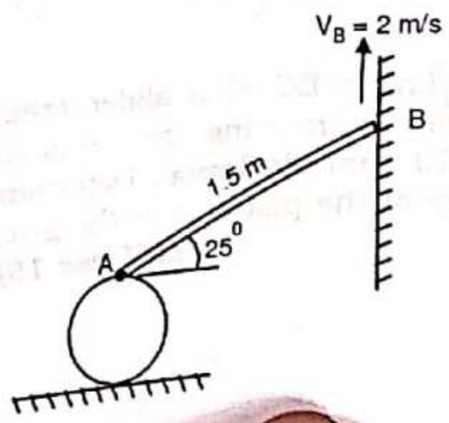

P13. A flanged wheel rolls to the left on a horizontal rail as shown. The velocity of the wheel's centre is 4 m/s. Find velocities of points D, E, F and H on the wheel.

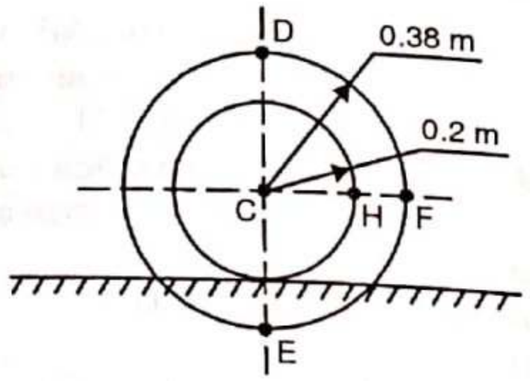

P14. A wheel of 2 m diameter rolls without slipping on a flat surface. The centre of the wheel is moving with a velocity of 4 m/s towards the right. Determine the angular velocity of the wheel and velocity of points P, Q and R on the wheel. ***(MU Dec 14)***

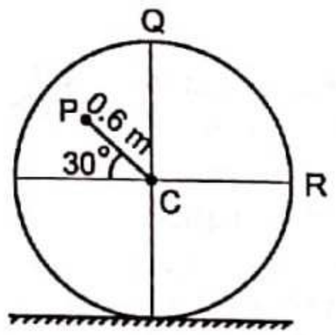

P15. Due to slipping, points A and B on the rim of the disk have the velocities as shown in figure. Determine the velocities of the centre point C and point D on the rim at this instant. Take radius of disk 0.24 m.

(MU May 14, Dec 15)

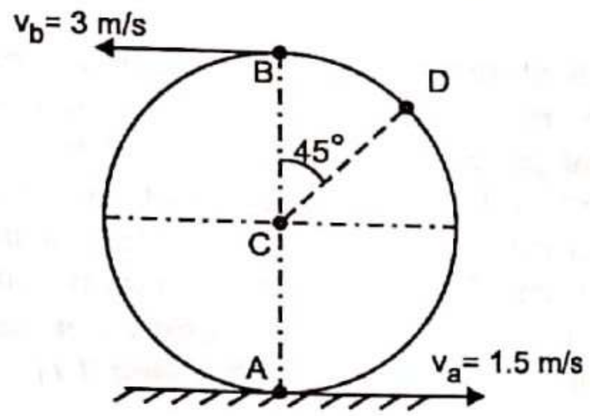

P16. A bar BC slides at C in a collar at 4 m/sec. The other end B is pinned on a roller. Find angular velocity of bar BC and the roller.

(KJS Nov 15)

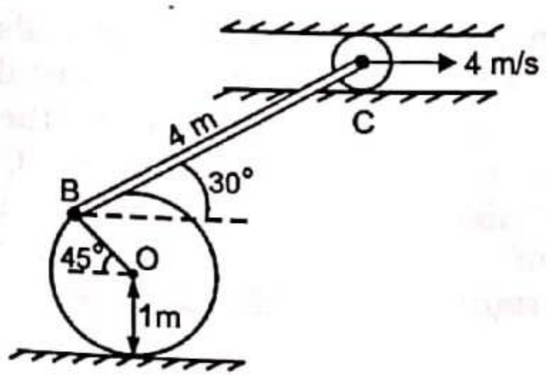

P17. The crank BC of a slider crank mechanism is rotating at constant speed of 30 rpm clockwise. Determine the velocity of the piston A at the given instant.

(MU Dec 15)

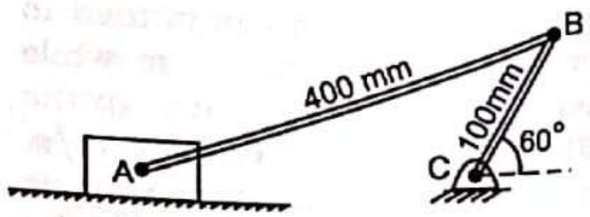

P18. If the link CD is rotating at 5 rad/sec anticlockwise, determine the angular velocity of link AB at the instant shown.

(MU Dec 11)

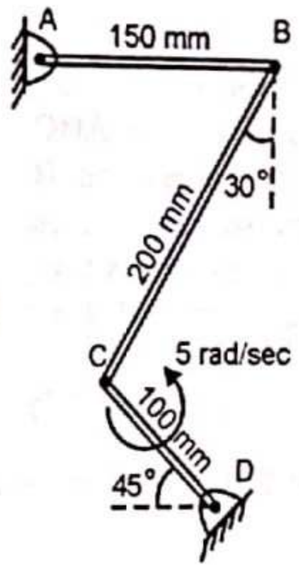

P19. Blocks A, B and C slide in fixed slots as shown. The blocks form a mechanism, being interconnected by pin-connected links AB and BC. L (AB) = 400 mm and L (BC) = 600 mm. At the given instant, block A has a velocity of 0.15 m/s downwards. Determine the velocities of blocks B and C for the given instant.

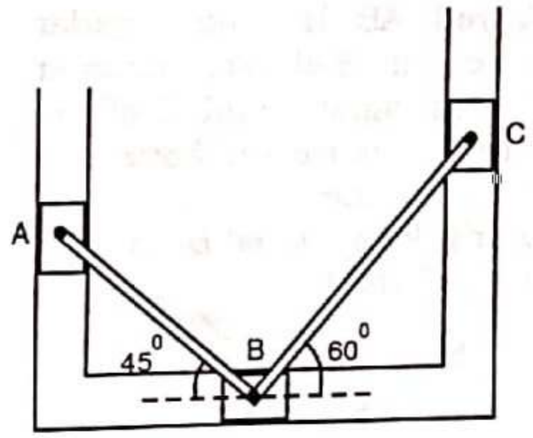

P20. In the mechanism shown the angular velocity of link AB is 5 rad/s anticlockwise. At the instant shown, determine the angular velocity of link BC, velocity of piston C and velocity of midpoint M of link BC.

(MU May 14, VJTI Apr 17)

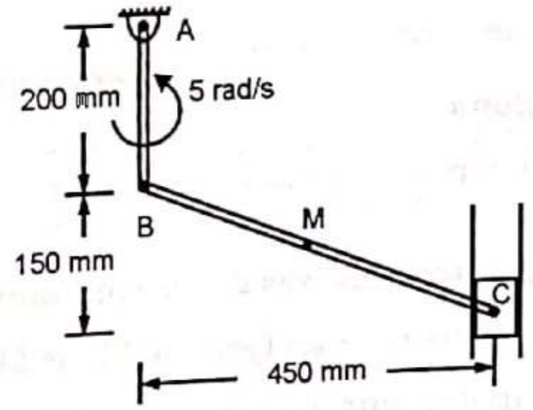

P21. In the engine system shown, the crank AB has a constant clockwise angular velocity of 2000 rpm. For the crank position shown determine the angular velocity of connecting rod BD and velocity of the piston D.
Use ICR method. ***(VJTI Nov 12)***

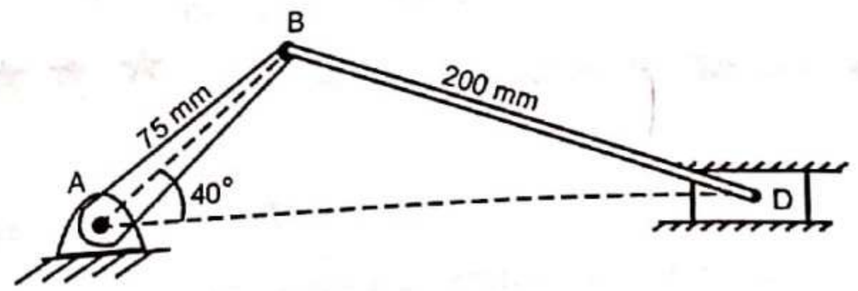

P22. Locate the instantaneous center of rotation for the link ABC and determine velocity of points B & C. Angular velocity of rod OA is 15 rad/sec counter clock wise. Length of OA is 200 mm, AB is 400 mm and BC is 150 mm.

(MU Dec 10)

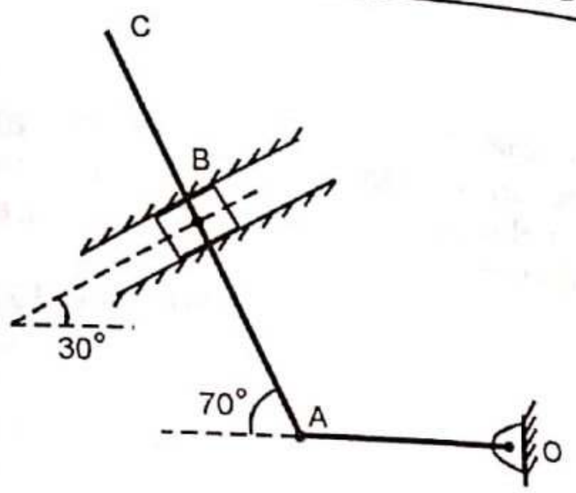

P23. A rod AB has an angular velocity of 2 rad/sec, counter clockwise as shown. End C of rod BC is free to move on horizontal surface. Determine
(i) Angular velocity of rod BC and
(ii) Velocity of end C.

(MU Dec 16)

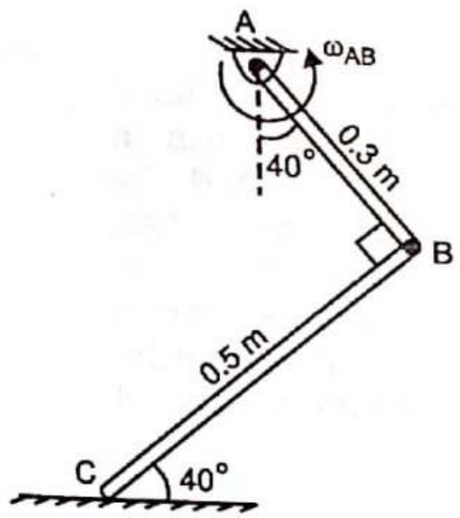

Exercise 13.3

Theory Questions

Q.1 Classify types of motion for rigid body with suitable examples.
(VJTI May 09, Nov 09, Apr 11, 17)

Q.2 Explain Instantaneous Centre of Rotation. ***(MU May 08, 11)***

Q.3 Write a short note on General Plane Motion.

Q.4 Define Instantaneous Centre of zero velocity and explain how one can locate the same.
(VJTI Dec 13)

★ ★ ★

Chapter 14

Moment of Inertia

14.1 Introduction

The Moment of Inertia of a plane area with respect to an axis in its plane is defined by the integral

$$I_{AB} = \int r^2 dA$$

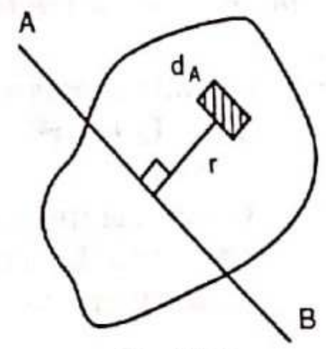

Fig. 14.1

To understand the general expression of moment of inertia consider a plane area as shown in Fig. 14.1.

Let dA be the area of an element inside the plane area. Let the element be located at a perpendicular distance r from an axis AB.

Now the moment of the elemental area about the axis AB = r dA

The moment of the moment of area (second moment) = r^2 dA

∴ The second moment of the entire plane area $= \int r^2 dA$

This is commonly referred to as Moment of Inertia

∴ $$I_{AB} = \int r^2 dA \quad \text{..... 14.1}$$ is the general expression for moment of inertia of plane areas.

The units of moment of inertia are mm^4, cm^4 or m^4 depending on the unit of linear measurement.

14.2 Application of Moment of Inertia of Plane Areas

1. The moment of inertia of a plane area gives a quantitative estimate of the distribution of the area with respect to the reference axis. Moment of inertia of an area is also known as *second moment of area.*
2. Determination of moment of inertia is important in studying the load carrying capacity of any structural member subjected to bending.

Hence the moment of inertia calculations of the cross-sectional areas of structural members will be required to be carried out in this subject of strength of materials and also other subjects like structural design and machine design.

14.3 Theorems of Moment of Inertia

There are two theorems on moment of inertia
1. Parallel axis theorem
2. Perpendicular axis theorem.

14.3.1 Parallel Axis Theorem

The moment of inertia of a plane area with respect to any axis in its plane is equal to the sum of moment of inertia with respect to a parallel centroidal axis and the product of the total area and the square of the distance between the two axes.

Mathematically expressed as

$$I_{AB} = I_G + A.r^2 \quad \text{..... 14.2}$$

Where, A = area of the plane figure
r = perpendicular distance between the two axes

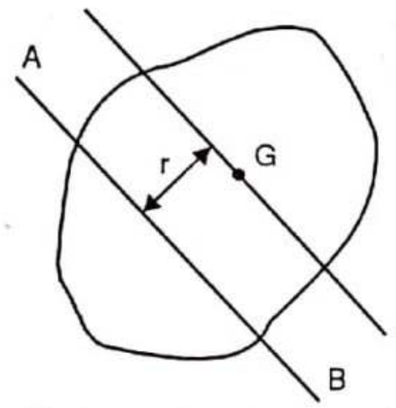

Fig. 14.2

Proof: Consider an elemental strip of area dA located at a distance y from the centroidal axis.

We know

$$I_{AB} = \Sigma (y + r)^2 \, dA$$

$$= \Sigma (y^2 + 2yr + r^2) \, dA$$

$$= \Sigma y^2 \, dA + \Sigma 2yr \, dA + \Sigma r^2 \, dA$$

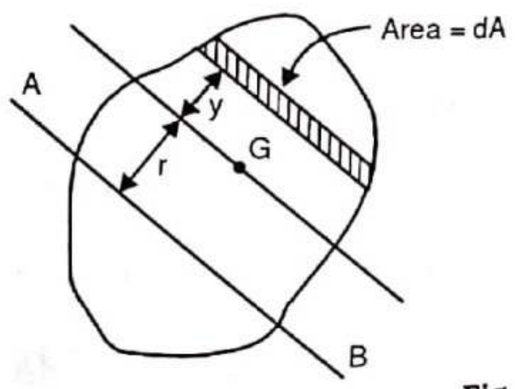

Fig. 14.3

Let us analyse the three terms in the above expression,

$\Sigma y^2 \, dA$ = moment of inertia about centroidal axis = I_G

$$\Sigma 2.y.r. \, dA = 2r.\Sigma y.dA = 2r.A \frac{\Sigma y.dA}{A}$$

Here $\frac{\Sigma y.dA}{A}$ is the distance of the centroid from the centroidal axis, which is zero, since the centroidal axis passes through G.

Therefore the second term $\Sigma 2yr \, dA = 0$

The third term $\Sigma r^2 \, dA = r^2 \Sigma dA = A.r^2$

$\therefore \quad I_{AB} = I_G + A r^2$ -------- proved.

14.3.2 Perpendicular Axis Theorem.

Moment of inertia about an axis perpendicular to the plane containing two axes perpendicular to each other and passing through their point of intersection is equal to the sum of moment of inertia of the two axes.

Refer Fig. 4

$$I_{zz} = I_{xx} + I_{yy} \quad \text{..... 14.3}$$

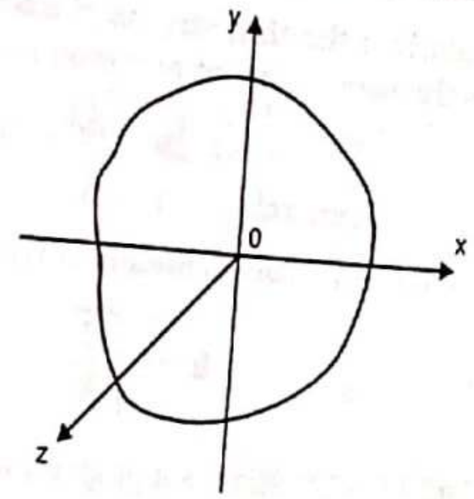

Fig. 14.4

I_{zz} is also known as *Polar Moment of Inertia* and represented as J_0

$$\therefore \quad J_0 = I_{xx} + I_{yy}$$

Proof: Let us consider an elemental area dA located at (x, y) from the origin O. If r is the straight line distance from the origin then $r^2 = x^2 + y^2$

We know

$$I_{zz} = \int r^2 dA$$

$$= \int (x^2 + y^2) dA$$

$$= \int x^2 dA + \int y^2 dA$$

$$= I_{yy} + I_{xx}$$

or

$$I_{zz} = I_{xx} + I_{yy} \text{ --------- proved}$$

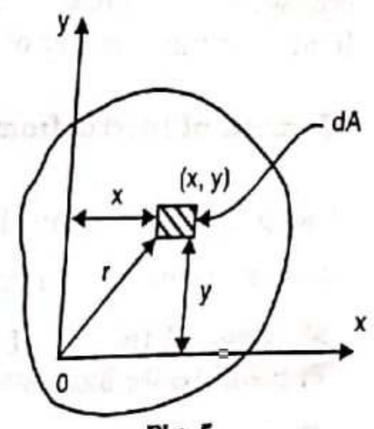

Fig. 5

14.4 Radius Of Gyration

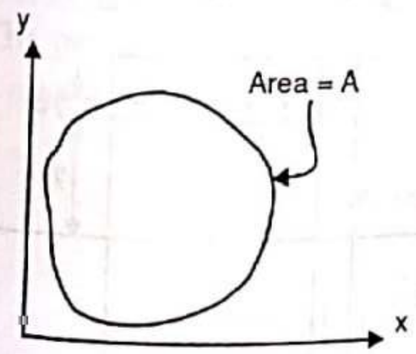

Fig. 14.6 (a)

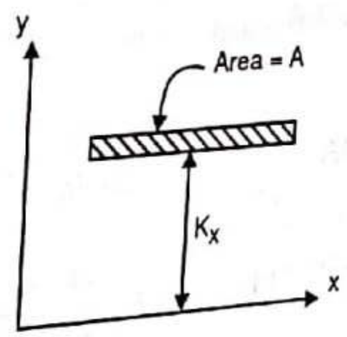

Fig. 14.6 (b)

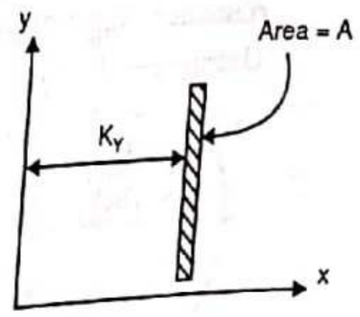

Fig. 14.6 (c)

Fig. 14.6 (a) shows a plane figure of area = A.

Let I_{xx} and I_{yy} be its moment of inertia about x and y axis respectively.

Let the figure be compressed into a thin strip of the same area A at a distance k_x from the x axis such that it has the same moment of inertia i.e. I_{xx}.

Refer Fig. 14.6 (b).

Then from the definition $\quad I_{xx} = A.k_x^2$

Similarly if the thin strip is placed at a distance k_y from the y axis such that it has the same moment of inertia i.e. I_{yy}. Refer Fig. 14.6 (c)

Then $I_{yy} = A.k_y^2$

or in general $I = A.k^2$

where k is known as Radius of Gyration.

or $$k = \sqrt{\frac{I}{A}} \qquad \text{..... 14.4}$$

Radius of Gyration is a property of a given plane area. It can be defined as,

"*Radius of Gyration is the distance at which the given area is compressed and kept as a strip of negligible width, such that there is no change in its moment of inertia*". Radius of Gyration has the units of length i.e. m, cm or mm.

We will study in the chapter on columns that the load at which a structural member like a column or strut fails is linked to the radius of gyration K of the cross-sectional area of the member. Greater the radius of gyration higher is the load carrying capacity of the structural member.

14.5 Moment of Inertia from First Principles

Using the mathematical expression $I = \int r^2 dA$, let us find the moment of inertia of some geometrical figures.

Moment of Inertia of a Rectangle about an axis Passing Through its G and Parallel to its base.

Consider a rectangle of size b × d. Let the given axis pass through G and be parallel to the base b. Consider an elemental strip of width dy located at a distance y from the x axis.

Using $I = \int r^2 dA$

$$I_{xx_G} = \int_{-d/2}^{d/2} y^2 dA$$

$$= 2\int_0^{d/2} y^2 (b.dy)$$

$$= 2b\left(\frac{y^3}{3}\right)_0^{d/2} = \frac{2b}{3}\left[\left(\frac{d}{2}\right)^3 - 0\right]$$

$$\therefore \quad I_{xx_G} = \frac{bd^3}{12}$$

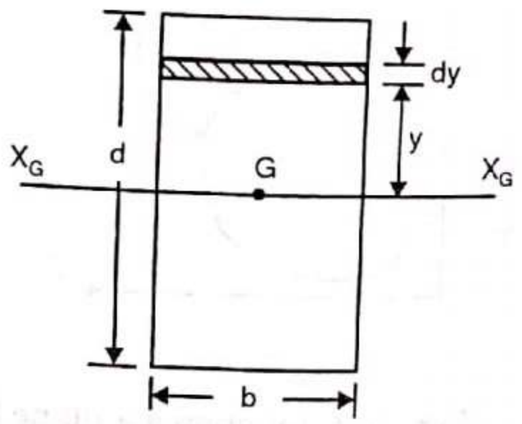

Fig. 14.7

Moment of Inertia of a Triangle about its Base

Consider a triangle of base b and altitude h. Consider an elemental strip of width dy and located at distance y from the base. The width of the strip by property of similar triangles

$$= \frac{b}{h}(h-y)$$

The area of the strip $dA = \frac{b}{h}(h-y).dy$

Using $I = \int r^2 dA$

$$I_{xx} = \int_0^h y^2 \frac{b}{h}(h-y)dy$$

$$= \frac{b}{h}\int_0^h y^2.h - y^3 dy$$

$$= \frac{b}{h}\left(\frac{y^3.h}{3} - \frac{y^4}{4}\right)_0^h$$

$$= \frac{b}{h}\left(\frac{h^4}{3} - \frac{h^4}{4}\right)$$

$$\therefore \quad I_{xx} = \frac{bh^3}{12}$$

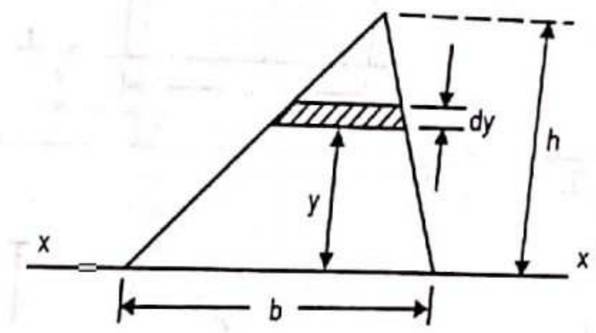

Fig. 14.8

Moment of Inertia of a Circle about an Axis Passing Through its Diameter

Consider a circle of radius R. Consider an elemental area of length $r\,d\theta$ and width dr. The area of element $dA = r\,d\theta.dr$

The perpendicular distance of the element from the x axis = $r \sin\theta$

Using $I = \int r^2 dA$

$$I_{xx_G} = \int_0^{2\pi}\int_0^R (r\sin\theta)^2.r\,d\theta.dr$$

$$= \int_0^{2\pi}\int_0^R r^3\left(\frac{1-\cos 2\theta}{2}\right).d\theta.dr$$

$$= \int_0^R \frac{r^3}{2}\left(\theta - \frac{\sin 2\theta}{2}\right)_0^{2\pi}.dr$$

$$= \left(\frac{1}{2}\times\frac{r^4}{4}\right)_0^R (2\pi - 0)$$

$$\therefore \quad I_{xx_G} = \frac{\pi R^4}{4}$$

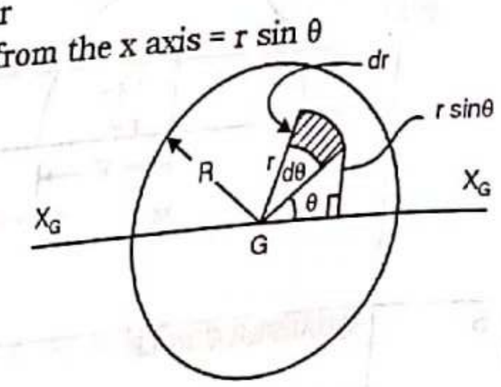

Fig. 14.9

Moment of Inertia of Regular Plane Areas

Sr. No	Figure	
1.	RECTANGLE 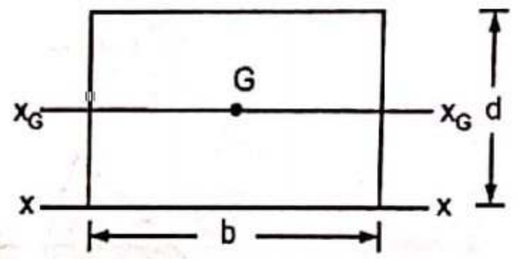	a) M.I about an axis parallel to side b and passing through the centroid $I_{xx_G} = \frac{bd^3}{12}$ b) M.I. about an axis passing through the side b $I_{xx} = \frac{bd^3}{3}$
2.	TRIANGLE 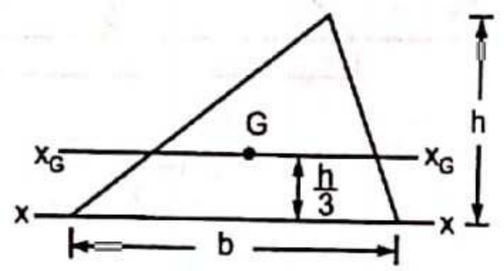	a) M.I. about an axis passing through the centroid and parallel to base b $I_{xx_G} = \frac{bh^3}{36}$ b) M.I. about an axis passing through the base b $I_{xx} = \frac{bh^3}{12}$
3.	CIRCLE 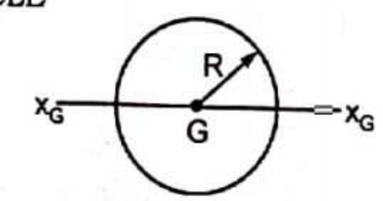	a) M.I. about an axis passing through the centroid $I_{xx_G} = \frac{\pi R^4}{4}$
4.	SEMICIRCLE 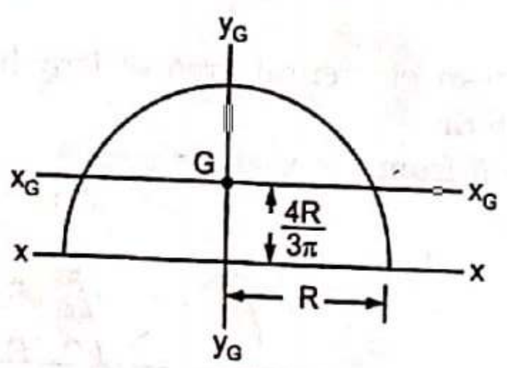	a) M.I. about an axis passing through the centroid and parallel to the base. $I_{xx_G} = 0.1097\ R^4$ b) M.I about an axis passing through the base $I_{xx} = \frac{\pi R^4}{8}$ c) M.I. about an axis passing through the centroid and ⊥ to the base. $I_{yy_G} = \frac{\pi R^4}{8}$
5.	QUARTER CIRCLE 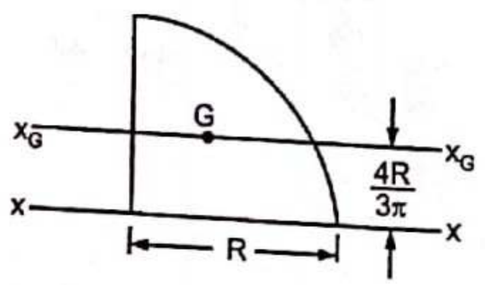	a) M.I about an axis passing through the centroid and parallel to the side of the quarter circle $I_{xx_G} = 0.0548\ R^4$ b) M.I. about an axis passing through the side of the quarter circle $I_{xx} = \frac{\pi R^4}{16}$

Table 14.1

14.6 Moment of Inertia of Composite Figures

A composite figure is not a regular area but a combination of regular figures. To find the moment of inertia of a composite figure about any axis, proceed as below.

Fig. 14.10 shows a shaded composite figure whose M.I. about xx axis is to be found out.

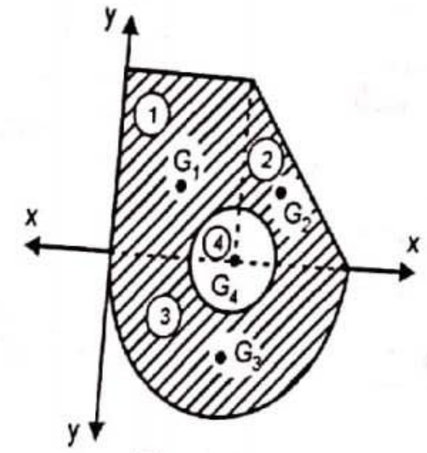

Fig. 14.10

Procedure.

1. Divide the composite figure into regular parts (In the above case we can divide the composite figure into a rectangle, triangle, semi-circle and circle)

2. Find M.I. of each part about the given axis (In the above case we have to find I_x^1, I_x^2, I_x^3 and I_x^4)

3. i. If the axis passes through the centroid of the part into consideration use the expression from the table 14.1 [In above case for the circle its centroid G_4 lies on the axis x-x $\therefore I_{xx}^4 = \frac{\pi R^4}{4}$]

   ii. For rectangle, triangle, quarter circle and semicircle if the axis passes through the sides we have ready expressions for M.I as discussed in table A.1 [In above case for rectangle, the axis x-x passes through its side]

   $\therefore \quad I_{xx}^1 = \frac{bd^3}{3}$

   Also the axis xx passes through the base of the triangle

   $\therefore \quad I_{xx}^2 = \frac{bh^3}{12}$

   Further the axis xx passes through the base of the semicircle

   $\therefore \quad I_{xx}^3 = \frac{\pi R^4}{8}$

4. If the axis does not pass through the centroid, nor any ready expression is applicable, then we use the parallel axis theorem.

5. The M.I of the entire composite figure is the sum of M.I of the individual parts. [In above case $I_{xx} = I_{xx}^1 + I_{xx}^2 + I_{xx}^3 - I_{xx}^4$]

Ex. 14.1 Find the M.I of the given composite figure about the x and y axis.

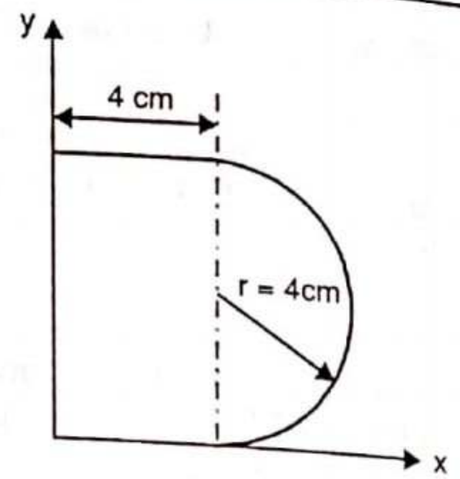

Solution: Dividing the entire composite figure in two parts viz.
part (1) rectangle, and
part (2) semi-circle

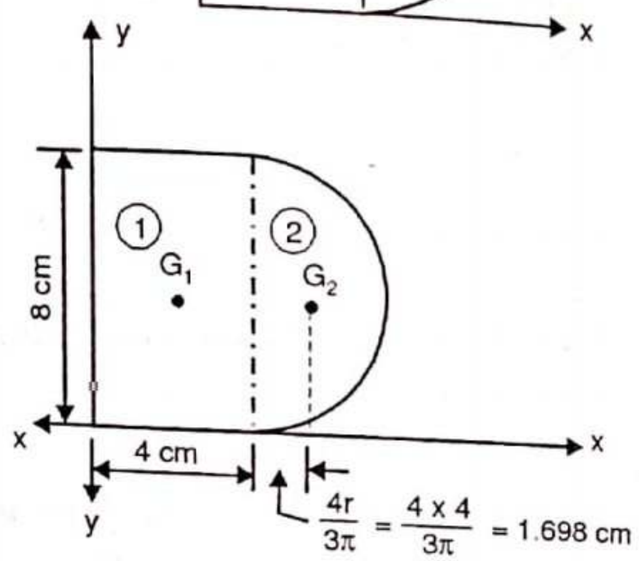

M.I @ xx axis

$$I^1_{xx} = \frac{bd^3}{3}$$

$$= \frac{4\times 8^3}{3} = 682.67 \text{ cm}^4$$

$$I^2_{xx} = I_G + A.r^2 = \left[\frac{\pi R^4}{8} + \left(\frac{\pi R^2}{2}\right).(4)^2\right]$$

$$= \left[\frac{\pi 4^4}{8} + \frac{\pi 4^2}{2}.(4)^2\right] = 502.65 \text{ cm}^4$$

Now $I_{xx} = I^1_{xx} + I^2_{xx}$

$I_{xx} = 682.67 + 502.65 = 1185.3 \text{ cm}^4$ ..... **Ans.**

M.I @ yy axis

$$I^1_{yy} = \frac{bd^3}{3} = \frac{8\times 4^3}{3} = 170.67 \text{ cm}^4$$

$$I^2_{yy} = I_G + A.r^2 = \left[0.1097R^4 + \left(\frac{\pi R^2}{2}\right).(4+1.698)^2\right] = \left[0.1097\times 4^4 + \frac{\pi 4^2}{2}.(5.698)^2\right]$$

$= 844.07 \text{ cm}^4$

Now $I_{yy} = I^1_{yy} + I^2_{yy}$

$I_{yy} = 170.67 + 844.07 = 1014.7 \text{ cm}^4$ ..... **Ans.**

Ex. 14.2 For the plane lamina shown,

a. Locate centroid
b. Find M.I. about X and Y axis and
c. Find M.I about centroidal axes.

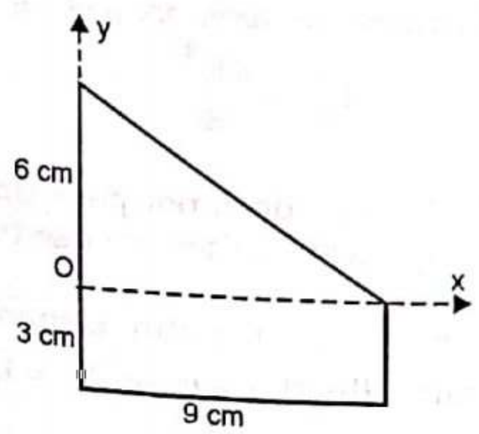

Solution:

a. C.G calculation

Dividing the given composite plane lamina into two parts. Part (1) Triangle and Part (2) Rectangle.

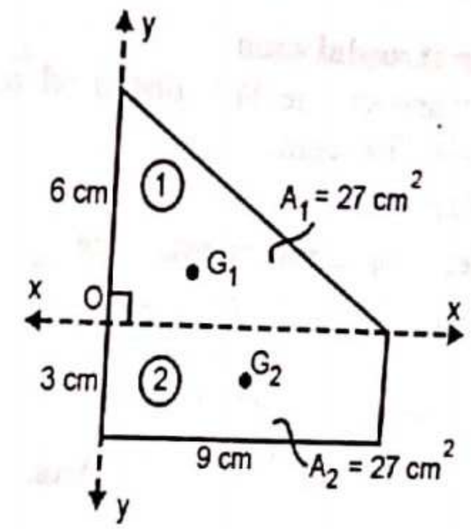

Part	Area A_i cm²	Co-ordinates X_i cm	Y_i cm	$A_i.X_i$ cm³	$A_i.Y_i$ cm³
1. Triangle	27	3	2	81	54
2. Rectangle	27	4.5	- 1.5	121.5	- 40.5
	$\Sigma A_i = 54$			ΣA_iX_i = 202.5	ΣA_iY_i = 13.5

Using $\overline{X} = \frac{\sum A_i X_i}{\sum A_i} = \frac{202.5}{54} = 3.75$ cm ..... **Ans.**

Using $\overline{Y} = \frac{\sum A_i Y_i}{\sum A_i} = \frac{13.5}{54} = 0.25$ cm ..... **Ans.**

$\therefore$ $\overline{X}, \overline{Y} = (3.75, 0.25)$ cm ..... **Ans.**

b. M.I calculations about xx and yy axis

M.I about xx axis

$$I^1_{xx} = \frac{bh^3}{12} = \frac{9\times 6^3}{12} = 162 \text{ cm}^4$$

$$I^2_{xx} = \frac{bd^3}{3} = \frac{9\times 3^3}{3} = 81 \text{cm}^4$$

$\therefore$ $I_{xx} = I^1_{xx} + I^2_{xx}$

$= 162 + 81 = 243 \text{ cm}^4$ ..... **Ans.**

M.I about yy axis

$$I^1_{yy} = \frac{bh^3}{12} = \frac{6\times 9^3}{12} = 364.5 \text{ cm}^4$$

$$I^2_{yy} = \frac{bd^3}{3} = \frac{3\times 9^3}{3} = 729 \text{cm}^4$$

$\therefore$ $I_{yy} = I^1_{yy} + I^2_{yy}$

$= 364.5 + 729 = 1093.5 \text{ cm}^4$ ..... **Ans.**

c. M.I. about centroidal axis

Let us now transfer the M.I. obtained about xx and yy axis to the centroidal axes using Parallel Axix Theorem.

M.I. about xx_G axis

From parallel axis theorem, we have,

$$I_{xx} = I_{xx_G} + \Sigma A \times r^2$$

$$243 = I_{xx_G} + 54 \times 0.25^2$$

$$\therefore I_{xx_G} = 239.62 \text{ cm}^4 \quad \text{..... Ans.}$$

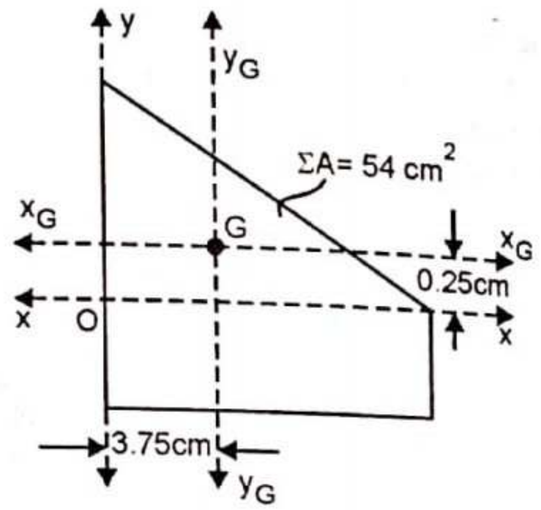

M.I. about yy_G axis

From parallel axis theorem, we have,

$$I_{yy} = I_{yy_G} + \Sigma A \times r^2$$

$$1093.5 = I_{yy_G} + 54 \times 3.75^2$$

$$\therefore I_{yy_G} = 334.12 \text{ cm}^4 \quad \text{..... Ans.}$$

Ex. 14.3 For the plane lamina shown, find M.I about centroidal axes.

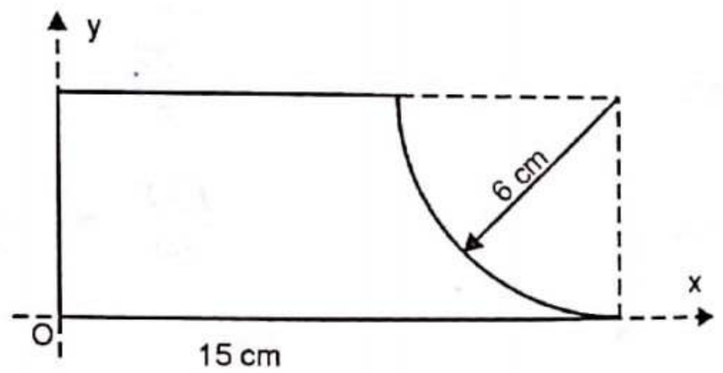

Solution: The given lamina can be obtained by taking a rectangle and subtracting a quarter circle from it.

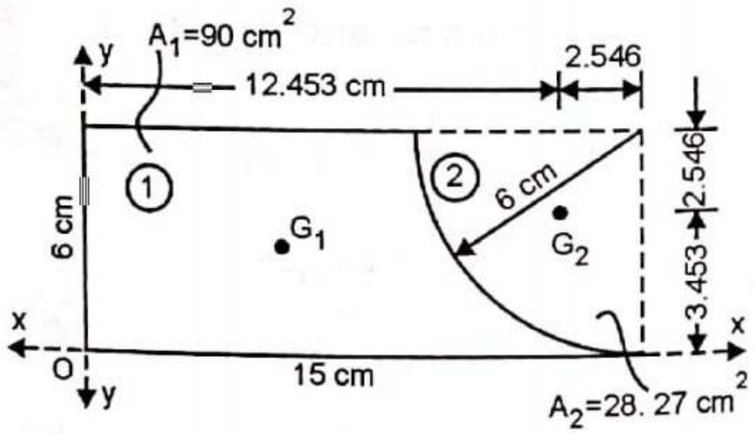

C.G calculation

Part	Area A_i cm²	Co-ordinates X_i cm	Co-ordinates Y_i cm	$A_i.X_i$ cm³	$A_i.Y_i$ cm³
1. Rectangle	90	7.5	3	675	270
2. Quarter circle.	– 28.27	12.453	3.453	– 352	– 97.65
	$\Sigma A_i = 61.73$			$\Sigma A_iX_i = 323$	$\Sigma A_iY_i = 172.35$

Using $\overline{X} = \dfrac{\sum A_i X_i}{\sum A_i} = \dfrac{323}{61.73} = 5.23$ cm

Using $\overline{Y} = \dfrac{\sum A_i Y_i}{\sum A_i} = \dfrac{172.35}{67.73} = 2.79$ cm $\quad \therefore \overline{X}, \overline{Y} = (5.23, 2.79)$ cm

M.I calculations

Though we need to find M.I. about centroidal XX_G and YY_G axis, Let us first find M.I. about XX and YY axis.

M.I. about xx axis.

$$I^1_{xx} = \frac{bd^3}{3} = \frac{15 \times 6^3}{3} = 1080 \text{ cm}^4$$

$$I^2_{xx} = I_G + A \times r^2 = 0.0548 \times R^4 + A \times r^2$$

$$= 0.0548 \times 6^4 + 28.27 \times 3.453^2 = 408.1 \text{ cm}^4$$

$$\therefore I_{xx} = I^1_{xx} - I^2_{xx}$$

$$= 1080 - 408.1 = 671.9 \text{ cm}^4$$

M.I about yy axis

$$I^1_{yy} = \frac{bd^3}{3} = \frac{6 \times 15^3}{3} = 6750 \text{ cm}^4$$

$$I^2_{yy} = I_G + A \times r^2 = 0.0548 \times R^4 + A \times r^2$$

$$= 0.0548 \times 6^4 + 28.27 \times 12.453^2 = 4455 \text{ cm}^4$$

$$\therefore I_{yy} = I^1_{yy} - I^2_{yy}$$

$$= 6750 - 4455 = 2295 \text{ cm}^4$$

Let us now transfer the M.I. obtained about xx and yy axis to the centroidal axes using Parallel Axix Theorem.

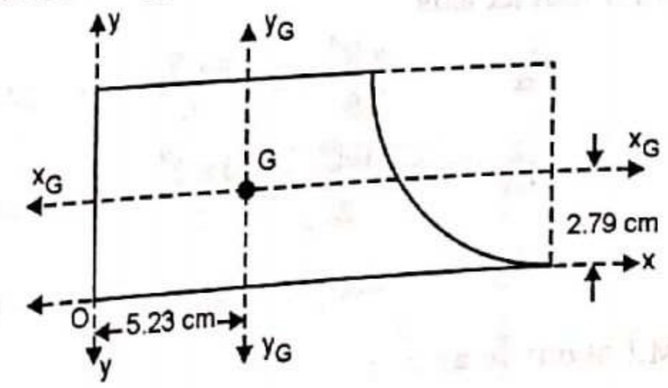

M.I. about xx_G axis

From parallel axis theorem, we have,

$$I_{xx} = I_{xx_G} + \Sigma A \times r^2$$

$$671.9 = I_{xx_G} + 61.73 \times 2.79^2$$

$$\therefore I_{xx_G} = 191.39 \text{ cm}^4 \quad \text{..... Ans.}$$

M.I. about yy_G axis

From parallel axis theorem, we have,

$$I_{yy} = I_{yy_G} + \Sigma A \times r^2$$

$$2295 = I_{yy_G} + 61.73 \times 5.23^2$$

$$\therefore I_{yy_G} = 606.5 \text{ cm}^4 \quad \text{..... Ans.}$$

Ex. 14.4 Find M.I and radius of gyration about centroidal axes for the plane composite figure shown.

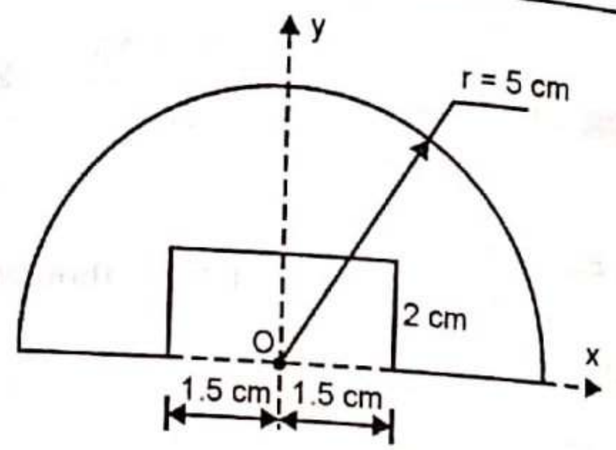

Solution: Let us first locate the centroid G of the lamina. The given lamina can be obtained by taking a semi circle and subtracting a rectangle from it. Also since the figure is symmetrical w.r.t yy axis, centroid G lies on it. This implies $\overline{X} = 0$

C.G calculation

Part	Area A_i cm²	Y_i cm	$A_i.Y_i$ cm³
1. Semi circle	39.27	2.122	83.33
2. Rectangle	- 6	1	- 6
	ΣA_i = 33.27		ΣA_iY_i = 73.33

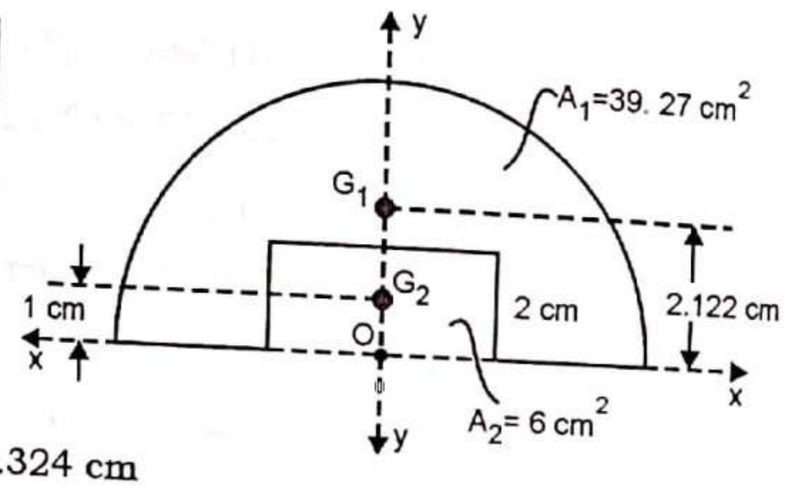

Using $\overline{Y} = \dfrac{\sum A_i Y_i}{\sum A_i} = \dfrac{73.33}{33.27} = 2.324$ cm

$\therefore \quad \overline{X}, \overline{Y} = (0, 2.324)$ cm

M.I calculations

Though we need to find M.I. about centroidal XX_G and YY_G axis, Let us first find M.I. about XX and YY axis.

M.I about xx axis

$$I^1_{xx} = \frac{\pi R^4}{8} = \frac{\pi \times 5^4}{8} = 245.4\,\text{cm}^4$$

$$I^2_{xx} = \frac{bd^3}{3} = \frac{3 \times 2^3}{3} = 8\ \text{cm}^4$$

$$\therefore \quad I_{xx} = I^1_{xx} - I^2_{xx} = 245.4 - 8 = 237.4\ \text{cm}^4$$

M.I about yy axis

$$I^1_{yy} = \frac{\pi R^4}{8} = \frac{\pi \times 5^4}{8} = 245.4\ \text{cm}^4$$

$$I^2_{yy} = \frac{bd^3}{3} = \frac{2 \times 3^3}{12} = 4.5\ \text{cm}^4$$

$$\therefore \quad I_{yy} = I^1_{yy} - I^2_{yy} = 245.5 - 4.5 = 240.9\ \text{cm}^4$$

Let us now transfer the M.I. obtained about xx and yy axis to the centroidal axes using Parallel Axix Theorem.

M.I. about xx_G axis

From parallel axis theorem, we have,

$$I_{xx} = I_{xx_G} + \Sigma A \times r^2$$

$$237.4 = I_{xx_G} + 33.27 \times 2.324^2$$

$$\therefore \quad I_{xx_G} = 57.71\ \text{cm}^4 \quad \text{..... Ans.}$$

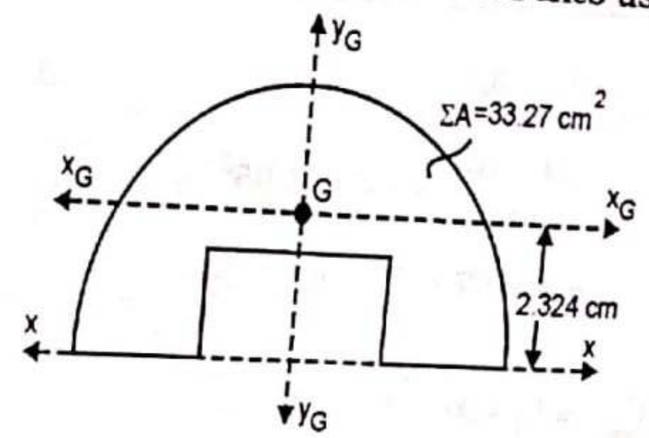

Also $I_{yy_G} = I_{yy} = 240.9$ cm⁴ ..... since G lies on yy axis. ..... **Ans.**

Radius of gyration w.r.t the horizontal centroidal axis i.e.

$$K_{xx_G} = \sqrt{\frac{I_{xx_G}}{A}} = \sqrt{\frac{57.71}{33.27}} = 1.317\ \text{cm}$$

Radius of gyration w.r.t vertical centroidal axis

$$K_{yy_G} = \sqrt{\frac{I_{yy_G}}{A}} = \sqrt{\frac{240.9}{33.27}} = 2.691\ \text{cm}$$

..... **Ans.**

Ex. 14.5 Find moment of inertia of the symmetrical I section about the centroidal x and y axis.

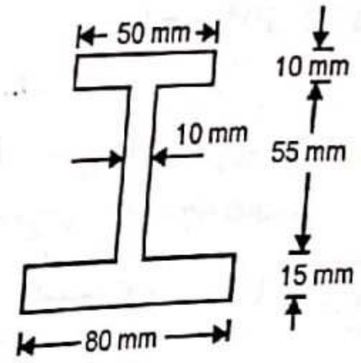

Solution: C.G. calculation (w.r.t base).

The given section is symmetrical w.r.t y axis. The centroid G lies on the y axis. We need to find the y coordinate of G w.r.t the base.

Part	Area A_i mm²	Y_i mm	$A_i.Y_i$ mm³
1. Top Flange	50 × 10 = 500	75	37500
2. Web	10 × 55 = 550	42.5	23375
3. Bottom Flange	80 × 15 = 1200	7.5	9000
	ΣA_i = 2250		ΣA_iY_i = 69875

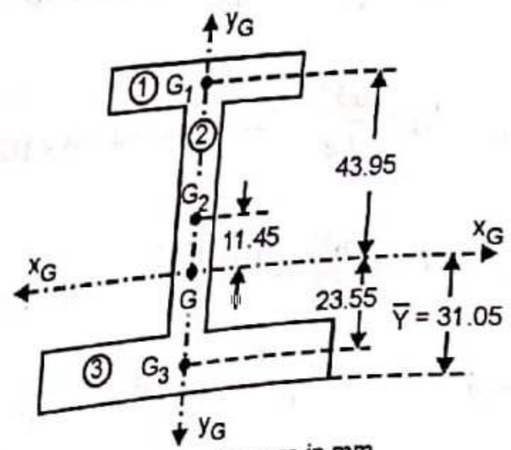

All dimensions are in mm

Using $\overline{Y} = \dfrac{\sum A_i Y_i}{\sum A_i} = \dfrac{69875}{2250} = 31.05$ mm

The centroidal xx_G and yy_G axes are marked as shown.

M.I calculations (about centroidal xx_G axis)

$$I^1_{xx_G} = I_G + Ar^2 = \frac{50\times10^3}{12} + 500\times43.95^2 = 969.97\times10^3 \text{ mm}^4$$

$I_G = \frac{bd^3}{12}$, $A = 500 \text{ mm}^2$

r = dist. between G and G_1 = 43.95 mm

$$I^2_{xx_G} = I_G + Ar^2 = \frac{10\times55^3}{12} + 550\times11.45^2 = 210.75\times10^3 \text{ mm}^4$$

$I_G = \frac{bd^3}{12}$, $A = 550 \text{ mm}^2$

r = dist. between G and G_2 = 11.45 mm

$$I^3_{xx_G} = I_G + Ar^2 = \frac{80\times15^3}{12} + 1200\times23.55^2 = 688.02\times10^3 \text{ mm}^4$$

$I_G = \frac{bd^3}{12}$

$A = 1200 \text{ mm}^2$

r = dist. between G and G_3 = 23.55 mm

Now $I_{xx_G} = I^1_{xx_G} + I^2_{xx_G} + I^3_{xx_G}$

$= 969.97\times10^3 + 210.75\times10^3 + 688.02\times10^3$

$\therefore$ $\boxed{I_{xx_G} = 1.868\times10^6 \text{ mm}^4}$ ..... **Ans.**

M.I calculations (about yy_G axes)

$$I^1_{yy_G} = I_G = \frac{bd^3}{12} = \frac{10\times50^3}{12} = 104\times10^3 \text{ mm}^4$$

$$I^2_{yy_G} = I_G = \frac{bd^3}{12} = \frac{55\times10^3}{12} = 4.58\times10^3 \text{ mm}^4$$

$$I^3_{yy_G} = I_G = \frac{bd^3}{12} = \frac{15\times80^3}{12} = 640\times10^3 \text{ mm}^4$$

For Part 1, 2 and 3, yy_G axis passes through the centroid of all the parts. Hence self M.I. formula is being used.

Now $I_{yy_G} = I^1_{yy_G} + I^2_{yy_G} + I^3_{yy_G}$

$= 104.17\times10^3 + 4.58\times10^3 + 640\times10^3$

$\therefore$ $I_{yy_G} = 748.75\times10^3 \text{ mm}^4$ ..... **Ans.**

Ex. 14.6 Find moment of inertia of the shaded area shown in the figure about x axis and y axis.

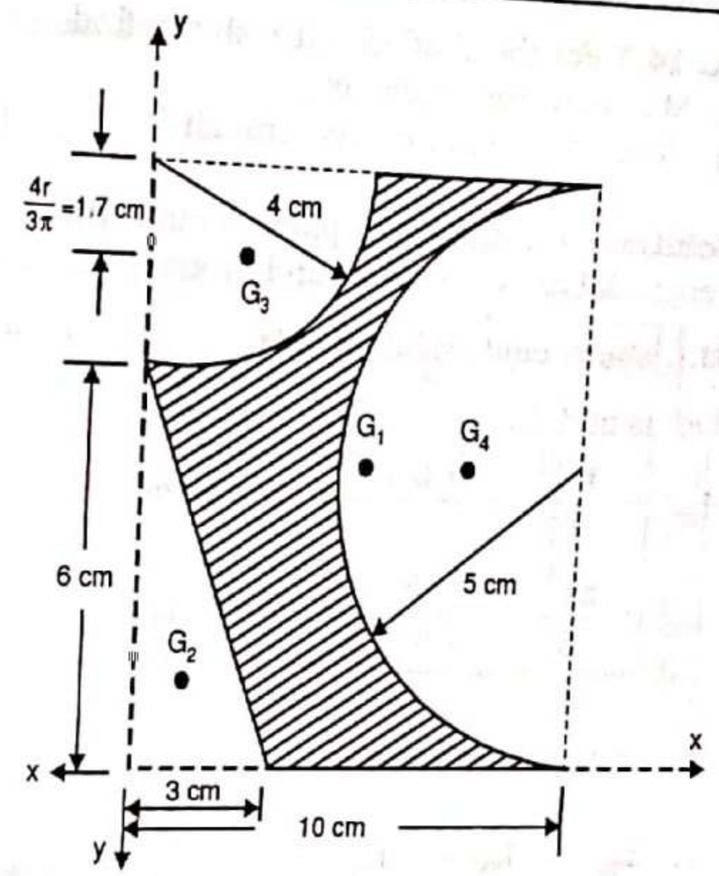

Solution: The given composite shaded portion can be formed by,

Taking a square of 10 cm × 10 cm

Subtracting a rt. angled triangle of 3 cm × 6 cm.

Subtracting a quarter circle of R = 4 cm

Subtracting a semi circle of R = 5 cm.

Calculation of M.I about xx axis.

$$I^1_{xx} = \frac{bd^3}{3} = \left[\frac{10\times10^3}{3}\right] = 3333.3 \text{ cm}^4$$

$$I^2_{xx} = \frac{bh^3}{12} = \left[\frac{3\times6^3}{12}\right] = 54 \text{ cm}^4$$

$$I^3_{xx} = I_G + A.r^2$$

$$= \left[0.0548\times R^4 + A.r^2\right] = \left[0.0548\times4^4 + \frac{\pi.4^2}{4}\times8.3^2\right] = 879.7 \text{ cm}^4$$

$$I^4_{xx} = I_G + A.r^2 = \left[\frac{\pi R^4}{8} + A.r^2\right] = \left[\frac{\pi5^4}{8} + \left(\frac{\pi5^2}{2}\right)\times5^2\right] = 1227.2 \text{ cm}^4$$

$\therefore$ $I_{xx} = I^1_{xx} - I^2_{xx} - I^3_{xx} - I^4_{xx}$

$= 3333.3 - 54 - 879.7 - 1227.2$

$I_{xx} = 1172.4 \text{ cm}^4$ ..... **Ans.**

Calculation of M.I @ yy axis

$$I^1_{yy} = \frac{bd^3}{3} = \frac{10\times10^3}{3} = 3333.3 \text{ cm}^4$$

$$I^2_{yy} = \frac{bh^3}{12} = \frac{6\times3^3}{12} = 13.5 \text{ cm}^4$$

$$I^3_{yy} = \frac{\pi R^4}{16} = \frac{\pi4^4}{16} = 50.26 \text{ cm}^4$$

$$I^4_{yy} = I_G + A.r^2 = \left[0.1097R^4 + A.r^2\right] = \left[0.1097\times5^4 + \left(\frac{\pi5^2}{2}\right)\times7.878^2\right] = 2505.8 \text{ cm}^4$$

$\therefore$ $I_{yy} = I^1_{yy} - I^2_{yy} - I^3_{yy} - I^4_{yy}$

$= 3333.3 - 13.5 - 50.26 - 2505.8$

$\therefore$ $I_{yy} = 763.7 \text{ cm}^4$ ..... **Ans.**

Ex. 14.7 For the shaded figure shown find
a) M.I about centroidal axis.
b) Polar M.I about an axis through O

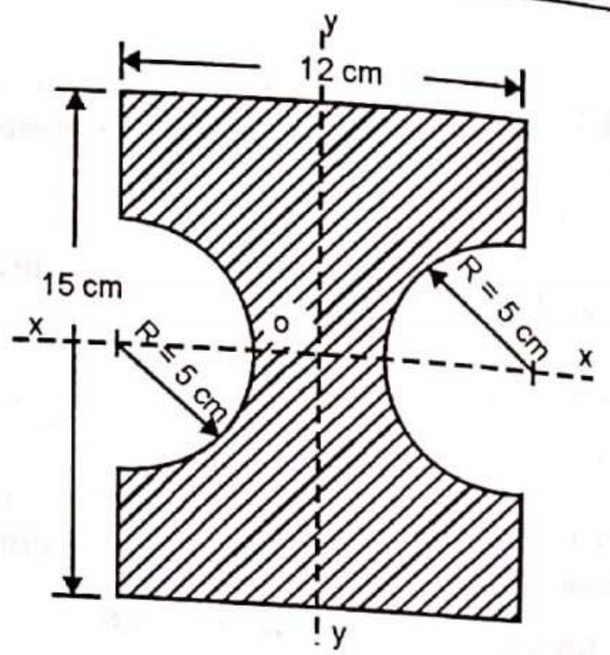

Solution: For the given plane lamina the centroidal axes are the xx and yy axis

M.I. about centroidal xx axis

Let us find I_{xx}

$$I^1_{xx} = \frac{bd^3}{12} = \frac{12\times15^3}{12} = 3375 \text{ cm}^4$$

$$I^2_{xx} = \frac{\pi r^4}{8} = \frac{\pi\times5^4}{8} = 245.4 \text{ cm}^4$$

$$I^3_{xx} = I^2_{xx} = 245.4 \text{ cm}^4$$

$$\therefore\ I_{xx} = I^1_{xx} - I^2_{xx} - I^3_{xx}$$
$$= 3375 - 245.4 - 245.4$$
$$\therefore\ I_{xx} = 2884.2 \text{ cm}^4 \text{ ..... } \textbf{Ans.}$$

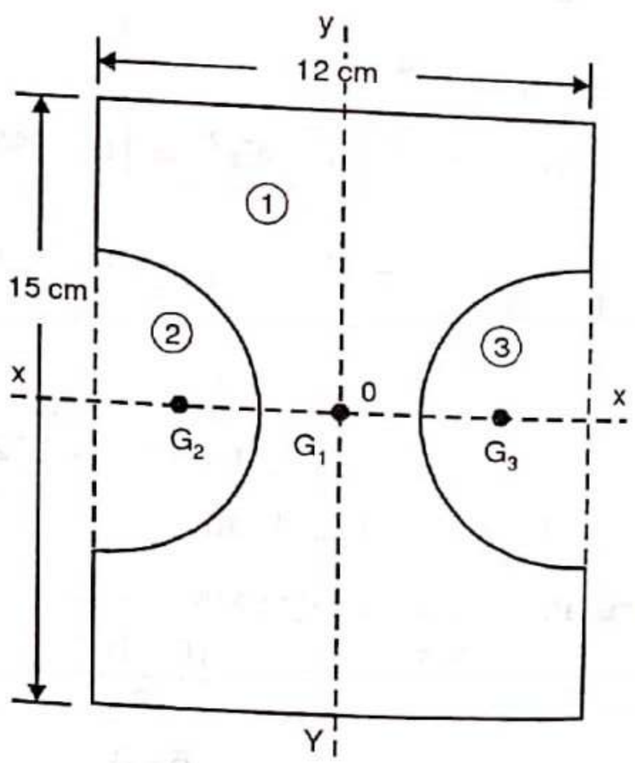

M.I. about centroidal yy axis

$$I^1_{yy} = \frac{bd^3}{12} = \frac{15\times12^3}{12} = 2160 \text{ cm}^4$$

$$I^2_{yy} = I_G + A.r^2$$
$$= 0.1097\times R^4 + A.r^2$$
$$= 0.1097\times5^4 + \left(\frac{\pi.5^2}{2}\right)\times3.878^2$$
$$= 659.1 \text{ cm}^4$$

$$I^3_{yy} = I^2_{yy} = 659.1 \text{ cm}^4$$

$$\therefore\ I_{yy} = I^1_{yy} - I^2_{yy} - I^3_{yy}$$
$$= 2160 - 659.1 - 659.1$$
$$\therefore\ I_{yy} = 841.8 \text{ cm}^4 \text{ ..... } \textbf{Ans.}$$

The two perpendicular axes meeting at O are the x and y axes. We will therefore use the perpendicular axes theorem to find polar moment of inertia J_O.
Using perpendicular axes theorem

$$J_O = I_{xx} + I_{yy}$$
$$= 2884.2 + 841.8$$
$$\therefore\ J_O = 3726 \text{ cm}^4 \text{ ..... } \textbf{Ans.}$$

Excersise 14.1

P1. Fill moment of inertia values in the blanks.
All dimensions are in 'cm' units.

a) For the given rectangular lamina of sides 4 cm x 7cm, determine its moment of inertia w.r.t. axis,

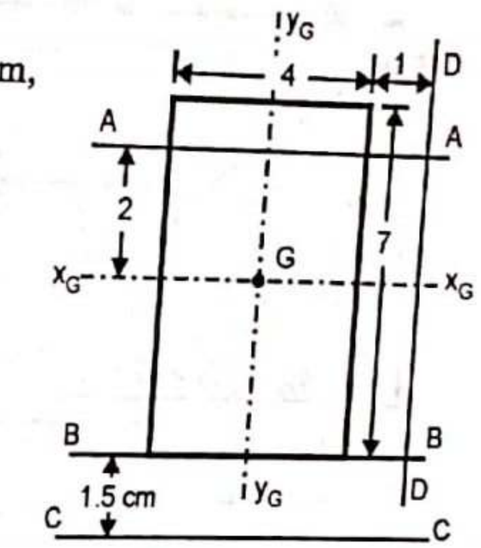

i) Axis XX_G = I_{XXG} = 114.3 cm⁴
ii) Axis YY_G = I_{YYG} = _____
iii) Axis AA = I_{AA} = _____
iv) Axis BB = I_{BB} = _____
v) Axis CC = I_{CC} = _____
vi) Axis DD = I_{DD} = _____

b) For the given right angle triangle of base 6 cm and height 15 cm, its moment of inertia w.r.t. axis,

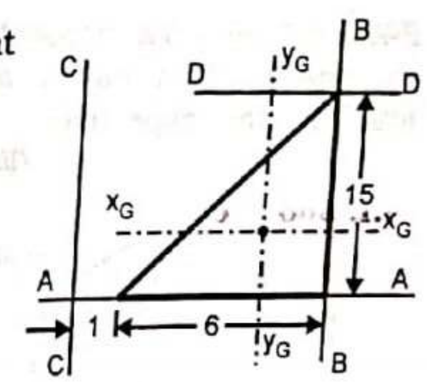

i) Axis XX_G = I_{XXG} = 562.5 cm⁴
ii) Axis YY_G = I_{YYG} = _____
iii) Axis AA = I_{AA} = _____
iv) Axis BB = I_{BB} = _____
v) Axis CC = I_{CC} = _____
vi) Axis DD = I_{DD} = _____

c) For the given semi circular lamina of 5 cm radius, its moment of inertia w.r.t. axis,

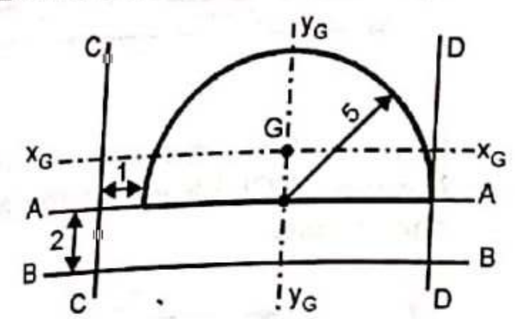

i) Axis XX_G = I_{XXG} = 68.56 cm⁴
ii) Axis YY_G = I_{YYG} = _____
iii) Axis AA = I_{AA} = _____
iv) Axis BB = I_{BB} = _____
v) Axis CC = I_{CC} = _____
vi) Axis DD = I_{DD} = _____

d) For the given quarter-circular lamina of 3 cm radius, its moment of inertia w.r.t. axis,

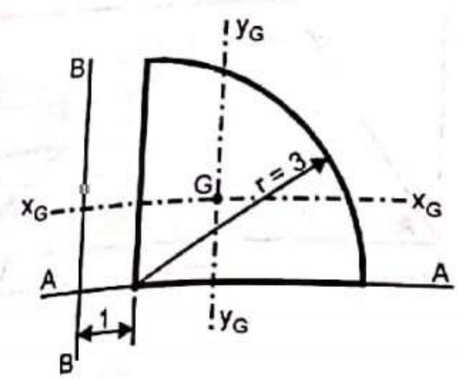

i) Axis XX_G = I_{XXG} = 4.439 cm⁴
ii) Axis YY_G = I_{YYG} = _____
iii) Axis AA = I_{AA} = _____
iv) Axis BB = I_{BB} = _____

P2. Find moment of inertia about x and y axis. ***(NMIMS July 16)***

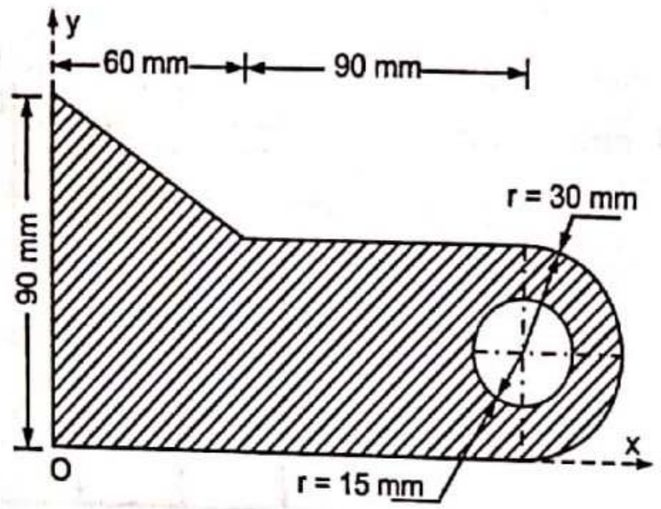

P3. Evaluate moment of inertia of the shaded area w.r.to x and y axis. ***(VJTI Nov 15)***

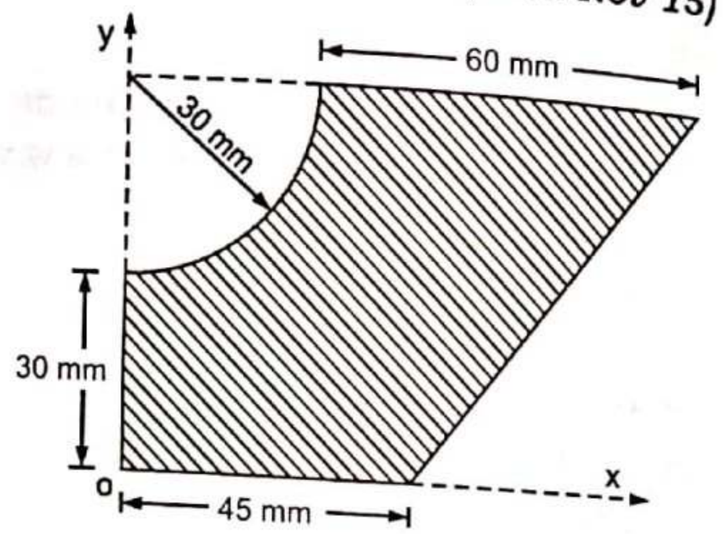

P4. Find the area moment of inertia of the shaded area shown, about the XX and YY axes respectively. ***(VJTI May 08)***

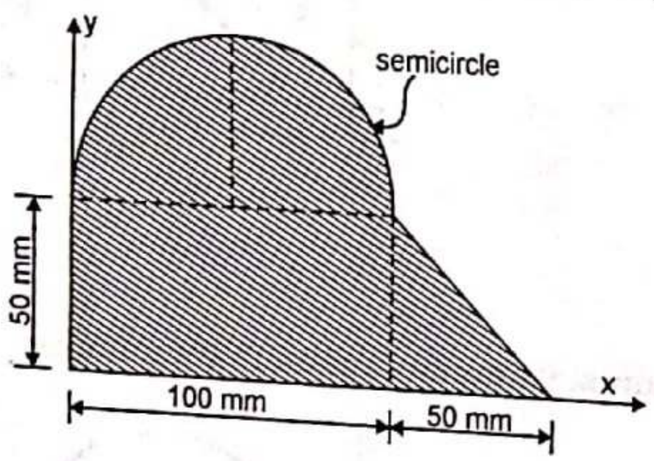

P5. Find moment of inertia of the symmetrical T section about the centroidal x and y axis.

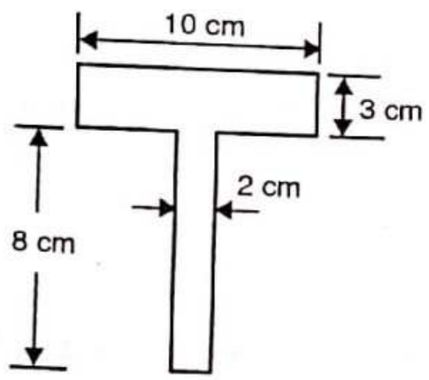

P6. Obtain moment of inertia of the lamina ABCDEF about the xx axis and the yy axis.

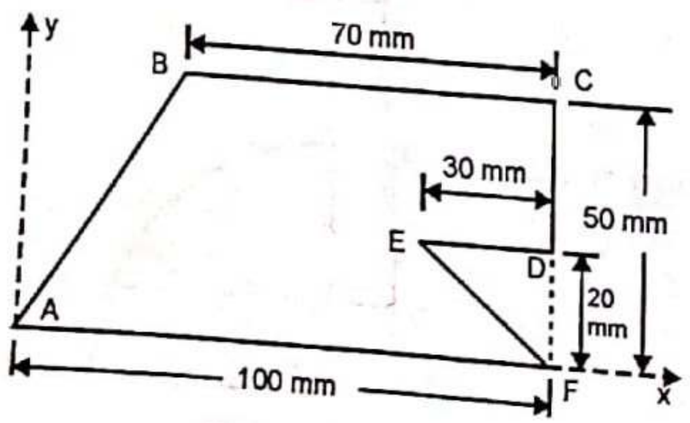

P7. Determine M.I. of the rectangle w.r.t. xx axis.

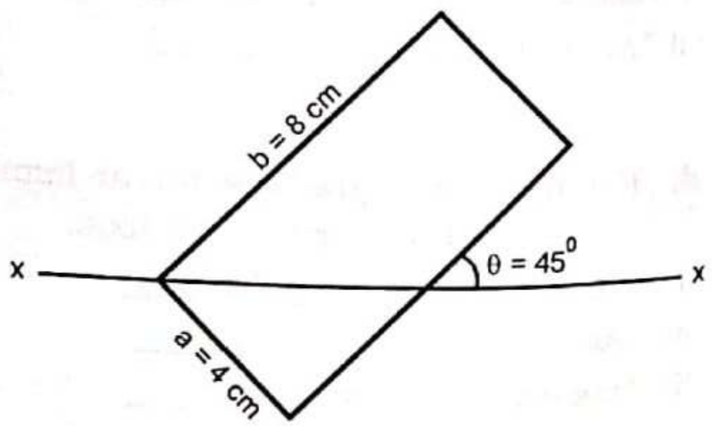

P8. A semi-circular area is removed from a trapezoid as shown. Determine the moment of inertia about the x and y axis.

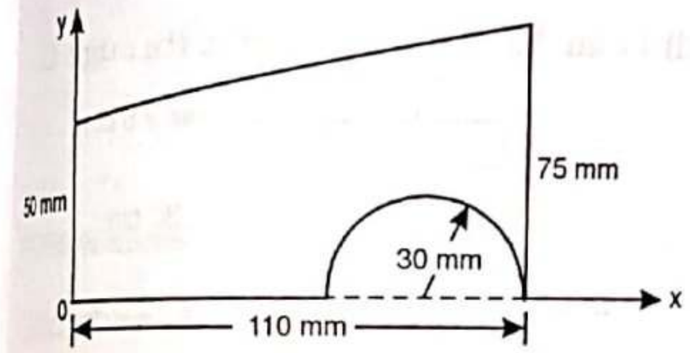

P9. Find the M.I. of the shaded area shown in figure about the xx and yy axes respectively. ***(VJTI Dec 13)***

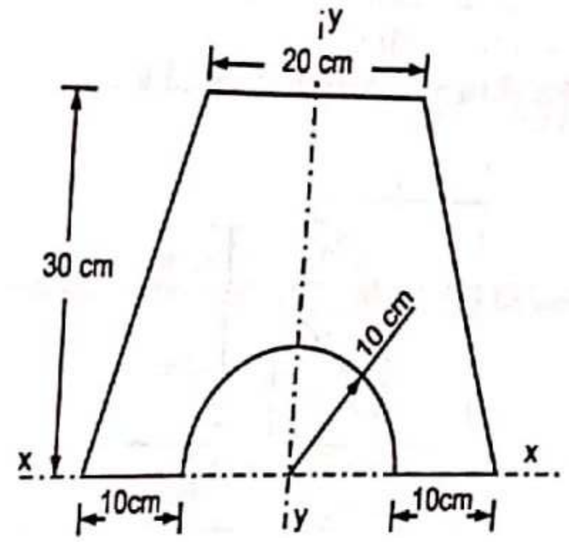

P10. Compute the moment of inertia of the shaded area about x–x and y–y axis as shown in the figure. ***(NMIMS May 09)***

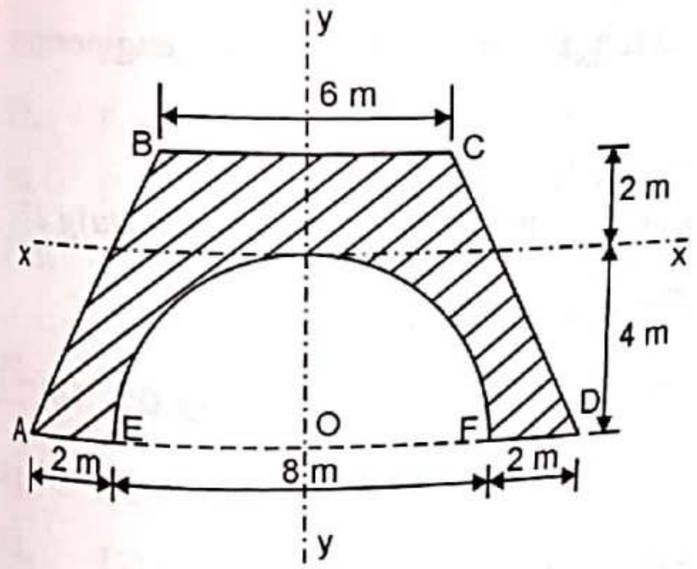

P11. Determine the M.I. of the beams cross sectional area shown in figure about the x and y centroidal axes. ***(VJTI Nov 16)***

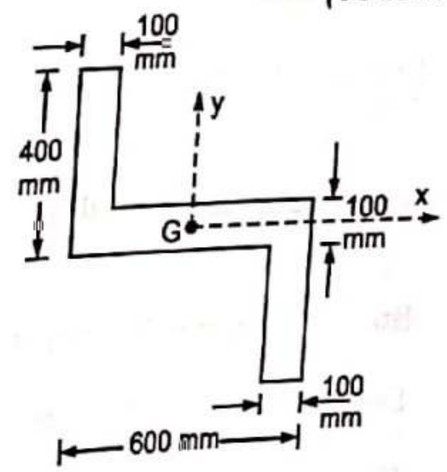

P12. Find moment of inertia about the x and y axis also find moment of inertia about centroidal x and y axis. ***(NMIMS Feb 12)***

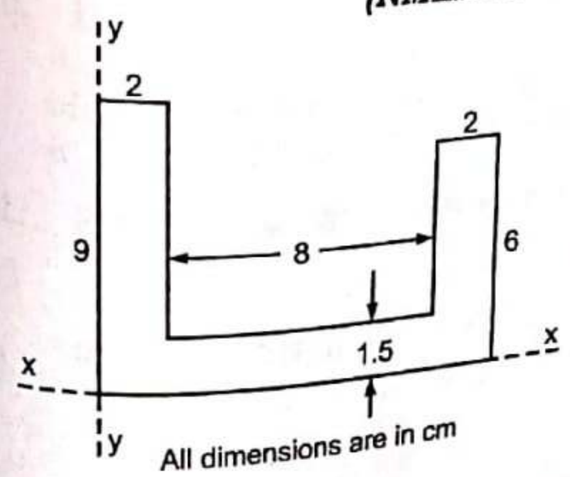

P13. Find the moment of of inertia of the shaded area about centroidal X axis and Y axis.

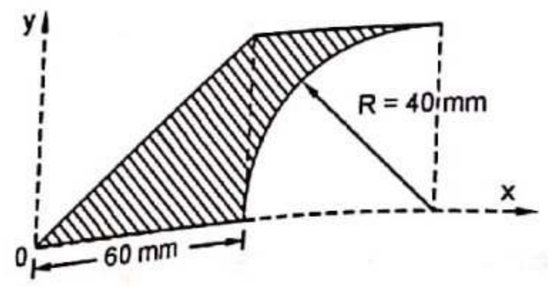

P14. For the shaded figure shown find

a. I_{xx} and I_{yy}

b. Polar moment of inertia about an axis through O.

c. Radius of gyration k_{xx} and k_{yy}.

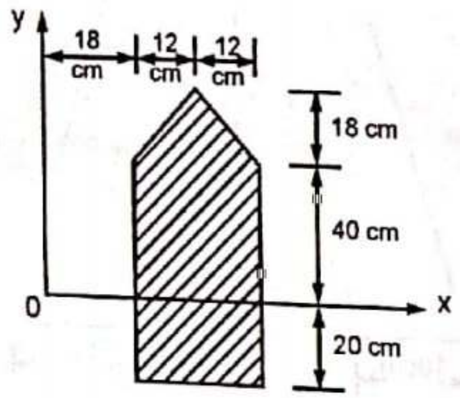

P15. a) Locate Centroid G.

b) Find moment of inertia of the I-section about xx and yy axes passing through the centroid

c) Calculate k_{x_G}

d) Polar M.I. about an axis through G.

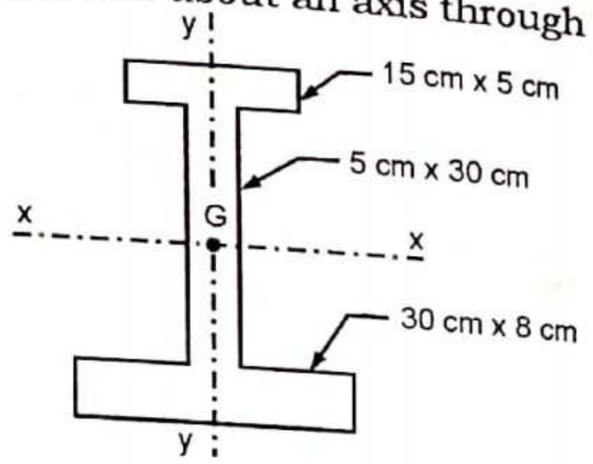

Exercise 14.2

Theory Questions

Q.1 Explain the term "Moment of Inertia". What is its application in engineering field.

Q.2 State theorem of Parallel Axis with a neat sketch.

(VJTI May 10, Dec 11, NMIMS July 16))

Q.3 State and prove the Perpendicular Axis Theorem. ***(VJTI Nov 15)***

Q.4 Define 'Radius of Gyration' and state its importance. ***(VJTI May 09, 10)***

Q.5 Explain Polar Moment of Inertia.

Q.6 From the first principles find moment of inertia of

a. Rectangle about centroidal axis parallel to its base. ***(VJTI Apr 11)***

b. Triangle about an axis passing through its base ***(VJTI Dec 13)***

★ ★ ★

Answers

Chapter 2

Exercise 2.1

P1. a) 38.3 N →, 32.14 N ↑ b) 222.3 N ←, 610.8 N ↓ c) 655.3 N ←, 458.9 N ↓ d) 17.32 kN ←, 10 kN ↓ e) 256.5 N ←, 704.8 N ↓ f) 34.2 N →, 93.97 N ↑ g) 68.4 N →, 187.9 N ↑ h) 8.71 N →, 99.62 N ↑

P2. a) 30 Nm, – 40 Nm b) 40 Nm, 180 Nm, c) –120 Nm d) 0, 240 Nm, e) 227.78 Nm, 130 .16 Nm, 0

P3. R = 94.28 N at θ = 72.82° ↗

P4. R = 59.05 kN, θ = 53.91° ↘

P5. R = 29.08 N at θ = 45.87° ↗

P6. P = 81 N, Q = 10.64 N

P7. P = 1333 N, θ = 70.53° ↖

P8. α = 21.8°, R = 229.29 N ↓

P9. F = 216.65 N, θ = 47.6°

P10. F_4 = 961.62 N at θ = 39.58° ↘

P11. F_1 = 434.5 N, θ = 67°

Exercise 2.2

P1. R = 12 kN ↓ at ⊥ distance d = 1.28 m right of A

P2. R = 7 kN ← at ⊥ distance d = 3.14 m above B.

P3. i) R = 180 N ↓ at ⊥ dist. d = 1.222 m right of A ii) R = 180 N ↓ & M = 40 Nm ↻

P4. 120 N and 180 N

P5. Resultant is a couple of 104 kNm ↺

P6. M = 2300 Nm ↺

P7. Resultant is a couple of 20 Nm ↻

P8. 26.25 N ↓ at B and 11.25 N ↑ at C

P9. 3000 N ↑ at O and 4000 N ↓ at A

P10. i. R = 10 kN ↓ at ⊥ distance d = 1.4 m to right of A.

ii. Single force at A = 10 kN ↓ and couple at A = 14 kNm ↻

iii. Single force at D = 10 kN ↓ and couple at D = 46 kNm ↺

iv. 15.33 kN ↓ at B and 5.33 ↑ kN at D.

P11. R = 90 kN ↓ at ⊥ distance d = 18 m right of A

Exercise 2.3

P1. R = 91.06 kN, θ = 55.44° ↘ acts at ⊥ distance d = 3.029 m right of O.

P2. R = 164N, θ = 37.57° ↘, x = 4.4m

P3. a) R = 2671.2 N at θ = 80.3° ↙ at ⊥ distance d = 139.17 mm to left of O
b) x = 14.12 cm left of O

P4. R = 3.587 KN, θ = 54.74° ↙ acts at ⊥ distance d = 3.942 m left of B

P5. a) R = 72.18 N at θ = 19.44° ↙ at ⊥ distance d = 6.465 cm right of A.
b) x = 19.408 cm right of A.

P6. R = 131.4N, θ = 31.38° ↘ cuts AB at x = 10.82 m right of A

P7. a) R = 5.38 kN at θ = 48° ↙ at ⊥ d = 2.76 m left of A b) 4.124 m
c) R = 5.38 kN at θ = 48° ↙ and M = 14.84 kNm ↺

P8. R = 272 N at θ = 72.9° ↙ and M = 160 Nm ↻

P9. R = 224.47 N at θ = 41.93° ↘ and M = 2159 Nm ↻

P10. R = 21.96 N at θ = 45.8° ↖ cuts the x-axis at 6.73 m

P11 R = 921.95 N, θ = 77.47° ↙ M = 3200 Nm ↻

P12. a) R = 332.4 N at θ = 12.11° cuts the x axis at 6.92 m left of O.
b) R = 332.4 N at θ = 12.11° ↖ and M = 485.3 Nm ↻

P13. M = 1.2 kNm

P14. R = 341.5 N at θ = 64.79° ↗ cuts the x axis at 17.23 cm right of O.

P15. R = 305.3 N at θ = 31.6° ↘ at ⊥ d = 24.89 cm left of A

P16. P_2 = 901 N , P_3 = 1675.7 N

P17. R = 16.15 kN at θ = 68.2° ↘ cuts the centre line AB at 1.13 m from A

Chapter 3

Exercise 3.1

P1.

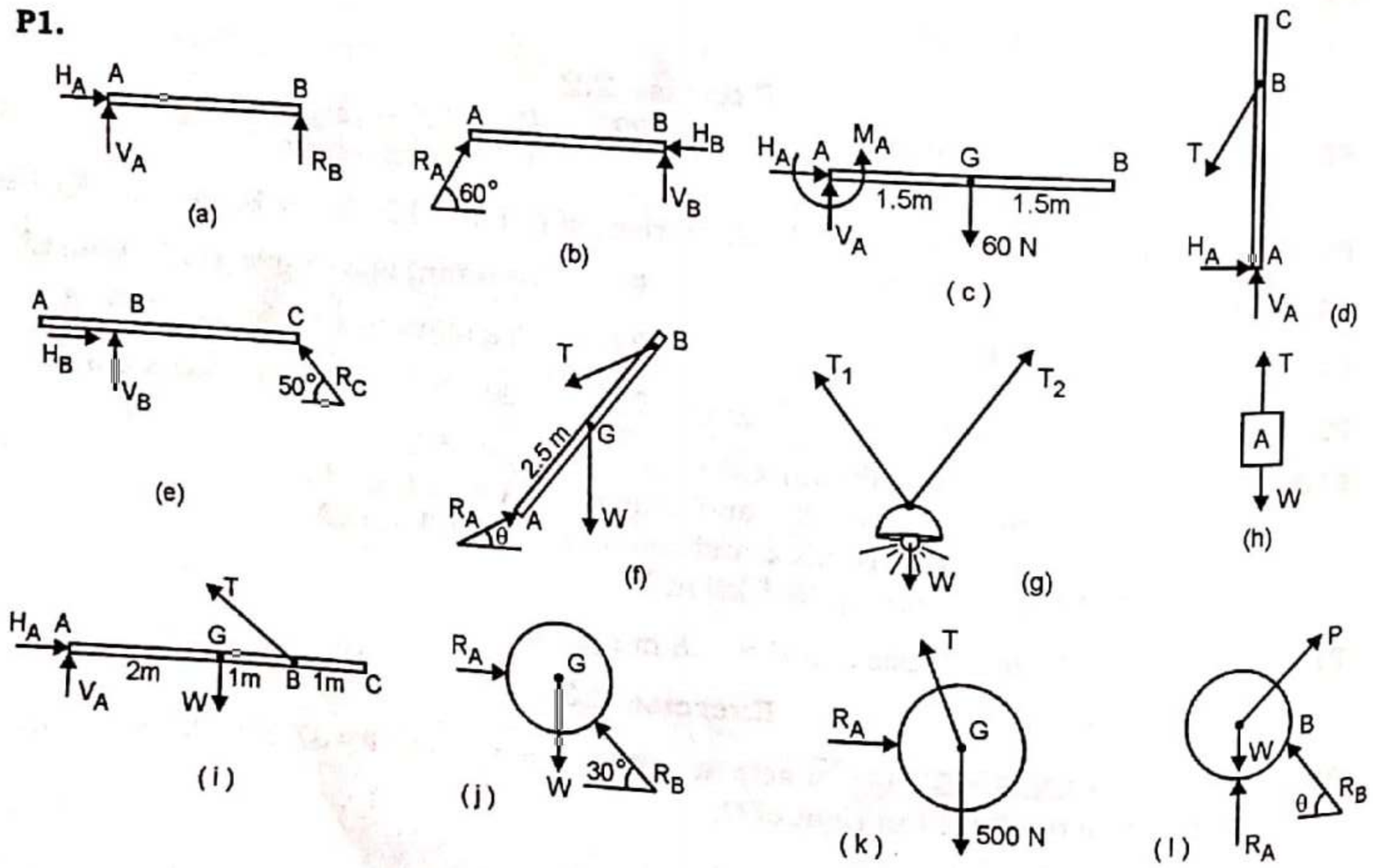

P2. H_A = 8.66 kN ←, V_A = 11.125 kN ↑, R_B = 13.875 kN ↑

P3. H_A = 0, V_A = 39.5 kN ↑, R_B = 89.5 kN ↑

P4. P = 26 kN ; R_B = 72 kN ↑

P5. H_A = 22.98 kN →, V_A = 38.3 kN↑, R_B = 25.98 kN ↑

P6. H_A = 0, V_A = 104 kN ↑, R_B = 136 kN ↑

P7. H_A = 10kN →, V_A = 52.32kN ↑ M_A = 99.64kNm ↺

P8. H_B = 0, V_B = 50 kN ↑; R_C = 60 kN ↑

P9. R_A = 4.83kN ↑, R_B = 5.167kN ↑

P10. R_A = 7.5 kN ↑, H_B = 2.12 kN →, V_B = 8.62 kN ↑

P11. H_B =104.52 kN →,V_B =152.14kN ↑, R_F = 67.63 kN θ = 60° ↖

P12. H_A = 17.32 kN →, V_A = 10 kN ↑, R_B = 45 kN ↑

P13. H_A = 157.04 kN →, V_A = 108 kN ↑, R_B = 314.08 kN θ = 60° ↖

P14 T_{AB} = 125.35 N, T_{AC} = 119.75 N

P15. R_A = 253.86 N θ = 40° ↗, R_B = 388.93 N θ = 60° ↖

P16. T = 732.05 N ; R_D = 896.57 N

P17. a) Water force = 0.1156 kN, T_{OC} = 0.808 kN,
b) Boat remains in equilibrium, T_{OB} = 0.1335 kN, T_{OA} = 0.0667 kN.

P18. T = 13.33 kN, H_A = 1.66 kN →, V_A = 12.74 kN ↑.

P19. T = 11.18 kN, H_A = 5 kN →, V_A = 2 kN ↑

P20. T = 2.6 kN, H_A = 1.3 kN →, V_A = 0.748 kN ↑.

P21. W = 360 N ; x = 1.66 m

P22. P = 4.68 kN, R_A = 3.748 kN, θ = 38.83° ↗

P23. x = 1.607 m

P24. P = 96N ↓, Q = 559 N ←, R = 665.34 N θ = 30° ↗

P25. F = 13, α = 67.38°, L(AD) = 8.66 m

P26. E = 66.13 N, θ = 18.46° ↘

P27. T = 98.48 N, R_A=177.4 N, θ = 58.56° ↗

Exercise 3.2

P1. H_A = 10 kN →, V_A = 13 kN ↓, R_B = 53 kN ↑, R_D = 30 kN ↑

P2. H_A = 20.2 kN →, V_A = 55 kN ↑, M_A = 90 kNm ↺ R_C = 40.41 kN, θ = 60° ↖

P3. H_A = 0, V_A = 42 N ↑ ; H_D = 0, V_D = 148 N ↑, M_D = 664 Nm ↺ ; R_B = 48 N ↓

P4. H_A = 6.43 kN ←, V_A = 32 kN ↑; M_A = 84.28 kNm ↺, R_B = 6.67 kN ↑; R_C = 3.3 kN

P5. P = 17.91 kN

P6. R_A = 23.02 kN ↓, R_B = 243.97kN ↑, H_D = 37.5 kN →, V_D = 54 kN ↑

P7. H_A = 19.82 kN →, V_A = 27.15 kN ↑, H_C = 19.82 kN ←, V_C = 47.85 kN ↑

P8. R_A = 133.3 N →, R_B = 200 N ↑, R_C = 133.3 N ←, R_D = 166.6 N

P9. $R_6 = 784.8$ N →

P10. $R_A = 200$ N ←, $R_B = 600$ N; $R_C = 200$ N, $H_D = 200$ N →; $V_D = 600$ N ↑

P11. $R_1 = R_2 = 1400$ N ↑, $R_3 = R_4 = 755.93$ N, T = 566.94 N

P12. $R_1 = 496.65$ N →, $R_2 = 1463.3$ N ↑, $R_3 = 869.14$ N, $R_4 = 573.5$ N θ = 30°

P13. $R_1 = 19.729$ N, θ = 65°, $R_2 = 11.604$ N, $R_3 = 32.216$ N, θ = 75°,

P14. $R_C = 992.3$ N ↑, $R_B = 692.3$ N, T = 271. 5 N

P15. $R_A = R_B = 4330$ N θ = 60°, $R_C = 5000$ N θ = 30°

P16. $R_1 = 500$ N, θ = 30°, $R_2 = R_3 = 433$ N, θ = 60°, $R_4 = 250$N

P17. T = 685.79N, $R_D = 1000$ N →, $R_E = 1414.2$ N

P18. $T_{AB} = 339.82$ N, $T_{AE} = 169.91$ N, $T_{BD} = 490.6$ N, T_{BC} = = 562.44 N, $T_{AF} = 294.3$ N

Chapter 4

Exercise 4.1

P1. (a) 40 N, (b) 37.52 N, (c) 60 N (d) 84.6 N

P2. $P_{least} = 174.8$ N, $P_{greatest} = 625.16$ N

P3. 780.4 N

P4. 780 N, 648.6 N, 80 N

P5. 40 N

P6. Block is in equilibrium, F = 20.18N acts down the plane

P7. can not be parked at all times

P8. 1463.1 N

P9. 331.43 N

P10. 3.09 N

P11. 360.7 kg

P12. 24.84 N, 99.2 N

P13. 25.5 N

P14. 9.2 kg

P15. 225 N

P16. a) 1250 N b) 1210.4 N

P17. 331.1 N

P18. 173.79 N

P19. θ = 29.18°

P20. 60.95°

P21. 168.9 N

P22. 26.35 kN, 17.57 kN (Compressive)

P23. 10.487 kN

P24. M = 2368.2 Nm

Exercise 4.2

P1. 12439 N

P2. 134.64 kN

P3. 1512 N

P4. 5959 N

P5. 81.04 N

P6. P = 3474 N

Exercise 4.3

P1. x = 2.663 m

P2. 8.28 N ≤ P ≤ 80.5 N

P3. a) 0.571 m b) 76.67°

P4. 0.5107

P5. θ = 28.07°

P6. μ = 0.2

P7. 53.34°

P8. 50 N; Ladder is in equilibrium

Exercise 4.4

P1. 375 N, 1.75 m

P2. 27 N

P3. 57.14 cm

P4. At P = 100N, the block slips

P5. 80 N

Chapter 5

Exercise 5.1

P1. $F_{AB} = 3333$ N (T); $F_{AC} = 2667$ N (C); $F_{BC} = 0$

P2. $F_{AC} = 5$ kN (T); $F_{AD} = F_{BD} = 8$ kN (T); $F_{BC} = 17.88$ kN (C), $F_{CD} = 20$ kN (T)

P3. $F_{FE} = 3$ kN (T); $F_{BF} = 44$ kN (C); $F_{BC} = F_{CD} = 27$ kN (C); $F_{AF} = 55$ kN (T); $F_{CE} = 60$ kN (C); $F_{AB} = 3$ kN (C); $F_{DE} = 45$ kN (T); $F_{BE} = 34$ kN (T)

P4. $F_{AC} = F_{BG} = 24.75$ kN (C); $F_{AD} = F_{BH} = 17.5$ kN (T); $F_{CE} = F_{GE} = 18.45$ kN (C); $F_{CD} = F_{GH} = 11.67$ kN (T); $F_{DE} = F_{HE} = 2.09$ kN (C); $F_{DF} = F_{HF} = 18.75$ kN (T); $F_{EF} = 15$ kN (T)

P5. $F_{BD} = 52.7$ kN (C), $F_{AB} = 16.7$ kN (T), $F_{AD} = 23.6$ kN(C), $F_{AC} = 33.34$ kN (C), $F_{CF} = 40$ kN (C), $F_{CD} = 22.23$ kN (T), $F_{DF} = 70.3$ kN (C), $F_{CE} = F_{EF} = 0$

P6. $H_A = 150$ N ←, $V_A = 25$ N ↑, $R_D = 475$ N ↑, $F_{AB} = 45.07$ N (C), $F_{AE} = 187.5$ N (T), $F_{BE} = 200$ N (T)

P7. $R_B = 7.5$ kN ↑; $F_{BD} = 15$ kN (C); $F_{BE} = 13$ kN (T); $F_{CD} = 10$ kN (C); $F_{DE} = F_{AC} = 8.68$ kN (C); $F_{EC} = 8.66$ kN (T); $F_{AE} = 4.34$ kN (T)

P8. $F_{BC} = 28.28$ kN (T), $F_{BD} = 20$ kN (C); $F_{CD} = 20$ kN (C), $F_{EC} = 20$ kN (T); $F_{ED} = 56.56$ kN (T); $F_{DF} = 60$ kN (C). $F_{AB} = F_{AC} = F_{EF} = 0$

P9. $F_{AE} = 1.748$ kN (T), $F_{AC} = F_{CD} = 0.864$ kN (C), $F_{DE} = 1$ kN (T), $F_{BD} = 1.5$ kN (C), $F_{BE} = 0.75$ kN (T), $F_{CE} = 1$ kN (C).

P10. $F_{GF} = 223.6$ N (C), $F_{CE} = F_{EG} = 200$ N (T), $F_{CF} = 223.6$ N(T), $F_{DF} = 447.3$ N (C), $F_{BD} = 745.3$ N(C), $F_{AB} = 333.2$ N (T), $F_{AD} = 377.3$ N (T), $F_{AC} = 400$ N (T), $F_{CD} = 400$ N (C), $F_{EF} = 200$ N (C).

P11. $F_{GE} = F_{BD} = 141.4$ kN (T), $F_{BF} = F_{EH} = 141.4$ kN (C), $F_{AD} = F_{DE} = F_{FH} = 100$ kN (C), $F_{AB} = 200$ kN (C), $F_{BC} = F_{CF} = F_{DG} = 0$, $F_{EF} = F_{GH} = 100$ (T)

P12. $H_A = 2$ kN ←, $V_A = 2.5$ kN ↑, $R_B = 1.5$ kN ↑, $F_{AF} = 4.5$ kN (T), $F_{CE} = 0.715$ kN (C), $F_{AD} = 3.54$ kN (C), $F_{CF} = 1$ kN (T), $F_{DF} = 2.83$ kN (C), $F_{BE} = 2.12$ kN (C), $F_{DC} = 0.712$ kN (C), $F_{BF} = 1.5$ kN (T), $F_{EF} = 1.414$ kN (T)

P13. $F_{AC} = 44.72$ kN(C), $F_{AE} = F_{ED} = 15$ kN(C), $F_{AB} = 32$ kN(T), $F_{CE} = F_{EB} = 25$ kN(C), $F_{BD} = 26.83$ kN(C)

P14. BC, CD, JI, IL, LM, MN are zero force members.

P15. $F_{BG} = F_{BF} = F_{FC} = F_{CE} = 0$; $F_{AB} = F_{BC} = F_{CD} = 17.32$ kN (C); $F_{AG} = F_{GF} = F_{EF} = 10$ kN (T)

Exercise 5.2

P1. $F_{AB} = F_{DF} = 6.364$ kN (T); $F_{AC} = 6.5$ kN (C); $F_{EF} = F_{BC} = F_{CE} = 4.5$ kN (C); $F_{CD} = 2.5$ kN (C) ; $F_{BD} = 6.5$ kN(T) ; $F_{ED} = 3$ kN (C)

P2. $F_{BD} = 1264.8$ N (C); $F_{CD} = 999.9$ N (T); $F_{CE} = 600$ N (T); $F_{AB} = 1697$ N (C); $F_{AC} = 1200$ N (T); $F_{BC} = 399.9$ N(C); $F_{DF} = 1341.7$N (C); $F_{DE} = 200$ N (T) $F_{EF} = 600.1$ N (T).

P3. $R_B = 64.16$ kN ↑; $V_A = 55.8$ kN ↑; $H_A = 20$ kN ←; $F_{CD} = 0$; $F_{JH} = 66.2$ kN (T); $F_{EJ} = F_{GB} = 0$; $F_{FB} = 80.2$ kN (C)

P4. $R_A = 50$ kN →, $H_B = 55$ kN ←, $V_B = 30$ kN ↑; $F_{CE} = 12.5$ kN (T), $F_{CF} = 25$ kN (T); $F_{GE} = 12.5$ kN (T), $F_{GF} = 7.5$ kN (C), $F_{EF} = 10$ kN (C), $F_{BC} = 50$ kN (T), $F_{AB} = 30$kN(T), $F_{AD} = F_{DF} = 22.5$ kN (C), $F_{AC} = 37.5$ kN (C).

P5. $R_B = 26.33$ N ↑; $H_A = 10$ kN ←; $V_A = 18.67$ kN ↑; $F_{EF} = 11.7$ kN (C); $F_{CE} = 43$ kN (C); $F_{BF} = 44.05$ kN (T); $F_{AD} = 49.6$ kN (C) ; $F_{AF} = 47.96$ kN (T), $F_{DC} = 28.86$ kN(C); $F_{DF} = 15.6$ kN (C) ; $F_{CF} = 50.81$ kN(T); $F_{BE} = 58.54$ kN (C)

P6. $F_{EG} = 5.33$ kN (T); $F_{GJ} = 10.66$ kN (T);

P7. $F_{DE} = 20$ kN (T), $F_{BC} = 34.64$ kN (C), $F_{AB} = 34.64$ kN (C), $F_{CE} = 40$ kN (T), $F_{BE} = F_{CD} = 40$ kN (C), $F_{AE} = 60$ kN (T)

P8. $R_F = 150$ kN ↑; $V_E = 100$ kN ↓ ; $H_E = 0$; $F_{AE} = 128$ kN (T); $F_{CD} = F_{CH} = F_{GH} = F_{HD} = 0$

P9. $R_C = 85$ kN ↑, $V_D = 15$ kN ↓, $H_D = 0$, $F_{BF} = F_{CF} = 0$; $F_{EF} = F_{AF} = 50$ kN (T); $F_{ED} = 30$ kN (T); $F_{EC} = 20$ kN (C), $F_{AB} = F_{BC} = 86.6$ kN (C), $F_{CD} = 26$ kN (C)

P10. $F_{BF} = 40$ kN(T), $F_{BE} = 29.82$ kN(C), $F_{EF} = F_{AF} = 36.67$ kN(T), $F_{ED} = 15.55$ kN(T), $F_{CE} = 21.11$ kN(T), $F_{AB} = 23.57$ kN(C), $F_{BC} = 4.97$ kN(T), $F_{CD} = 28.04$ kN(C)

P11. $H_A = 45$ kN ←; $V_A = 60$ kN ↓; $H_B = 45$ kN →; $V_B = 100$ kN (T)↑; $F_{KC} = 50$ kN (T); $F_{BH} = 100$ kN (C); $F_{MH} = F_{KD} = F_{CD} = 0$

P12. $H_A = 0$; $V_A = 120$ kN ↓; $R_B = 160$ kN ↑; $F_{EC} = 169.7$ kN (T); $F_{ED} = 160$ kN (C); $F_{DF} = 120$ kN (C); $F_{AB} = F_{BC} = F_{GF} = F_{HI} = 0$

P13. $F_{DG} = 0$, $F_{FH} = 100$ kN (C)

P14. a) $H_A = 29.61$ kN ←, $V_A = 40$ kN ↑, $R_C = 29.61$ kN →;
b) $F_{AH} = 35.55$ kN (T); $F_{AD} = 7.4$ kN (C)

P15. $F_{BC} = 5.83$ kN(C), $F_{CG} = 4.186$ kN(T), $F_{CD} = 4.416$ kN(C)

P16. $H_A = 0$; $V_A = R_B = 15$ kN ↑, $F_{CD} = 10$ kN (T) ; $F_{FH} = 15.37$ kN (C) ; $F_{FD} = 2.25$ kN (C)

P17. $T = 1.368$ kN, $H_A = 2.39$ kN ←, $V_A = 1.368$ kN ↑, $F_{AD} = 2.736$ kN (C)

P18. $F_{AB} = F_{BD} = 27$ kN (T); $F_{CD} = 4.17$ kN (C); $F_{CE} = 29.58$ kN (C); $F_{AC} = 33.75$ kN (C); $F_{BC} = 5$ kN (T); $F_{GD} = 23.9$ kN (T), $F_{FG} = 17.32$ kN (C), $F_{FD} = 23.66$ kN (T); $F_{EF} = 12.247$ kN (C), $F_{DE} = 26.4$ kN (T)

P19. $F_{AB} = 3.33$ kN (T) , $F_{AF} = 10$ kN (T)

P20. $F_{CE} = 5.59$ kN (T); $F_{CD} = 4$ kN (C); $F_{DB} = 4.5$ kN (C); $F_{DE} = 2.5$ kN (C)

P21. $F_{DF} = 0$, $F_{EF} = 200$ kN (T), $F_{ED} = 26.79$ kN (T), $F_{FC} = 100$ kN (C), $F_{GF} = 300$ kN (T), $F_{BC} = 59.8$ kN (C), $F_{GC} = 50$ kN (T)

P22. $F_{ED} = 10$ kN (C)

Chapter 6

Exercise 6.1

P1. $G_1 = (-4, 2.5)$; $G_2 = (-1.5, -2)$; $G_3 = (5, 3.5)$; $G_4 = (13.5, -3)$; $G_5 = (8, 10)$; $G_6 = (7, -1.5)$; $G_7 = (6, -1.5)$; $G_8 = (0, -12)$; $G_9 = (4, 1.698)$; $G_{10} = (2, -2.122)$; $G_{11} = (4.029, 4.029)$; $G_{12} = (0, 1.273)$; $G_{13} = (6.366, -1.706)$ All units in cm.

P2. $\bar{X} = 7.417$ cm, $\bar{Y} = 6$ cm

P3. $\bar{X} = 4.371$ m, $\bar{Y} = 1.822$ m

P4. $\bar{X} = 5.63$ cm, $\bar{Y} = 0.565$ cm

P5. $\bar{X} = 7.556$ cm, $\bar{Y} = 5.569$ cm

P6. $\bar{X} = 3.582$ cm, $\bar{Y} = 3.917$ cm

P7. $\bar{X} = 9.858$ cm, $\bar{Y} = 7.119$ cm

P8. $\bar{Y} = 23.09$ cm from base on A.O.S

P9. $\bar{X} = 6.976$ cm, $\bar{Y} = 12.73$ cm

P10. $\bar{X} = 71.09$ mm, $\bar{Y} = 32.2$ mm

P11. $\bar{X} = 1.845$ cm, $\bar{Y} = 3.513$ cm

P12. $\bar{X} = \bar{Y} = 5.358$ cm

P13. $\bar{X} = 112.54$ mm, $\bar{Y} = 19.65$ mm

P14. $\bar{X} = 2.58$ cm, $\bar{Y} = -0.47$ cm

P15. $\bar{X} = 12.46$ mm, $\bar{Y} = 22.04$ mm

P16. $\bar{X} = 2.941$ cm, $\bar{Y} = -0.904$ cm

P17. $\bar{X} = 6.797$ cm, $\bar{Y} = 5.043$ cm

Exercise 6.2

P1. $\bar{X} = 5.347$ cm, $\bar{Y} = 2.568$ cm

P2. $\bar{X} = -0.407\,r$, $\bar{Y} = 0.488\,r$

P3. $\bar{X} = 1.675$ cm, $\bar{Y} = 2.121$ cm

P4. $\bar{X} = 10$ cm , $\bar{Y} = 3$ cm

P5. $\bar{X} = 17.89$ cm, $\bar{Y} = 11.16$ cm

P6. $\bar{X} = -0.364$ cm, $\bar{Y} = 0.386$ cm

P7. $\bar{X} = 0$, $\bar{Y} = -0.018\,r$

P8. $\bar{X} = 2.931$ m, $\bar{Y} = 2.294$ m

Exercise 6.3

P2. $\bar{X} = \frac{5a}{12}$, $\bar{Y} = \frac{4b}{9}$

P3. $\bar{X} = 3.03$ cm, $\bar{Y} = 7.31$ cm

P4. $\bar{X} = \frac{3}{4}a$, $\bar{Y} = \frac{3}{10}b$

P5. $\bar{X} = 2$, $\bar{Y} = 1.6$

P6. $\frac{\pi bL}{4}$, $\frac{4L}{3\pi}$

Chapter 7

Exercise 7.1

P1. $-50\,\mathbf{j}$ N

P2. a) $-120\,\mathbf{i} + 30\,\mathbf{j} + 40\,\mathbf{k}$ kN b) $200\,\mathbf{i} + 200\,\mathbf{j} + 450\,\mathbf{k}$ Nm

P3. $\bar{M}_O^F = -12\,\mathbf{i} - 3\,\mathbf{j} + 2\,\mathbf{k}$ Nm, $\bar{M}_B^F = -32\,\mathbf{i} + 15\,\mathbf{j} + 13\,\mathbf{k}$ Nm

P4. $-160\,\mathbf{i} + 40\,\mathbf{j} - 180\,\mathbf{k}$ Units

P5. $-700\,\mathbf{i} + 3200\,\mathbf{j} - 2700\,\mathbf{k}$ Nm

P6. $1690.4\,\mathbf{i} + 634\,\mathbf{j} + 1796.2\,\mathbf{k}$ Nm

P7. $-24.91\,\mathbf{i} + 481.6\,\mathbf{j} - 298.9\,\mathbf{k}$ Nm

P8. i) $\overline{M}_O^F = 12\,\mathbf{i} + 24\,\mathbf{j}$ Nm ii) $\overline{M}_B^F = 18\,\mathbf{i} + 18\,\mathbf{j} - 36\,\mathbf{k}$ Nm iii) $\overline{F}' = 2\,\mathbf{i} + 2\,\mathbf{j} + 2\,\mathbf{k}$ N

P9. $\theta_x = 45.9°$, $\theta_y = 50°$, $\theta_z = 108.7°$

P10. $\theta_x = 118.97°$, $F = 1548.6$ N, $F_y = 654.5$ N, $F_z = 1186.3$ N

P11. $-7.68\,\mathbf{i} + 28.8\,\mathbf{j} + 28.8\,\mathbf{k}$ Nm

P12. $\overline{M}_O^{F_1} = 120\,\mathbf{i}$ kNm, $\overline{M}_O^{F_2} = 420\,\mathbf{i} - 700\,\mathbf{k}$ kNm, $\overline{M}_O^{F_3} = 360\,\mathbf{j} - 240\,\mathbf{k}$ kNm

Exercise 7.2

P1. $\overline{R} = 3.57\,\mathbf{i} + 6.36\,\mathbf{j} + 2.83\,\mathbf{k}$ N, $\overline{M}_D^R = -1.44\,\mathbf{i} - 12.66\,\mathbf{j} + 30.36\,\mathbf{k}$ Nm

P2. a) $\overline{R} = 2.396\,\mathbf{i} + 2.526\,\mathbf{j} + 4.203\,\mathbf{k}$ kN b) $\overline{M}_D = -15.96\mathbf{i} - 25.81\mathbf{j} + 24.61\mathbf{k}$ kNm

P3. $T_{AB} = 37.15$ kN, $T_{AD} = 61.22$ kN $\overline{R} = -110.21\,\mathbf{j}$ kN

P4. $R = 53.66$ N, $\theta_x = 78.62°$, $\theta_y = 84.36°$, $\theta_z = 12.73°$

P5. $\overline{R} = -1200\,\mathbf{k}$ kN, acts at (3.5, 1.33, 0) m

P6. $\overline{R} = -140\,\mathbf{j}$ kN acts at (3.428, 0, 2)m

P7. $\overline{R} = 1.269\mathbf{i} + 10.364\mathbf{j} + 13.16\mathbf{k}$ kN $\overline{M}_O = 8.432\,\mathbf{i} + 29.46\,\mathbf{k}$ kNm

P8. $\overline{R} = 109.6\,\mathbf{i} + 484.2\,\mathbf{j} + 447.7\,\mathbf{k}$ N $\overline{M} = 1103\,\mathbf{i} + 2121\,\mathbf{k}$ Nm

P9. $\overline{R} = 100\,\mathbf{i} + 141.42\,\mathbf{j} + 158.57\,\mathbf{k}$ N $\overline{M} = -600\,\mathbf{i} + 200\,\mathbf{k}$ Nm

P10. $\overline{R} = -75.43\,\mathbf{i} - 14.28\,\mathbf{j} + 80\,\mathbf{k}$ kN, $\overline{M}_O = -240\,\mathbf{j} - 42.84\,\mathbf{k}$ kNm

P11. $\overline{R} = -18.48\,\mathbf{i} + 3.32\,\mathbf{j} + 8\,\mathbf{k}$ N, $\overline{M}_O = -80\,\mathbf{i} - 24\,\mathbf{j} - 50.04\,\mathbf{k}$ Nm

Exercise 7.3

P1. $F_{BC} = 833$ N, $F_{BD} = 167$ N, $\overline{R}_A = 663\,\mathbf{i} + 336\,\mathbf{j} - 222.2\,\mathbf{k}$ N

P2. $F_{AB} = 360.89$ N (C), $F_{AC} = 447.28$ N (C), $F_{AD} = 490$ N (C)

P3. $F_{AB} = 327$ N (C), $F_{AC} = 406$ N (C), $F_{AD} = 445.5$ N (C)

P4. $F_{AC} = F_{BC} = 171.75$ kN (C), $F_{CD} = 333.4$ kN (C)

P5. $T_{AD} = T_{BD} = 5411$ N, $T_{CD} = 9874$ N

P6. 2102.6 N

P7. $T_{BC} = 0.2356$ kN, $T_{BD} = 1.424$ kN, $\overline{R}_A = 1.165\,\mathbf{k}$ kN

P8. $T_{CA} = 336.47$ N, $T_{CB} = 336.47$ N, $P = 374.83$ N

P9. $T_{DC} = 187.7$ kN, $T_{DB} = 43.89$ kN, $F_{DO} = 295.75$ kN (C).

P10. $T_A = 302.45$ N, $T_B = 402.6$ N, $T_C = 100.55$ N

P11. $T_A = 26.67$ N, $T_B = 40$ N, $T_D = 33.33$ N

Chapter 8

Exercise 8.1

P1. 0.5 W tan θ

P2. 1298.1 N

P3. 129.9 Nm

P4. 14.93°

P5. 5.04 kN

P6. 14.07 kN

P7. T = Q cot θ

P8. 13.66 kN

P9. $\dfrac{W_A}{W_B} = \dfrac{\sin\beta}{\sin\alpha}$

Exercise 8.2

P1. $H_A = 25$ kN ←, $V_A = 9.16$ kN ↑, $R_B = 34.14$ kN ↑

P2. $R_C = 26.67$ kN ↑, $V_A = 23.33$ kN ↑, $H_A = 0$

P3. T = 42.5 N

P4. T = 4698.5 N

P5. $R_B = 40$ kN ↑

P6. $H_A = 0$; $V_A = 2.66$ kN ↑; $R_C = 4.66$ kN ↑, $R_B = 16.66$ kN ↑

P7. $H_B = 0$; $V_B = 5.5$ kN ↑; $R_A = 1.5$ kN ↑; $M_B = 14$ kNm ↻

P8. $H_A = 0$, $V_A = 10$ kN ↑, $R_C = 58.33$ kN ↑, $R_D = 16.67$ kN ↑

P9. $H_A = 0$, $V_A = 25$ kN ↓, $M_A = 75$ kNm ↻

P10. $H_A = 0$; $V_A = 33$ kN ↑; $M_A = 126$ kNm ↻ ; $R_B = 21$ kN ↑

P11. $R_D = 15$ kN ↑, $R_B = 58.75$ kN ↑, $H_A = 0$, $V_A = 13.75$ kN ↓

P12. $R_A = 1.778$ kN ↑, $R_B = 15.5$ kN ↑, $H_C = 0$, $V_C = 2.722$ kN ↑, $M_C = 1.1$ kNm ↻

Chapter 9

Exercise 9.1-A

P1. 18412.5 m, 627.5 sec, 29.34 m/s

P2. 0.694 m/s², 16.67 m/s

P3. 16.33 sec, 40 m ↑, 20 m ↓

P4. 10.415 sec

P5. $s_A = 156.3$ m, $s_B = 206.3$ m, t = 13.423 sec

P6. 22.5 m/s

P7. 2.236 sec

P8. 4.78 m/s², 11.98 m/s

P9. 397.75 sec

P10. 20 m/s, 30 sec

Exercise 9.1-B

P1. 31.47 m, 24.82 m/s, 4.06 sec

P2. 19.13 m, 2.895 sec, 19.35 m/s

P3. 133.86 m

P4. 1.977 sec

P5. 4.416 sec, 32.65 m

P6. 57.6m, $v_1 = 33.62$ m/s, $v_2 = 19.61$m/s

P7. 644.2 mm

P8. 3.347 m

P9. 1.111 m, 0.666 m, 0.222 m

P10. 8.5 sec

P11. 29.525 m/s

P12. 24.22 m/s, 29.9 m

Exercise 9.2

P1. a) 10 m, 4 m/s, – 2 m/s² b) 3.66 m/s, 2.33 sec

P2. (i) 26 m/s, 18 m/s² (ii) $v_{min} = -1$ m/s, $\Delta x = 5$m (iii) 0.423 sec and 1.577 sec

P3. t = 1 sec, 5 sec; x = 25 m, -7 m; a = – 12 m/s², +12 m/s²

P4. 90 m, 56 m/s²

P5. $v = 0.0365t^3 + 10$ m/s, $x = 9.132\times10^{-3}t^4 + 10t + 24$ m, $v_{t=2} = 10.29$ m/s, $x_{t=2} = 44.15$ m/s

P6. a) 2.4 b) 1.342 m/s

P7. a) 4.5 b) 9.487 m/s c) 12.72 m/s

P8. 0.2197 sec, 0.5108 m

P9. 0.0245 sec, 0.05068 m

P10. 74.33 m, 24.8 m/s.

P11. a) 1 sec b) 21 m/s², 15.5 m, 19.5 m, 21.82 m

P12. 22.63 m/s; 89.44 m

P13. 140 m, 67 m/s; 155 m

P14. 9.165 mm/s; 0, ± 5 mm; 2.886 mm; 9.81 mm/s

P15. 20 cm/s; ± 6.708 cm; 3.873 cm

P16. 46.67 m, 47 m/s, 2 m/s²

P17. a) 17.1 m b) 20.38 m

P18. – 4.33 m/s, 84.01 m

P19. 8.174 m/s, 270 m

P20. a = – 0.147 m/s²

P21. a) 9.95 m/s b) ± 4.472 m c) 2.582 m

P22. k = 48 , 21.6 m

P23. k = 4.1, v = 2.427 m/s

Exercise 9.3

P1. 211.15 m/s, 144.5 m/s²

P2. v = 13.45 m/s , a = 26.83 m/s²

P3. a = 97.26 m/s², v = 68.12 m/s , r = 36.45 m, Δr = 38.57 m

P4. $x = y^2 - y - 127$

P5. $v_x = -1$ m/s, $v_y = 2t$ m/s, $a_x = 0$, $a_y = 2$ m/s²; $y = (1 - x)^2$

P6. 20 m/s, 28.28 m/s²

P7. 53.33 cm/s ; 63.59 cm/s²

P8. 4 m ; 37.83 m/s²

P9. 4.9 m/s

P10. 2.205m/s², 1.301m/s², 2.4 m/s²

P11. 0.655 m/s², 48 sec

P12. ρ = 315.42 m, a_n = 1.94 m/s², a_t = 7.76 m/s²

P13. $\bar{a} = 6i + 12j$ m/s²; $a_n = 2.4$ m/s²; $a_t = 13.2$ m/s²; ρ = 10.417 m

P14. v_x = 2.308 m/s, v_y = 5.538 m/s, 1.638 m/s²

P15. v_x = 3.578 m/s, v_y = 7.155 m/s, a = 3.816 m/s²

P16. 10.125 m

P17. (a) 0.967 m/s² (b) v_x = 0.91 m/s, v_y = 4.916 m/s (c) 6.25 sec.

P18. 2.5 m/s², 90 m

P19. 62.48 m/s, 508.14 m, $\bar{r}$ = 80 i +64 j m

P20. 64.03 m/s; 1312.6 m; $a_n = 3.123$ m/s²; $a_t = 10.307$ m/s²; 260.34 m

P21. 1273 m; 1.184 m/s², 5.248 m/s²

P22. 41.67 m

P23. a) ρ = 6.289 m, a_n = 7.155 m/s², a_t = 3.578 m/s²

b) ρ = 6.94 m, a_n = 3.655 m/s², a_t = 4.8 m/s²

P24. v_x = 6.402 m/s, v_y = 7.682 m/s, a_n = 15.74 m/s²

Exercise 9.4

P1. 599.06 m, 18.86 sec, 1212.3 m, 126.03 m/s θ = 59.33° ↘

P2. 20.98 m/s

P3. 51.63 m/s θ = 43.42° ↗ 94.196 m

P4. 7.18 m/s, 10.96 m/s, 55.45°

P5. 30.6 m

P6. 30.01m, 3.14 sec

P7. u = 26.41 m/s, α = 40.78°; Range = 70.329 m

P8. 55.37 m/s

P9. 6891 m

P10. 12.32 m

P11. 201 m ; 970.6 m; 110.26 m/s θ = 34.72° ↘

P12. 6.127 m/s ≤ v_o ≤ 8.756m/s

P13. 7.25 m/s,12.27 m/s α = 57.6° ↘

P14. θ = 82.35° or θ = 34.18° 10.759 m ≤ R ≤ 37.9 m

P15. 1736.31 m

P16. 3176.8 m; 256.2 m/s α = 54.17° ↘ ; 21.178 sec

P17. 7.045 sec; 404.1 m, 333.59 m

P18. 706.3 m, 815.6 m, 67.96 m/s

P19. 5.75 m/s

P20. 6.26 m/s

P21. 20.1 m/s, θ = 41.3°

P22. 2.482 sec, 19.49 m/s, 19.01 m

P23. 63.71 m; 44%

P24. 23.4 m/s, 2.019 sec

P25. 24.1 m/s, 59.55°

P26. 24.22 m/s, 52.86°

P27. 0.639 m/s ≤ v_0 ≤ 1.023 m/s

P28. 12.186 sec, 108.76 m/s ↘ 60°, (662.67, –419.35) m

P29. 32°, 14.77 m/s

P30. 47.41°, 69.91°

Exercise 9.5

P1. 0.3 m/s², 0, – 0.6 m/s², – 0.6 m/s²

P2. 60 m, 180 m, 210 m, 180 m

P3.

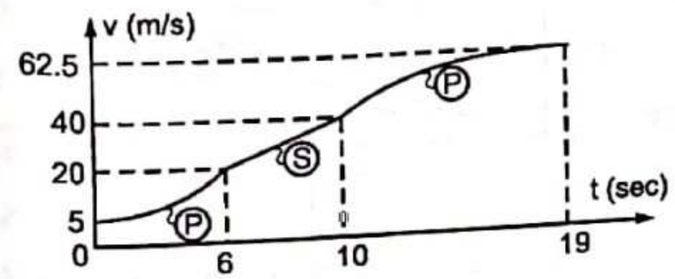

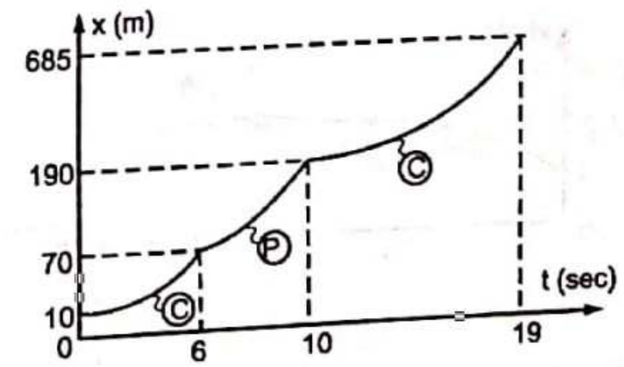

P4. 40 m/s, 56 m

P5. S = 960 m

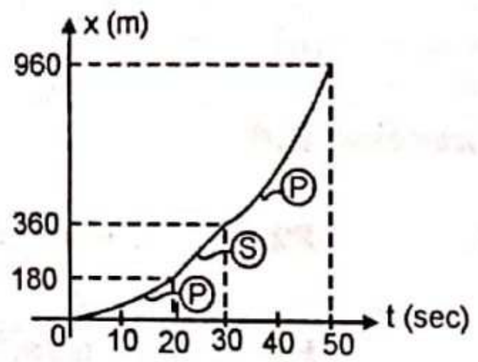

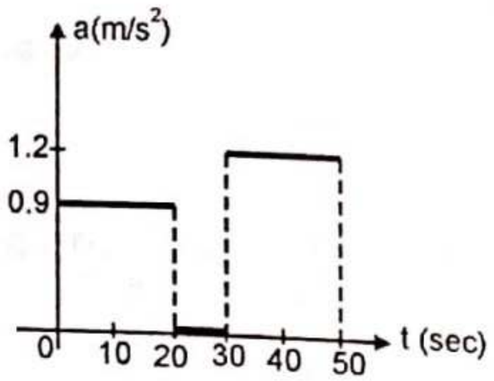

P6. $\Delta x_{6-10} = 0,\ s_{0-10} = 48$ m

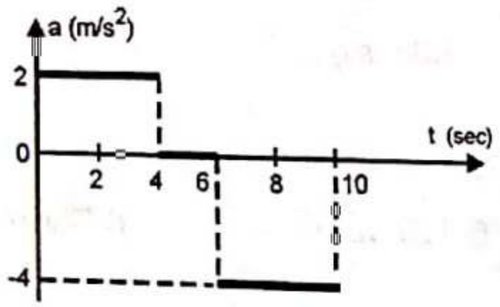

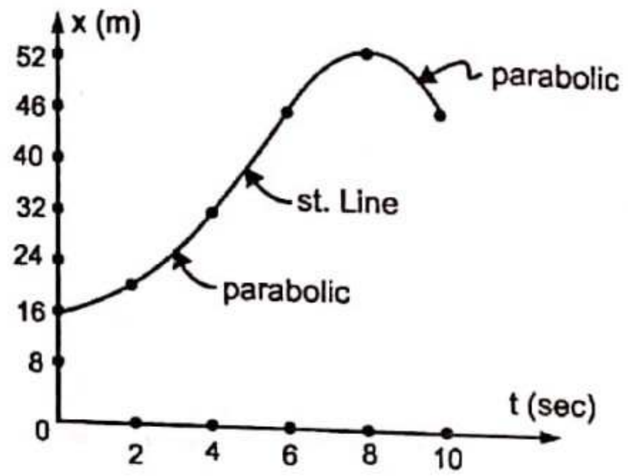

P7. $v_{max} = 315$ m/s

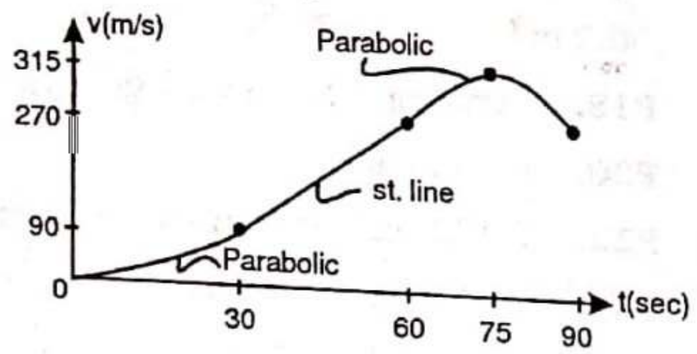

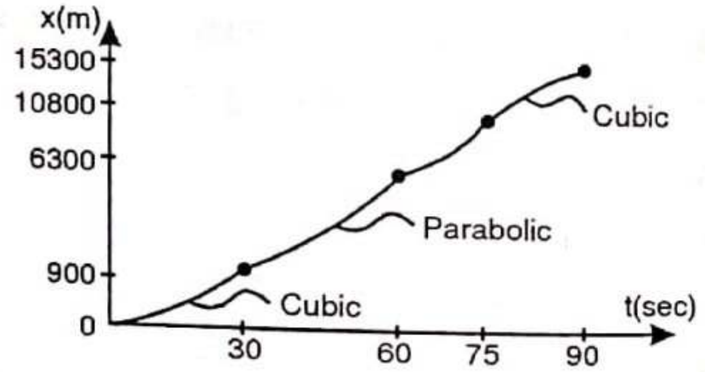

P8.

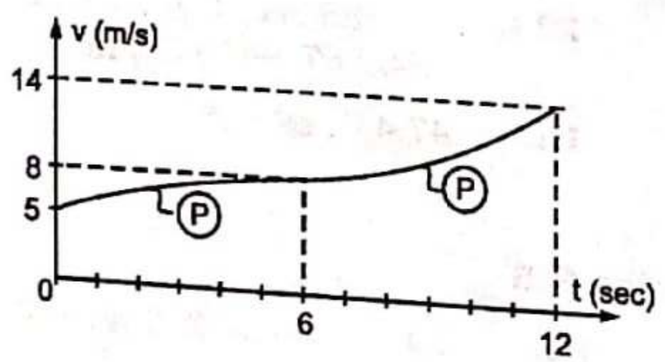

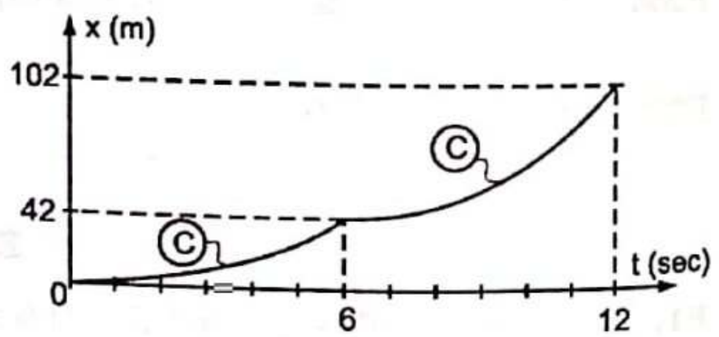

P9.

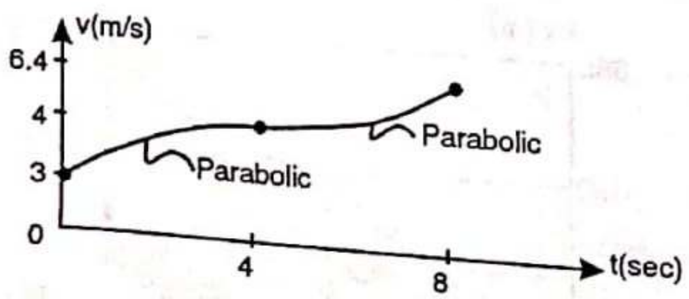

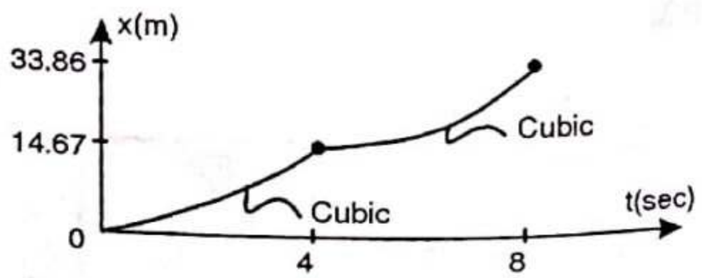

P10.

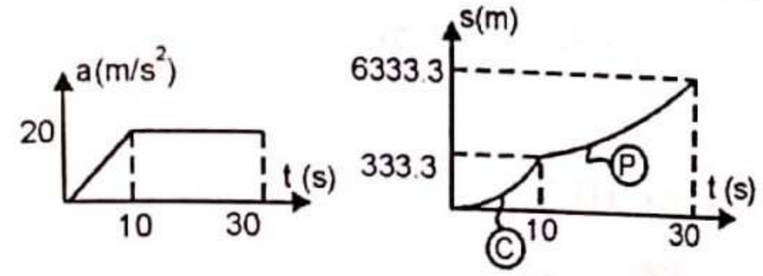

P11.

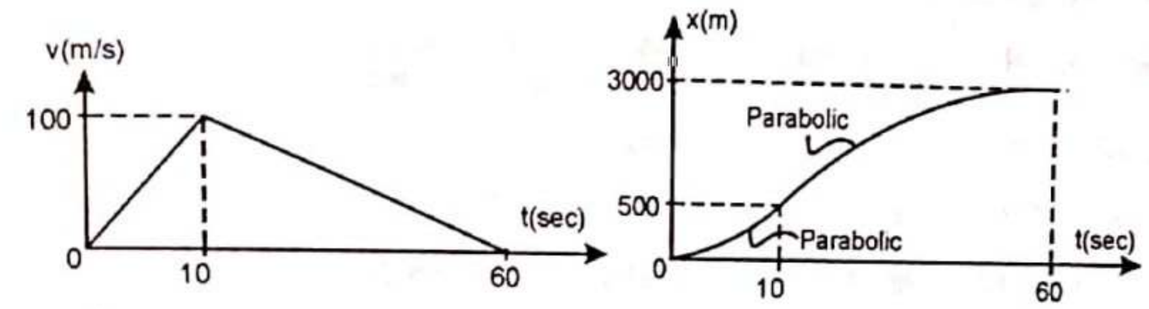

P12.

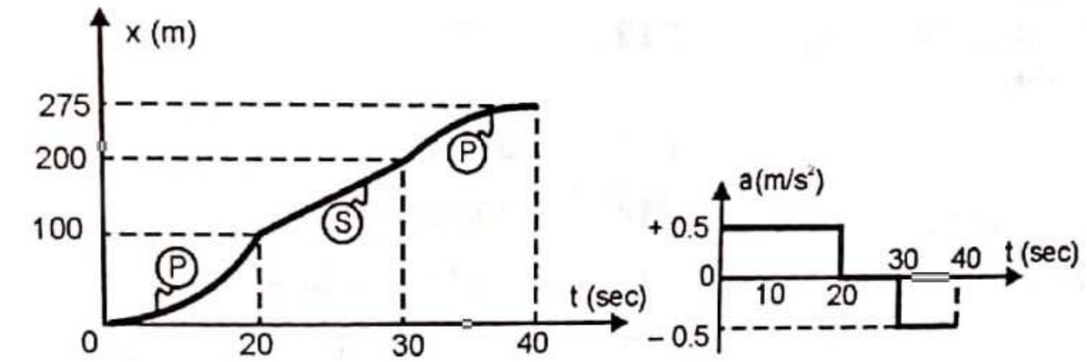

P13.

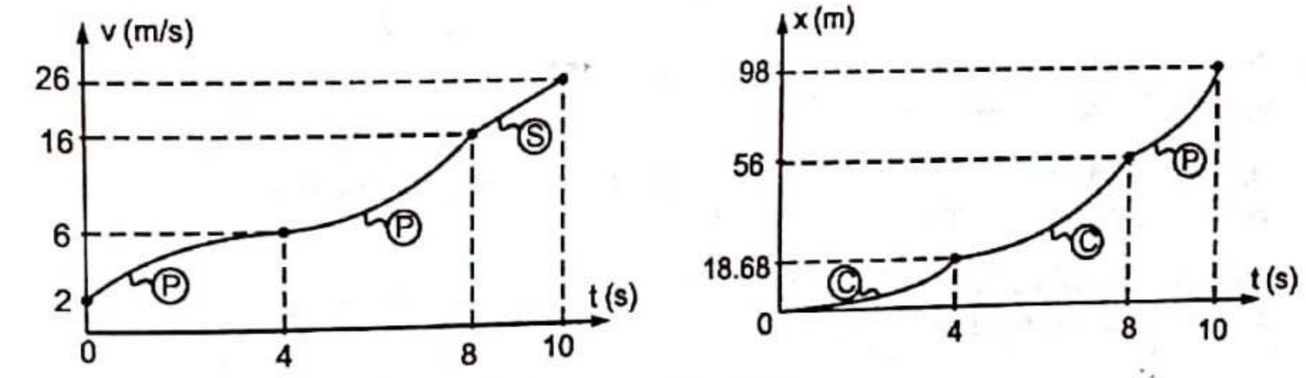

Exercise 9.6

P1. $v_{B/A} = 25.18$ kmph $\theta = 30.36°$ ↘

P2. (a) $v_{2/1} = 59.45$ kmph, $\theta = 81.51°$
(b) s = 29.725 km
(c) t = 50.46 minutes.

P3. a) $v_{A/B} = 55.86$ m/s, $\theta = 76.25°$ ↗
b) 111.72 km

P4. $v_{A/C} = 30.79$ kmph, 76.94° ↙

P5. a) 19.43 m/s, $\theta = 31°$ ↖
b) 40.25 kmph, $\theta = 26.56°$ ↖

P6. $v_A = 21$ m/s, $v_B = 7$ m/s

P7. $r_{B/A} = 98.14$ m ↗ 68°; $v_{B/A} = 8.139$ m/s, 47.49° ↙; $a_{B/A} = 2.5$ m/s² ↖ 53.13°

P8. 6.196 m/s, $\theta = 23.79°$ ↖

P9. 29.32 kmph, $\theta = 66.2°$ ↖

Exercise 9.7

P1. 2.5 m/s² ↑

P2. $v_B = v_A/2$, $a_B = a_A/2$

P3. 4.5 m/s² →, 36 m/s →

P4. 3.5 m/s ↓

P5. 6 m/s² ↓ **P6.** 1.6 m/s² ↑

Chapter 10

Exercise 10.1

P1. 5.39 m/s², 10.69 m/s²
P2. 208.63 N.
P3. 4.744 sec., 16.64 m, 31.64 m
P4. 5.157 sec, x_A = 63.88 m, x_B = 53.88m
P5. 2.498 m/s², 23.094 N.
P6. 14.886 N
P7. 8.318 m/s² , 29.69 m/s
P8. 110 m/s ; 21 sec
P9. 5663 m, 454.16 sec, 3000 kW
P10. 8201.25 N
P11. a) 5739.4 N, 748.62 N, heavy; b) 468.6 N, light.
P12. 2.565 m/s², 13.846 N
P13. 4.046 N
P14. 6.54 m/s², 5.232 m/s²
P15. $a_A = a_B = 3.212$ m/s²
P16. 1.962 m/s², 1177.2 N
P17. 642.86 N; 7 m/s
P18. a) 511.35 N b) 415.15 N
P19. 8.138 m/s
P20. a_A = 5.77 m/s², a_B = 2.885 m/s², T = 121.2 N
P21. a_A = 2.03 m/s² →, a_B = 2.71 m/s² →, T = 30.5 N
P22. $a_A = a_B = a_C = 4.765$ m/s², $T_{AC} = 33.63$N, $T_{BC} = 67.27$N
P23. a_A = 8.408 m/s², a_B = 4.204 m/s², T = 840.9 N
P24. $a_A = a_B$ = 8.08 m/s², T = 8.638 N
P25. a_A = 7.79 m/s², a_B = 4.58 m/s², a_C = 6.172 m/s², T = 54.57 N
P26. a_A = 4.025 m/s² ↑, a_B = 2.893 m/s² ↓ a_C = 0.566 m/s² ↓, T_1 = 27.67 N, T_2 = 55.35 N

Exercise 10.2

P1. 2.91 m/s, 56.63 N **P2.** 17.579 m/s **P3.** 2.79 rad/s
P4. 4.575 m/s², 7.183 m/s²
P5. 5390.4 N
P6. 7 m/s
P7. 10.28 N, 9.935 m/s²

Chapter 11

Exercise 11.1

P1. 4141.3N
P2. 11.18 m/s
P3. 8 sec, 0.3185
P4. 5.127 m/s; 8.195 m
P5. 3.657 m/s
P6. 24.85 m/s
P7. 334.64 N
P8. 1265 N, 0.027 sec
P9. v_A = 4.175 m/s, v_B = 2.087 m/s
P10. 3.098 m/s

P11. 4.862 m/s, 4.22 m/s, 0.9673 m
P12. 0.3 m
P13. a) 4.6 m/s b) 145 mm
P14. 11.719 m/s, 0.727 m
P15. 6.968 m/s
P16. x = 0.667 m
P17. 2.828 m, 7.67 m/s
P18. 62.12 kN/m
P19. 3.812 m/s
P20. v_B = 2.987 m/s, v_C = 2.828 m/s
P21. v_A = 2.287 m/s, v_B = 4.575 m/s
P22. 0.1737 m
P23. a) 0.7214 m b) v_{max} = 5.06 m/s
P24. 0.1769 m
P25. 0.0649 m
P26. 1.98 m/s
P27. 110.66 N/m, 25.762m, 21.18 m/s
P28. 159.83 m
P29. 0.9392 m

Chapter 12

Exercise 12.1

P1. 25.48 sec **P2.** 16.72 m/s **P3.** 1.1658 sec
P4. 0.2548 **P5.** 500 N, 1m **P6.** 10417 N
P7. 7.1 N sec, 23.65 N **P8.** 408.63 N **P9.** 414.5 N
P10. 0.045 m/s → **P11.** 16.34 N.sec, 16.029 m/s, 40.07 m
P12. a) 1.8 m/s ← b) 1.125 m/s ←

Exercise 12.2

P1. v_A' = 1.33 m/s ←, v_B' = 1.67 m/s →, 53.27 J
P2. 0.833 **P3.** 0.8 **P4.** 0.333 m/s ← , 98.99 %
P5. v'_A = 1.0125 m/s →, v'_B = 0.3375 m/s → , v'_C = 0.15 m/s →
P6. a) v_A' = 0.3 m/s →, v_B' = 1.7 m/s →, b) v_A' = 0.261 m/s →, v_B' = 0.293 m/s →, v_C' = 1.445 m/s →
P7. $v_A = 7v_B$ **P8.** 0.866 **P9.** 0.8165, 13.5 m
P10 v_B' = 4. 545 m/s ↑
P11. v_1' = 0.254 m/s ↑; V_2' = 3.973 m/s, θ = 63.6° ↘
P12. 9.36 m/s, α' = 64.98° ↘ ; 18.05 m/s, β '= 69.6° ↗
P13. v_A' = 2.92 m/s, α' = 20° ↘ v_B' = 3.468 m/s, β' = 86° ↗
P14. a) 15.716 m/s, 50.48° ↗ b) 24.709 m
P15. 13.32 m/s, 46.4° ↘
P16. v_A' = 1.7316 m/s ← v_B' = 2.92 m/s, β'=51.92°↗, 11.2%
P17. v_A' = 35.05m/s, α' = 8.82° ↘ v_B' = 23.03 m/s , β' = 64.26° ↘
P18. 0.35

SMT. INDIRA GANDHI COLLEGE OF ENGINEERING LIBRARY Navi Mumbai

Exercise 12.3

P1. 10.77 m/s

P2. 3.967 m

P3. $v_A' = 12.26$ m/s ↓, $v_B' = 7.74$ m/s ↑

P4. 115.63 kN/m

P5. 59.34°

P6. 27.64 m.

P7. a) 2.507 m/s b) $\theta = 49.9°$

P8. 2.032 m, 29.659 N

P9. 9.69°, 29.37°

P10. 3.23 m/s

P11. 17 blows

P12. 5.1 mm; 20 blows

P13. 73.28°

P14. 2.5 r

P15. 19.506 m/s, $\theta = 15.57°$ ↗

P16. 4.74 sec, $x_A = 31.62$ m, $x_B = 21.62$ m, $v_A' = 10.39$ m/s, $v_B' = 13.55$ m/s.

Chapter 13

Exercise 13.1

P1. 5.846 rad/s², 10.26 s

P2. N = 6.41 rev, t = 3.5 sec

P3. 45 rpm, 30 sec.

P4. 1.8 m

P5. 46.42 revolutions, 16.67 sec, 2.5 m/s, 12.52 m/s².

P6. i) 72.5 rev ii) 1305 rev

P7. 272.15

P8. 46.61 rad/s, 23.01 revolutions, 116.53 m/s

P9. a) 8000
b) 1.745 rad/s², 0.5817 rad/s²
c) 20.94 m/s, 731 m/s².

P10. 38.75 rad/s, 11.5 rad/s².

P11. 2.736 rad/s, 6.275 rad/s²; 3.626 rad/s, $\theta = 76.9°$

P12. 0.7 m/s², 17.06 m/s²; $N_A = 5.73$, $N_B = 1.91$

P13. 0.1047 rad/s, 1.745×10^{-3} rad/s, 1.45×10^{-4} rad/s; 7.27×10^{-5} rad/s

Exercise 13.2

P1. 25.93 rad/s ↺ ; $v_B = 5.964$ m/s →, $v_C = 9.28$ m/s, $\theta = 15.61°$ ↗

P2. $v_B = 10$ m/s ↓, $\omega_{AB} = 1$ rad/s

P3. $\omega_{AB} = 43.38$ rad/s ↻, $v_B = 18.43$ m/s ←

P4. 0.719 m/s

P5. $\omega_{BD} = 5.3$ rad/s ↺, $\omega_{AB} = 5.3$ rad/s ↻, $v_B = 2.12$ m/s $\theta = 45°$ ↘

P6. $\omega_{BC} = 0.35$ rad/s ↻, $v_C = 0.063$ m/s →

P7. $\omega_{BC} = 18$ rad/s ↺, $\omega_{CD} = 30$ rad/s ↺

P8. 2.335 rad/s ↺, $v_C = 0.715$ m/s ↑, $v_D = 1.219$ m/s, $\theta = 72.14°$ ↖

P9. 2.936 rad/s ↺, $v_B = 5.531$ m/s, $v_M = 4.555$ m/s

P10. $v_B = 1.155$ m/s ↓

P11. $v_P = 14.14$ m/s, $\theta = 45°$ ↘, $v_Q = 20$ m/s →

P12. 1.866 rad/s ↻

P13. $v_D = 11.6$ m/s ←, $v_E = 3.6$ m/s →, $v_F = 8.59$ m/s $\theta = 62.24°$ ↖, $v_H = 5.65$ m/s $\theta = 45°$ ↖

P14. $\omega = 4$ rad/s ↻, $v_P = 5.6$ m/s ↗, $v_Q = 8$ m/s →, $v_R = 5.656$ m/s ↘

P15. $v_C = 0.75$ m/s ←, $v_D = 2.83$ m/s ↖

P16. $\omega_{BC} = 0.386$ rad/s ↻, $\omega_{roller} = 1.89$ rad/s ↻

P17. $v_A = 0.237$ m/s →

P18. $\omega_{AB} = 3.718$ rad/s ↻

P19. $v_B = 0.15$ m/s →, $v_C = 0.086$ m/s ↑

P20. $\omega_{BC} = 6.67$ rad/s ↻, $v_C = 3$ m/s ↓, $v_M = 1.58$ m/s ↘ 71.56°

P21. $\omega_{BD} = 61.99$ r/s ↺, $v_D = 13.08$ m/s →

P22. $\omega_{AC} = 37.5$ r/s ↺, $v_C = 21.83$ m/s ↙, $v_B = 16.27$ m/s ↙

P23. $\omega_{BC} = 1$ r/s ↺, $v_C = 0.776$ m/s →

Chapter 14

Exercise 14.1

P1. a) $Ixx_G = 114.3$ cm⁴; $Iyy_G = 37.33$ cm⁴; $I_{AA} = 226.3$ cm⁴; $I_{BB} = 457.3$ cm⁴; $I_{CC} = 814.3$ cm⁴; $I_{DD} = 289.3$ cm⁴.
b) $Ixx_G = 562.5$ cm⁴; $Iyy_G = 90$ cm⁴; $I_{AA} = 1687.5$ cm⁴; $I_{BB} = 270$ cm⁴; $I_{CC} = 1215$ cm⁴; $I_{DD} = 5062.5$ cm⁴.
c) $Ixx_G = 68.56$ cm⁴; $Iyy_G = 245.4$ cm⁴; $I_{AA} = 245.4$ cm⁴; $I_{BB} = 735.8$ cm⁴ ; $I_{CC} = 1659.1$ cm⁴ ; $I_{DD} = 1227.2$ cm⁴
d) $Ixx_G = 4.439$ cm⁴; $Iyy_G = 4.439$ cm⁴; $I_{AA} = 15.9$ cm⁴; $I_{BB} = 40.97$ cm⁴

P2. $I_{xx} = 1616.95$ cm⁴, $I_{yy} = 8962.2$ cm⁴

P3. $I_{XX} = 404.6$ cm⁴, $I_{YY} = 667.5$ cm⁴

P4. $I_{XX} = 2529.2$ cm⁴, $I_{YY} = 4613.6$ cm⁴

P5. $\bar{Y} = 7.587$ cm; $I_{xx_G} = 423.5$ cm⁴, $I_{yy_G} = 255.3$ cm⁴

P6. $I_{xx} = 316.95$ cm⁴, $I_{yy} = 1410.9$ cm⁴

P7. $I_{xx} = 170.67$ cm⁴

P8. $I_{xx} = 899.1$ cm⁴, $I_{yy} = 2113.5$ cm⁴

P9. $I_{xx} = 221073$ cm⁴, $I_{yy} = 71073$ cm⁴

P10. $I_{xx} = 90.75$ m⁴, $I_{yy} = 304.46$ m⁴

P11. $I_{xx_G} = 290000$ cm⁴, $I_{yy_G} = 560000$ cm⁴

P12. $\bar{X} = 5.286$ cm; $\bar{Y} = 3$ cm; $I_{xx} = 639$ cm⁴, $I_{yy} = 1976$ cm⁴ $I_{xx_G} = 261$ cm⁴, $I_{yy_G} = 802.4$ cm⁴

P13. $\bar{X}, \bar{Y} = 4.647$ cm, 1.728 cm; $I_{xx_G} = 21.01$ cm⁴, $I_{yy_G} = 48.46$ cm⁴

P14. $I_{xx} = 1036944$ cm⁴, $I_{yy} = 1564704$ cm⁴, $J_O = 2601648$ cm⁴ $k_{xx} = 25.02$ cm, $k_{yy} = 30.74$ cm

P15. $\bar{Y} = 16.02$ cm; $I_{xx_G} = 99614$ cm⁴; $I_{yy_G} = 19719$ cm⁴; $k_{xx_G} = 14.64$cm $J_G = 119333$ cm⁴

★ ★ ★