Engineering Mechanics

University Examination

Solved Question Papers

2013 to 2018

Engineering Mechanics (Sem-I) May-2013

(Revised Course)

Time : 3 Hours **Total Marks : 80**

N.B. : (1) Question No.1 is compulsory.

(2) Attempt any three questions from remaining Question Nos. 2 to 6.

(3) Assume suitable data wherever required.

(4) Figures to the right indicate marks.

1. (a) Find forces P and Q such that resultant of given system is zero. 4

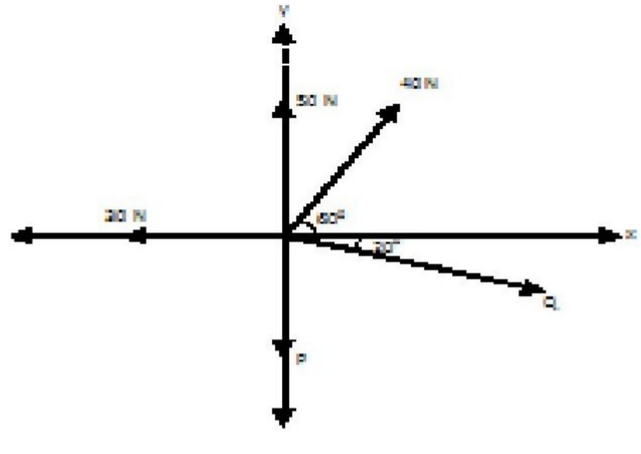

(b) A cylinder B, W_B = 1000 N, dia. 40 cm, hangs by a cable AB = 40 cm rests against a smooth wall. Find out reaction at C and T_{AB}. 4

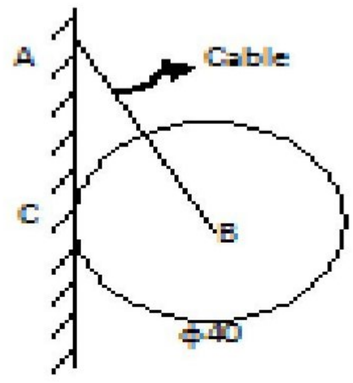

(c) A block of weight 1000 N is kept on a rough inclined surface. Find out range of P for which the block will be in equilibrium. 4

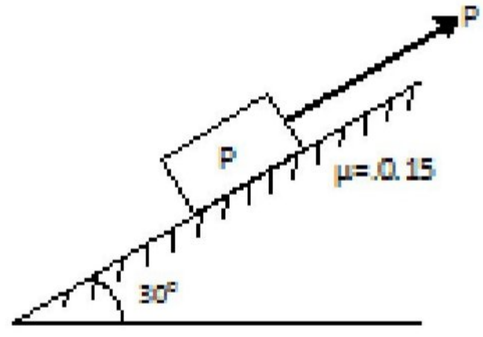

(d) A curvilinear motion of a particle is defined by V_x = 25-8t m/s and y = 48-3t2 m. At t = 0, x = O. Find out position, velocity and acceleration at t = 4 sec. 4

(e) State D' Alembert's principle with two examples. 4

2. (a) Find out resultant of given (lever) force system w.r.t. "B". 6

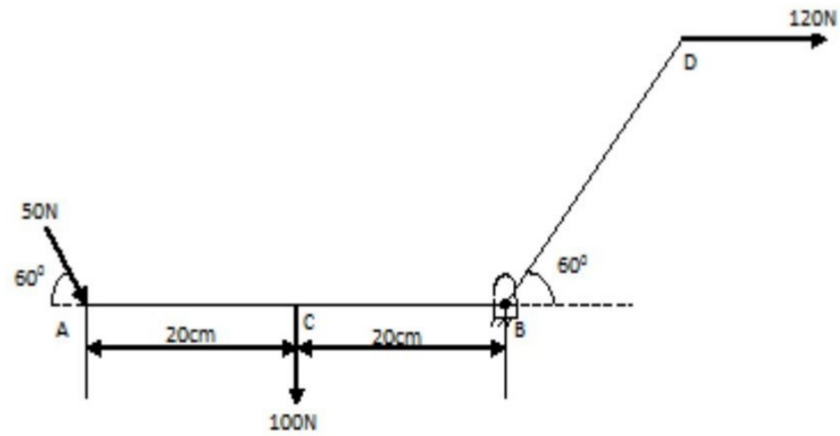

(b) Two identical cylinders dia 100 mm weight 200 N are placed as shown. All contacts are smooth. Find out reactions at A, B and C. 8

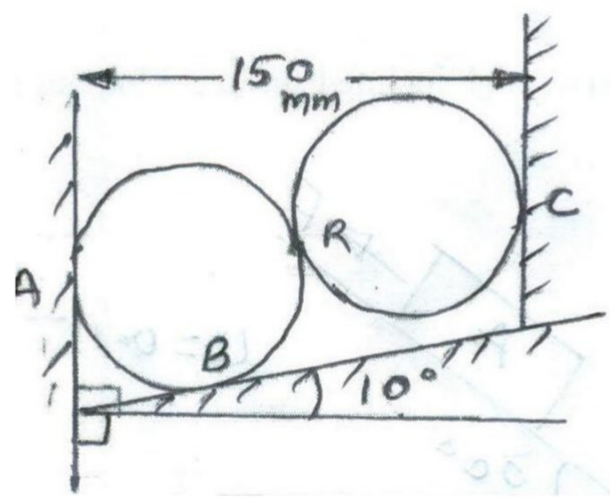

(c) A ball of mass m kg hits an inclined smooth surface with a velocity V_A = 3 m/s. Find out velocity of rebound. 6

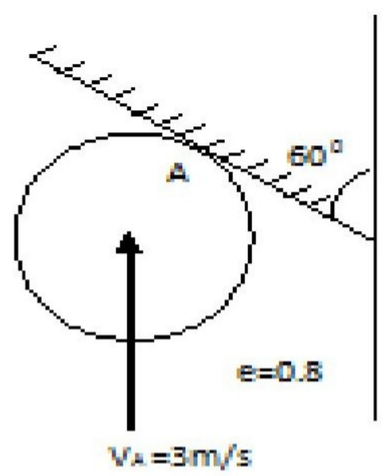

3. (a) Find Centroid of the given shaded area. 8

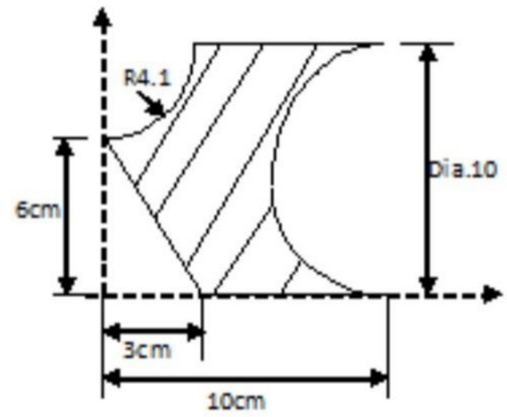

(b) Explain conditions for equilibrium for forces in space. 6

(c) Explain work energy principle. 6

4. (a) Find the support reactions at Hinge A and Roller B. 8

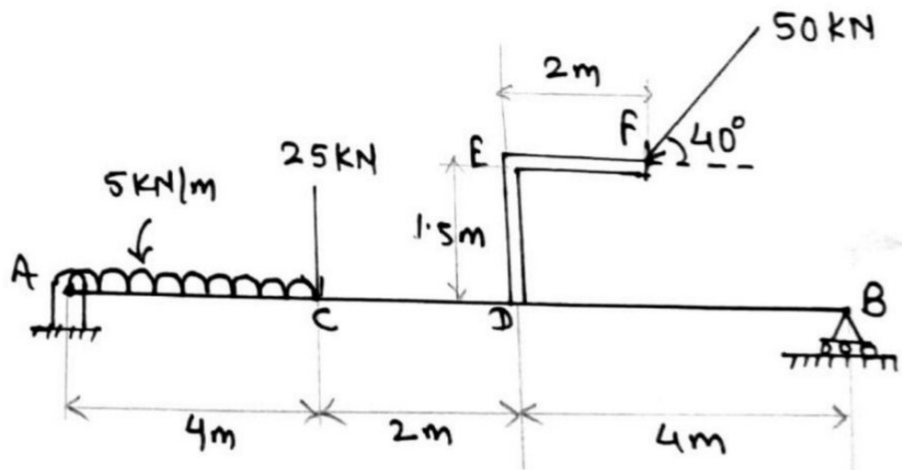

(b) Explain x-t, v-t and a-t curves in Kinematics. 6

(c) Collor B moves up with constant velocity $V_B = 2$ m/s. Rod AB is pinned at B. Find out angular velocity of AB and velocity of A. 6

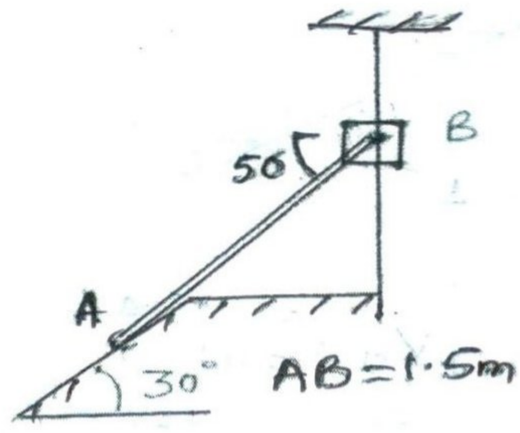

5. (a) Find out forces in FB and BE using method of section and other members by method of joints. AF = FB = FE = ED = 2 m and CE = 3m. 8

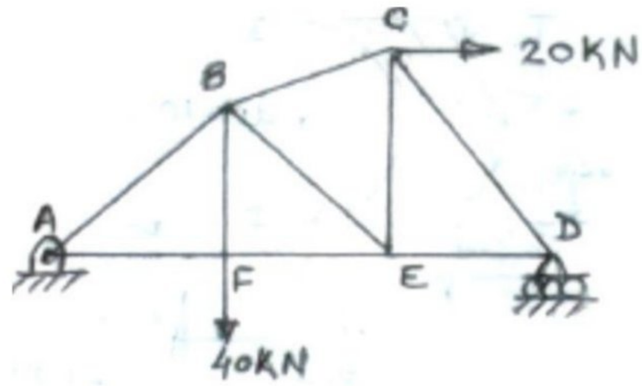

(b) A stone is thrown vertically upwards and returns to the starting point at the ground in 6 sec. Find out max. height and initial velocity of stone. 6

(c) Explain instantaneous centre of rotation. 6

6. (a) Force F = (3i – 4j + 12k) N acts at poit A (1, –2, 3). Find 4

(i) Moment of force about origin.

(ii) Moment of force about point B (2, 1, 2)m.

(b) Find out min. value of P to start the motion. 8

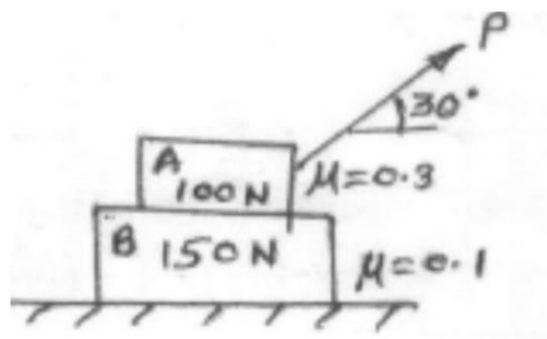

(c) For a particle in rectilinear motion a = – 0.05 v^2 m/s^2 at v = 20 m/s, x = 0. Find x at v = 15 m/s and acceleration at x = 50 m. 4

(d) Sphere A is supported by two wires AB, AC. Find out tension in wire AC : 4

(i) Before AB is cut

(ii) just after AB is cut.

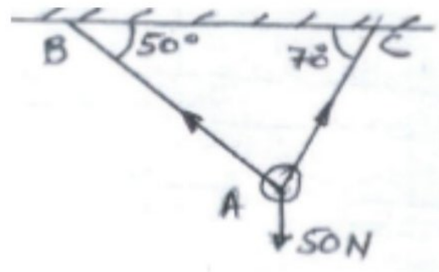

****

Engineering Mechanics (Sem-I) May-2013

Solution

1. (a) Find forces P and Q such that resultant of given system is zero. 4

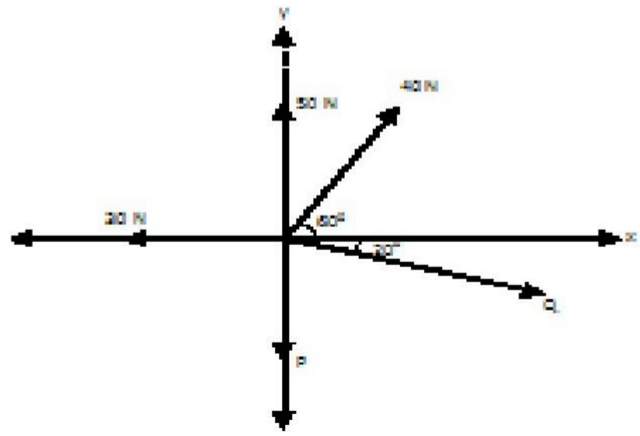

(b) A cylinder B, W_B = 1000 N, dia. 40 cm, hangs by a cable AB = 40 cm rests against a smooth wall. Find out reaction at C and T_{AB}. 4

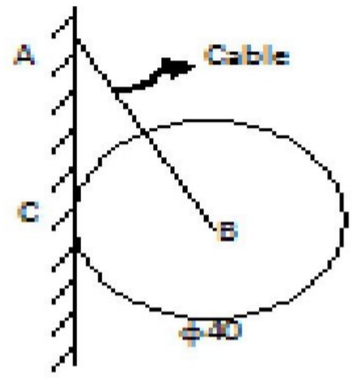

(c) A block of weight 1000 N is kept on a rough inclined surface. Find out range of P for which the block will be in equilibrium. 4

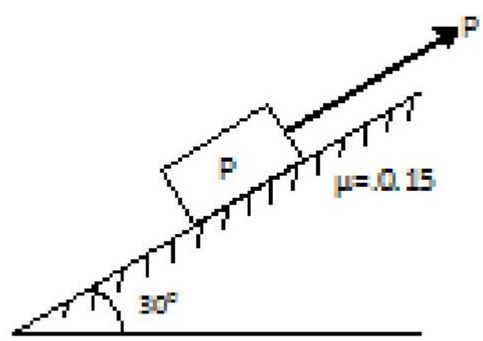

(d) A curvilinear motion of a particle is defined by V_x = 25-8t m/s and y = 48-3t2 m. At t = 0, x = O. Find out position, velocity and acceleration at t = 4 sec. 4

(e) State D′ Alembert's principle with two examples. 4

Sol. 1 (a) $\sum Fx = 40\cos 60 - 30 + Q\cos 20 = 0$

Q = 10.64 N

$\sum Fy = 40\sin 60 + 50 - P - 10.04\sin 20 = 0$

P = 88.26 N

Sol. 1(b)

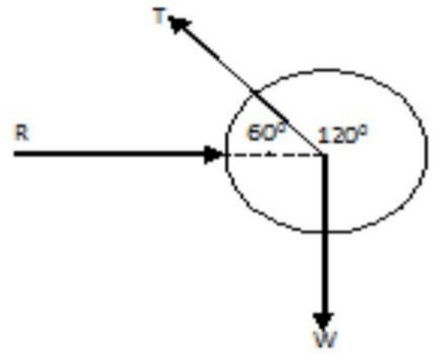

$$\frac{T}{\sin 90} = \frac{W}{\sin 120} = \frac{R}{\sin 150}$$

∴ T = 1153.93N & R = 576.96N

Sol. 1 (c)

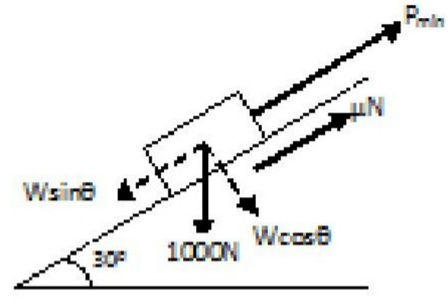

Case 1: $\sum Fx = 0$; P_{min} – Wsin30 + $\mu N = 0$

P_{min} = 370.1N

Case 2: $\sum Fx = 0$; P_{max} – Wsin30 - $\mu W cos30 = 0$

P_{max} = 629.9N

Sol. 1 (d) $\frac{dx}{dt} = 25 - 8t$

Integrating we get, x= 25t – $4t^2$

$a_x = \frac{dv_x}{dt} = -8$

At t = 4 sec, x = 36m, y = 0, $\bar{r} = 36i + 0j$,

r = 36m, y = 48 – $3t^2$; $v_y = \frac{dy}{dt} = -6t$

$a_y = \frac{dv_y}{dt} = -6$

After solving v_x *and* v_y *we get* ; v = 25 m/s ; After solving a_x *and* a_y *we get* ; a = 10 m/s^2

Sol. 1 (e) The reaction due to the inertia of an accelerated body is equal and opposite to the force causing the acceleration and results in a condition of dynamic equilibrium.

2. (a) Find out resultant of given (lever) force system w.r.t. "B". **6**

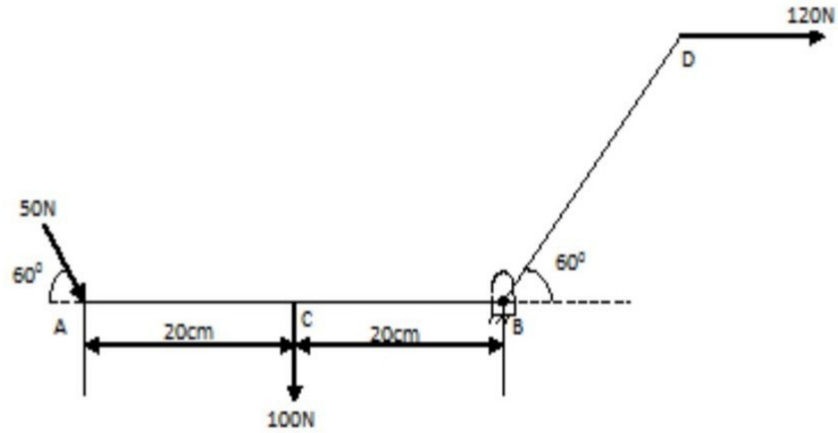

(b) Two identical cylinders dia 100 mm weight 200 N are placed as shown. All contacts are smooth. Find out reactions at A, B and C. **8**

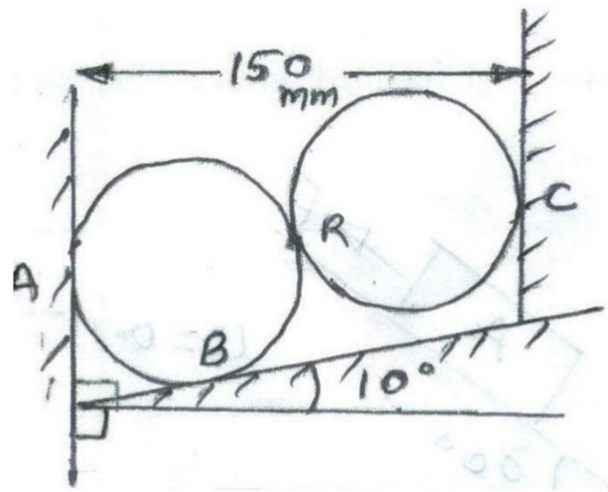

(c) A ball of mass m kg hits an inclined smooth surface with a velocity V_A = 3 m/s. Find out velocity of rebound. **6**

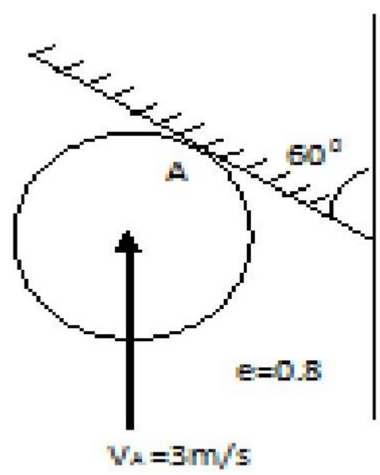

Sol. 2 (a) $\sum Fx = 50 \cos 60 + 120$

$\sum Fy = 50 \sin 60 - 100 - 143.3$

R = 203.86N

$\theta = 44.66^o$

$\sum M_B = [(50 \sin 60) \times 40] + [100 \times 20] - [120 \times 34.14]$

d = 2.08m

Sol. 2 (b)

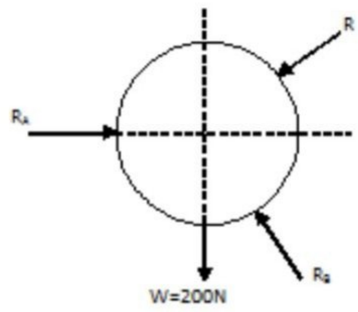

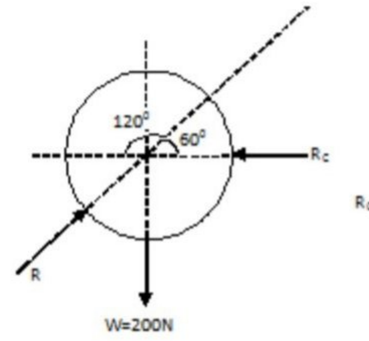

$\theta = 60^o$

$$\frac{R_C}{\sin 150} = \frac{W}{sin120} = \frac{R}{\sin 90}$$

R = 230.94 N & $R_C = 115.47N$

$\sum Fx = 0$; $R_A - R_B \sin 10 - R \cos 60 = 0$..(1)

$\sum Fy = 0$; $-200 + R_B \cos 10 - R \sin 60 = 0$..(2) From (1) and (2) we get,

$R_B = 406.5$ N & $R_A = 185.77$N

Sol. 2 (c) $V_{An} = V_A \cos 30$

$V_{An} = 2.6\, m/s$

$V_{At} = V_A \sin 30$

$V_{An} = 1.5\, m/s$

Special Cases of Oblique Impact:

$V'_{At} = V_{At} = 1.5\, m/s$

$V'_{An} = e \times V_{An} = 0.8 \times 2.6 = 2.08\, m/s$

3. (a) Find Centroid of the given shaded area. 8

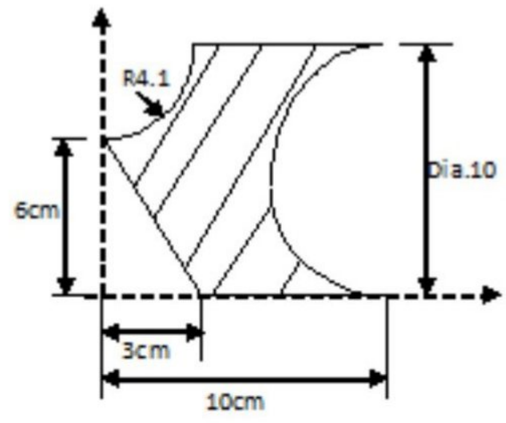

(b) Explain conditions for equilibrium for forces in space. 6

(c) Explain work energy principle. 6

Sol. 3 (a)

Components	Area	Xi	Yi	Ai Xi	Ai Yi
Quarter Circle	$\frac{\pi R^2}{4} = 12.56$	1.69	8.3	21.22	104.27
Right angle Triangle	$\frac{1}{2} \times b \times h = 9$	1	2	9	18
Semicircle	$\frac{\pi R^2}{2} = 39.26$	7.87	5	309.28	196.3
Square	$b \times h = 100$	5	5	500	500

$\sum Ai = 39.18 cm^2$

$$\sum Aixi = 160.5cm^3$$
$$\sum Aiyi = 181.43cm^3$$
$$\bar{x} = \frac{\sum Aixi}{\sum Ai} = 4.09\ cm$$
$$\bar{y} = \frac{\sum Aiyi}{\sum Ai} = 4.65\ cm$$

Sol. 3 (b) **Conditions of equilibrium for Concurrent forces in space:** If a particle is in equilibrium the components of resultant must be equal to zero. $R_X = 0$, $R_Y = 0$, $R_Z = 0$, $\sum F_X = 0$, $\sum F_Y = 0$, $\sum F_Z = 0$

Non-concurrent & parallel forces in space: $R_X = 0$, $R_Y = 0$, $R_Z = 0$, $M = 0$, $\sum F_X = 0$, $\sum F_Y = 0$, $\sum F_Z = 0$, $\sum M = 0$

Sol. 3 (c) The principle of work–energy (also known as the work and kinetic energy principle) states that the work done by all forces acting on a particle (the work of the resultant force) equals the change in the kinetic energy of the particle.

Work-Energy Principle, $U_{1\text{-}2} = KE_2 - KE_1$

$U_{1\text{-}2}$ = Algebraic sum of work done by all forces from positions 1 & 2

KE_2 = Kinetic energy at position 2

KE_1 = Kinetic energy at position 1

4. (a) Find the support reactions at Hinge A and Roller B. **8**

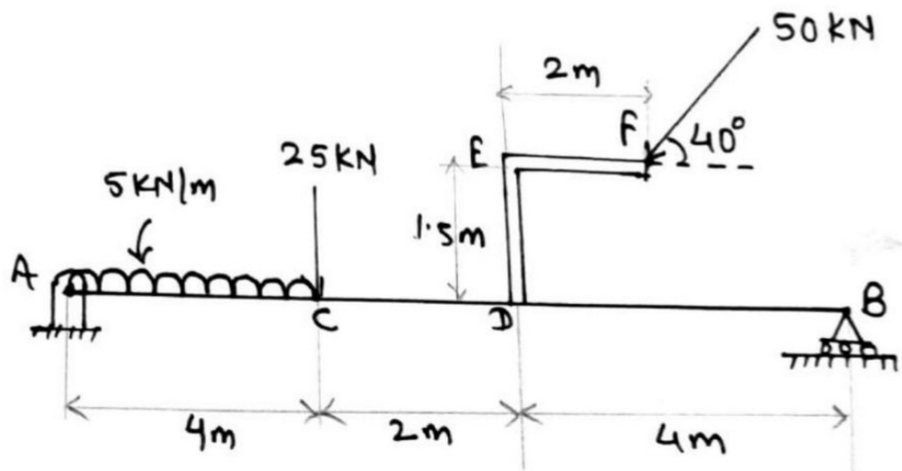

(b) Explain x-t, v-t and a-t curves in Kinematics. **6**

(c) Collor B moves up with constant velocity V_B = 2 m/s. Rod AB is pinned at B. Find out angular velocity of AB and velocity of A. **6**

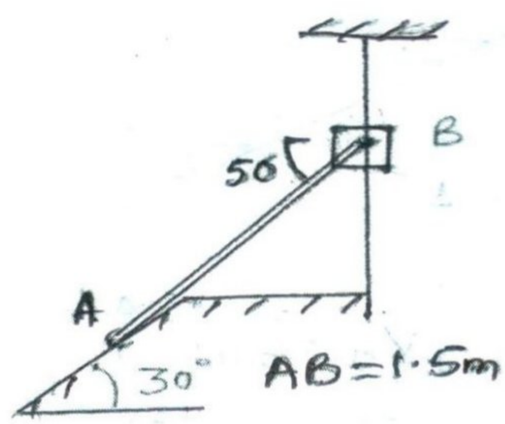

Sol.4 (a) $\sum Fx = 0;$

$H_A - 30 \cos 40 = 0$ …….(1)

$H_A = 22.98$ kN

$\sum Fy = 0;$

$V_A + V_B = 20 + 25 + 30 \sin 40$

$\sum M = 0;$

$-(20 \times 2) - (25 \times 4) - (30\sin 40 \times 8) + (30\cos 40 \times 1.5) + 10V_B = 0$

$V_B = 25.98$kN & $V_A = 38.9$kN

$R_A = 44.66$ kN & $\theta = 59^o$

Sol.4 (b)

a. Uniform Velocity Motion Curves

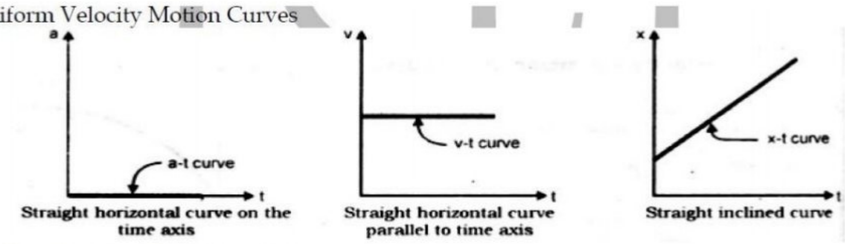

b. Uniform Acceleration Motion Curves

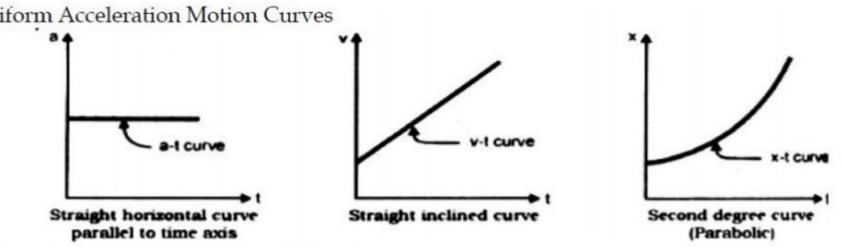

c. Variable (Linear) Acceleration Motion Curves

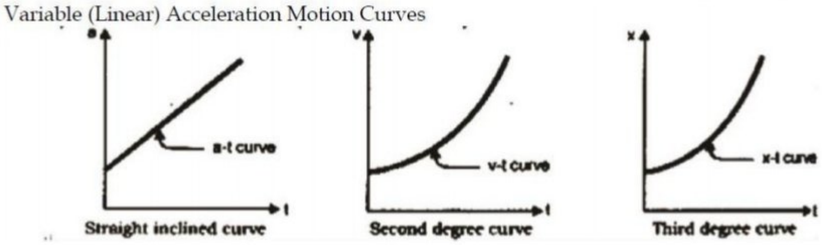

Sol.4 (c)

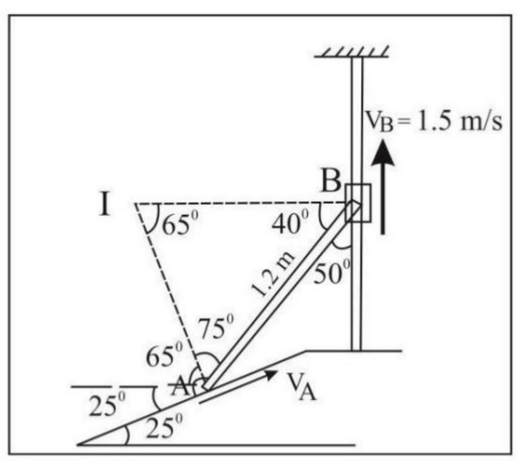

$$\frac{1.5}{\sin 60} = \frac{AI}{\sin 50} = \frac{BI}{\sin 70}$$

AI = 1.326m

BI = 1.627m

$V_B = \omega_{AB} \times BI$

$\omega_{AB} = 1.229\ rad/s$

$V_A = 1.629$ m/s

5. (a) **Find out forces in FB and BE using method of section and other members by method of joints. AF = FB = FE = ED = 2 m and CE = 3m.** **8**

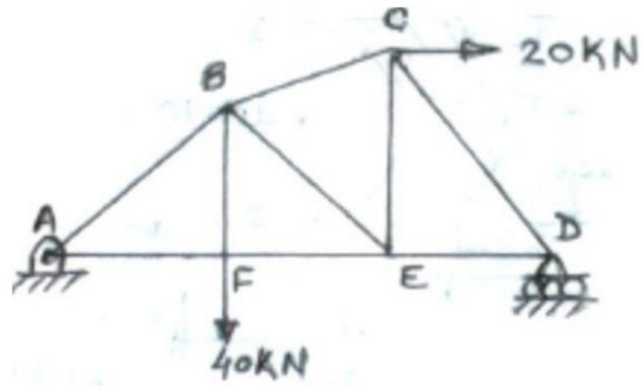

(b) **A stone is thrown vertically upwards and returns to the starting point at the ground in 6 sec. Find out max. height and initial velocity of stone.** **6**

(c) **Explain instantaneous centre of rotation.** **6**

Sol.5 (a) $H_A = -20kN$, $V_A = 16.66kN$, $V_D = 23.33kN$, Joint A

$\sum Fx = 0$; $F_{AB} \cos45 + F_{AF} + H_A = 0$

$\sum Fy = 0$; $F_{AB} \sin45 - 16.66 = 0$

$F_{AB} = -23.57$ kN & $F_{AF} = 36.66$kN

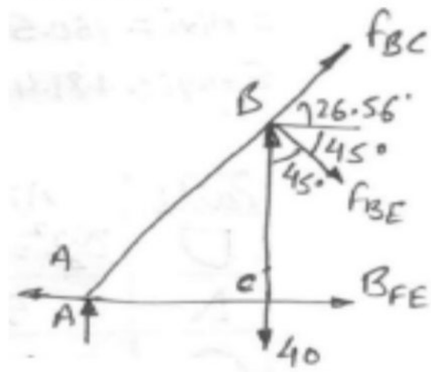

Joint F; $F_{EF} = 36.66$ kN & $F_{BF} = 40$ kN

$\sum Fx = 0$; $F_{BC} \cos26.5 + F_{BE} \cos45 + F_{EF} - H_A = 0$

$\sum Fy = 0$; $16.16 - 40 - F_{BE} \cos45 + F_{BC} \sin26.56 = 0$

$F_{BC} = 4.98$ kN, $F_{BE} = -29.86$ kN, $F_{ED} = 15.55$ kN

$F_{CE} = 21.11$ kN, $F_{CD} = -28.04$ kN

Sol.5 (b) $u = u$, $v = -$, $s = 0$, $g = 9.81 m/s^2$, $t = 6sec$

$s = ut - 0.5\, gt^2$

$0 = u(6) - 0.5(9.81)(36)$

$u = 29.43 m/s$

$u = 29.43 m/s$, $v = 0$, $s = h_{max}$, $g = 9.81 m/s^2$

$v^2 = u^2 - 2gs$

$0 = (29.43)^2 - 2(9.81)(h_{max})$

$h = 44.14m$

Sol.5 (c) Instantaneous centre of rotation is the point around which the body having GPM is supposed to be virtually rotated. I.C.R. is not moving and exists for just an instant. When the body continues to move, for that particular instant, a new instantaneous centre of rotation may be located and can be determined.

The point of instantaneous centre of rotation has zero velocity at that instant. The point of instantaneous centre can be located on the body or outside the body.

6. (a) Force F = (3i – 4j + 12k) N acts at poit A (1, –2, 3). Find **4**

(i) Moment of force about origin.

(ii) Moment of force about point B (2, 1, 2)m.

(b) Find out min. value of P to start the motion. **8**

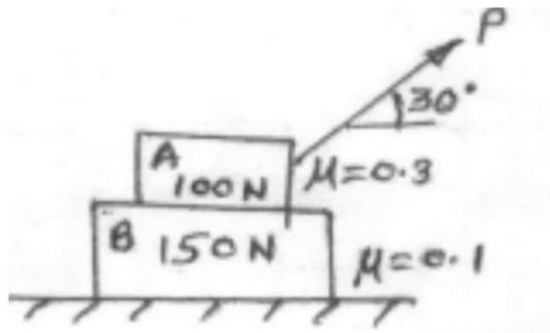

(c) For a particle in rectilinear motion a = – 0.05 v² m/s² at v = 20 m/s, x = 0. Find x at v = 15 m/s and acceleration at x = 50 m. **4**

(d) Sphere A is supported by two wires AB, AC. Find out tension in wire AC : **4**

(i) Before AB is cut

(ii) just after AB is cut.

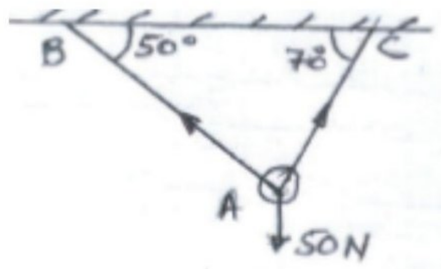

Sol.6 (a) $r_{AD} = i - 2j + 3k$

$$\text{Moment} = r_{AD} \times F = \begin{vmatrix} i & j & k \\ 1 & -2 & 3 \\ 3 & -4 & 12 \end{vmatrix}$$

$$= -12i - 3j + 2k$$

$$r_{AB} = i + 3j - k$$

$$\text{Moment} = r_{AD} \times F = \begin{vmatrix} i & j & k \\ 1 & 3 & -1 \\ 3 & -4 & 12 \end{vmatrix}$$

$$= 32i - 15j - 13k$$

Sol.6 (b)

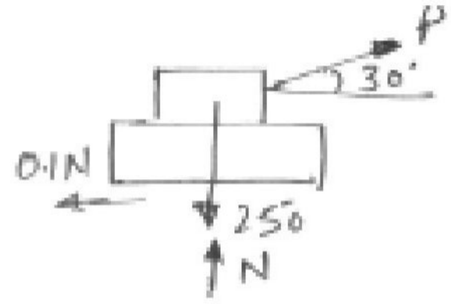

Case (i) $\sum Fx = 0$; P cos30 – 0.1N = 0

$\sum Fy = 0$; N – 250 + P sin30 = 0

P = 27.79N & N = 236.35N

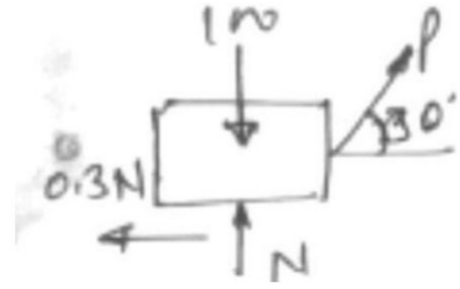

Case (ii) $\sum Fx = 0$; P cos30 – 0.3N = 0

$\sum Fy = 0$; N + P sin30 = 100

P = 29.52N & N = 85.32N

Pmin = 27.79N

Sol.6 (c)

$a = \frac{vdv}{dx}$; $\frac{vdv}{-0.05v^2} = dx$

Integrating both side

x = -20 $\log_e (\frac{v}{20})$

v = 15m/s, x = 5.745m

x = 50m , v = 1.642m/s

Sol.6 (d)

After cutting rope AB equilibrium gets lost and system becomes dynamic. Now sphere follow curvilinear motion.

$a_n = \frac{v^2}{r}$ & $v = 0$ (at start of motion)

Apply Newton's second law,

$\sum Fy = ma_n$

T_{AC} – 50 sin70 = ma_n

T_{AC} = 46.98N

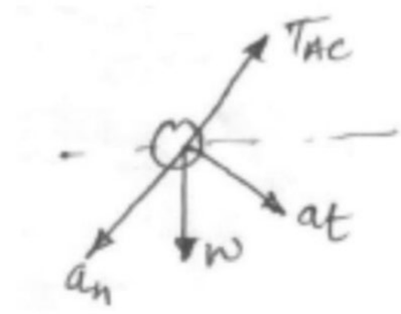

Before cut

$$\frac{W_A}{sin\,60} = \frac{T_C}{sin140} = \frac{T_B}{sin160}$$

T_C = 37.11 N

T_B = 19.74 N

****

Engineering Mechanics (Sem-I) May-2014

(Revised Course)

Time : 3 Hours **Total Marks : 80**

N.B. : (1) Question No.1 is compulsory.

(2) Attempt any three questions from remaining Question Nos. 2 to 6.

(3) Assume suitable data wherever required.

(4) Figures to the right indicate marks.

1. (a) Two concurrent forces P and Q acts at O such that their resultant acts along x-axis. Determine the magnitude of Q and hence the resultant 4

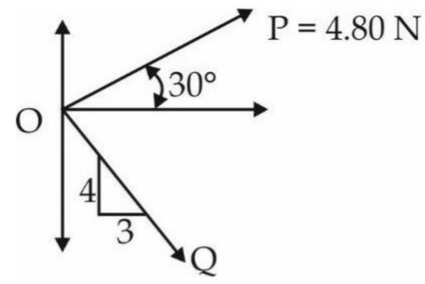

(b) A cylinder with 1500 N weight is resting in an unsymmetrical smooth groove as shown in figure. Determine the reactions at the points of contacts. 4

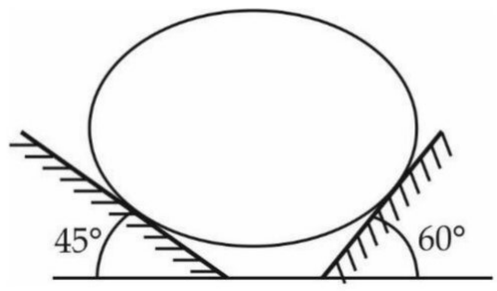

(c) Explain Angle of Friction, Angle of Repose and the relation between the two. 4

(d) A sprinter in a 100 m race accelerates uniformly for the first 35 m and then runs with constant velocity. If the sprinter's time for the first 35 m is 5.4 seconds, determine his time for the race. 4

(e) A motorist travelling at a speed of 90 kmph suddenly applies the brakes and comes to rest after skidding 100 m. Determine the time required for the car to stop and coefficient of kinetic friction between the tires and the road. 4

2. (a) A system of forces acting on a bell crank is as shown. Determine the magnitude, direction and the point of application of the resultant w.r.t. 'O'. 6

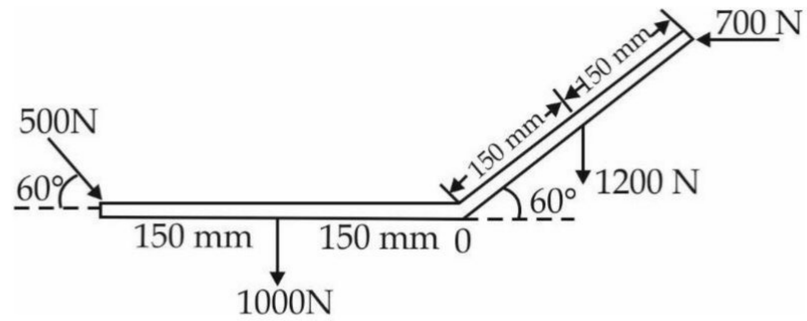

(b) Two cylinders are kept in a channel as shown in figure. Determine the reactions at all the contact points A, B, C and D. Assume all surfaces smooth. 8

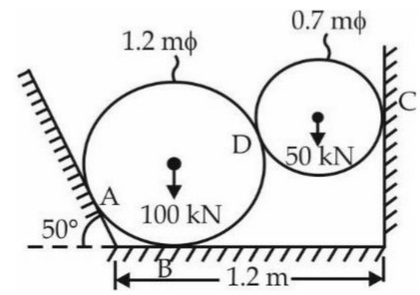

(c) A ball of mass 'm' hits directly to a similar ball of mass 'm' which is at rest. The velocity of first ball after impact is zero. Half of the initial kinetic energy is lost in impact. Find coefficient of restitution. 6

3. (a) Determine the Centre of gravity of the shaded area. 8

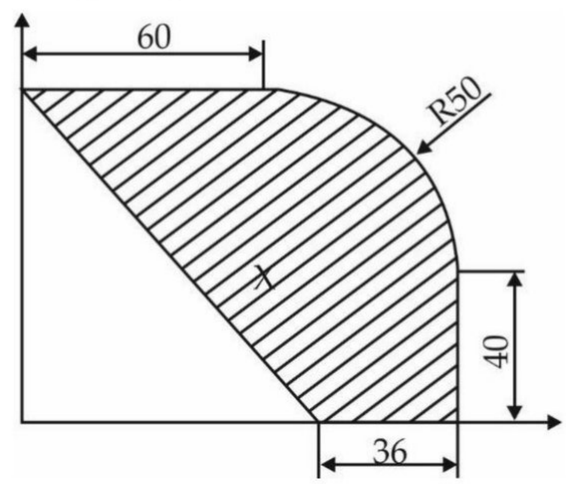

(b) The lines of action of three forces concurrent at origin 'O' pass respectively through points A(–1, 2, 4), B(3, 0, –3) and C(2, –2, 4) m. The magnitude of forces are 40 N, 10N and 30 N respectively. Determine the magnitude and direction of their resultant. 6

(c) A 30 N block is released from rest. It slides down a rough incline having coefficient of friction 0.25. Determine the maximum compression of the spring. 6

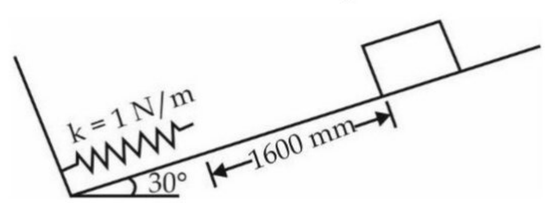

4. (a) Find the support reaction at B and the load P, for the beam shown in figure if the reaction at support A is zero. 8

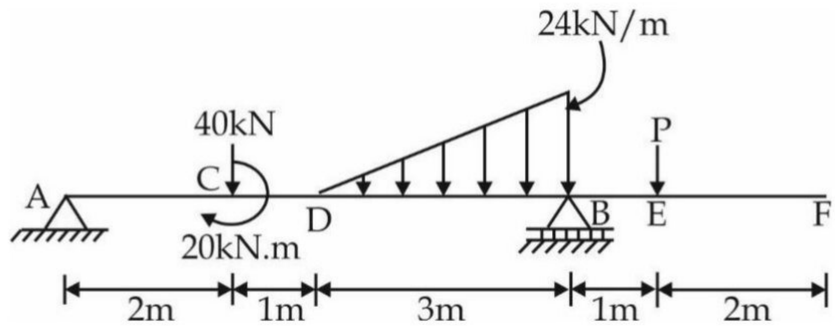

(b) A gunman fires a bullet with a velocity of 100 m/s, 50° upwards from the top of a bill 300 m high in hit a bird. The bullet misses its target and finally lands on the ground. Calculate 6

(a) the maximum height reached by the bullet above the ground.

(b) total time of flight

(c) velocity with which the bullet hits the ground.

(c) In the mechanism shown the angular velocity of link AB is 5 rad/sec anticlockwise. At the instant shown, determine the angular velocity of link BC and velocity of piston C. 6

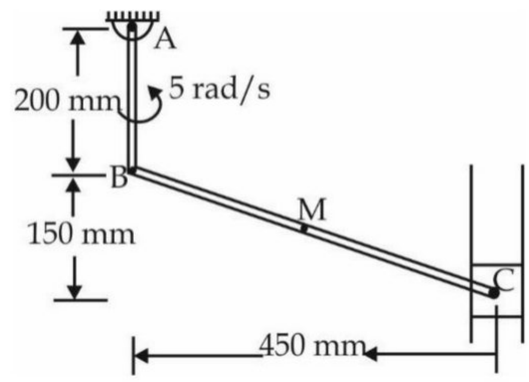

5. (a) Determine the forces in members BC, CE and DE by method of sections and all other members by method of joints. Give the result in a table. 8

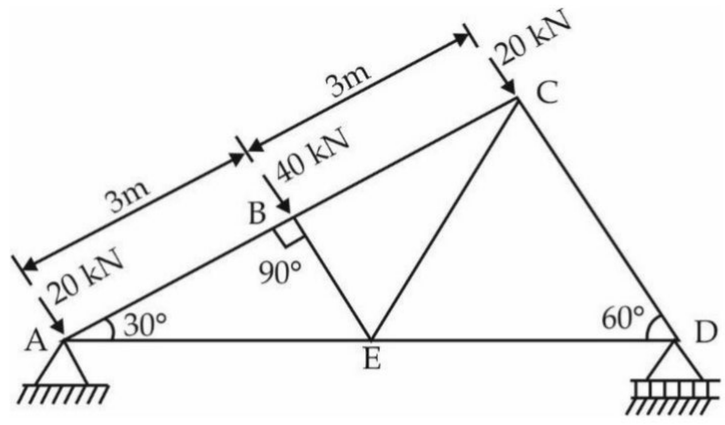

(b) Due to slipping, points A and B on the rim of the disk have the velocities as shown in figure. Determine the velocities of the centre point C and point D on the rim at this instant. Take radius of disk 0.24m. 6

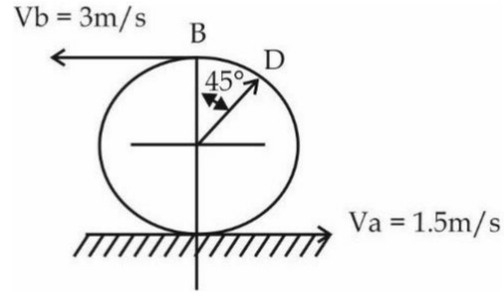

(c) A particle moves in a straight line with a velocity-time diagram shown in figure If S = 25m at t = 0, draw displacement-time and acceleration time diagram for 0 to 24 seconds. 6

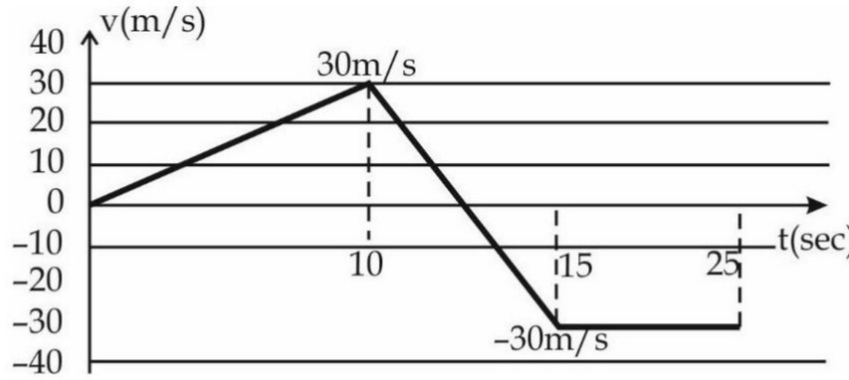

6. (a) The mass of A is 23 kg and mass of B is 36 kg. The coefficient of friction are 0.4 between A and B, and 0.2 between ground and block B. Assume smooth drum. Determine the maximum mass of M at impending motion. 8

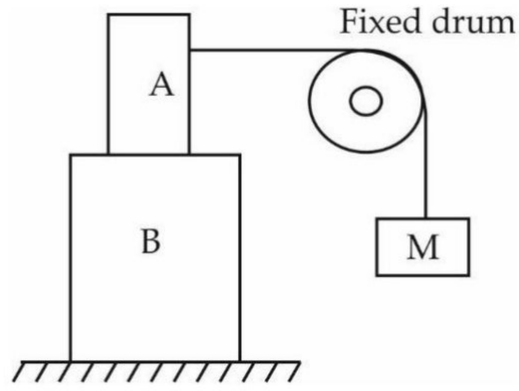

(b) A force of 1200 N acts along PQ, P(4, 5, –2) and Q(–3, 1, 6) m. Calculate its moment about a point A(3, 2, 0) m. 4

(c) A point moves along the path $y = x^2/3$ with a constant speed of 8 m/s. What are the x and y components of the velocities when x = 3. What is the acceleration of the point when x = 3. 4

(d) A two-step pulley supports two weights A = 40 N and B = 60 N as shown. Find the downward acceleration of A if radius of bigger pulley is double that of the smaller one. Neglect friction and inertia of pulley. 4

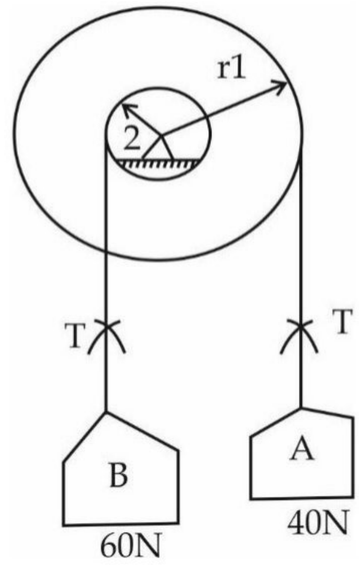

****

Engineering Mechanics (Sem-I) May-2014

Solutions

1. (a) **Two concurrent forces P and Q acts at O such that their resultant acts along x-axis. Determine the magnitude of Q and hence the resultant** **4**

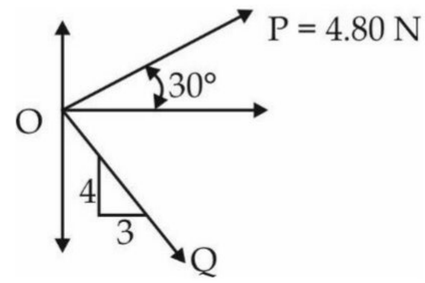

(b) **A cylinder with 1500 N weight is resting in an unsymmetrical smooth groove as shown in figure. Determine the reactions at the points of contacts.** **4**

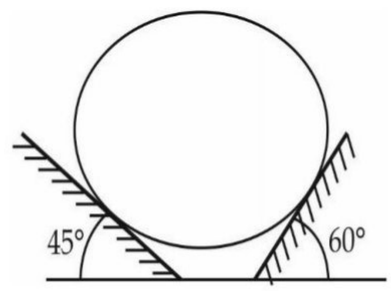

(c) **Explain Angle of Friction, Angle of Repose and the relation between the two.** **4**

(d) **A sprinter in a 100 m race accelerates uniformly for the first 35 m and then runs with constant velocity. If the sprinter's time for the first 35 m is 5.4 seconds, determine his time for the race.** **4**

(e) **A motorist travelling at a speed of 90 kmph suddenly applies the brakes and comes to rest after skidding 100 m. Determine the time required for the car to stop and coefficient of kinetic friction between the tires and the road.** **4**

Sol^n 1. (a) $\cos\theta = \frac{3}{5} = 53.13$

Since it is given that the resultant is horizontal,

$\sum F_y = 0;\ 480 \sin 30 - Q \sin 53.13 = 0$

$\therefore Q = 300N$

Now,

$\sum F_x = R;\ 480 \cos 30 + 300 \cos 53.13 = R$

$\therefore R = 595.7\ N\ (\longrightarrow)$

Sol^n 1. (b) Since the body is in equilibrium,

Applying Lami's Theorem,

$$\frac{1500}{\sin 105} = \frac{R1}{\sin 120} = \frac{R2}{\sin 135}$$

$\therefore R_1 = 1344.86N$

& $R_2 = 1098.07N$

Sol^n 1. (c)

Angle of Friction (ϕ): It is the angle made by the resultant reaction (force) of normal reaction and limiting frictional force to the normal reaction.

$\Phi = \tan^{-1} \mu$

Angle of Repose (θ): The term" angle of repose" is used with reference to an inclined surface. It is the maximum angle made by the inclined plane with the horizontal for which a body kept on the incline remains in impending sliding motion without any external force acting on it other than its own weight only.

Sol^n 1. (d) Area below the v-t graph = displacement

$\therefore \frac{1}{2} \times 5.4 \times v = 35; v = 12.96$ m/s

Also, $(t - 5.4)\, v = 65$

$\therefore t = 10.41$ secs

Sol^n 1. (e) Given:

u = 90 km/hr = 25 m/s

v = 0

s = 100m

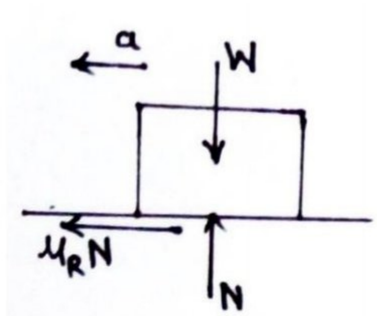

So, $v^2 = u^2 + 2as$, $0 = 25^2 + 2a \times 100$

$\therefore a = -3.125$ m/s^2

Also, $v = u + at$, $\therefore 0 = 25 + (-3.125) \times t$

$\therefore t = 8$ secs

Now,

$\sum F_y = 0, \therefore N = W$

$\sum F_x = ma, \therefore \mu N = ma = \frac{W}{g} \times 3.125$

$\therefore \mu_k = 0.3185$

2. (a) A system of forces acting on a bell crank is as shown. Determine the magnitude, direction and the point of application of the resultant w.r.t. 'O'. 6

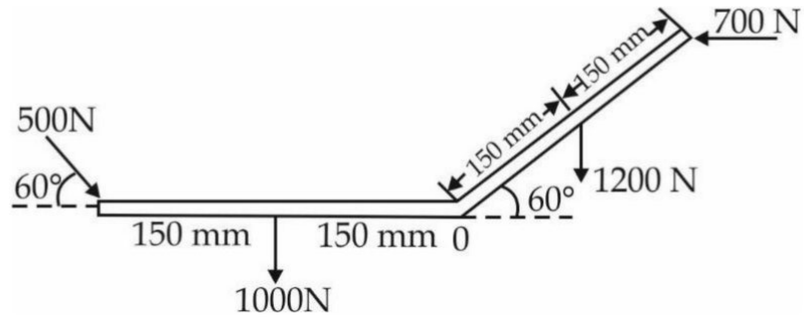

(b) Two cylinders are kept in a channel as shown in figure. Determine the reactions at all the contact points A, B, C and D. Assume all surfaces smooth. 8

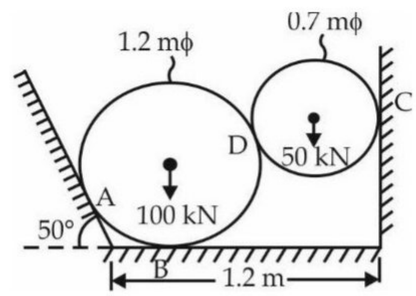

(c) A ball of mass 'm' hits directly to a similar ball of mass 'm' which is at rest. The velocity of first ball after impact is zero. Half of the initial kinetic energy is lost in impact. Find coefficient of restitution. 6

Sol^n 2. (a)

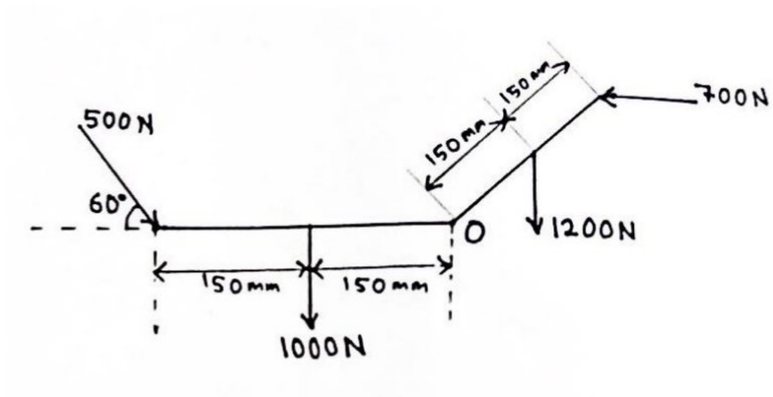

$\sum F_x = 500 \cos 60 - 700 = -450 = 450N\ (\leftarrow)$

$\sum F_y = -500 \sin 60 - 1000 - 1200 = -2633N = 2633N\ (\downarrow)$

$\therefore R = \sqrt{450^2 + 2633^2} = 2671.2N$

$\& \ \theta = \tan^{-1}\left(\frac{450}{2633}\right) = 80.3°$

$\sum M_o = R \times d$

$\therefore 500\sin60 \times 300 + 1000 \times 150 - 1200 \times 150\cos60 + 700 \times 300\sin60 = 2671.2 \times d$

$\therefore d = 139.17m$

Or $\sum M_o = \sum F_y \times X$; $X = 141.2m$

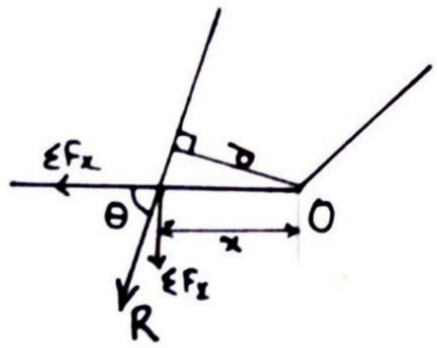

Sol^n 2. (b) In the Triangle as shown in the figure

$\tan 65 = \frac{0.6}{x1}$; $\therefore x_1 = 0.28m$

$x = 1.2 - x_1 = 0.57m$

$l = 0.6 + 0.35 = 0.95m$

$\cos\theta = \frac{x}{l} = \frac{0.57}{0.95} \therefore \theta = 53.13°$

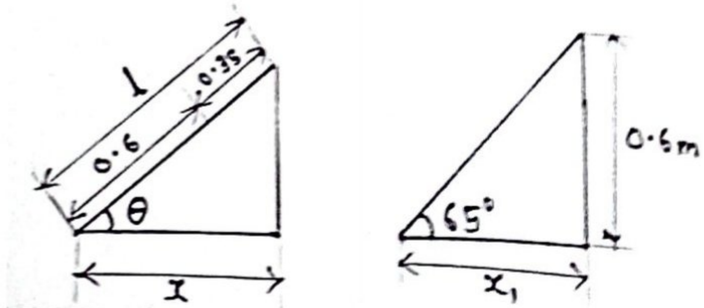

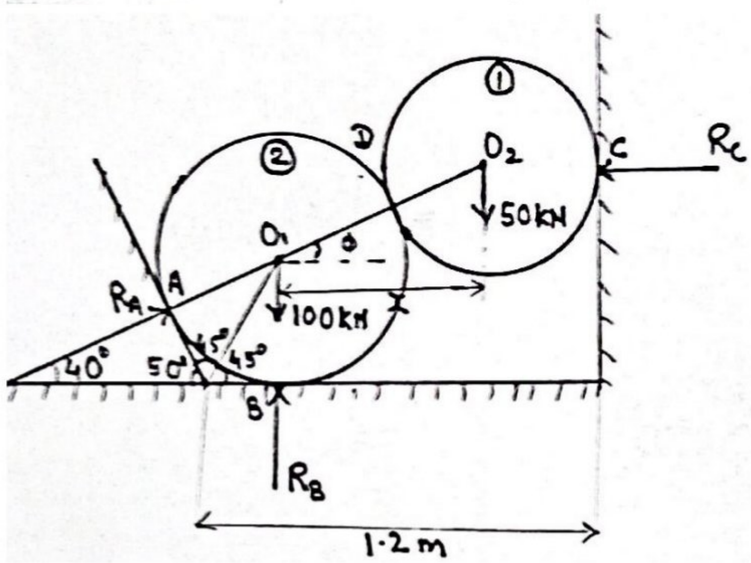

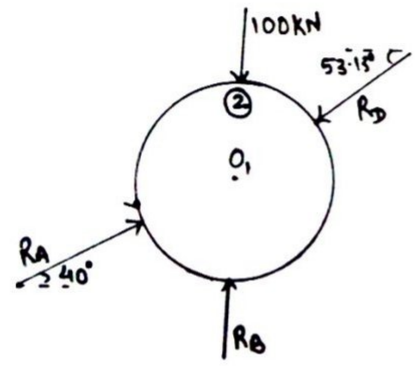

For Sphere 1, using Lami's Theorem,

$$\frac{Rc}{\sin(90+53.15)} = \frac{50}{\sin(180-53.13)} = \frac{Rd}{\sin 90}$$

$\therefore R_C = 37.5$ kN & $R_D = 62.5$ kN

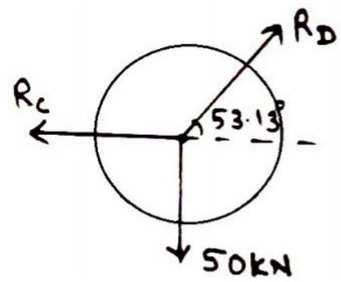

For Sphere 2, applying Conditions of Equilibrium,

$\sum F_x = 0$, $R_A \cos 40 - R_D \cos 53.13 = 0$

$\therefore R_A = 48.95$ kN

$\sum F_y = 0$, $R_B - 100 + 48.95 \sin 40 - 62.5 \sin 53.13 = 0$

$\therefore R_B = 118.5$ kN

Sol^n 2. (c)

For Ball 1	For Ball 2
$m_1 = m$	$m_2 = m$
$u_1 = ?$	$u_2 = 0$
$v_1 = 0$	$v_2 = ?$

Coefficient of Restitution,

$$e = \frac{v2-v1}{u1-u2} = \frac{v2-0}{u1-0} = \frac{v2}{u1}$$

Now, $\frac{1}{2}$ $[KE]_{Initial} = [KE]_{Final}$

$$\therefore \frac{1}{2}\left[\frac{1}{2}m_1u_1^2 + \frac{1}{2}m_2u_2^2\right] = \left[\frac{1}{2}m_1v_1^2 + \frac{1}{2}m_2v_2^2\right]$$

$$\therefore \frac{1}{2}\left[\frac{1}{2}mu_1^2\right] = \left[\frac{1}{2}mv_2^2\right]$$

$$\therefore \frac{v2}{u1} = 0.707 = e$$

3. (a) Determine the Centre of gravity of the shaded area. 8

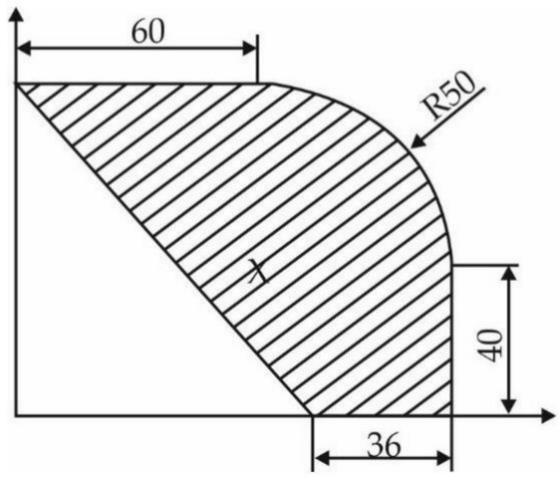

(b) The lines of action of three forces concurrent at origin 'O' pass respectively through points A(–1, 2, 4), B(3, 0, –3) and C(2, –2, 4) m. The magnitude of forces are 40 N, 10N and 30 N respectively. Determine the magnitude and direction of their resultant. 6

(c) A 30 N block is released from rest. It slides down a rough incline having coefficient of friction 0.25. Determine the maximum compression of the spring. 6

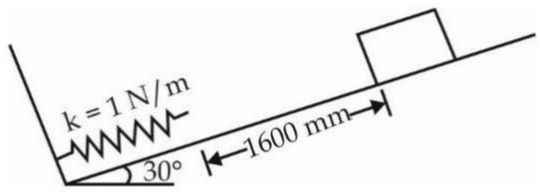

Sol^n 3. (a)

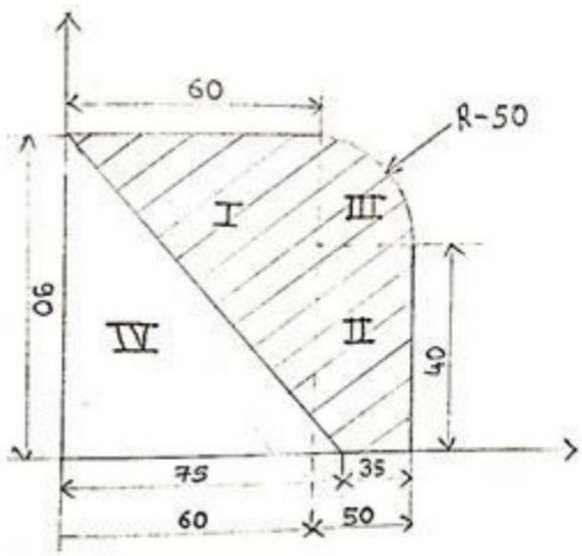

Component	*Area 'A$_i$' (mm^2)*	*Co-ordinates 'X$_{Gi}$'(mm)*	*Co-ordinates 'Y$_{Gi}$'(mm)*	*'A$_i$X$_{Gi}$' (mm^3)*	*'A$_i$Y$_{Gi}$' (mm^3)*
Triangle	$-\frac{1}{2} \times 90 \times 75$	$\frac{75}{3} = 25$	$\frac{90}{3} = 30$	-84.375×10^3	-101.25×10^3

	= 3375(-)				
Quarter Circle	$\frac{\Pi}{4}r^2$ $= \frac{\Pi}{4}[50^2]$ = 1963.5	60 + 4r/3Π = 60+4[50]/3Π = 81.22	40 + 4r/3Π = 40+4[50]/3Π = 61.22	159.475 x 10^3	120.205 x 10^3
Rectangle 1	60 x 90 = 5400	30	45	162 x 10^3	243 x 10^3
Rectangle 2	50 x 40 = 2000	60+25 = 85	20	170 x 10^3	40 x 10^3
$\sum$	$\sum A_i$ = 5.988 x 10^3			$\sum A_i X_{Gi}$ = 407.1 x 10^3	$\sum A_i X_{Gi}$ = 301.955 x 10^3

$$\bar{X} = \frac{\sum A_i X_{Gi}}{\sum A_i} = \frac{407.1 \text{ x } 10^3}{5.988 \text{ x } 10^3} = 67.98\text{mm}$$

$$\bar{Y} = \frac{\sum A_i Y_{Gi}}{\sum A_i} = \frac{301.955 \text{ x } 10^3}{5.988 \text{ x } 10^3} = 50.42\text{mm}$$

Centroid [X̄, Ȳ] = [67.98, 50.42] mm

Sol^n 3. (b)

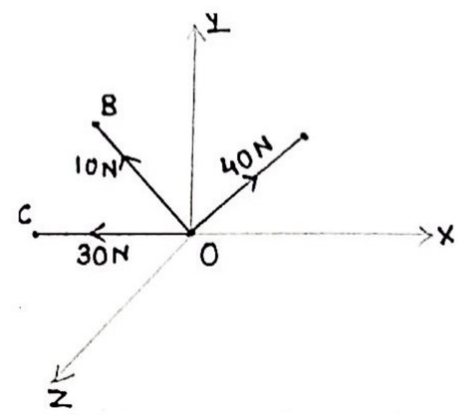

Co-ordinates: O(0,0,0); A(-1,2,4); B(3,0,-3); C(2,-2,4)

$$\overline{F_{OA}} = F_{OA} \text{ x } \overline{e_{OA}} = \frac{40 \text{ x } (-1i+2j+4k)}{\sqrt{1^2+2^2+4^2}} = -8.73i + 17.46j + 34.91k$$

$$\overline{F_{OB}} = F_{OB} \text{ x } \overline{e_{OB}} = \frac{10 \text{ x } (3i-3k)}{\sqrt{3^2+3^2}} = 7.07i - 7.07k$$

$$\overline{F_{OC}} = F_{OC} \text{ x } \overline{e_{OC}} = \frac{30 \text{ x } (2i-2j+4k)}{\sqrt{2^2+2^2+4^2}} = 12.25i - 12.25j + 24.49k$$

Resultant,

$$\bar{R} = \overline{F_{OA}} + \overline{F_{OB}} + \overline{F_{OC}} = 10.59i - 5.21j + 52.33k$$

$$\therefore R = \sqrt{10.59^2 + 5.21^2 + 52.33^2} = 53.64\text{N}$$

$\theta_X = \cos^{-1}\left(\frac{10.59}{53.64}\right) = 78.6°$;

$\theta_Y = \cos^{-1}\left(\frac{5.21}{53.64}\right) = 84.43°$;

$\theta_X = \cos^{-1}\left(\frac{52.33}{53.64}\right) = 12.69°$

Sol^n 3. (c)

From the geometry, h = (1.6 + x) sin 30

Let 'x' be the maximum compression of the spring.

The block travels from rest at position 1, when it starts sliding down the incline for 1.6m and then hits the spring which then starts getting compressed and stops the block at position 2.

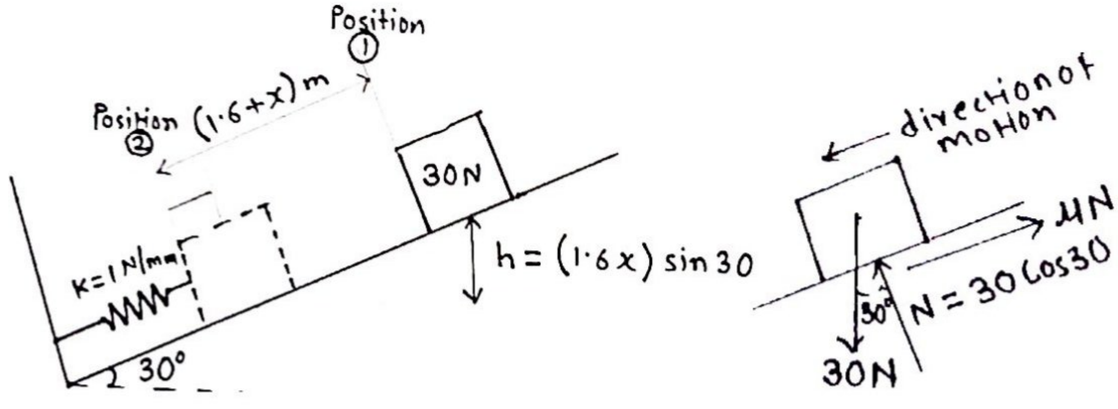

Applying Work-Energy Principle from 1-2

$T_1 = 0$, $T_2 = 0$, k = 1N/mm = 1000N/m

$U_{1\text{-}2}$

Work done by weight of block:

= mgh = 30(1.6 + x) sin 30 = 24 + 15x

Work done by friction force:

= -0.25 * 30cos30 (1.6 + x) = -10.39 – 6.495x

Work done by Spring force:

$= \frac{1}{2} k (x_1^2 - x_2^2) = \frac{1}{2} 1000 (0 - x^2) = -500\, x^2$

Now, $\sum U_{1\text{-}2} = T_2 - T_1$

$\therefore 24 + 15x - 10.39 - 6.495x - 500\, x^2 = 0$

$\therefore x = 0.1737$m

4. (a) Find the support reaction at B and the load P, for the beam shown in figure if the reaction at support A is zero. 8

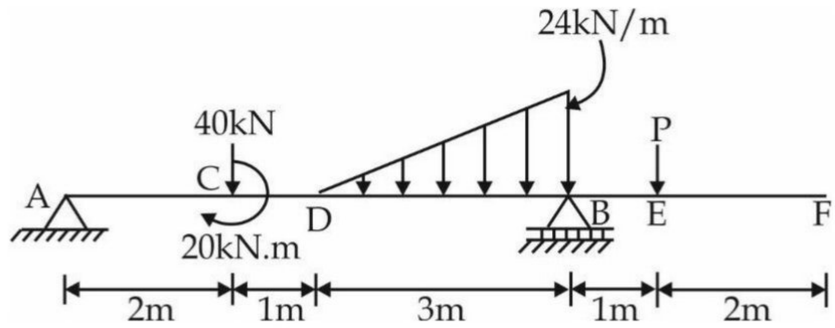

(b) **A gunman fires a bullet with a velocity of 100 m/s, 50° upwards from the top of a bill 300 m high in hit a bird. The bullet misses its target and finally lands on the ground. Calculate** **6**

(a) the maximum height reached by the bullet above the ground.

(b) total time of flight

(c) velocity with which the bullet hits the ground.

(c) **In the mechanism shown the angular velocity of link AB is 5 rad/sec anticlockwise. At the instant shown, determine the angular velocity of link BC and velocity of piston C.** **6**

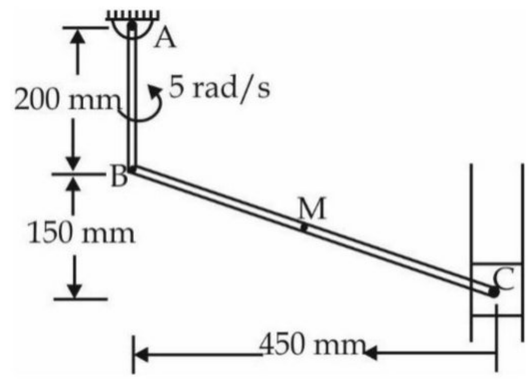

Sol^n 4. (a)

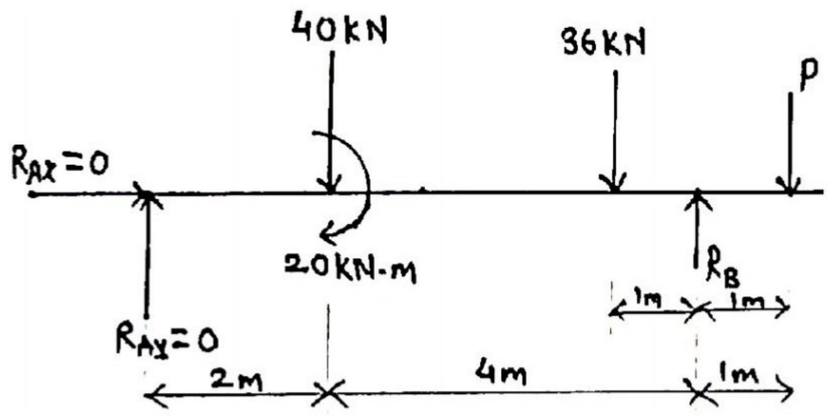

Given: $R_{Ax} = 0$; $R_{Ay} = 0$

Applying the conditions of Equilibrium,

$\sum M_B = 0$

$\therefore 40x4 + 36x1 - 20 - Px1 = 0$

$\therefore P = 176N$

$\sum F_y = 0$

$\therefore R_B - 40 - 36 - 176 = 0$

$\therefore R_B = 252N$

Sol^n 4. (b)

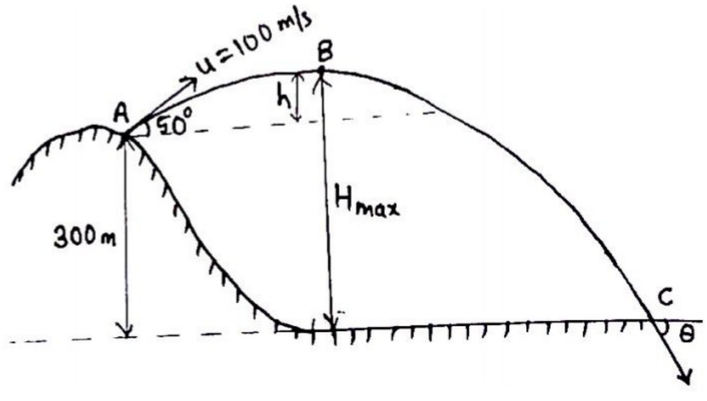

$u_x = 100\cos50 = 64.278$ m/s; $u_y = 100\sin50 = 76.604$ m/s

At maximum height, $v_y = 0$, $v^2 = u^2 + 2as$

For vertical motion,

$0 = u_y^2 - 2x9.81xh$

$\therefore h = 299.09m$, $\therefore H_{max} = 599.09m$

Now,

$S = ut^2 + \frac{1}{2}at^2$; $-300 = u_y t - \frac{1}{2}9.81t^2$

$\therefore t = 18.86$ sec

Now,

$v_x = u_x = 64.278m/s(\rightarrow)$; $v_y = u_y - 9.81t = 108.4m/s(\downarrow)$

$\therefore v = 126$ m/s, $\theta = 59.3°$

Sol^n 4. (c)

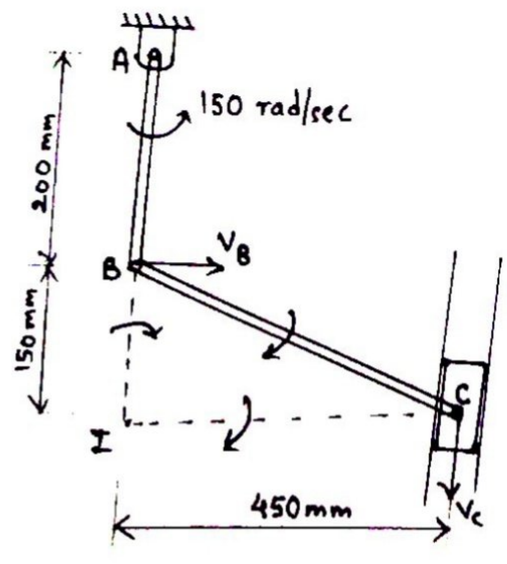

$v = r \times \omega$,

For rod AB, $v_B = 0.2 \times 5 = 1$ m/s (→)

For rod BC, $\omega_{BC} = \frac{v_B}{IB} = \frac{1}{0.15} = 6.67$ rad/sec

Also, $v_c = \omega_{BC} \times IC = 16.67 \times 0.45 = 3$m/s (↓)

5. (a) **Determine the forces in members BC, CE and DE by method of sections and all other members by method of joints. Give the result in a table.** **8**

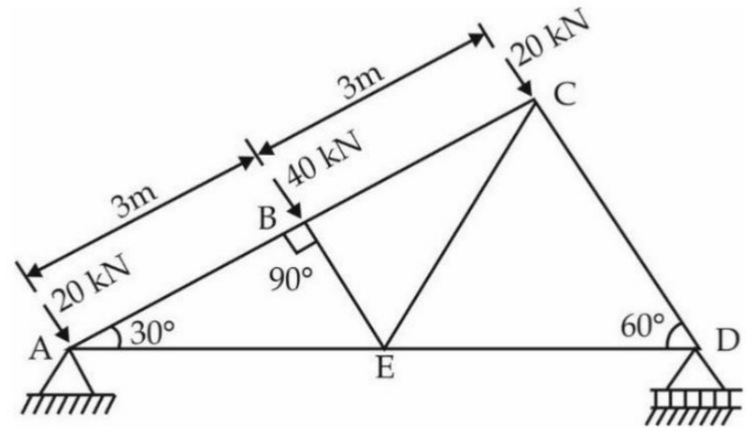

(b) **Due to slipping, points A and B on the rim of the disk have the velocities as shown in figure. Determine the velocities of the centre point C and point D on the rim at this instant. Take radius of disk 0.24m.** **6**

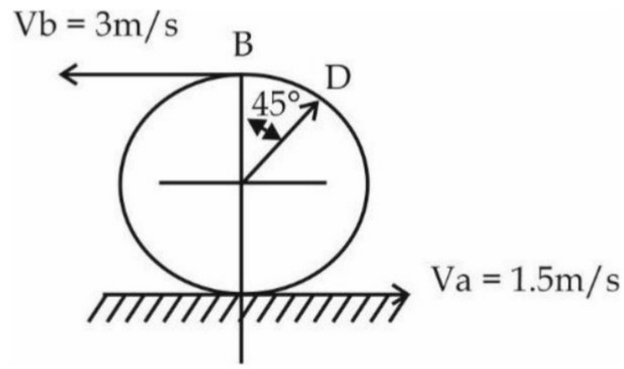

(c) **A particle moves in a straight line with a velocity-time diagram shown in figure If S = 25m at t = 0, draw displacement-time and acceleration time diagram for 0 to 24 seconds.** **6**

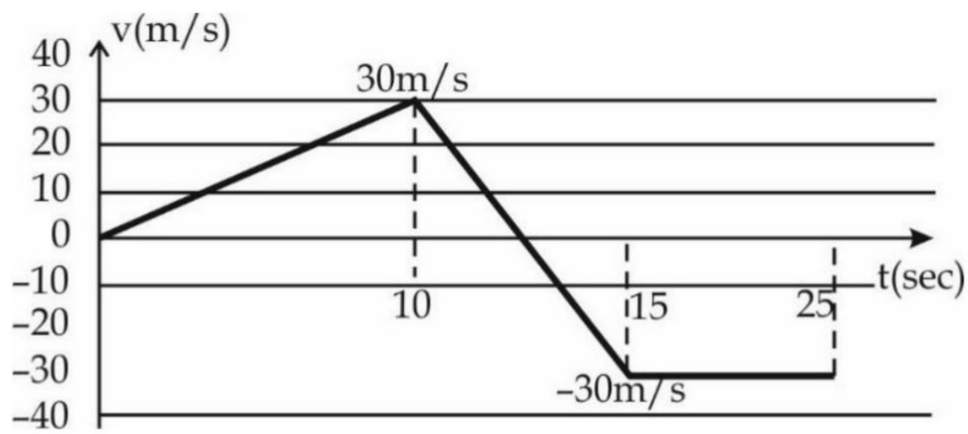

Sol^n 5. (a)

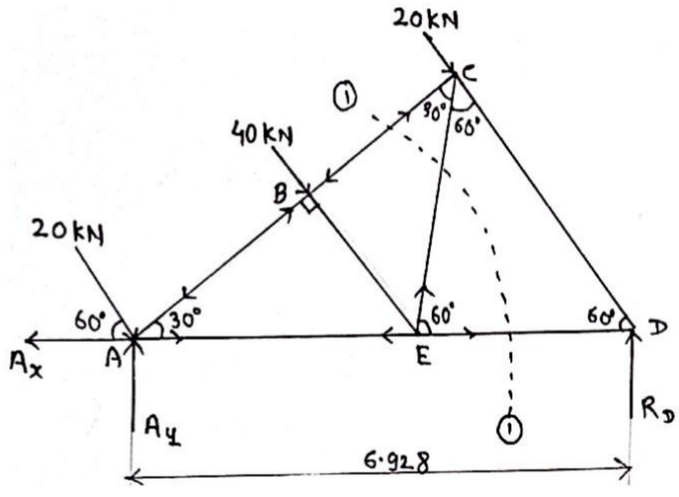

In Δ ACD, AD = $\frac{6}{\cos 30}$ = 6.928m & CD = 3.464m

Now, checking the stability of the truss using m = 2j – r

∴ 7 = 2x5 – 3 = 7; Hence the truss is stable and can be determined statically.

Considering the equilibrium of whole truss,

$\sum M_A = 0$; R_D x 6.928 – 40x3 – 20x6 = 0

∴ R_D = 34.64kN (↑)

$\sum F_x = 0$; A_x - 80cos60 = 0

∴ A_x = 40kN (←)

$\sum F_y = 0$; A_y – 80sin60 + 34.64 = 0

∴ A_y = 34.64kN (↑)

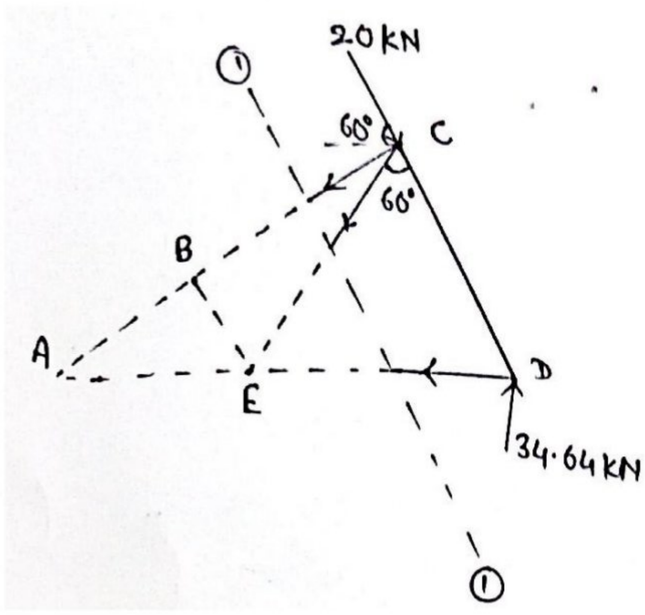

Method of Section

Applying the section of the truss as shown,

Considering equilibrium to the right side of section L-L

$\sum M_C = 0$; $34.64 \times 3.464/2 - F_{DE} \times 6\sin30 = 0$

$\therefore F_{DE} = 20kN$ (T)

$\sum M_A = 0$; $34.64 \times 6.928 - 20 \times 6 - F_{CE} \times 3 = 0$

$\therefore F_{CE} = 40kN$ (T)

$\sum F_y = 0$; $34.64 - 20\sin60 - 40\sin60 - F_{BC}\sin30 = 0$

$\therefore F_{BC} = -34.64kN = 34.64kN$ (C)

Method of Joints

For Joint 'A'

$\sum F_x = 0$; $F_{AE} - 40 + 20\cos60 - 34.64\cos30 = 0$

$\sum F_y = 0$; $34.64 - 20\sin60 + F_{AB}\sin30 = 0$

$\therefore F_{AB} = 34.64kN$ (C), $F_{AE} = 60kN$ (T)

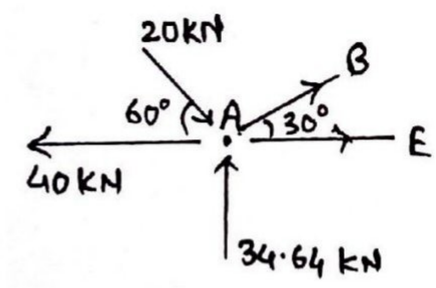

For Joint 'D'

$\sum F_x = 0$; $F_{DE} - 40\cos60 = 0$

$\sum F_y = 0$; $F_{CD}\sin60 - 34.64 = 0$

$\therefore F_{DE} = 20kN$ (T), $F_{CD} = 40kN$ (T)

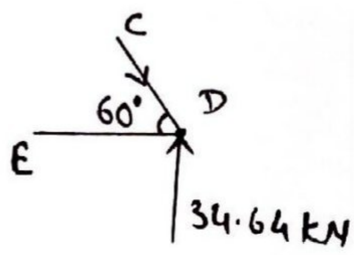

For Joint 'B'

$\sum F_x = 0$; $F_{BC} = 34.64kN$ (T)

$\sum F_y = 0$; $F_{BE} = 40kN$ (T)

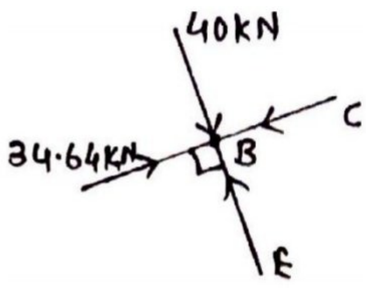

Sol^n 5. (b)

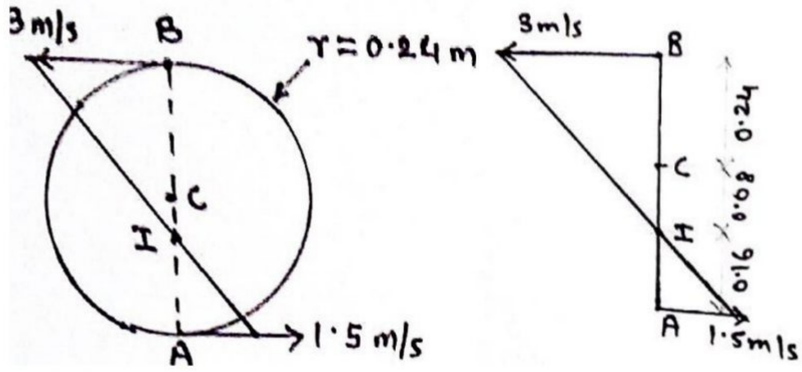

Let IA = y, IB = 0.48 – y

By Symmetry, $\frac{y}{1.5} = \frac{0.48-y}{3}$, y = 0.16m

IA = 0.16m, IB = 0.32m, IC = 0.08m

Now,

$v = r \times \omega$, $\therefore \omega = \frac{v_A}{IA} = \frac{v_B}{IB}$, $\omega = \frac{1.5}{0.16} = \frac{3}{0.32} = 9.375$ rad/sec

$\therefore v_C = 9.375 \times 0.08 = 0.75$ m/s

Using cosine rule in Δ ICD,

$DI^2 = CD^2 + CI^2 - 2CD \times CI \times \cos 135$; ∴ ID = 0.301m

$\therefore v_D = 9.375 \times 0.301 = 2.83$ m/s

Sol^n 5. (c)

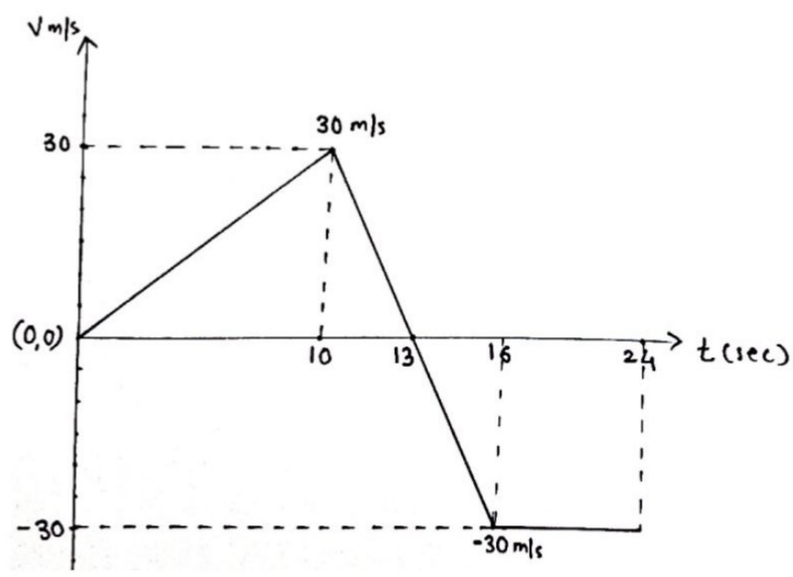

$s_0 = -25$m

Area below the v-t graph = change in displacement

$s_{10} - s_0 = \frac{1}{2} \times 30 \times 10 = 150$, $\therefore s_{10} = 125$m

v = 0 at t = 13sec

$s_{13} = 125 + \frac{1}{2}30x3 = 170m$

$s_{16} = 170 - 45 = 125m$

$s_{24} = 125 - 30x8 = 115m$

Now, $\frac{125}{x} = \frac{115}{(8-x)}$; $\therefore x = 4.167sec$

s = 0 at t = 16 + 4.167 = 20.167sec

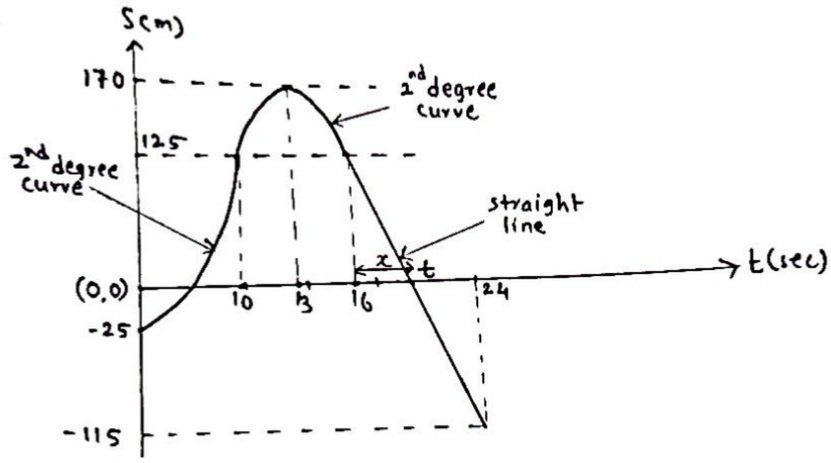

Slope of v-t graph = Acceleration

0 to 10 (sec), $a = \frac{30}{10} = 3\ m/s^2$

10 to 16 (sec), $a = \frac{-60}{6} = -10\ m/s^2$

16 to 24 (sec), a = slope = 0

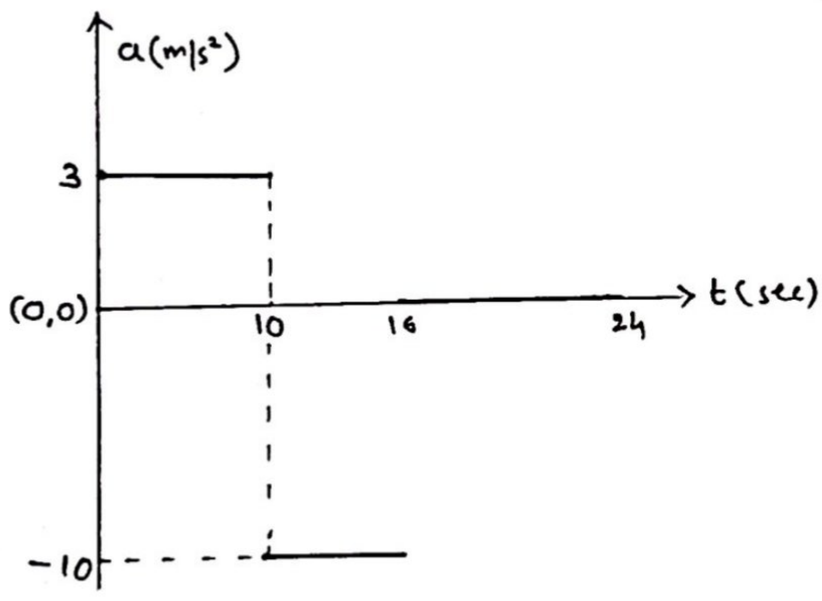

6. (a) **The mass of A is 23 kg and mass of B is 36 kg. The coefficient of friction are 0.4 between A and B, and 0.2 between ground and block B. Assume smooth drum. Determine the maximum mass of M at impending motion.** **8**

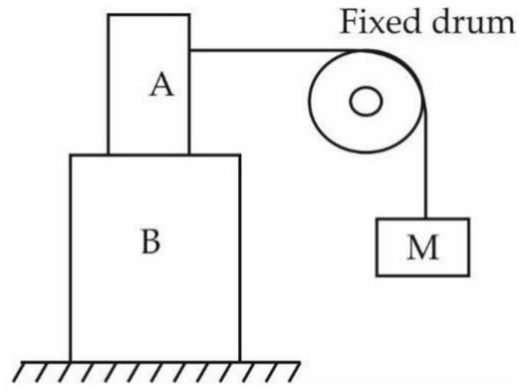

(b) **A force of 1200 N acts along PQ, P(4, 5, –2) and Q(–3, 1, 6) m. Calculate its moment about a point A(3, 2, 0) m.** **4**

(c) **A point moves along the path $y = x^2/3$ with a constant speed of 8 m/s. What are the x and y components of the velocities when x = 3. What is the acceleration of the point when x = 3.** **4**

(d) **A two-step pulley supports two weights A = 40 N and B = 60 N as shown. Find the downward acceleration of A if radius of bigger pulley is double that of the smaller one. Neglect friction and inertia of pulley.** **4**

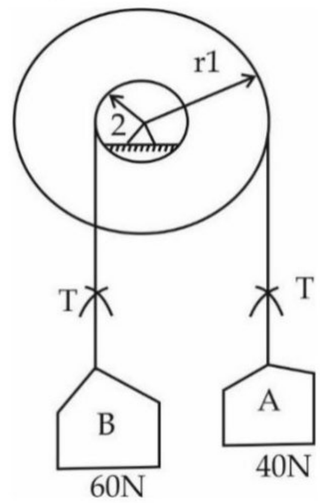

Sol^n 6. (a)

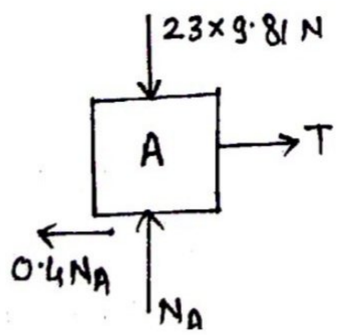

Two possibilities of motion can be considered for minimum T:

1) Block A moves to the right

$\sum F_y = 0$; $N_A - 23 \times 9.81$; $\therefore N_A = 225.63N$

$\sum F_x = 0$; $T - 0.4\ N_A = 0$, $\therefore T = 90.252N$

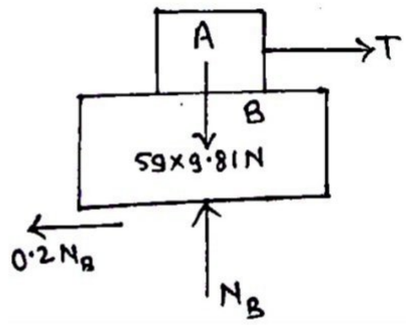

2) Both blocks move together to the right

$\sum F_y = 0$; $N_B - 59 \times 9.81$; $\therefore N_B = 578.8N$

$\sum F_x = 0$; $T - 0.2\, N_B = 0$, $\therefore T = 115.758N$

Hence the motion will start when T = 90.252N

$\therefore m = \frac{90.252}{9.81} = 9.2$ kg

Sol^n 6. (b)

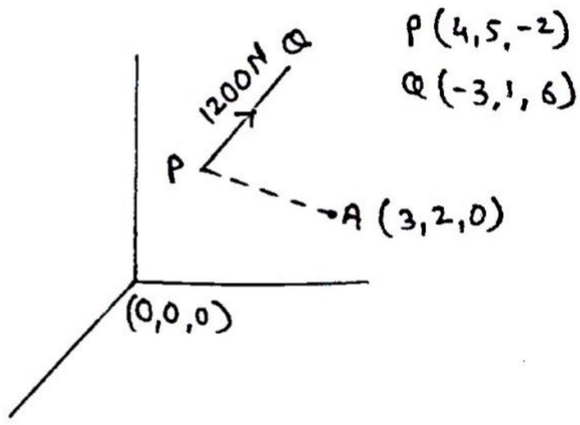

$$\overline{M_A} = \overline{AP} \times \overline{F_{PQ}} = \begin{vmatrix} i & j & k \\ (x_P - x_A) & (y_P - y_A) & (z_P - z_A) \\ F_x & F_y & F_z \end{vmatrix}$$

$$\overline{F_{PQ}} = 1200 \times \frac{\overline{PQ}}{PQ} = 1200 \times \frac{(-7i - 4j + 8k)}{\sqrt{7^2 + 4^2 + 8^2}}$$

$\overline{F_{PQ}} = -739.6i - 422.6j + 845.2k$

$$\overline{M_A} = \begin{vmatrix} i & j & k \\ (4-3) & (5-2) & (-2-0) \\ -739.6 & -422.6 & 845.2 \end{vmatrix}$$

$\overline{M_A} = 1690.4i - 634j + 1796.14k$

Sol^n 6. (c)

$y = \frac{x^2}{3}$, v = 8 m/s (constant), $\therefore a_t = 0$

$\frac{dy}{dx} = \frac{2x}{3}$, $\frac{d^2y}{dx^2} = \frac{2}{3}$

Now, $\rho = \frac{[1+(\frac{dy}{dx})^2]^{\frac{3}{2}}}{\frac{d^2y}{dx^2}}$

When x = 3, $\frac{dy}{dx} = 2$, $\frac{d^2y}{dx^2} = \frac{2}{3}$,

$\therefore \rho = \frac{[1+2^2]^{\frac{3}{2}}}{\frac{2}{3}} = 16.77\text{m}$

Now, $a_n = \frac{v^2}{\rho} = \frac{8^2}{16.77} = 3.82\ \text{m/s}^2$

$\therefore a = \sqrt{a_n{}^2 + a_t{}^2} = 3.82\ \text{m/s}^2$

Slope of the curve = $\tan\theta = \frac{dy}{dx} = 2$, $\therefore \theta = 63.43°$

$v_x = v\cos\theta = 3.578$ m/s

$v_y = v\sin\theta = 7.15$ m/s

Sol^n 6. (d)

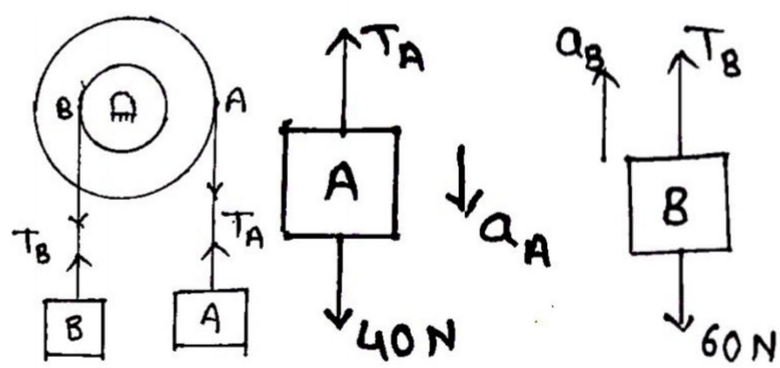

$r_B = r$, $r_A = 2r$

$\alpha_A = \alpha_B$, $\frac{a_A}{r_A} = \frac{a_B}{r_B}$, $\therefore a_A = 2a_B$

By D'Alembert's Principle, $\sum F - ma = 0$

For block A, $40 - T_A - \frac{40}{9.81} a_A = 0$, $\therefore T_A + 4.08\, a_A = 40$

For block B, $T_B - \frac{60}{9.81} a_B - 60 = 0$, $\therefore T_B - 6.11\, a_B = 60$

For pulley, $\sum M_{Center} = 0$, $T_A \times r_A = T_B \times r_B$, $\therefore T_A = \frac{T_B}{2}$

Solving all the equations, $a_A = 1.78\ \text{m/s}^2$ (↓); $T_A = 32.74$kN

****

Engineering Mechanics (Sem-I) May-2015

(Revised Course) CBGS

Time : 3 Hours **Total Marks : 80**

N.B. : (1) Question No.1 is compulsory.

(2) Attempt any three questions from remaining Question Nos. 2 to 6.

(3) Each full question carries 20 marks.

(4) Assume suitable date, if needed & state it clearly.

(5) Take $g = 9.81\ m/s^2$

1. (a) The guy cables AB & AC are attached to the top of the transmission tower as shown in figure. The tension in cable Ac is 8 kN. Determine the required tension T is cable AB such that the net effect of the two cable tensions is a download force at point A. Determine the magnitude R of the download force. 4

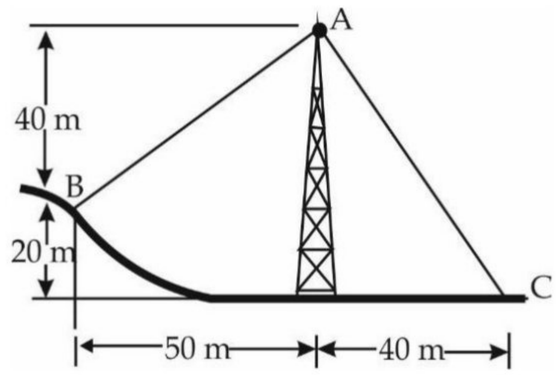

(b) Determine the tensions in cords AB & BC for equilibrium of 30 kg block. 4

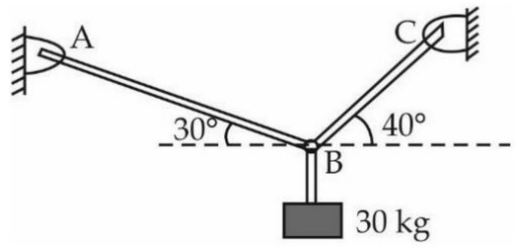

(c) A paint box weighing 9 kg is kept on a wooden block weighing 1.2 kg. (fig.). Determine the magnitude & direction of the friction force exerted by the roof surface on wooden block & normal force exerted by the roof on the wooden block. 4

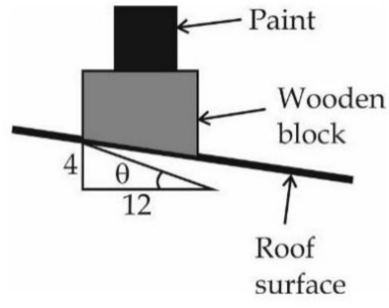

(d) Two cars start towards each other from stop X & stop Y at 1:36 PM, the first car reaches stop Y, travelling 8 km path, at 1:44 PM. Second car reaches stop X at 1:46 PM. If they move at uniform velocity, determine their time of meeting & their distance from stop X. 4

(e) The 550 N box (fig.) rests on a horizontal plane for which the coefficient of kinetic friction $\mu_k = 0.32$. If the box is subjected to a 400 N towing force as shown, find the velocity of the box in 4 seconds starting from the rest. 4

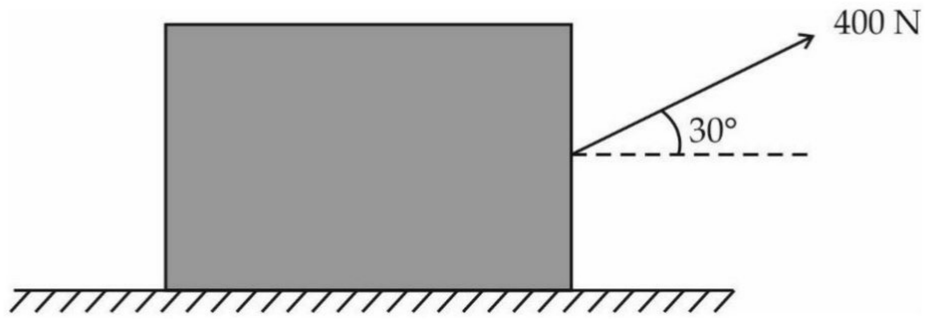

2. (a) Replace the force system (fig.) by a single force w.r. to pint C. 6

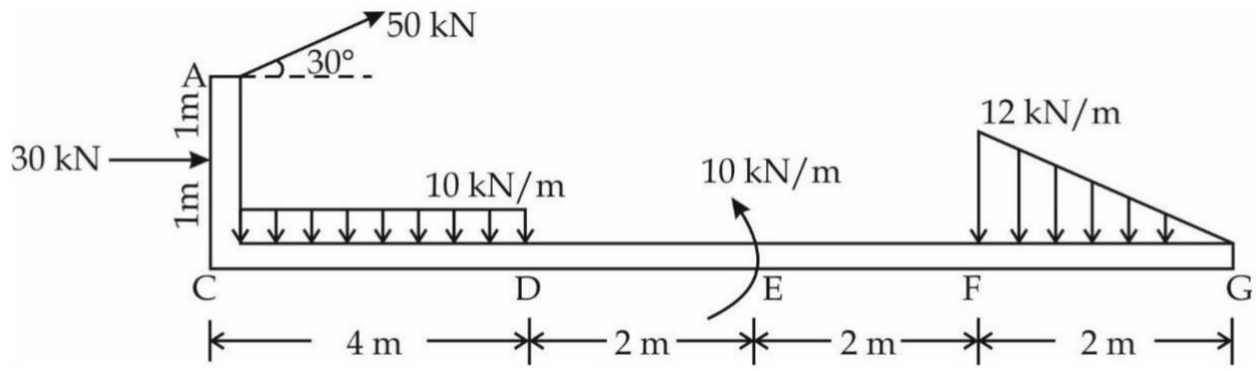

(b) A bar of 3 m. length & negligible weight tests in horizontal position on two smooth inclined planes (fig.). Determine the distance x at which the load Q = 150 N should be placed from point B to keep the bar horizontal. 8

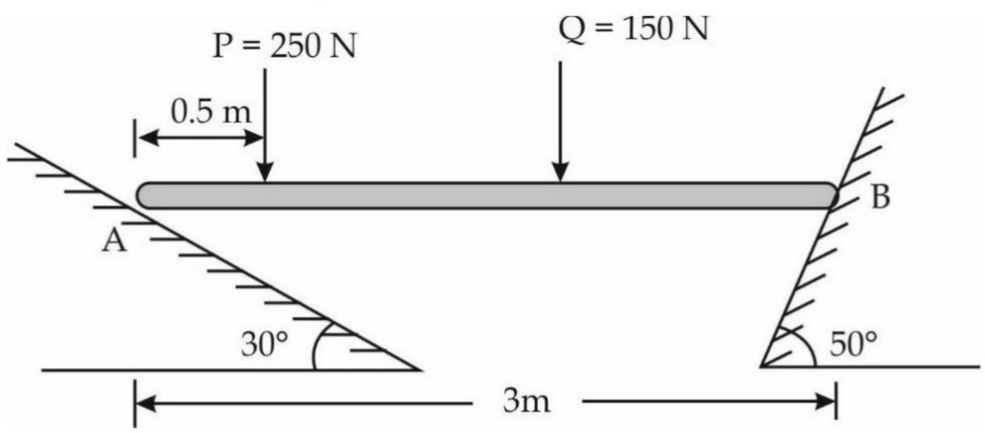

(c) Define the terms with neat sketches: Direct impact, oblique impact & line of impact. 6

3. (a) Locate the centroid of the shaded portion w. r. to ox & oy axes (fig.). 8

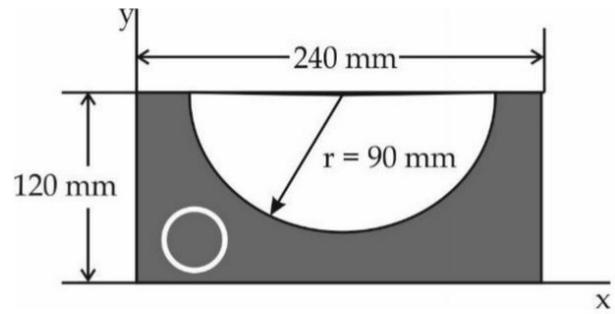

(b) A force F = 80i + 50j – 60k passes through a point A (6, 2, 6). Compute it moment about point B (8, 1, 4). 6

(c) The platform P (fig.) has negligible mass & is tied down so that the 0.4 m long cords keep a 1 m long spring compressed to 0.6 m. when nothing is on the platform. If 4 kg block is placed on the platform & released from rest after the platform is pushed down 0.1 m, find the maximum height 'h' the block rises in the air, measured from the ground. Use Work & Energy Principle. 6

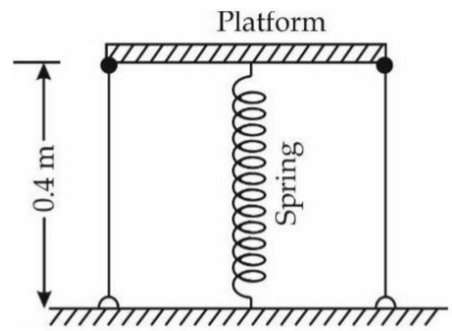

4. (a) Find the support reactions for the beam (fig.). 8

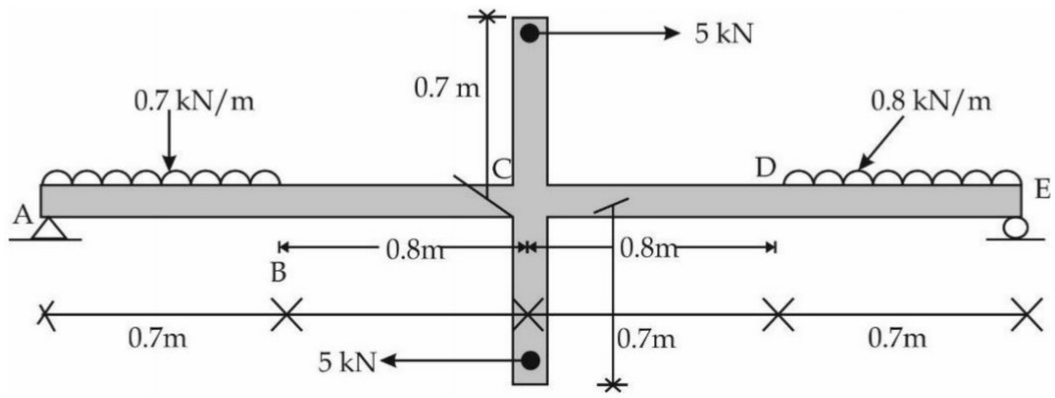

(b) Fig. shows the v-t diagram for the motion of a train as it moves from station A to station B. Draw a-t graph & find the average speed of the train & the distance between the stations. 6

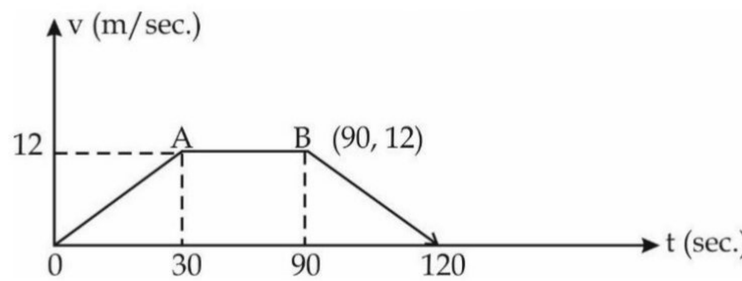

(c) A wheel is attached to the shaft of an electric motor of rated speed 1740 RPM. When the power is turned on, the unit attains the rated speed in 5 seconds & when the power is turned off, the unit comes to rest in 90 seconds. Assuming uniformly accelerated motion, determine the number of revolutions the unit turns: 6

(i) to attain the rated speed & (ii) to come to rest

5. (a) Using method of joints, find the forces in truss members (fig.). 8

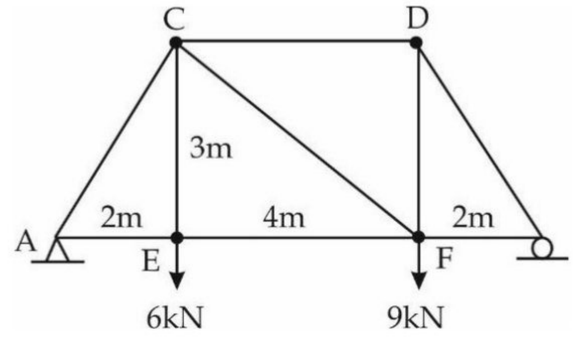

(b) The y coordinate of a particle is given by $y = 6t^3 - 5t$. If $a_x = 14t/sec^2$ & $v_x = 4$ m/sec at $t = 0$, determine the velocity & acceleration of particle when $t = 1$ second. 6

(c) For crank of concentric mechanism shown in fig. 12, determine the instantaneous centre of rotation of connecting rod at position shown. The crank OQ rotates clockwise at 310 RPM. Crank length = 10 cm, connecting rod length = 50 cm. Also find the velocity of P & angular velocity of rod at that instant. 6

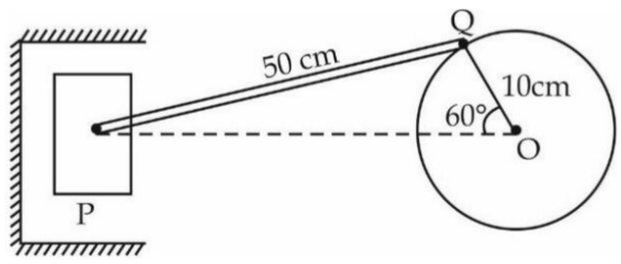

6. (a) Discuss the resultant of concurrent forces in space. 4

(b) A ladder of 4 m length weighing 200 N is placed as shown in fig. $\mu_B = 0.15$ & $\mu_A = 0.35$. Calculate the minimum horizontal force to be applied at A to prevent slipping. 8

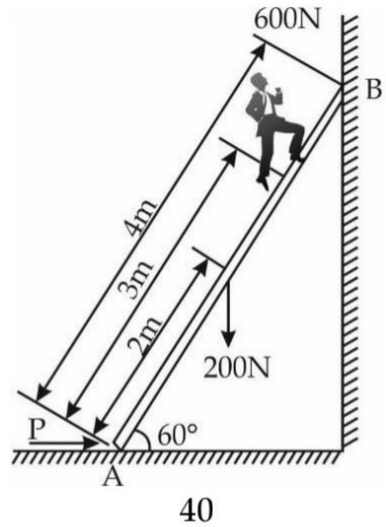

(c) With what minimum horizontal velocity (u) can a boy threw a rock at A & have it just clear the obstruction at B? Refer fig. 4

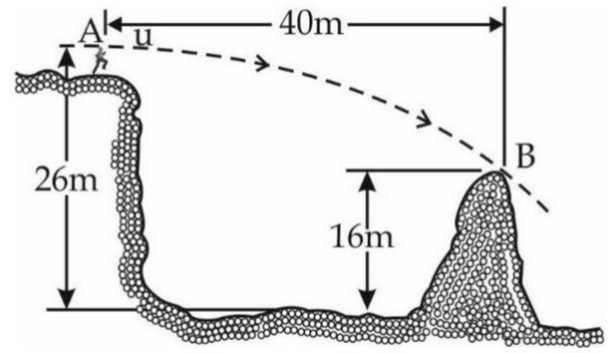

(d) Two masses of 60 N. & 30 N. are positioned over frictionless & massless pulley (fig.). If the 60 N. mass is released from rest, find the speed at which the 60 N. mass will hit the ground. 4

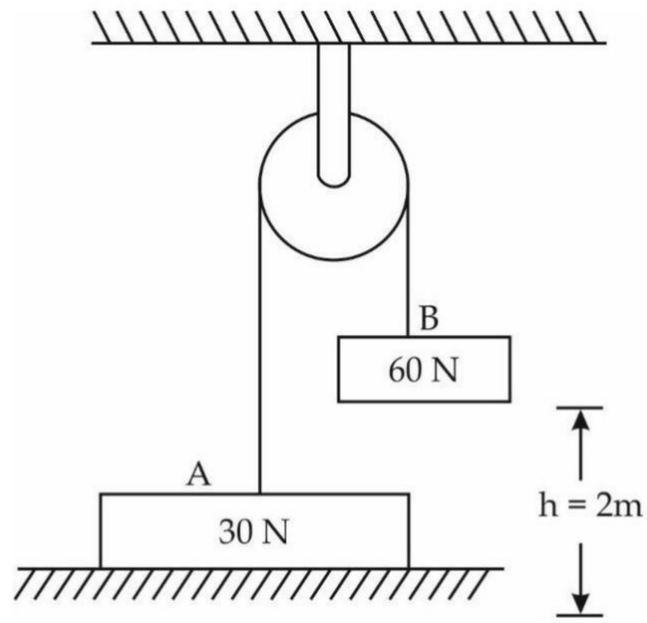

****

Engineering Mechanics (Sem-I) May-2015

Solution

1. (a) **The guy cables AB & AC are attached to the top of the transmission tower as shown in figure. The tension in cable Ac is 8 kN. Determine the required tension T is cable AB such that the net effect of the two cable tensions is a download force at point A. Determine the magnitude R of the download force.** **4**

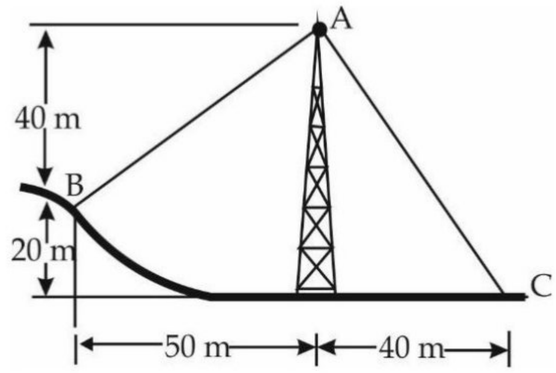

(b) **Determine the tensions in cords AB & BC for equilibrium of 30 kg block.** **4**

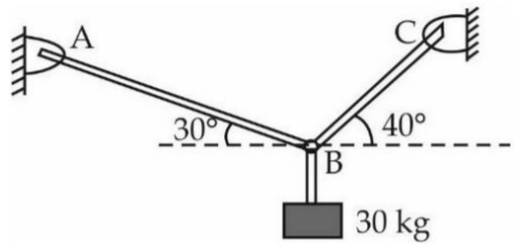

(c) **A paint box weighing 9 kg is kept on a wooden block weighing 1.2 kg. (fig.). Determine the magnitude & direction of the friction force exerted by the roof surface on wooden block & normal force exerted by the roof on the wooden block.** **4**

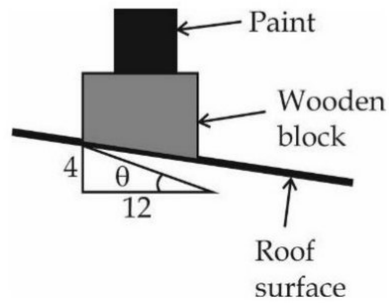

(d) **Two cars start towards each other from stop X & stop Y at 1:36 PM, the first car reaches stop Y, travelling 8 km path, at 1:44 PM. Second car reaches stop X at 1:46 PM. If they move at uniform velocity, determine their time of meeting & their distance from stop X.** **4**

(e) **The 550 N box (fig.) rests on a horizontal plane for which the coefficient of kinetic friction μ_k = 0.32. If the box is subjected to a 400 N towing force as shown, find the velocity of the box in 4 seconds starting from the rest.** **4**

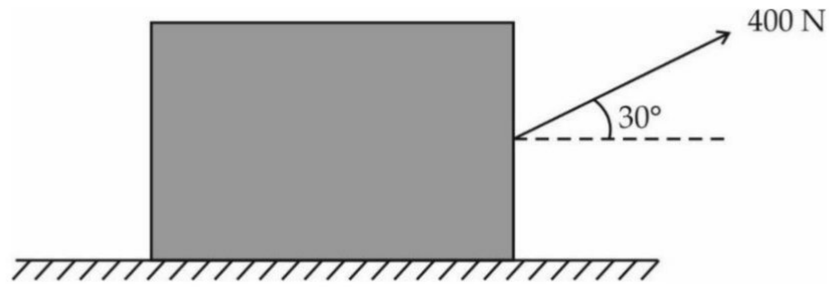

Sol.1 (a) Here the resultant is downward force at A.

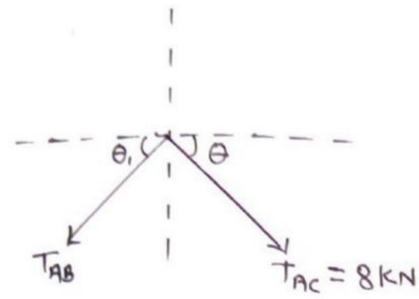

∴ $\Sigma F_x = 0$ $\tan\theta = 40/60$ $\therefore\theta = 33.69^o$ $\tan\theta_1 = 40/50$ $\therefore\theta_1 = 38.65$

$8\sin 33.69 - T_{AB}\cos 38.65 = 0$

$T_{AB} = 5.682$ KN

$R = 5.682\sin 38.569 + 8\cos 33.69$

R = 10.2058 KN ↓

Sol.1 (b) By Lamis theorem

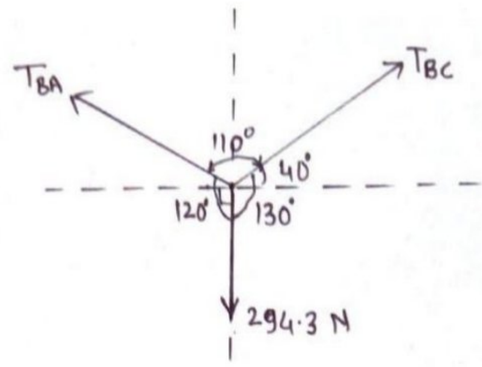

$$\frac{TAB}{\sin 130} = \frac{TBC}{\sin 120} = \frac{294.91}{271.228}$$

∴ **T_{AB} = 239.31 N**

∴ **T_{BC}= 271.228 N**

Sol.1 (c) $\tan\theta = 4/12 \therefore\theta = 18.43^o$

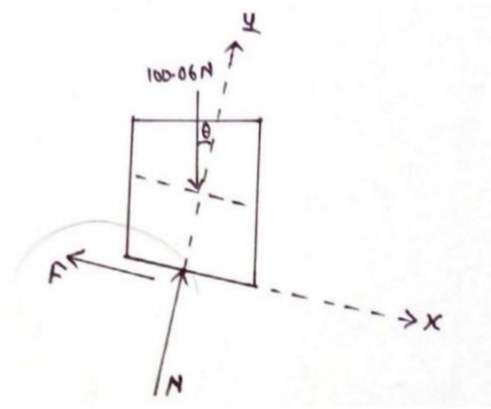

Total Force = 10.2 * 9.81 = 100.06 N

$\Sigma F_x = 0$

∴ -F + 100.06sin18.43 = 0

∴ **F= 31.63 N**

$\Sigma F_y = 0$

N – 100.06 cos 18.43 = 0

N = 94.92 N

Sol.1 (d) Velocity of first car $V_1 = \frac{8\ x\ 103}{(1{:}44-1{:}36)x60} = 16.67$ m/s

Velocity of first car $V_2 = \frac{8\ x\ 103}{(1{:}46-1{:}36)x60} = 13.33$ m/s

Let the cars meet after (t) sec of their start & at a distance 'x' from stop (X)

∴ X= 16.67 x t

(8000-x) = 13.33 x t

∴ **t = 266.67 s X = 4445.34 m**

Sol.1 (e)

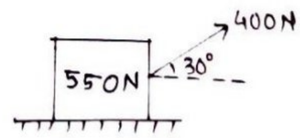

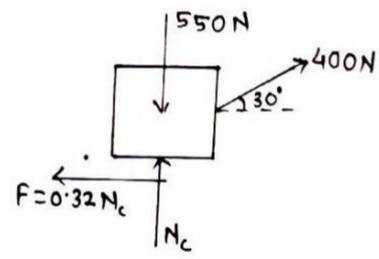

$\Sigma F_x = ma_X$ & $\Sigma F_x = ma_Y$

$\Sigma F_x = ma_X$

∴ $400\cos 30 - 0.32N_c = \frac{550}{9.81}a$

$\Sigma F_x = ma_Y$

$N_c - 550 + 400\sin 30 = 0$

∴ **N_c= 350 N & a=4.18 m/s²**

2. (a) Replace the force system (fig.) by a single force w.r. to pint C. **6**

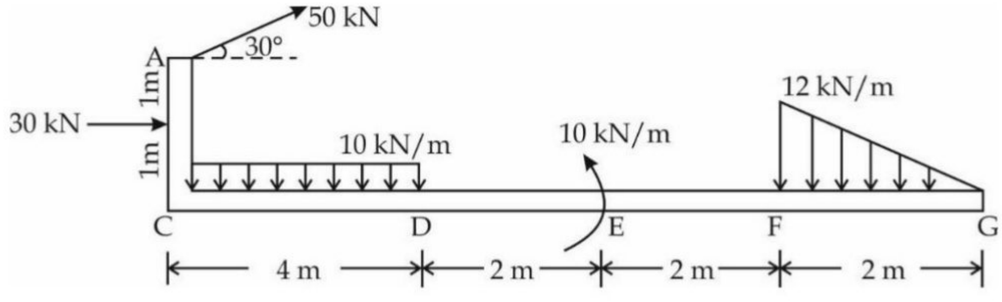

(b) **A bar of 3 m. length & negligible weight tests in horizontal position on two smooth inclined planes (fig.). Determine the distance x at which the load Q = 150 N should be placed from point B to keep the bar horizontal.** **8**

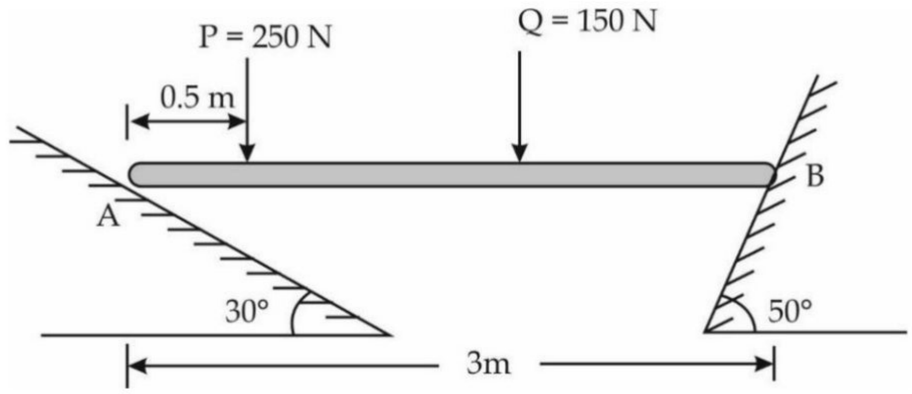

(c) **Define the terms with neat sketches: Direct impact, oblique impact & line of impact.** **6**

Sol.2 (a)

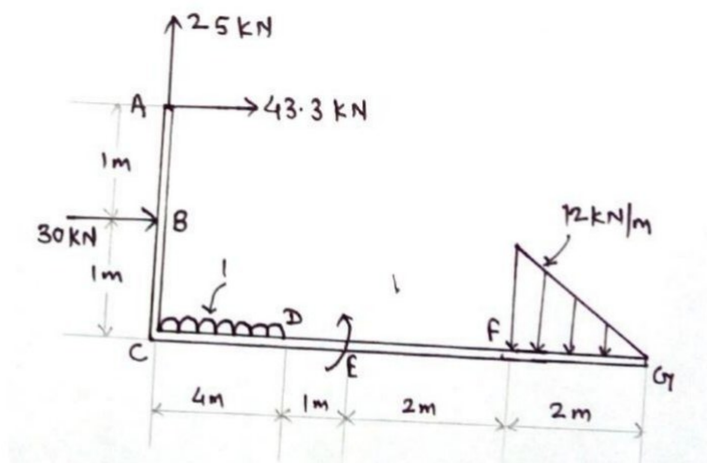

ΣF_x= 30+43.3=73.3KN→

ΣF_Y= 25 – 10 x 4 – 0.5 x 2 x 12 = -27KN↓

R = $\sqrt{(\Sigma F_x^2 + \Sigma F_Y^2)}$ = **78.11 KN**

ΣM_C= -43.3 x 2 – 30 x 1 -10 x 4 x 2 + 10 – 0.5 x 2x12(8+2/3) = -290.6KNm

ΣM_C= 290.6 KNm ↻

R x d = ΣM_C (By Varignon thm)

78.11xd = 290.6

d = 3.72m

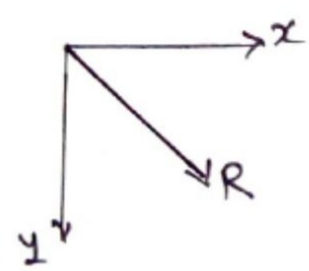

Sol.2 (b) At A

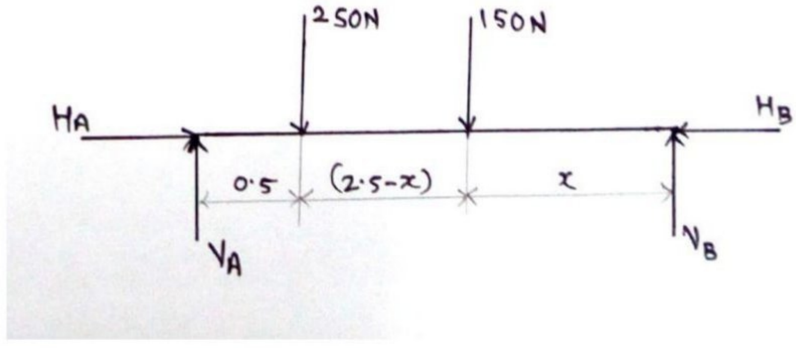

$H_A = 0.5\ R_A$ i.e. $R_A \sin 30$ & $V_A = 0.866\ R_A$ i.e $R_A \cos 30$

At B,

$H_B = R_B \sin 50 = 0.76\ R_B$

$V_B = R_B \cos 50 = 0.64 R_B$

$\Sigma F_x = 0 \therefore 0.5 R_A = 0.76\ R_B$

$\therefore$ $R_A = 0.76/0.5 R_B$ --- (i)

$\Sigma F_Y = 0$

$\therefore$ $0.86 R_A + 0.64 R_B - 250 - 150 = 0$ --(ii)

From (i) & (ii); $R_B = 205.42$ KN & $R_A = 312.23$ KN

Hence $V_A = 268.52$ KN $V_B = 131.468$ KN

For the bar to remain horizontal

$\Sigma M_B = 0$

$\therefore$ $-268.52 \times 3 + 250 \times 2.5 = 150 * x = 0$

$\therefore$ **x = 1.2037m** from B

Sol.2 (c) (i) Direct Impact
(ii) Qblique Impact
(iii) Line of impact

3. (a) Locate the centroid of the shaded portion w. r. to ox & oy axes (fig.). 8

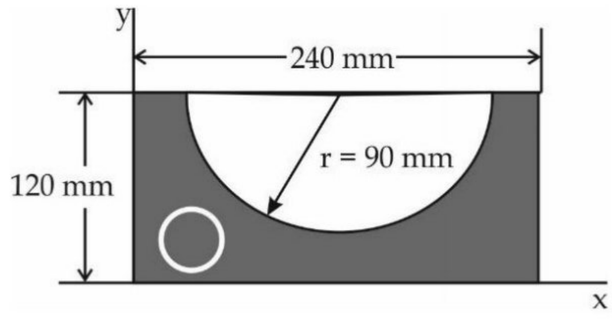

(b) A force F = 80i + 50j – 60k passes through a point A (6, 2, 6). Compute it moment about point B (8, 1, 4). 6

(c) The platform P (fig.) has negligible mass & is tied down so that the 0.4 m long cords keep a 1 m long spring compressed to 0.6 m. when nothing is on the platform. If 4 kg block is placed on the platform & released from rest after the platform is pushed down

0.1 m, find the maximum height 'h' the block rises in the air, measured from the ground. Use Work & Energy Principle. **6**

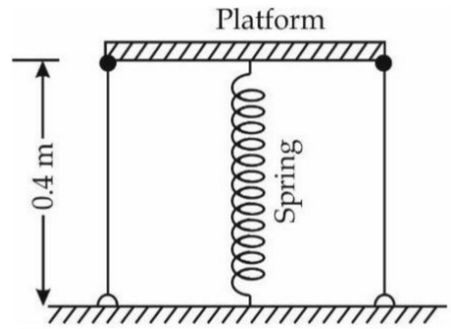

Sol.3 (a)

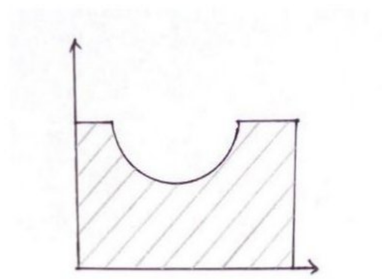

Given fig is symmetrical ∴ **x = 120mm**

<u>Rectangle</u>

A = 240x120=28800 mm²

y = 60mm

Ay = 1728000

<u>Semicircle</u>

A = л 90²/2 = -12723.45 mm²

y = 120-4x90/3л =81.80 mm

Ay = -1040778.21

ΣA = 16076.55 ΣAy = 687221.79

y = ΣAy/ ΣA = **42.74mm**

∴ **centroid = (120, 42.74)**

Sol.3 (b) F = 80i + 50j -60k , A(6,2,8) & B(8,1,4)

F_x= 80; F_Y = 50; F_Z= -60

$$M = \begin{vmatrix} i & j & k \\ (x_1 - x_2) & (y_1 - y_2) & (z_1 - z_2) \\ Fx & Fx & F_z \end{vmatrix} = \begin{vmatrix} i & j & k \\ (6-8) & (2-1) & (6-4) \\ 80 & 50 & -60 \end{vmatrix}$$

M_B = -160i + 40j -180k

$M_B = \sqrt{}\,(160^2 + 40^2 + 180)$ = **244.13 units**

Cos θ_x= -160/244.13θ_x = **130.95⁰**

Cos θ_Y = 40/244.13θ_Y = **80.57⁰**

Cos θ_Z = -180/244.13 θ_Z= **137.5⁰**

Sol.3 (c) As the block is released from rest & later reaches its max height, initial & final velocity = 0

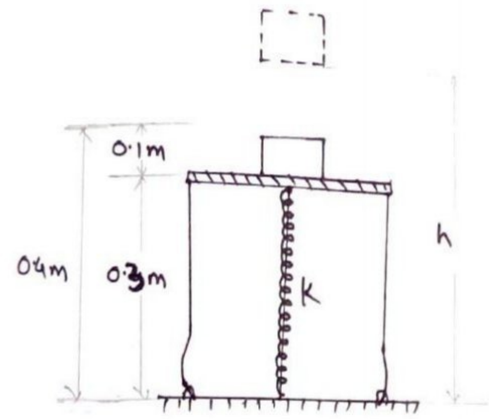

Original height of platform = 0.4m

Initial compression in the spring

$s_1 = (0.6 + 0.1) = 0.7m$

$s_2 = 0.6m$ (after the block leaves platform)

The bottom of the block rises from height of (0.4-0.1) = 0.3m to the final height 'h'

By principle of work and energy

$T_1 + \Sigma U_{1-2} = T_2$

$0.5m\ V_1^2 + [-(0.5\ ks_2^2 - 0.5ks_1^2) - Wy] = 0.5mv_2^2$

$s_1 = 0.7m \quad s_2 = 0.6m$

$\therefore \quad 0 + [-(0.5k \times 0.6^2 - 0.5 \times k \times 0.7^2) - (39.24\ (h-0.3)] = 0$

$h = \frac{(11.772+0.065k)}{39.24}$

4. (a) Find the support reactions for the beam (fig.). 8

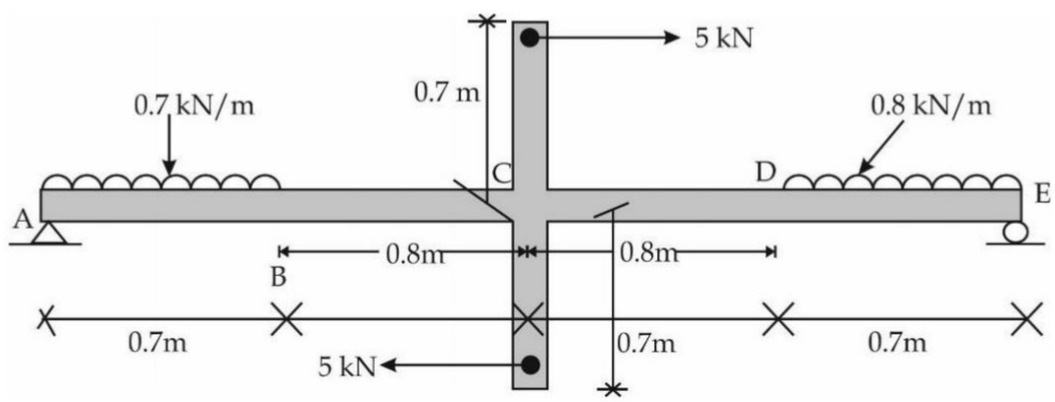

(b) Fig. shows the v-t diagram for the motion of a train as it moves from station A to station B. Draw a-t graph & find the average speed of the train & the distance between the stations. 6

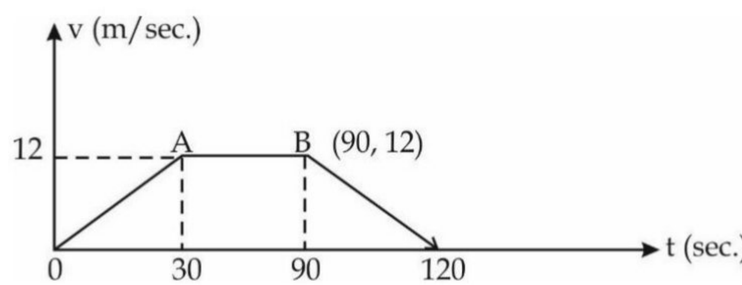

(c) **A wheel is attached to the shaft of an electric motor of rated speed 1740 RPM. When the power is turned on, the unit attains the rated speed in 5 seconds & when the power is turned off, the unit comes to rest in 90 seconds. Assuming uniformly accelerated motion, determine the number of revolutions the unit turns:** **6**

(i) to attain the rated speed & (ii) to come to rest

Sol.4 (a) Magnitude of couple (5 x 1.4) = 7 KNm

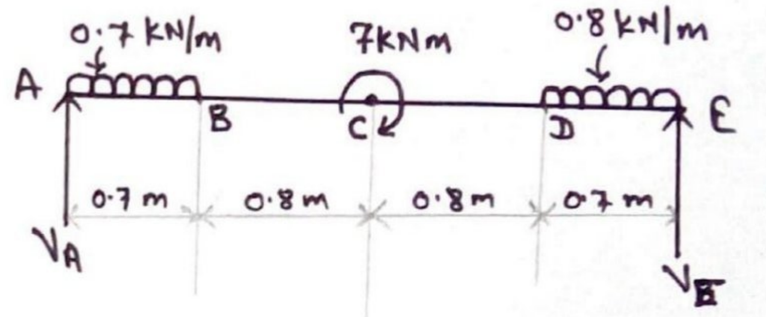

$\Sigma M_A = 0$

∴ $(V_E \times 3) - (0.8 \times 0.7)(0.7 + 0.8 + 0.8 + 0.35) - 7 - (0.7 \times 0.7)(0.35) = 0$

$\mathbf{V_E = 2.88\ KN} \uparrow$

$\Sigma F_Y = 0$

∴ $V_A + 2.88 - (0.7 \times 0.7) - (0.8 \times 0.7) = 0$

∴ $\mathbf{V_A = -1.83\ KN}$

Sol.4 (b)

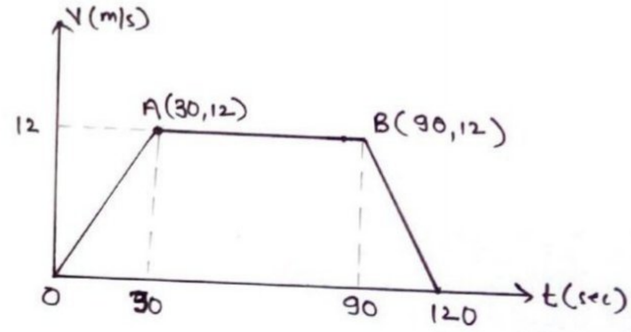

<u>for 0 to 30s (OA)</u>

$V = (12/30)\ t = (2/5)\ t$ m/s

$a = 2/5 = 0.4$ m/s^2

For 30 to 90s (AB)

V = 12m/s & a=0 (velocity is constant)

For 90 to 120s (BC)

$V-12 = (12-0)/(90-120)\ (t-90)$ ∴ $V = 2/5\ t + 48$

∴ $a = -2/5$ m/s^2

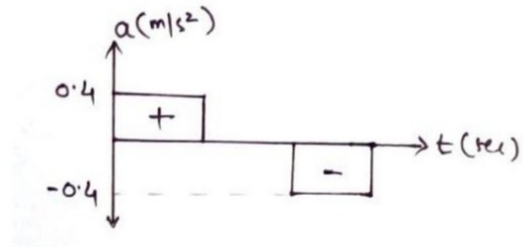

Total distance:

Distance covered from 0 to 30s

$X = \int_2^5 \frac{2}{5t} dt = [2/5\ t^2/2]_0^{30} = 180m$

From 30 to 90s:

X = vel x time = (12 x 60) = 720 mm

From 90 to 120 sec

$X = \int_{90}^{120} (-\frac{2}{5}t + 48)dt = [-t^2/5 + 48t]_{90}^{120} = 180m$

Total distance covered = (180+720+180)=1080m

Avg speed = 1080/120 = 9m/s

Sol.4 (c) (i) Rated Speed = angular velocity ω = 1740rpm

$\therefore$ $\omega = 1740/60 = 29$ r/s

Initial angular velocity $\omega_o = 0$

Time to attain the rated speed = t= 5sec

$\omega = \omega_o + \alpha t \ \therefore 29 = 0 + \alpha x5 \ \therefore \alpha = 5.8$ r/s^2

No of revolution $\Theta = \omega_o t + 0.5\ \alpha t^2 = 0 + 0.5x5.8\ x5^2$

$\therefore$ **θ = N = 72.5 rev**

(ii) When the power is switched off:

Initial angular velocity when power is off, ω_o = 29rev/s

$\omega = 0, \quad \omega = \omega_o + \alpha t \ \therefore 0 = 29 + \alpha x90$

$\therefore$ α = -0.32 rev/s^2 (angular retardation)

$N = \theta = \omega_o + 0.5\ \alpha t^2 = 29 \times 90 + 0.5\ (-0.32)(90)^2$

N = θ = 1314 rev (rev to come to rest)

5. (a) Using method of joints, find the forces in truss members (fig.). **8**

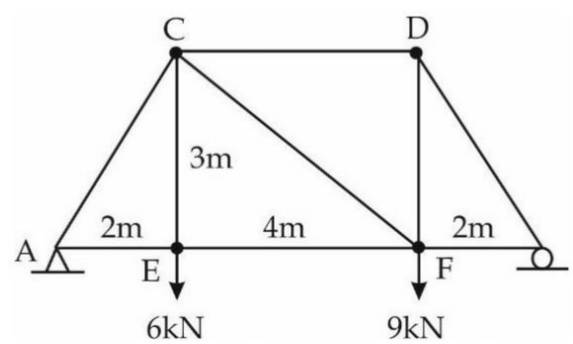

(b) The y coordinate of a particle is given by y = 6t^3 – 5t. If a_x = 14t/sec^2 & v_x = 4 m/sec at t = 0, determine the velocity & acceleration of particle when t = 1 second. **6**

(c) For crank of concentric mechanism shown in fig. 12, determine the instantaneous centre of rotation of connecting rod at position shown. The crank OQ rotates clockwise at 310 RPM. Crank length = 10 cm, connecting rod length = 50 cm. Also find the velocity of P & angular velocity of rod at that instant. **6**

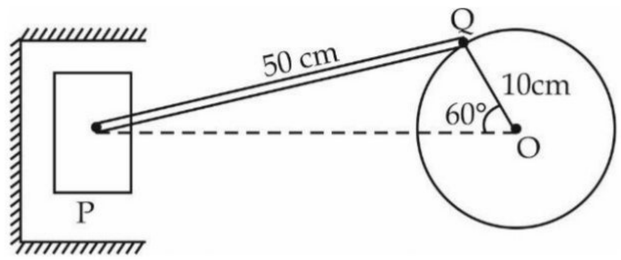

Sol.5 (a)

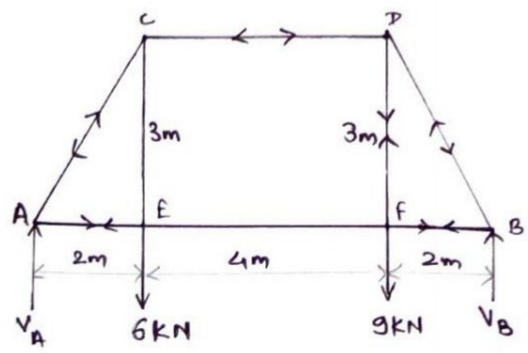

$\Sigma M_A = 0$

$V_B \times 8 - 6 \times 2 - 9 \times 6 = 0$

V_B = 8.25 KN

$\Sigma F_Y = 0$

∴ $V_A + 8.25 - 6 - 9 = 0$

∴ **V_A = 6.75 KN**

Methods of Joints:

<u>Joint-A</u> $\tan\Theta = 3/2$ ∴ $\Theta = 56.31$

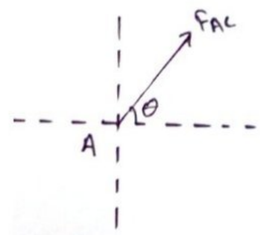

$\Sigma F_X = 0$ ∴ $F_{AE} + F_{AC} \cos 56.31 = 0$

$\Sigma F_Y = 0$ ∴ $6.75 + F_{AC} \cos 56.31 = 0$

F_{AC} = -8.11 KN = 8.11 KN (C) & F_{AE}= 4.498KN(T)

Similarly

<u>Joint E</u> F_{EC} = 6KN (T) F_{EF} =4.49 KN (T)

<u>Joint B</u> F_{BF}= 5.49 KN (T) F_{BD} = -9.91KN (T) ∴ F_{BD} = 9.91KN (C)

<u>Joint D</u> F_{DF} = 8.24 KN (T) F_{DC} = 5.49 (C)

<u>Joint F</u> F_{FB} = 5.49 KN (T) F_{FD} = 8.24 KN (T) F_{FC} = 1.26 KN(T)

Sol.5 (b) $y = 6t^3 - 5t$; $a_x = 14t$ m/s²; $v_x = 4$m/s at t=0

$y = 6t^3 - 5t)$ ∴ $dy/dt = \mathbf{v_Y = 18t^2 - 5}$ & $dv_Y/dt = \mathbf{a_y = 36t}$

When t =1 s v_y = 13m/s & a_y=36m/s²

We have $a_x = 14t$ at t=0 ∴ $a_x = d(v_x)dt = 14t$

$dv_x = 14t\, dt$ ∴ $\int dv_x = \int 14t\, dt$

$\therefore \quad v_x = 14t^2/2 + C_1$

At t=0 $v_x = 4$m/s, $\quad \therefore 4 = 0 + C_1 \quad \therefore \quad C_1 = 4$

$\therefore \quad$ **$v_x = 7t^2 + 4$** Now when t=1 sec **v_X=11m/s**

Sol.5 (c)

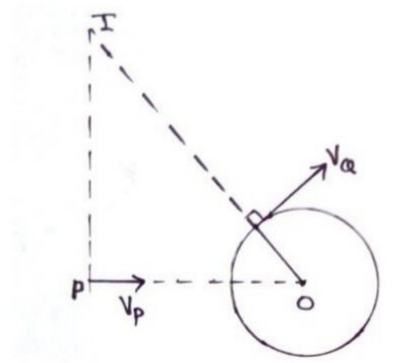

$\omega_{OQ} = 310$rpm $= 5.16$ rev/s

$\therefore \quad \omega_{OQ} = 10.32\,\pi$ r/s

$V_Q = \omega_{OQ} \times r_{OQ} = 10 \times 10^{-2} \times 10.32\,\pi$

$V_Q = 1.032\,\pi = 3.24$ m/s

$\omega_{PQ} = V_Q/IQ = 3.24/(57.5 \times 10^{-2})$ = **5.63 r/s**

$V_P = \omega_{PQ} \times IP \quad \therefore \quad V_P = 5.63 \times 10^{-2}$ = **1.9142 m/s**

6. (a) Discuss the resultant of concurrent forces in space. 4

(b) A ladder of 4 m length weighing 200 N is placed as shown in fig. $\mu_B = 0.15$ & $\mu_A = 0.35$. Calculate the minimum horizontal force to be applied at A to prevent slipping. 8

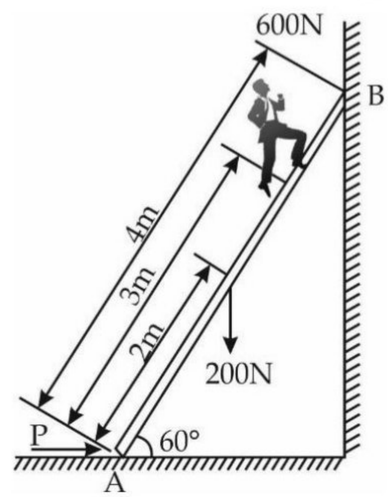

(c) With what minimum horizontal velocity (u) can a boy threw a rock at A & have it just clear the obstruction at B? Refer fig. 4

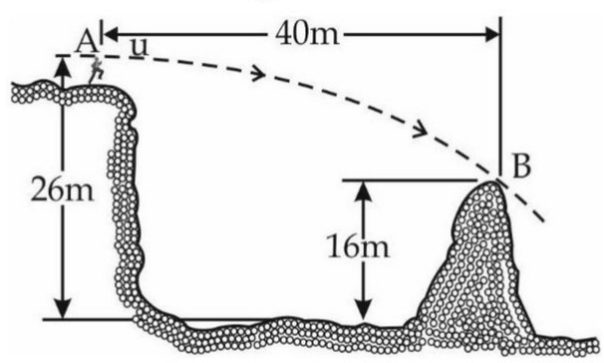

(d) Two masses of 60 N. & 30 N. are positioned over frictionless & massless pulley (fig.). If the 60 N. mass is released from rest, find the speed at which the 60 N. mass will hit the ground. **4**

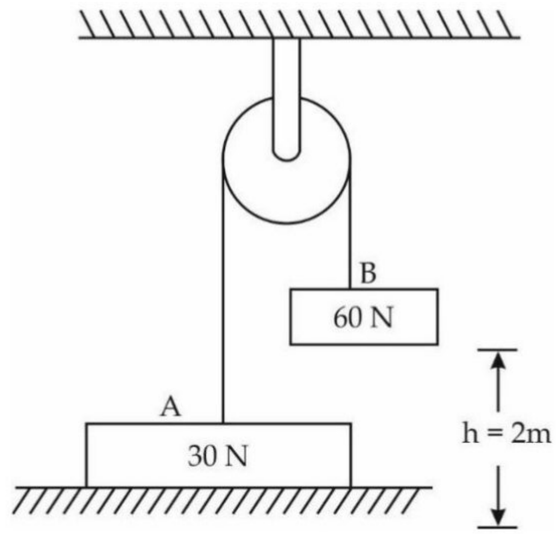

Sol.6 (a) Resultant of concurrent forces in space:

When a system of concurrent forces in space is given the resultant will be obtained by summing their rectangular components. To determine resultant, resolve each force into rectangular components and express as

$$R_X\bar{i}+R_Y\bar{j}+R_Z\bar{k}=\sum(F_X i+F_Y j+F_Z k)=\left(\sum F_X\right)\bar{i}+\left(\sum F_Y\right)\bar{j}+\left(\sum F_Z\right)\bar{k}$$

$$\therefore R_X=\sum F_X,\ R_Y=\sum F_Y,\ R_Z=\sum F_Z,\quad R=\sqrt{R_X^2+R_Y^2+R_Z^2},\ \cos\theta_X=\frac{R_X}{R},\quad \cos\theta_Y=\frac{R_Y}{R},$$

$$\cos\theta_Z=\frac{R_Z}{R}$$

Sol.6 (b)

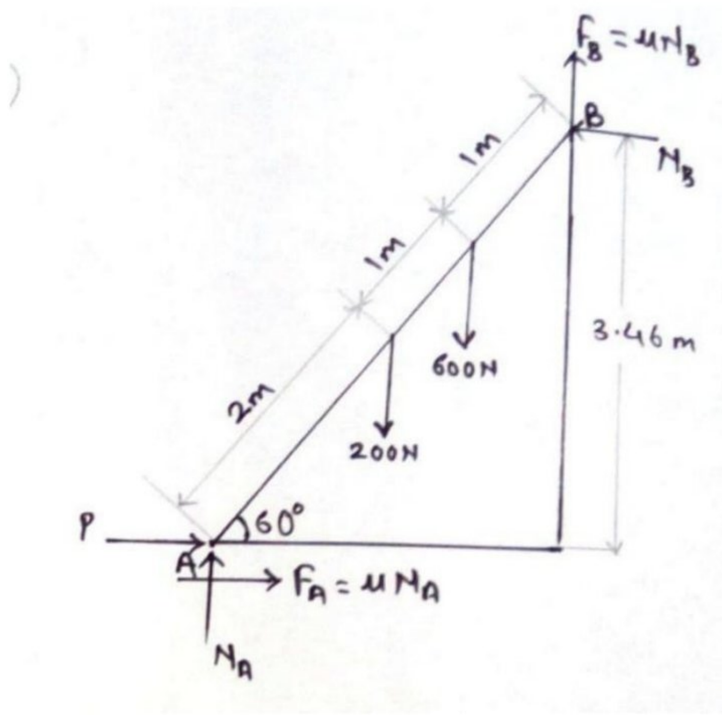

$\Sigma M_A = 0$

∴ $0.25N_B \times 2 + NB \times 3.46 - 600 \times 3\cos60 - 200 \times 2\cos60 = 0$

∴ **N_B = 277.77 KN & F_B = 69.44 KN**

$\Sigma F_Y = 0$

∴ $N_A + F_B - 200 - 600 = 0$ ∴ $N_A = 730.56$ KN

∴ $F_A = 0.35 \times 730.56$ ∴ $F_A = 255.696$ KN

$\Sigma F_X = 0$ $P + F_A - N_B = 0$ ∴ $P + 255.696 - 277.77 = 0$

∴ **P = 22.074KN**

Sol.6 (c)

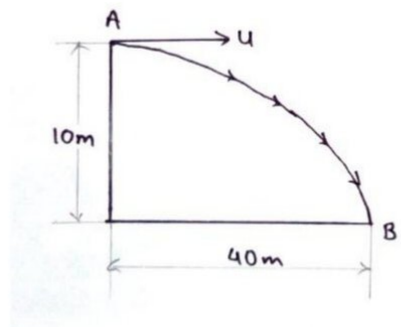

In the vertical motion

$S = ut + \frac{1}{2} at^2$

∴ $-10 = 0 - \frac{1}{2} \times 9.81\ t^2$

t = 1.427 s

for the horizontal motion:

Total horizontal distance = v x t

∴ 40 = [v x 1.427] ∴ **v = 28.03 m/s**

Sol.6 (d) for block –A, T-30 = 30/9.81 a --(i)

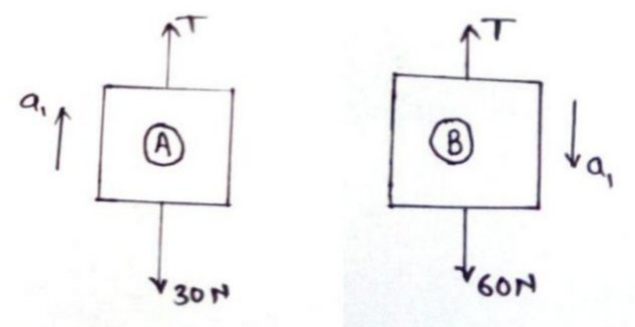

For block-B, T-60 = -60/9.81 a ---(ii)

From (i) & (ii) **a = 3.27 m/s²**

Now, $v^2 = u^2 + 2as$ ∴ $v^2 = 0 + 2 \times 3.27 \times 2$

V = 3.61 m/s

Block 60N will hit the ground with a speed of 3.61 m/s

****

Engineering Mechanics (Sem-I) May-2016

(Revised Course) CBGS

Time : 3 Hours **Total Marks : 80**

N.B. : (1) Question No.1 is compulsory.

(2) Attempt any three questions from remaining Question Nos. 2 to 6.

(3) Assume suitable data if necessary and mention the same clearly.

(4) Take $g = 9.81\ m/s^2$

1. (a) Determine the resultant of the forces acting as given in figure below. Find the angle which the resultant makes with the positive x-axis. 4

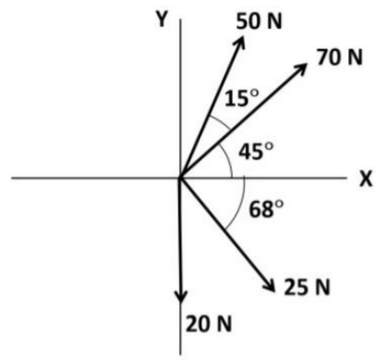

(b) Two spheres A and B are kept in a horizontal channel. Determine the reactions coming from all the contact surfaces. Consider the radius of A and B are 40 mm and 30 mm respectively. Take $W_A = 500$ N and $W_B = 200$ N. 4

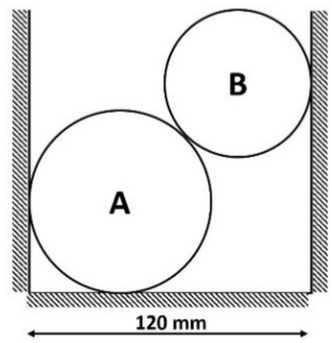

(c) Define Angle of Friction and Angle of Repose. 4

(d) Car A starts from rest & accelerates uniformly on a straight road. Another car B starts from the same place 5 seconds later with initial velocity zero & it accelerate uniformly at 5 m/sec². If both the cars overtake at 500 m from the starting place, find the acceleration of car A. 4

(e) Find the angle the force P makes with horizontal such that the block of mass 4 kg has an acceleration of 10 m/sec², when it is subjected to a force of 35 N. $\mu s = 0.7$, $\mu k = 0.6$. 4

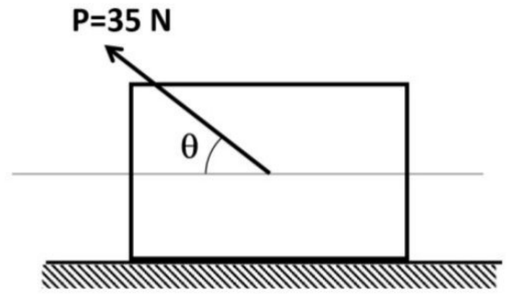

2. (a) Replace the force system by a single force w.r. to point C. 6

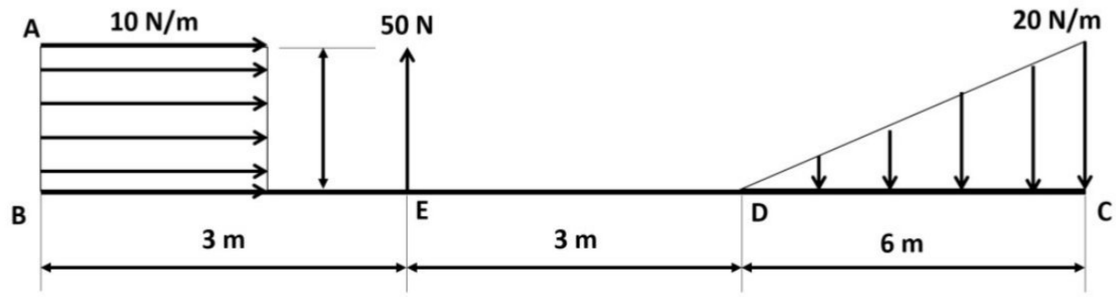

(b) A uniform beam AB hinged at A is kept horizontal by supporting & setting a 100 N weight by using a string tied at B & passing over a smooth pulley at C. The beam also loaded as shown in figure below. Find the reactions at A & C. 8

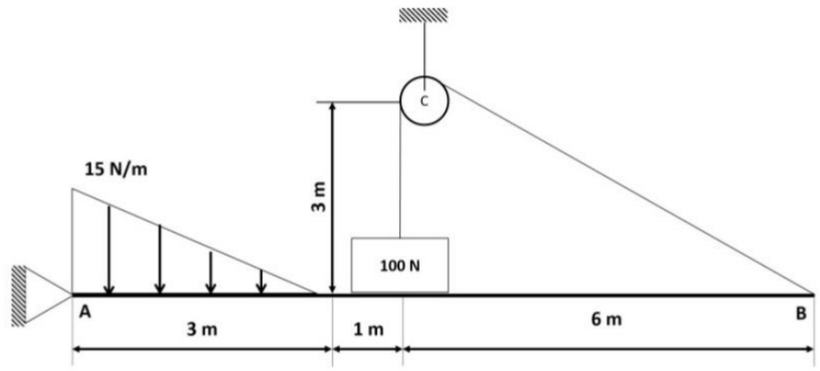

(c) Prove that for a perfectly elastic body, two equal masses participating in collision exchange their velocities. 6

3. (a) Find Centroid of shaded area with reference to X and Y axes. 8

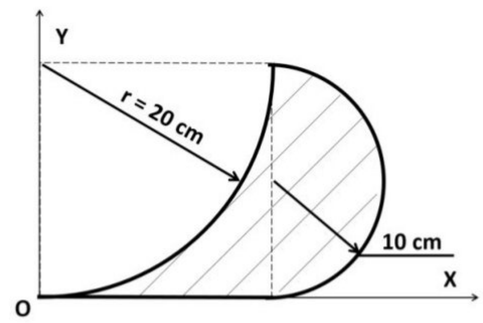

(b) Find the resultant of the spatial concurrent force system concurrent at A (1, 0, 0) and passing through points B (–1, 3, 5), C (3, 5, 7), D (0, 4, 0). Magnitudes of forces F_{AB} = 1000N, F_{AC} = 150N, F_{AD} = 200 N. 6

(c) A colliar of mass 1 kg is attached to a spring ad slides without friction along a circular rod which lies in a horizontal plane. The spring is under formed when the colliar is at 8. Knowing that the colliar is passing through the point D with a speed of 1.8 m/s, determine the speed of the colliar when it passes through point C and B. Take Stiffness of the spring, k = 250 N/m, Radius of the circular path = 300 mm and distance OA = 125 mm. 6

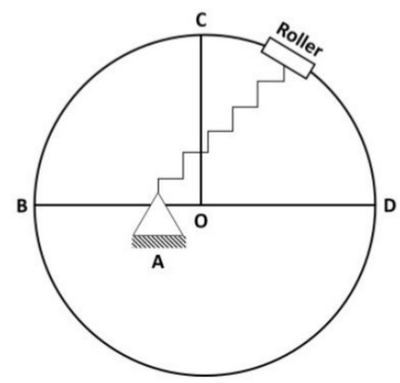

4. (a) Find the reactions at supports A and E for the beam loaded as shown in the figure below. 8

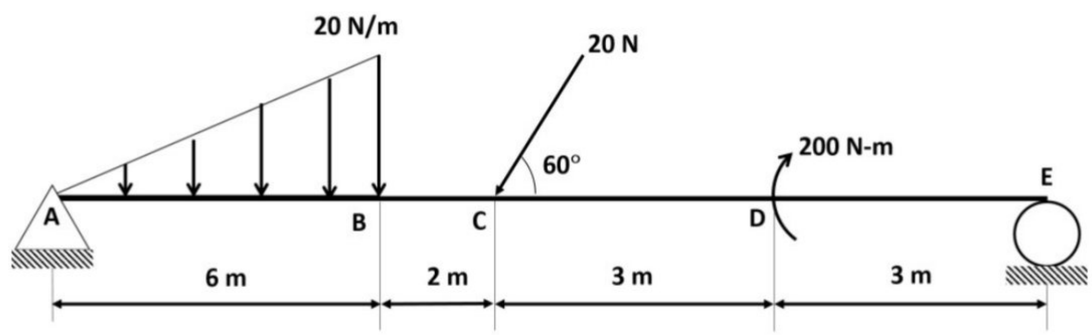

(b) A fighter Plane moving horizontally with a constant velocity of 200 m/seconds releases a bomb from an altitude of 400 m. Find the velocity and direction of the bomb just before it strikes the ground. Also determine the distance travelled by the plane before the bomb just strikes the ground. 6

(c) Find velocity of C and Point D at the instant shown ω_{AB} = 3 rad/sec clockwise AB = 400 mm. 6

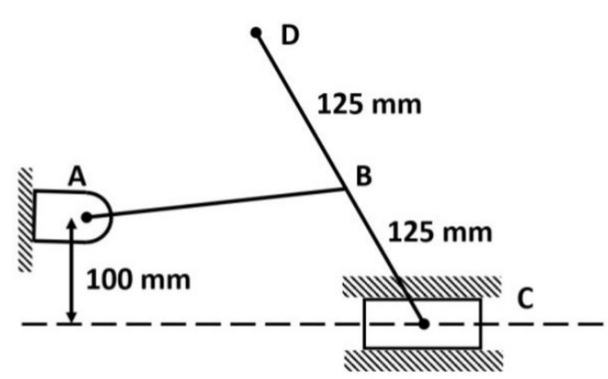

5. (a) Find the forces CF and CD by method of section and the remaining by Method of joints. 8

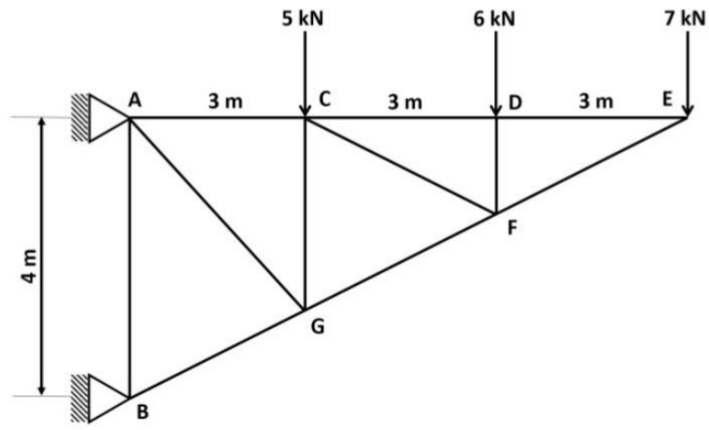

(b) For a vehicle moving along a straight line, v-t diagram is as shown in figure below. Plot a-t & s-t diagram for the given time period. 6

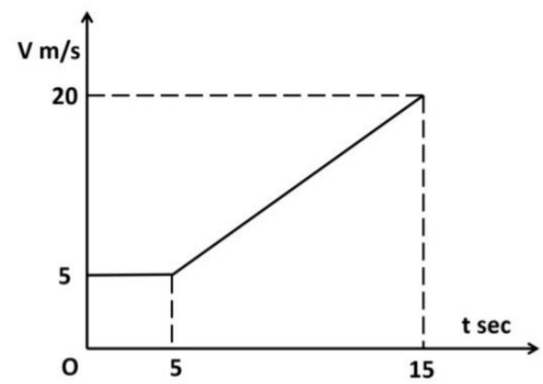

(c) A wheel is rolling along a straight path without slipping. Determine velocity of points A, B and P. OP = 600 mm, ϕ = 4 rad/sec, V_0 = 4m/sec. 6

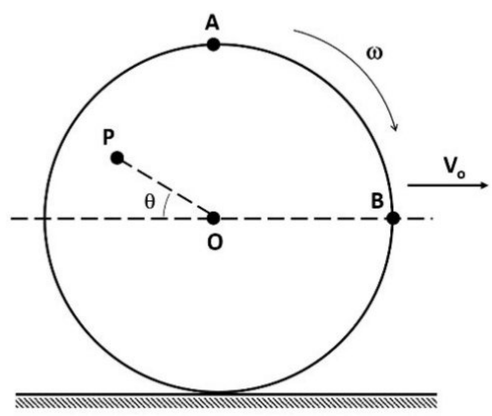

6. (a) A force of magnitude 500 N is acting from A (2, 3, 6) and passes through a point B (6, 2, 6). Compute its moment about point C (4, 6, 3). 4

(b) A stone is thrown with a velocity (u) m/sec at an angle of 20° with horizontal from a point 2 m above the ground. The stone strikes the ground 5 m from the original position. The

motion of stone is subjected to gravitational acceleration & wind resistance of 0.82 m/sec^2. Opposing the horizontal motion. Determine the time of fight of the stone. 4

(c) A heavy metal bar AB rests with its lower end A on a rough horizontal floor having coefficient of friction μ_r & the other end B on a rough vertical wall having coefficient of friction μ_w. If the centre of gravity of the bar is at distance a & b from the ends A & B respectively, show that at impending motion, the inclination of the bar with the horizontal will be. 8

$$\theta = \tan^{-1}\left(\frac{1}{\mu_P}\frac{a-b}{a+b}_{\mu_P\mu_w}\right)$$

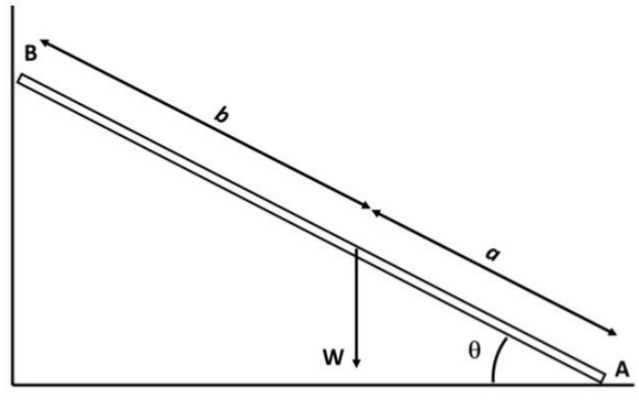

(d) Two masses are interconnected with the pulley system Neglecting inertial & frictional effect of pulleys & cord, determine the acceleration o the mass m_1. 4
Take m_1 = 50 kg & m_2 = 40 kg.

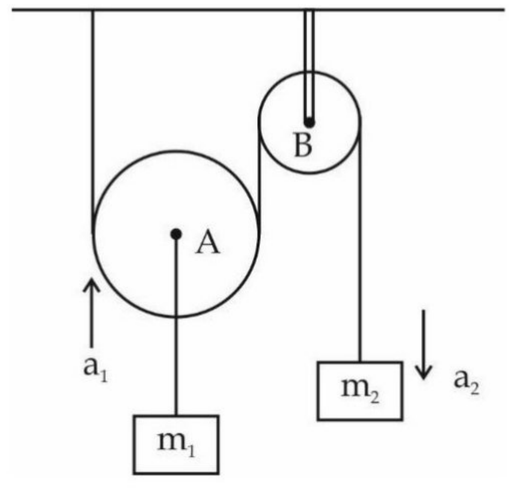

****

Engineering Mechanics (Sem-I) May-2016

Solutions

Sol.1 (a)

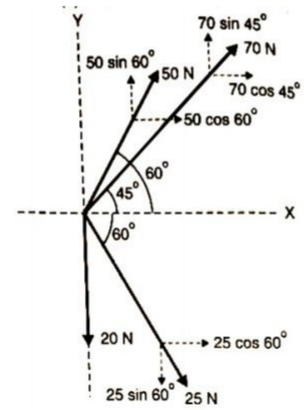

$\sum F_X = 50 \text{ Cos } 15 + 70 \cos 45 + 25 \cos 60 = 86.99$ N (→)

$\sum F_Y = 50 \text{ Sin } 60 + 70 \text{ Sin } 45 - 25 \text{ Sin } 60 - 20 = 51.148$ N (↑)

Resultant = $\sqrt{\sum F_X^{\,2} + \sum F_Y^{\,2}} = \sqrt{86.99^2 + 51.48^2}$

= 100.9122 N

Angle $\tan\theta = (\sum F_Y / \sum F_X)$

$\Theta = \tan^{-1}(51.48/86.99) = 30.45^0$

Sol.1 (b)

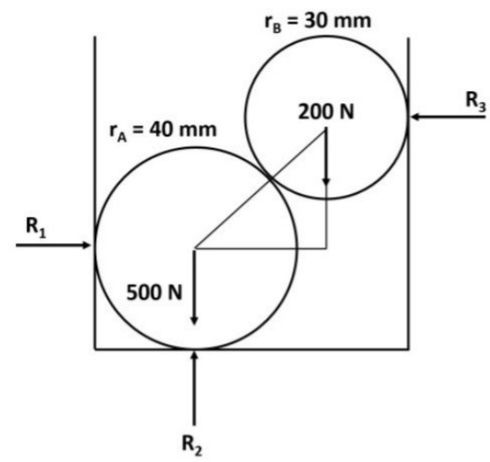

For entire system, apply three conditions of equilibrium

$\sum F_X = 0$; $R_1 - R_3 = 0$

$\therefore R_1 = R_3$

$\sum F_X = 0$; $R_2 - 500 - 200 = 0$

$\therefore R_2 = 700$ N (↑)

$\sum M_A = R_3 (BM) - 200 (AM) = 0$

Where AM = 80 – 30 = 50 mm

BM = $\sqrt{(AB)^2 - (AM)^2} = \sqrt{(70)^2 - (50)^2} = 49$ mm

$\therefore R_3 (49) - 200 (50) = 0$

$R_3 = 204.08$ N (←)

$R_1 = 204.08$ (→)

Sol.1 (c)

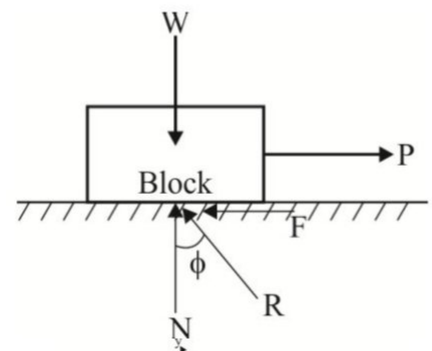

Angle of friction: For impending motion angle made by normal with the resultant of normal & frictional force

$$\tan\phi = \frac{F}{N} = \frac{\mu N}{N} = \mu$$

Angle of repose: Angle made by inclined plane with the horizontal plane at which body is on the verge of motion without any external force

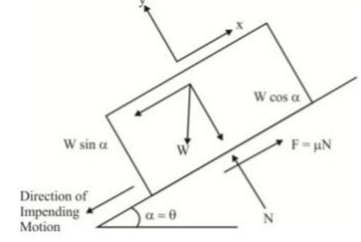

Sol.1. d

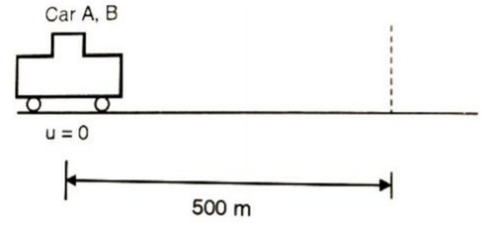

For Car A : u=0

S = 500 m

Time = t sec

$S = ut + 0.5 * a * t^2$

$500 = 0 + 0.5 * aA * t^2$……(1)

Foe Car B :

u=0
S = 500 m
Time = (t-5) sec
$S = ut + 0.5 * aB * t^2$
$500 = 0.5 * 5 * (t-5)^2$
t= 19.14 sec
substituting bin (1)
$a_A = 2.73\ m/s^2$

Sol.1 (e)

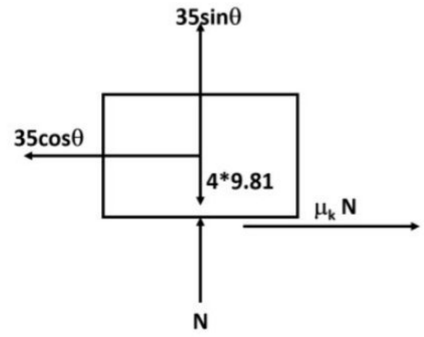

For dynamic equilibrium
$\sum F_X = 0$
$-35 \cos\theta + m * a + 0.5\ N = 0$
$-35 \cos\theta + 4 * 10 + 0.5\ N = 0$……(1)
$\sum F_Y = 0$
$35 \sin\theta - (4*9.81) + N = 0$
N = 39.24 N
Substituting in (1),
$\Theta = 118.45^0$

Sol.2 (a)

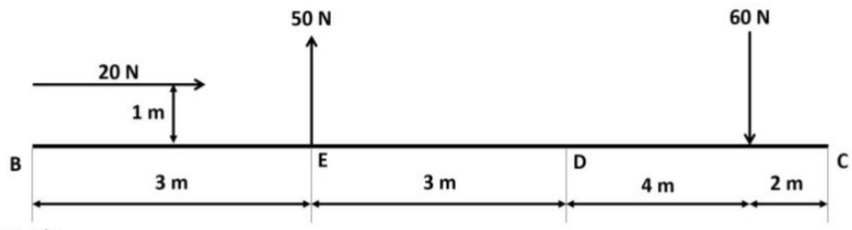

$\sum F_Y = 50 - 60 = 10\ N\ (\downarrow)$
$\sum F_X = 20\ N\ (\rightarrow)$
Resultant = $\sqrt{\sum F_X^{\ 2} + \sum F_Y^{\ 2}} = \sqrt{20^2 + 10^2} = 22.36$ N
Angle $\tan\theta = (\sum F_Y / \sum F_X)$
$\Theta = \tan^{-1}(10/20) = 26.56^0$
Applying Varignon's theorem,
$\sum M_C = R * d;$
$(-20*1) - (50 * 9) + (60 * 2) = 22.36 * d$
d= 15.65 m

Sol.2 (b)

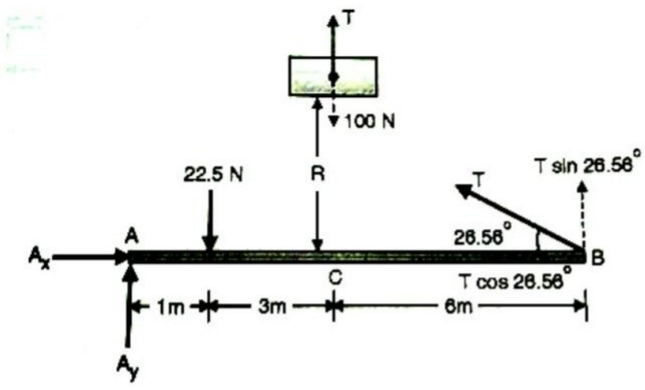

For beam
$\sum M_A = (-22.5 * 1) - (R * 4) + (T \sin 26.56^0 * 10) = 0$
$4.47\ T - 4R = 0$…… (1)
$\sum F_X = 0;$
$A_x - T \cos(26.56)^0 = 0$
$A_x = 0.89\ T$…… (2)
$\sum F_Y = 0;$
$A_Y - 22.5 - R + T \sin(26.56)^0 = 0$
$A_Y = R + 22.5 - T \sin(26.56)^0$…… (3)
For Block
$\sum F_Y = 0;$
$T + R - 100 = 0$
$\therefore T + R = 100$

Solving (1) & (4)
T = 49.88 N
R = 50.12 N
Substituting in 2 & 3
A_X = 44.39 N (→)
A_Y = 50.17 N (↑)

Sol.2 (c)

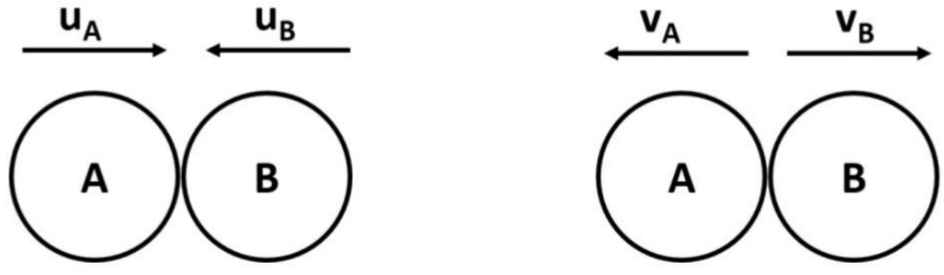

Let the Body A & B are moving towards each other with velocity u_A& u_B
Velocity after impact are V_A& V_B
Applying conservation of momentum
$m_A u_A + m_B u_B = m_A v_A + m_B v_B$
$m_A = m_B = 1$
$u_A - u_B = -v_A + v_B$
$u_A + v_A = v_B + u_B$ ……..(1)

Now for elastic impact,

Coefficient of restitution, $e = 1 = \dfrac{v_B - v_A}{u_A - u_B}$ ……..(2)

From (1)&(2)

$u_A = v_B$ & $u_B = v_A$

Sol.3 (a)

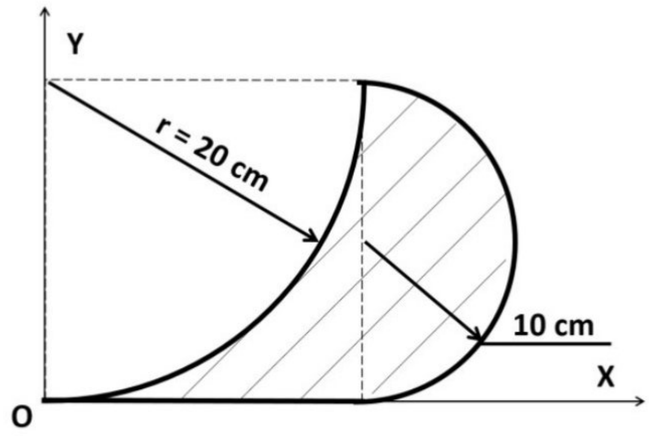

Component	*Area 'A$_i$' (cm^2)*	*Co-ordinates 'X$_{Gi}$'(mm)*	*Co-ordinates 'Y$_{Gi}$'(mm)*
Semi-circle	$\Pi r^2 / 2$ $= \Pi [10]^2/2$ $= 157.08$	$=20 + 4r/3\Pi$ $=20+ 4[10]/3\Pi$ $= 24.24$	R = 10
Square	20 x 20 = 400	$\frac{b}{2} = 10$	$\frac{h}{2} = 10$

Quarter circle	$\Pi r^2 / 4$ $= \Pi 20^2 / 4$ $=314.5$	$4r/3\Pi$ $=4*20/3\Pi$ $= 8.48$	$= r - 4r/3\Pi$ 11.52
$\sum$	$\sum A_i = 242.91$		

$$\bar{X} = \frac{\sum A_i X_{Gi}}{\sum A_i} = \frac{5141.41}{242.91} = 21.169\ mm$$

$$\bar{Y} = \frac{\sum A_i Y_{Gi}}{\sum A_i} = \frac{1953.71}{242.91} = 8.04\ mm$$

Centroid [X̄, Ȳ] = [21.169, 8.04] mm

Sol.3 (b)

$F_{AB} = 100$ N, $F_{AC} = 150$ N, $F_{AD} = 200$ N

Coordinates, A = (1, 0, 0), B = (-1, 3, 5), C = (3, 5, 7), D = (0, 4, 0)

Putting forces in vector form, $\overline{F_{AB}} = F_{AB}\ \overline{e_{AB}}$ ..... (Multiplication)

$$= 100\left[\frac{(-1-1)\bar{i} + (3-0)\bar{j} + [5-0]\bar{k}}{\sqrt{(-1-1)^2 + (3-0)^2 + [5-(0)]^2}}\right]$$

$= -32.441\ i + 48.67\ j + 81.11\ k$ N

Putting forces in vector form, $\overline{F_{AC}} = F_{AC}\ \overline{e_{AC}}$ ..... (Multiplication)

$$= 150\left[\frac{(3-1)\bar{i} + (5-0)\bar{j} + [7-0]\bar{k}}{\sqrt{(3-1)^2 + (5-0)^2 + [7-(0)]^2}}\right] = 33.97\ i + 84.93\ j + 118\ k \quad N$$

Putting forces in vector form, $\overline{F_{AD}} = F_{AD}\ \overline{e_{AD}}$ ..... (Multiplication)

$$= 200\left[\frac{(0-1)\bar{i} + (4-0)\bar{j} + [0-0]\bar{k}}{\sqrt{(0-1)^2 + (4-0)^2 + [0-0]^2}}\right] = -48.5\ i + 194.05\ j \quad N$$

Resultant R = $\overline{F_{AC}} + \overline{F_{AC}} + \overline{F_{AC}}$ = -46.97 i + 32. 763 j + 200.01 k

R = 386.71 N

Sol.3 (c)

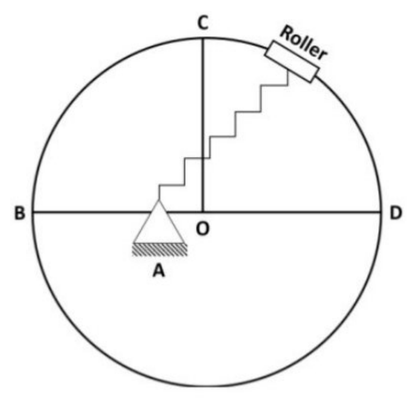

Motion of collar (D-B)

K = 250 N/m , V_D = 1.8 m/s

L_s=175 mm

δ_1=0.25 m

$\delta_2 = 0$

$W_s = 0.5 * K * (\delta_2^2 - \delta_1^2) = 0.5 * 250 * (0.25^2 - 0) = 7.5125$

$KE_1 = 0.5\ m * V_D^2$
$KE_2 = 0.5\ m * V_B^2$
By work energy principle
$W = (KE_2) - (KE_1)$
V_B **= 4.3423 m/s**
Motion of collar (D-C)
$K = 250$ N/m , $V_D = 1.8$ m/s
AC =325 mm
$\delta_1 = 0.25$ m
$\delta_2 = 0.15$ m
$W_s = 0.5 * K * (\delta_2^2 - \delta_1^2) = 0.5 * 250 * (0.25^2 - 0.15^2) = 5$
$KE_1 = 0.5\ m * V_D^2$
$KE_2 = 0.5\ m * V_C^2$
By work energy principle
$W = (KE_2) - (KE_1)$
V_C **= 3.6386 m/s**
Sol.4 (a)

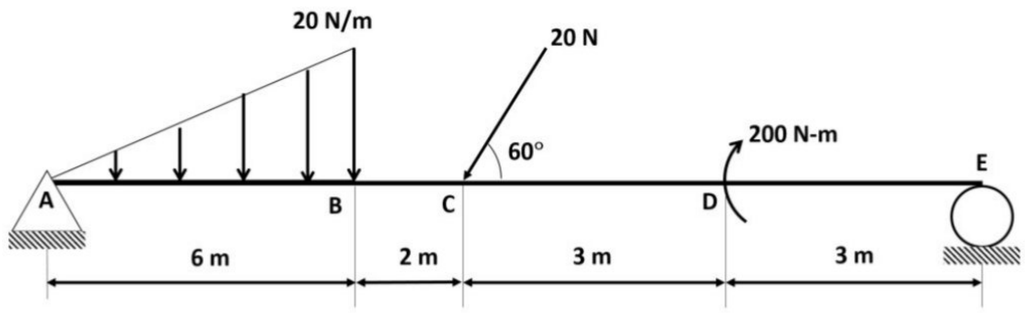

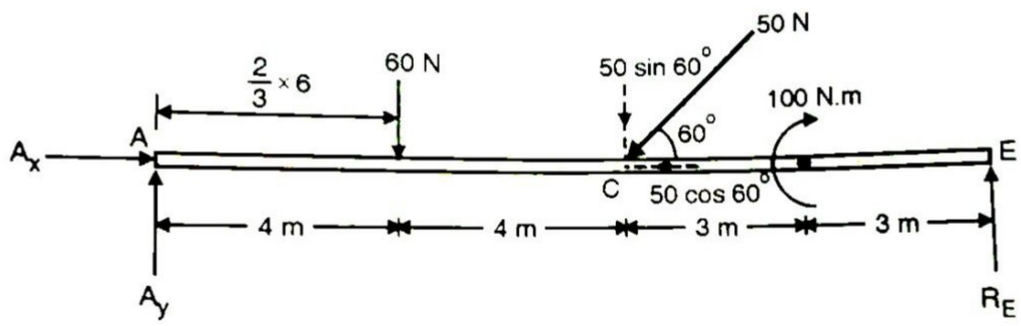

Applying conditions of equilibrium
$\sum M_A = 0;$
$(-60*4) - (50 \sin 60^0 *8) -100 + (R_E *14) = 0$
$R_E = 49$ N (↑)
$\sum F_Y = 0;$
$A_Y - 60 -50 \sin 60^0 + R_E = 0$
$A_Y = 54.3$ N (↑)
$\sum F_X = 0;$
$A_X - 50 \cos 60^0 = 0$
$A_X = 25$ N (→)

Sol.4 (b)
Consider y motion from A to B (MUG)
$S_y = u_y * t - 0.5\ (gt^2)$
$-400 = 0 - (0.5 * 9.81 * t^2)$
$\therefore t = 9.03$ sec
Consider x motion from A to B (UM)
$\therefore S_x = V_x\ t$
$X = 200\ (9.03)$

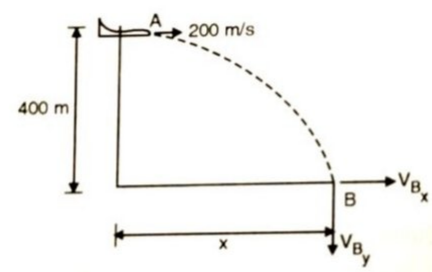

X = 1806 m
At B, Velocity when bomb strikes the ground in 4th quadrant but X motion is uniform so , V_{BX}= 200 m/s (→)
To find V_{By} consider y motion from A to B
∴ $V = u_y - gt$
∴V_{By}= 0 – 9.81 (9.03)
∴V_{By}= 88.58 m/s
Striking velocity at B,
$V_{BY} = \sqrt{V_{BX}^2 + V_{BY}^2}$ = 218.74 m/s
$\theta = \tan^{-1}(Vby/Vbx)$ =23.89^0 in 4th Quadrant
Distance covered by plane before bomb strikes the ground is 1806 m

Sol.4 (c)

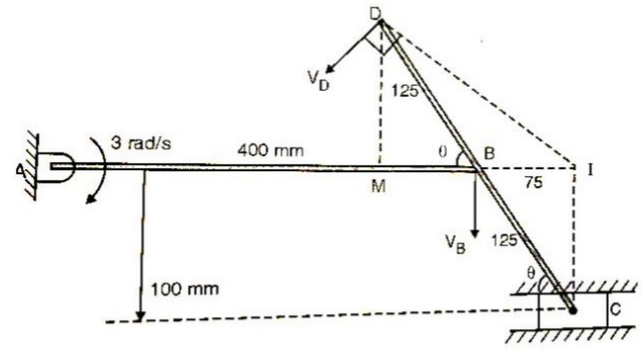

Sin θ = 100/125
∴ θ = 53.13^0
∴ DM = 100 mm &
BM = 125 cosθ = 75 mm
DI = $\sqrt{100^2 + 150^2}$ = 180.27 mm
For Link AB: (ICR is A)
∴ $V_A = 0$
∴ $V_B = BA * \omega_{AB}$= 0.4 * 3 = 1.2 m/s
For Link CBD (ICR is I)
∴$V_C = IC * \omega = 0.1 * 16 = 1.6$ m/s
$V_B = BI * \omega_{CD}$
$1.2 = 0.0075 * \omega_{CD}$
ω_{CD} = 16 rad / sec
$V_D = ID * \omega = 0.18 * 16 = 2.88$ m/s

Sol.5 (a)

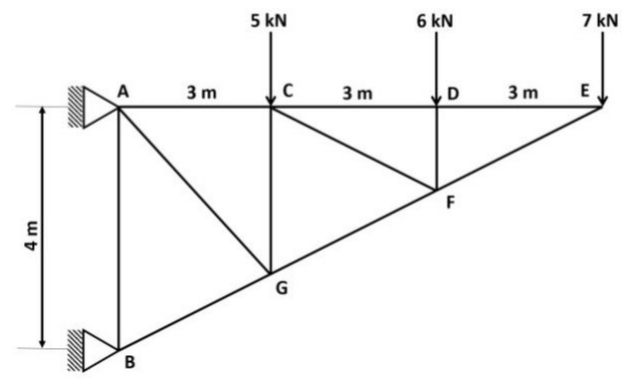

Method of section
F_{CD} = 15.75 KN (T)
F_{CF} = 7.385 KN (T)
F_{FG} = 24.624 KN (T)
Method of Joints
F_{CD} = 15.75 KN (T)
F_{DG} = 15.75 KN (T)
F_{CG} = 7.99 KN (T)
F_{CA} = 22.50 KN (T)
F_{GB} = 33.41 KN (C)

Sol.5 (b)

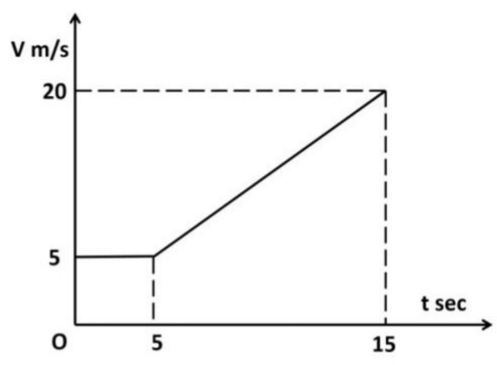

a-t diagram

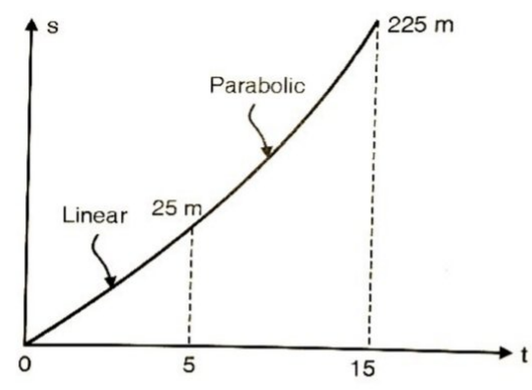

From 0 to 5 sec, V= constant ∴ a=0
From 0 to 15 sec,
Slope= a= (20-5/15-5) = 1.5 m/s^2
x-t diagram OR s-t diagram
from a-t diagram, by moment equation
$x_5 = x_0 + v_0 * t + M_t = 0+5(5) +0 = 25$ m
$x_{15} = 0+5(15) +(1.5*10*10) = 225$ m

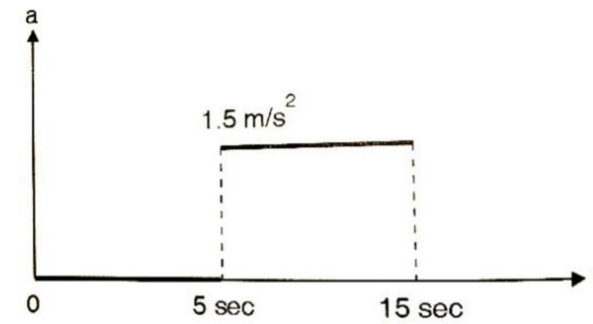

Sol.5 (c)
Here roller rolls without slipping so point C is ICR
$\therefore V_o = IO * \omega$
4 = IO * 4
IO = 1 m = Radius
$V_A = IA * \omega = 2 * 4 = 8$ m/s
$V_B = IB * \omega = 1.414 * 4 = 5.656$ m/s
IB = $\sqrt{OB^2 + OI^2} = \sqrt{1^2 + 1^2} = \sqrt{2} = 1.414$
$IP^2 = OP^2 + OI^2 - 2 * OP * IP * \cos 110^0$
IP = 1.33 m
$V_P = IP * \omega = IP * \omega = 1.33 * 4 = 5.32$ m/s

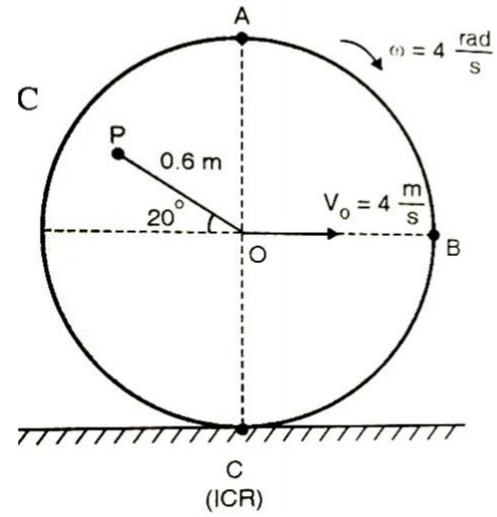

Q 4 c
Sin θ = 100/125
$\therefore \theta = 53.13^0$
∴ DM = 100 mm &
BM = 125 cosθ = 75 mm
DI = $\sqrt{100^2 + 150^2} = 180.27$ mm
For Link AB: (ICR is A)
$\therefore V_A = 0$
$\therefore V_B = BA * \omega_{AB} = 0.4 * 3 = 1.2$ m/s
For Link CBD (ICR is I)
$\therefore V_C = IC * \omega = 0.1 * 16 = 1.6$ m/s
$V_B = BI * \omega_{CD}$
$1.2 = 0.0075 * \omega_{CD}$
$\omega_{CD} = 16$ rad / sec
$V_D = ID * \omega = 0.18 * 16 = 2.88$ m/s

Sol.6 (a)
$F_{AB} = 500$ N
Coordinates, A = (2, 3, 6), B = (6, 2, 6), C = (4, 6, 3)
Putting forces in vector form,
$\overline{F_{AB}} = F_{AB} \cdot \overline{e_{AB}}$ ..... (Multiplication)

$$= 500 \left[\frac{(6-2)\bar{i} + (2-3)\bar{j} + [6-6]\bar{k}}{\sqrt{(6-2)^2 + (2-3)^2 + [6-6]^2}} \right]$$

$= 485.08\, i + 121.27\, j$ N

$$M_C^A = \begin{vmatrix} i & j & k \\ -2 & -3 & 3 \\ 485.08 & -121.27 & 0 \end{vmatrix} = 363.81\, i + 1455.24\, j + 1697.78\, k$$

$M_c = 2265.51$ N m

Sol.6 (b)

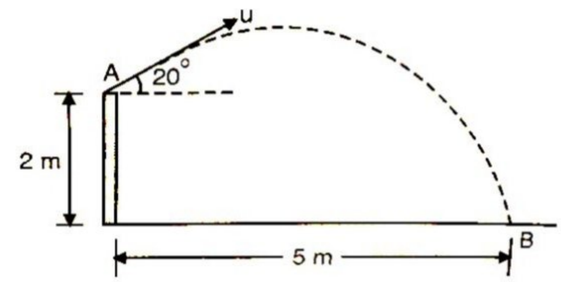

Consider x motion A to B (U.A.M.)

$S_x = u_{xt} + (05 * a_x * t^2)$

$5 = (u \cos 20) + (0.5 * -0.82 * t^2)$

$5 = 0.94\ ut - 0.41\ t^2$……(1)

Consider y motion from A to B (MUG)

$S_y = u_y * t - 0.5\ (gt^2)$

$-2 = u \sin 20\ t - 4.905\ t^2$

$4.905\ t^2 = 0.34\ ut + 2$……(2)

$t^2 = (1/4.905) * (0.34\ ut + 2)$……(3)

Substitute in equation (1)

ut = 5.68

Substituting in (3)

t=0.895 sec

Sol.6 (c)

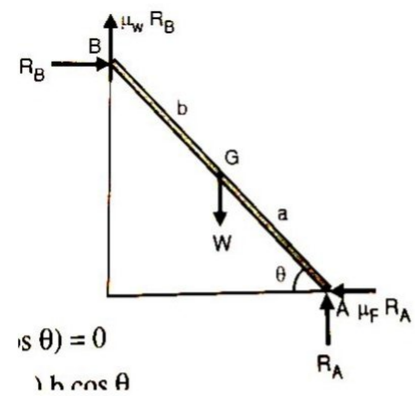

$\sum F_X = 0$

$\therefore R_B - \mu_F * R_A = 0$

$\therefore R_B = \mu_F * R_A$

$\sum F_Y = 0$

$\therefore R_A + \mu_W * R_B - W = 0$

$\therefore R_A + \mu_W * (\mu_F * R_A) - W = 0$

$\therefore R_A\ (1 + \mu_W * \mu_F) = W$

$\sum M_B = 0;$

$\therefore R_A\ (a + b) \cos\theta - \mu_F R_A\ (a + b) \sin\theta - W\ (b \cos\theta) = 0$

$\therefore\ R_A\ (a + b) \cos\theta - \mu_F R_A\ (a + b) \sin\theta = R_A\ (1 + \mu_W * \mu_F)\ (b \cos\theta)$

$(a + b) \cos\theta - (1 + \mu_W * \mu_F)\ (b \cos\theta) = \mu_F\ (a+b) \sin\theta$

$\tan\theta = (\frac{a - b * \mu W * \mu F}{a+b}) * (\frac{1}{\mu F})$

Sol.6 (d)

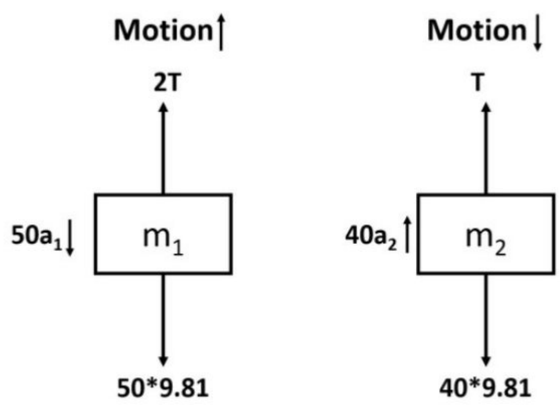

By D'almbert law on block M_1

$2T - (50*9.81) = 50 * a_1$……(1)

By D'almbert law on block M_1

$-T + (40*9.81) = 40 * a_2$……(2)

Solving (1) & (2)

T = 280.285 N

$a_1 = 1.401$ m/s^2

$a_2 = 2.802$ m/s^2

Engineering Mechanics (Sem-I) May-2017
(Revised Course) CBGS

Time : 3 Hours **Total Marks : 80**

N.B. : (1) Question No.1 is compulsory.
(2) Attempt any three questions from remaining Question Nos. 2 to 6.
(3) Assume suitable data if necessary and mention the same clearly.
(4) Take g = 9.81 m/s²

Q.1 a) In the rocket arm shown in fig the moment of 'F' about 'O' balances that 'P'=250 N find 'F'. **04**

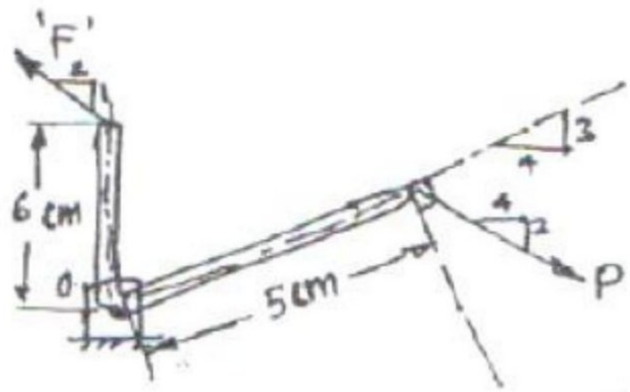

b) State Lami's theorem. State the necessary condⁿ for application ofLami's theorem. **04**

c) A homogeneous cylinder 3m diameter and weighting 400N is resting on two rough inclined surface's shown. If the angle of friction is 15° find couple 'C'.appliedto.the cylinder that will start it rotating clockwise. **04**

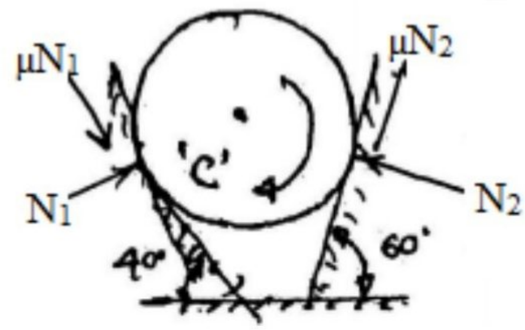

d) From (v-t) diagram find (i) distance travelled in 10 sec. (ii) total distance travelled in 50 sec.(iii) Retardation. **04**

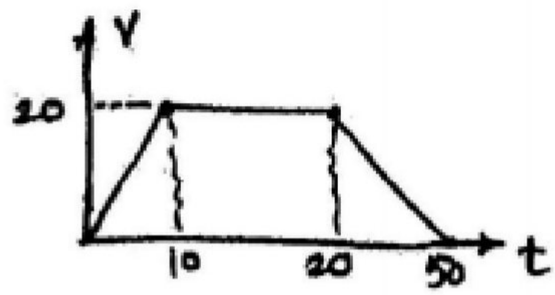

e) Blocks P_1 and P_2 are connected by inextensible string. Find velocity of block P_1, if it falls by 0.6m starting from rest.The coefficient of friction is 0.2, pulley is friction less. **04**

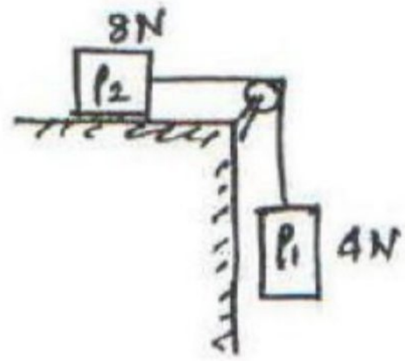

Q.2 a) Compute the resultant of the forces acting on the plate shown in fig. Locate intersection with AB and AC. **06**

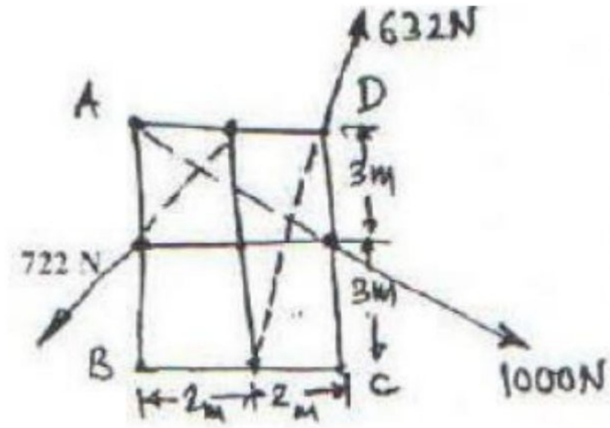

b) Two cylinders 1 and 2 are connected by a rigid bar of negligible weight hinged to each cylinder and left to rest in equilibrium in the position shown under the application of force'P' applied at the center of cylinder 2. Determine the magnitude of force 'P'.If the weight of cylinders 1 and 2 are 100N and 500N respectively. **08**

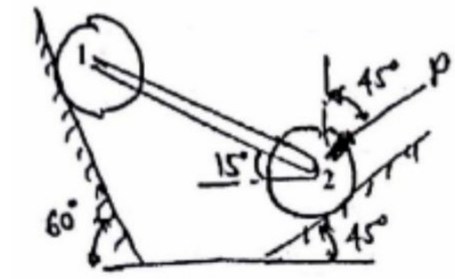

c) Just before they collide, two disk on horizontal surface have velocity shown in Fig. Knowing that 90N disk 'A' rebounds to the left with a velocity of 1.8 m/s. Determine the rebound velocity of the 135N disk 'B' Assume the impact is perfectly elastic.

06

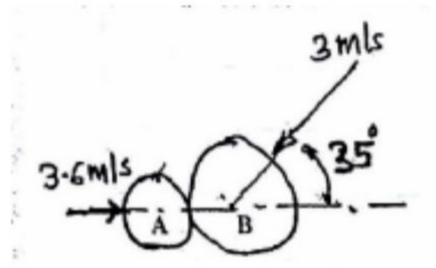

Q.3 a) Find the centroid of the shaded portion of the plate shown in the fig. **08**

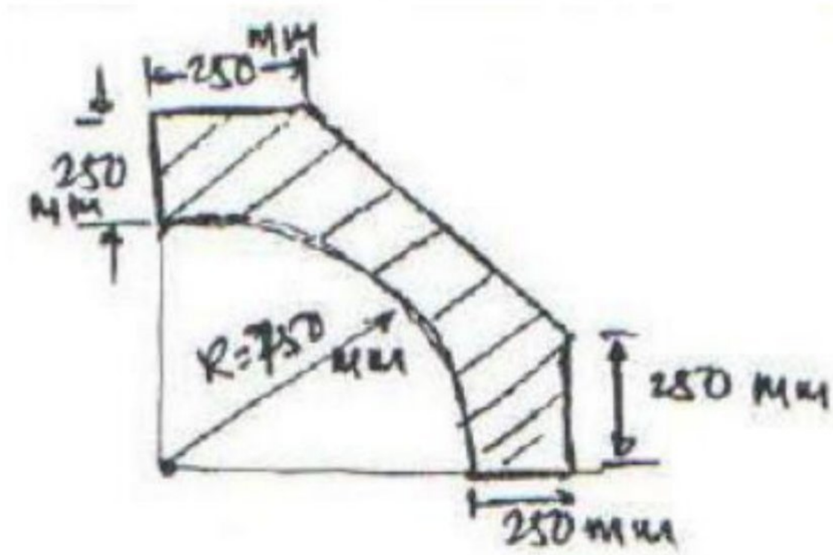

b) Co-ordinate distance are in 'm' units for the space frame in fig.There are 3 members. AB,AC and AD. There is a force W-20kN acting at A in a vertically upward direction. Determine the tension in AB, AC and AD. **06**

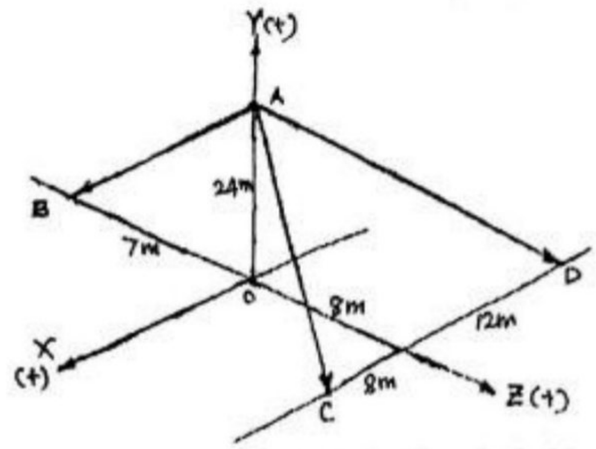

c) A 50N collar slides without friction along a smooth rod which is kept inclined at 60^0 to the horizontal.The spring attached to the collar and the support 'C'.The spring is unstreched when the collar is at 'A'(AC is horizontal)Determine the value of spring constant 'K' given the collar has a velocity of 2.5 m/s when it has moved 0.5m along the rod as shown in fig. **06**

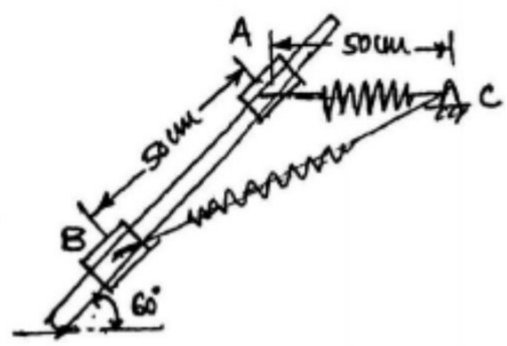

Q.4 a) A boom AB is supported as shown in fig by a cable runs from 'C' over a small pulley at D. Compute the tension T in cable and reaction at A. Neglect the weight of the boom and size of the pulley. **08**

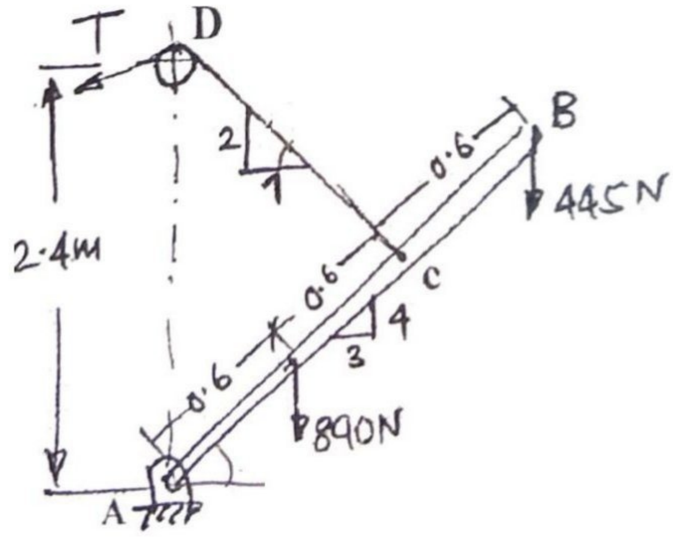

b) The acceleration of the train starting from rest at any instant is given by the expression $a=\frac{8}{v^2+1}$, where v is the velocity of the train in m/s. Find the velocity of the train when its displacement is 20m and its displacement when its velocity is 64.8 kmph. **06**

c) Angular velocityof the connector BC is 4 r/s in clockwise direction. What are the angular velocities of crank AB and CD. **06**

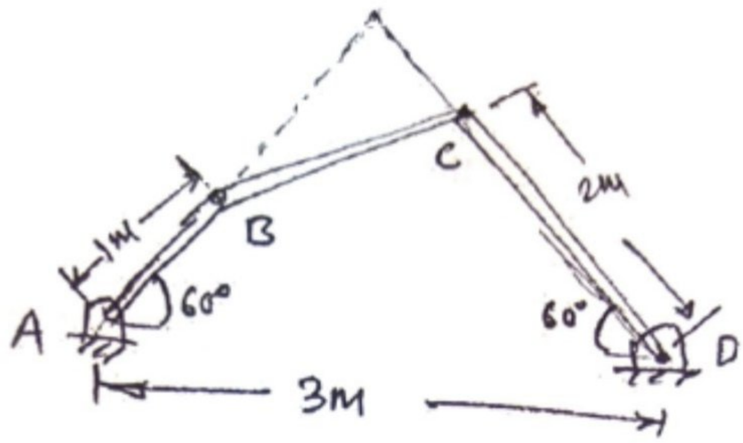

Q.5 a) In the truss shown in fig. compute the force in each member. **08**

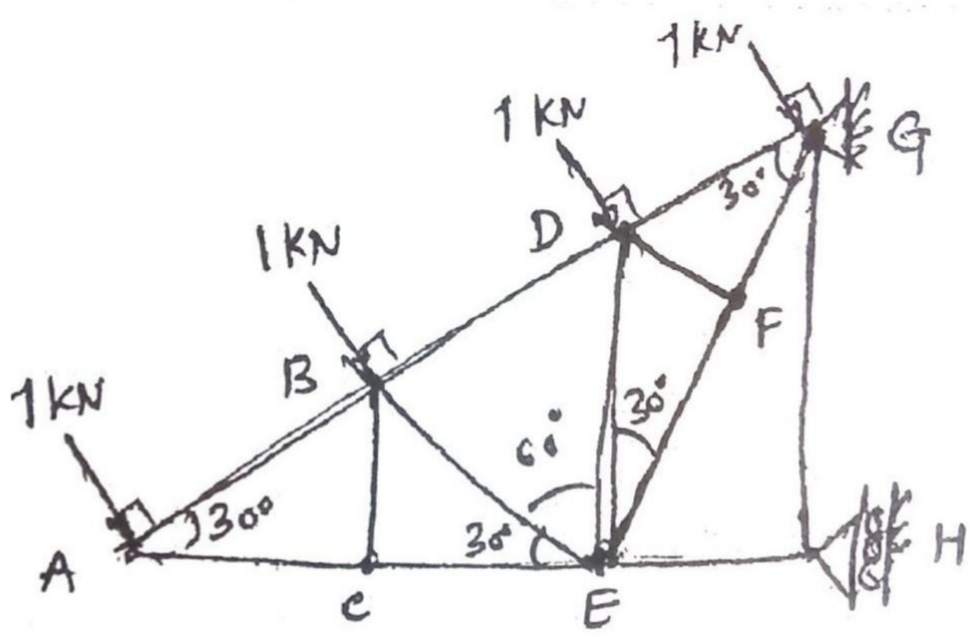

b) Determine the speed at which the basket ball at 'A' must be thrown at an angle of 30^0 if makes it to the basket at B. Also find at what speed it passes through the hoop. **06**

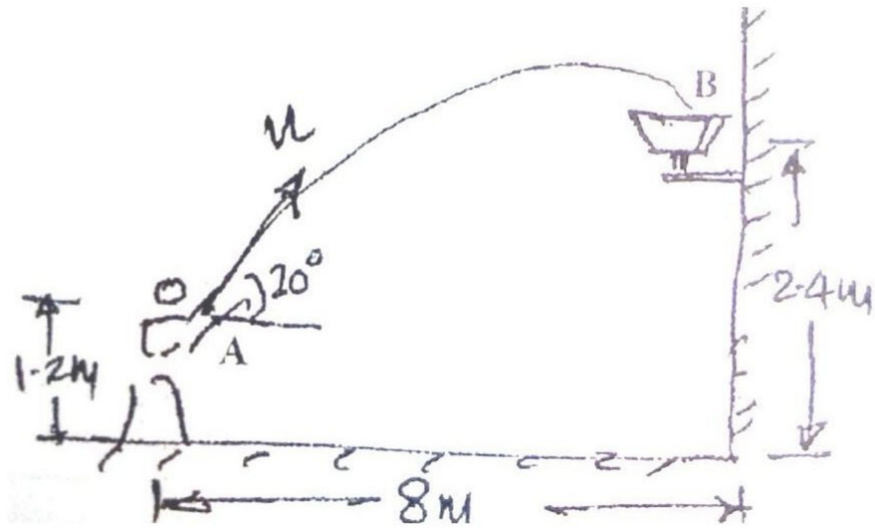

c) Fig. shows a collar B which moves upward with constant velocity of 1.5 m/s. At the instant when θ=50^0 determine (i) the angular velocity of rod pinned at B and freely resting at A against 25^0 sloping ground and (ii) the velocity of end A of the rod. **06**

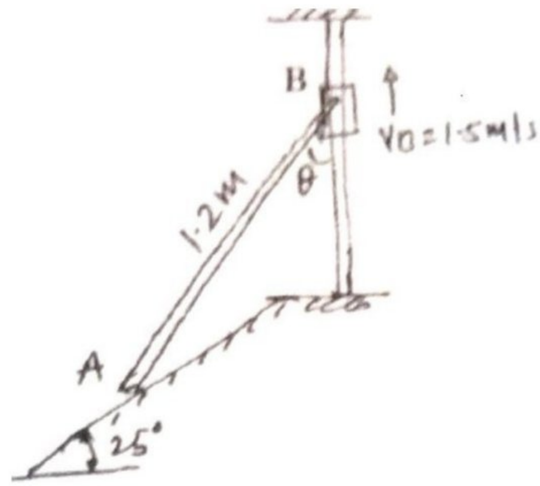

Q.6 a) A force of 140kN passes through point C(-6,2,2) and goes to the point B(6,6,8). Calculate moment of force about origin. **04**

b) Ref. to fig. if the coefficient of friction is 0.60 for all contact surface and θ=30^0, what force 'P' applied to the block 'B' acting down and parallel to the incline will start motion and what will be the tension in the cord parallel to inclined plane attached to 'A'. Take W_A= 120N and W_B= 200N. **08**

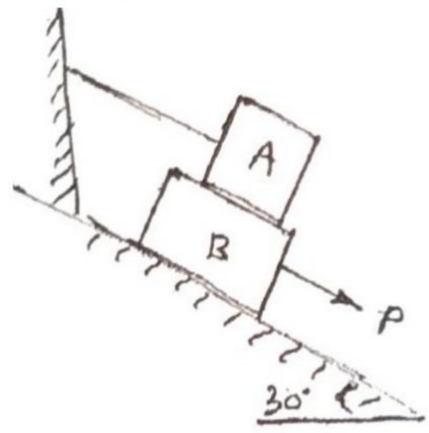

c) Determine the required stiffness 'K' so that the uniform 7kg bar AC is in equilibrium whenθ=30^0. Due to the guide at B the spring remains vertical and is unstretched when θ=0. Use principle of virtual work. **04**

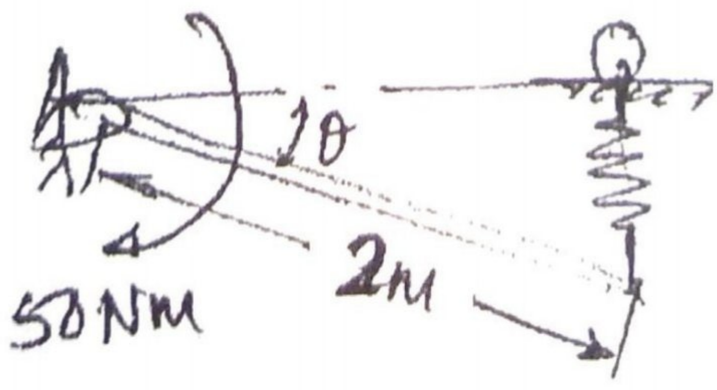

d) The system shown in fig is initially at rest. Neglecting friction determine the force 'P' required if the velocity of the collar B is 5m/s after 2 sec and corresponding tension in the cable. **04**

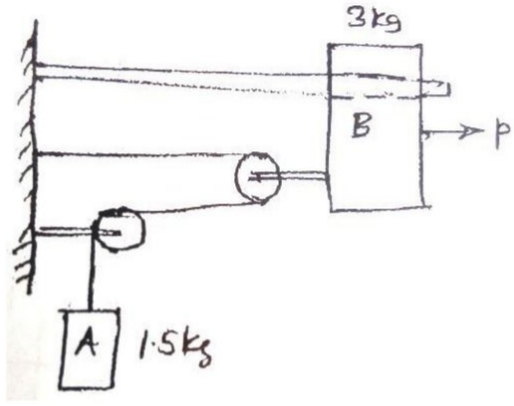

****

Engineering Mechanics (Sem-I) May-2017
Solution

Q.1 a) **In the rocket arm shown in fig the moment of 'F' about 'O' balances that 'P'=250 N find 'F'.** **04**

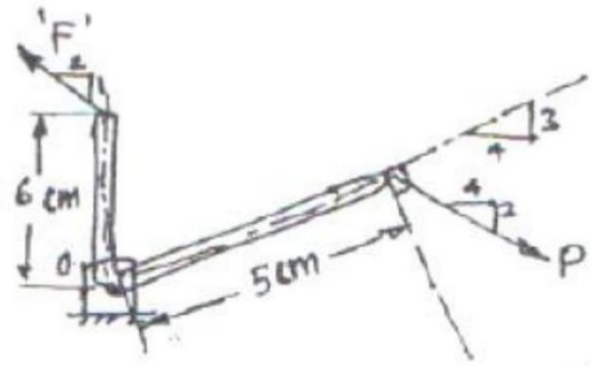

b) **State Lami's theorem. State the necessary condⁿ for application ofLami's theorem.** **04**

c) **A homogeneous cylinder 3m diameter and weighting 400N is resting on two rough inclined surface's shown. If the angle of friction is 15° find couple 'C'.appliedto.the cylinder that will start it rotating clockwise.** **04**

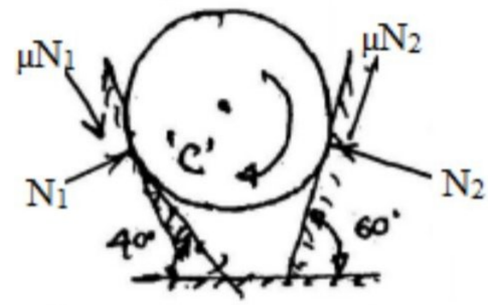

d) **From (v-t) diagram find (i) distance travelled in 10 sec. (ii) total distance travelled in 50 sec.(iii) Retardation.** **04**

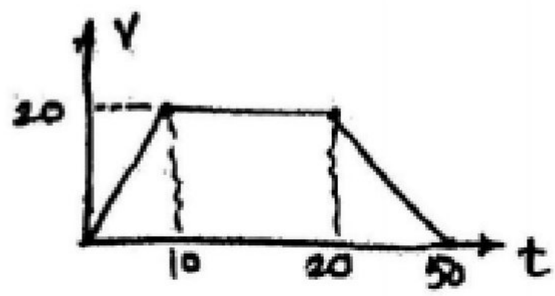

e) **Blocks P_1 and P_2 are connected by inextensible string. Find velocity of block P_1, if it falls by 0.6m starting from rest.The coefficient of friction is 0.2, pulley is friction less.** **04**

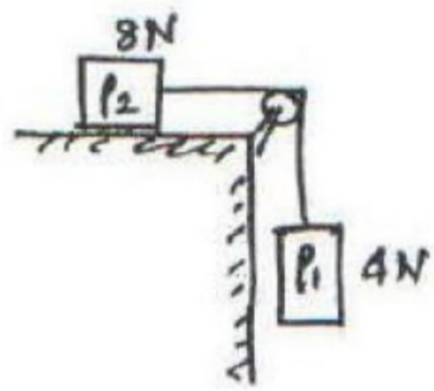

Sol.1 (a)

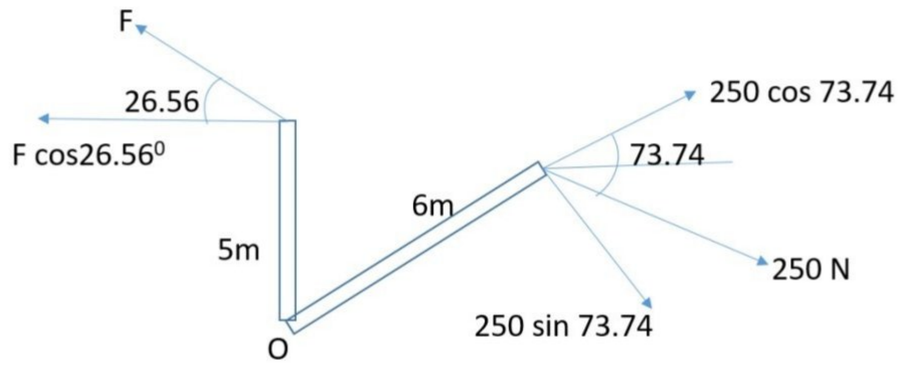

$\sum M_o=0$

6*F*cos 26.56 = 250 sin 73.74*5 (2)

F=223.6 N(1)

Sol.1 (b) Refer Module 2 (Lecture 11)

Sol.1 (c)

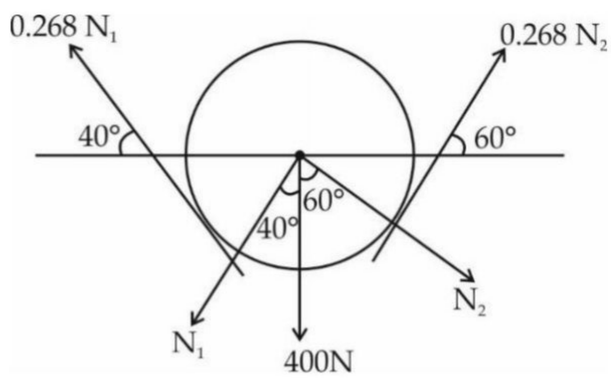

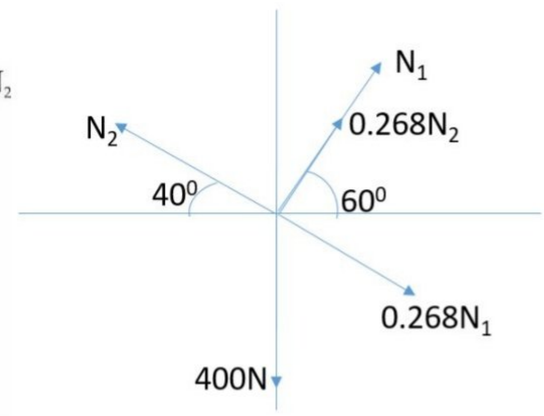

$\sum Fx = 0$ (0.5)

$0.848N_1 - 0.732N_2 = 400$

$\sum Fy = 0$ (0.5)

N_1 = 277.40 N (0.5)

N_2 = 321.38 N (0.5)

$\sum M_o= 0$

$0.268N_1*1.5 - 0.268N_2*1.2 - C = 400$ **C = 240.71 Nm** (1)

Sol.1 (d) Distance travelled in 10 sec = 0.5*10*20 = 100 m(1)

Distance travelled in 50 sec = 100+(20*10)+(0.5*20*30) = 600 m (2)

Retardation $=\frac{20}{30}$ = 0.67 m/s(1)

Sol.1 (e)

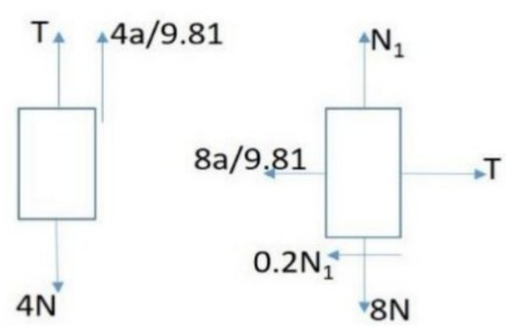

$T+\frac{4}{9.81}a = 4$ (0.5)

$T-\frac{8}{9.81}a = 0.2*8$ (0.5)

T = 3.2 N (0.5)

a = 1.962m/s² (0.5)

$v^2 = u^2 + 2as$ (0.5)

$v^2 = 0 + 2*1.962*0.6$ (0.5)

v = 1.534 m/s (0.5)

Q.2 a) Compute the resultant of the forces acting on the plate shown in fig. Locate intersection with AB and AC. 06

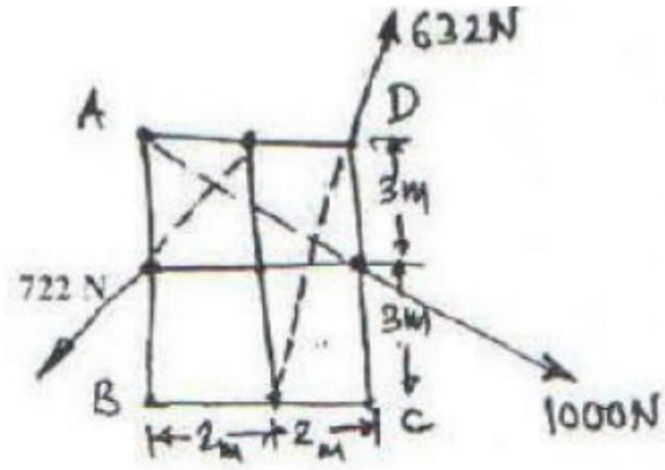

b) Two cylinders 1 and 2 are connected by a rigid bar of negligible weight hinged to each cylinder and left to rest in equilibrium in the position shown under the application of force'P' applied at the center of cylinder 2. Determine the magnitude of force 'P'.If the weight of cylinders 1 and 2 are 100N and 500N respectively. 08

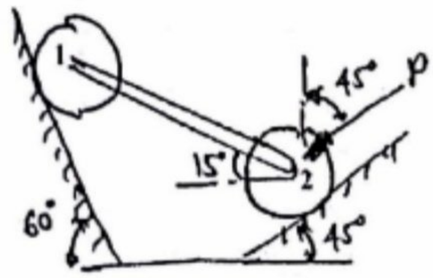

c) Just before they collide, two disk on horizontal surface have velocity shown in Fig. Knowing that 90N disk 'A' rebounds to the left with a velocity of 1.8 m/s. Determine the rebound velocity of the 135N disk 'B' Assume the impact is perfectly elastic. 06

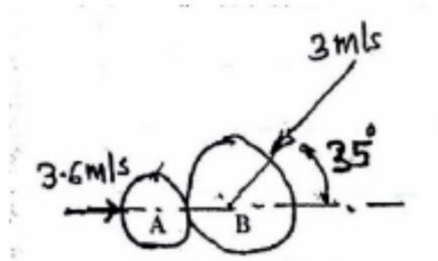

Sol.2 (a) $\theta_1 = 71.56^0, \theta_2 = 36.87^0, \theta_3 = 56.31^0$

$\sum Fx=0$

$632 \cos \theta_1 + 1000 \cos \theta_2 - 722 \cos \theta_3 = 599.36$ N (1)

$\sum Fy = 0$

$632 \sin \theta_1 - 1000 \sin\theta_2 - 722 \sin\theta_3 = -601.2$ N (1)

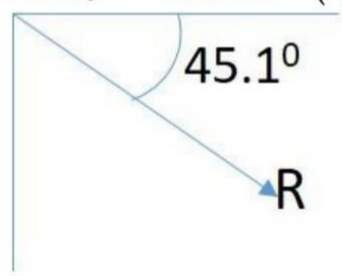

$\sum M_B = 632 \sin\theta_1 * 2 - 1000 \cos\theta_2 * 6 + 722 \cos * 6 - 722 \sin \theta_3 * 2$

$\sum \mathbf{M_B = 2400}$ **Nm (clockwise)** (2)

Intersection with AB = $\frac{2400}{599.36}$ **= 4.24 m** (0.5)

Intersection with BC = $\frac{2400}{601.2}$ **= 4m** (0.5)

Sol.2 (b)

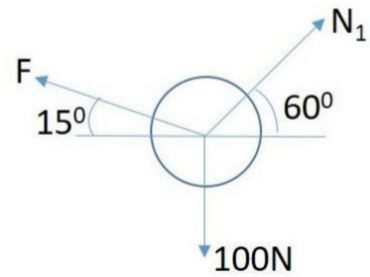

$\sum Fx = 0$

$-F \cos 15 + N_1 \sin 60 = 0$ (1)

$\sum Fy = 0$

$F \sin 15 + N_1 \cos 60 = 100$ (1)

N_1 = 136.60 N, F = 122.47 N **(2)**

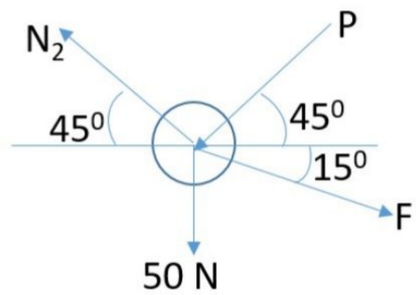

$\sum Fx = 0$

$-N_2 \sin 45 - P \cos 45 = -122.42 \cos 15$

$\sum Fy = 0$

$N_2 \cos 45 - P \sin 45 = 122.42 \sin 15 + 50$

N_2 = 141.37 N, P = 25.89 N **(2)**

Sol.2 (c) Velocity perpendicular to L.O.I remains unchanged (1)

V_{By}= -3 sin 35 = 1.72 m/s ↓

$m_1u_{1x} + m_2u_{2x} = m_1v_{1x} + m_2v_{2x}$ (3)

$9.17*3.6 + 13.76 * -3\cos 35 = 9.17*-1.8 + 13.76\ V_{Bx}$

V_{Bx} = 1.14 m/s →

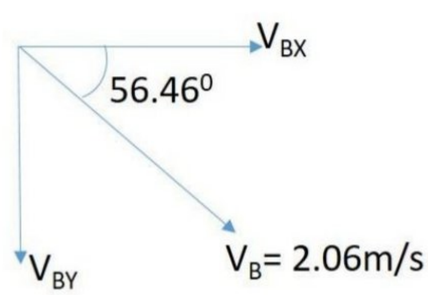

Q.3 a) **Find the centroid of the shaded portion of the plate shown in the fig.** **08**

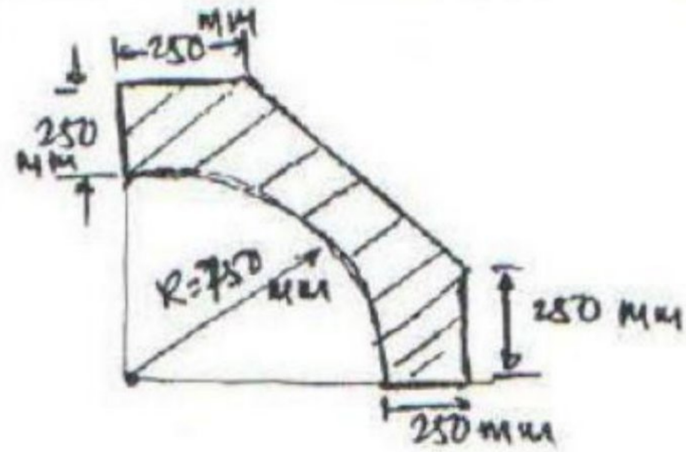

b) **Co-ordinate distance are in 'm' units for the space frame in fig.There are 3 members. AB,AC and AD. There is a force W-20kN acting at A in a vertically upward direction. Determine the tension in AB, AC and AD.** **06**

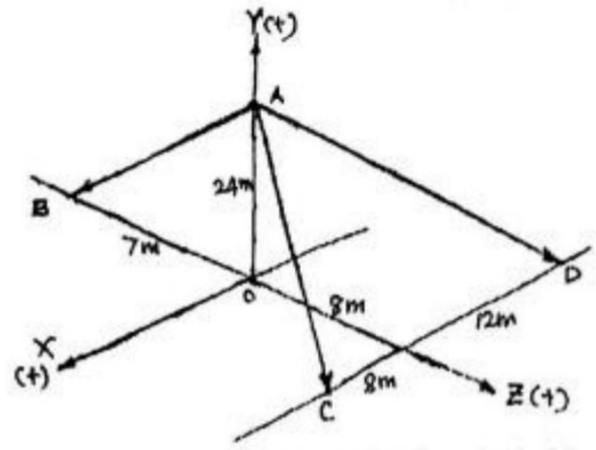

c) **A 50N collar slides without friction along a smooth rod which is kept inclined at 60⁰ to the horizontal. The spring attached to the collar and the support 'C'. The spring is unstreched when the collar is at 'A'(AC is horizontal)Determine the value of spring constant 'K' given the collar has a velocity of 2.5 m/s when it has moved 0.5m along the rod as shown in fig.**

06

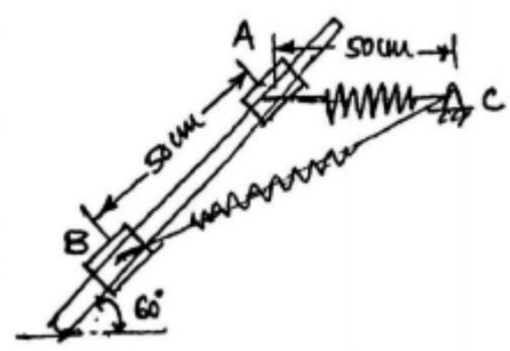

Sol.3 (a)

SHAPE	AREA	X	y	a_x	a_y
	1*1=1	0.5	0.5	0.5	0.5(2)

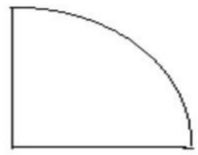	$-\frac{\pi r^2}{4} = -0.442$	0.3	0.3	-0.141	-0.141(2)
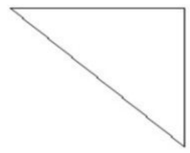	-0.5*0.75*0.75 =-0.28	0.7	0.7	-0.21	-0.21(2)
	∑A=0.278			$\sum a_x$=0.149	$\sum a_y$=0.149

$$\bar{x} = \bar{y} = 0.536m = 536mm$$

Sol.3 (b) A= (0,24,0), B = (0,0, -7), C = (8,0,8), D = (-12,0,8)

$\bar{F}_{AB} = F_{AB} * \frac{-24\,j-7k}{\sqrt{(24^2+7^2)}}$ = (-0.96j-0.28k) F_{AB}

$\bar{F}_{AC} = F_{AC} * \frac{8i-24\,j+8k}{\sqrt{(8^2+24^2+8^2)}}$ = (-3i - 0.91j+0.3k) F_{AC}

$\bar{F}_{AD} = F_{AD} * \frac{-12i-24\,j+8k}{\sqrt{(12^2+24^2+8^2)}}$ = (-43i - 0.86j + 0.28k) F_{AD} (2)

$\bar{w} = 10j$

∑Fx = 0, ∑Fy = 0, ∑Fz = 0

$0F_{AB} + 0.3\,F_{AC} - 0.43\,F_{AD} = 0$

$-0.96F_{AB} - 0.91\,F_{AC} - 0.86\,F_{AD} = 0$

$-0.28F_{AB} + 0.3\,F_{AC} + 0.286\,F_{AD} = 0$(2)

F_{AB}= 5.53 N, F_{AC}= 3.10 N, F_{AD}= 2.16 N (2)

Sol.3 (c) $BC^2 = 0.5^2 + 0.5^2 - 2*0.5*0.5*\cos 120$

BC= 0.866 m h= 0.5 sin 60 = 0.433 x=0.866-0.5=0.366 (2)

W.D by gravity + W.D by spring = change in K.E. (1)

$(50*0.433) + 0.5*K\,[0-(0.366^2)] = 0.5*\frac{50}{9,81}*2.5^2 - 0$ (2)

21.65-0.067K = 15.93

K= 85.37 N/m (1)

Q.4 a) A boom AB is supported as shown in fig by a cable runs from 'C' over a small pulley at D. Compute the tension T in cable and reaction at A. Neglect the weight of the boom and size of the pulley. 08

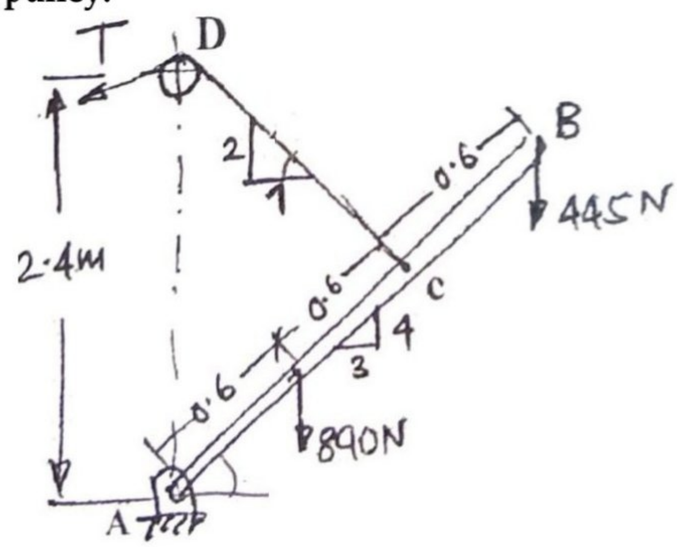

b) **The acceleration of the train starting from rest at any instant is given by the expression $a=\frac{8}{v^2+1}$, where v is the velocity of the train in m/s. Find the velocity of the train when its displacement is 20m and its displacement when its velocity is 64.8 kmph. 06**

c) **Angular velocityof the connector BC is 4 r/s in clockwise direction. What are the angular velocities of crank AB and CD. 06**

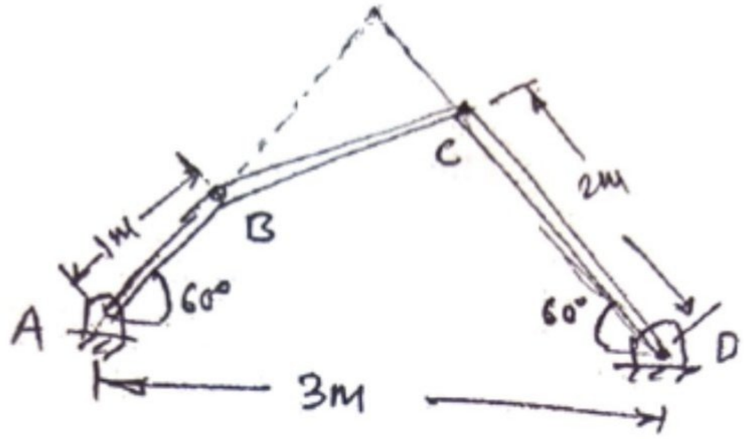

Sol.4 (a)

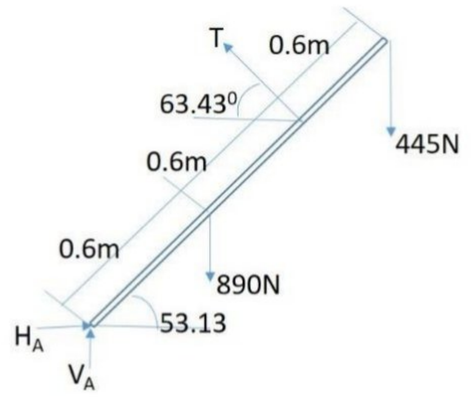

$\sum M_A=0$;

Tcos (63.43) x (0.96) + Tsin (63.43) x (0.72) – 890 x (0.36) - 445(1.08) = 0

T = 746.26N

$\sum F_x = 0$;

H_A - Tcos(63.43) = 0

H_A= 333.8N

$\sum F_Y=0$;

V_A – 890 – 445 + Tsin(63.43)=0

V_A= 667.55N

Sol.4 (b) **$a = v(\frac{dv}{ds})$** = $8/(v^2+1)$

$(v^3 + v)\, dv = 8ds$

Integrating both sides;

$V^4/4 + v^2/2 = 8s + C_1$

When S = 0, v = 0; $C_1 = 0$

$V^4/4 + v^2/2 = 8s$……(i)

When S = 20, v = 4.931m/s……(from equation i)

When v = 64.8km/hr i.e. 18m/s , s = 3300.75m i.e. 3.3km……..(from equation i)

Sol.4 (c)

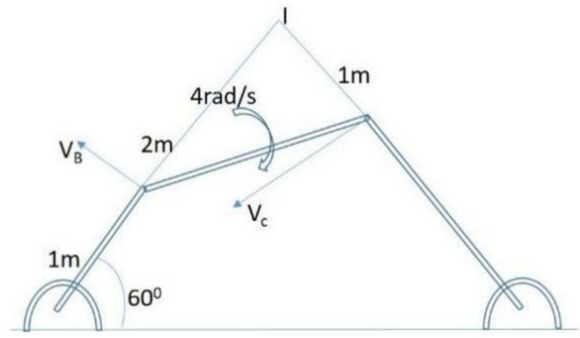

Location of I-centre.

Since, **IB** = 2m and **IC** = 1m;

Therefore, $(\mathbf{V_B/I_B}) = (\mathbf{V_c/I_c}) = \boldsymbol{\omega}_{BC}$

$(V_B / 2) = (V_c / 1) = 4$

$\mathbf{V_B}$ = 8m/s; $\mathbf{V_c}$= 4m/s

Since, $\mathbf{V_B = r_{AB} x \omega_{AB}}$

$8 = 1 \times \omega_{AB}$; therefore $\boldsymbol{\omega}_{AB}$ = 8 rad/sec

$V_C = r_{CD} \times \omega_{CD}$

$4 = 2 \times \omega_{CD}$; therefore $\boldsymbol{\omega}_{CD}$ = 2 rad/sec

Q.5 a) In the truss shown in fig. compute the force in each member. 08

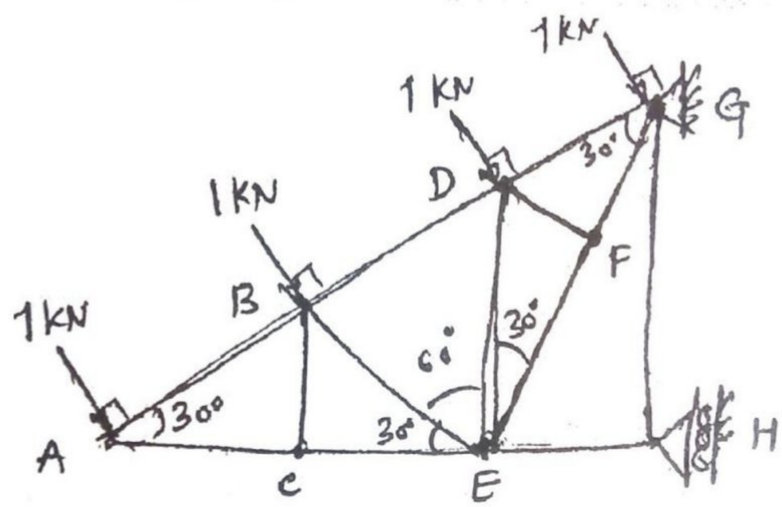

b) Determine the speed at which the basket ball at 'A' must be thrown at an angle of 30^0 if makes it to the basket at B. Also find at what speed it passes through the hoop. 06

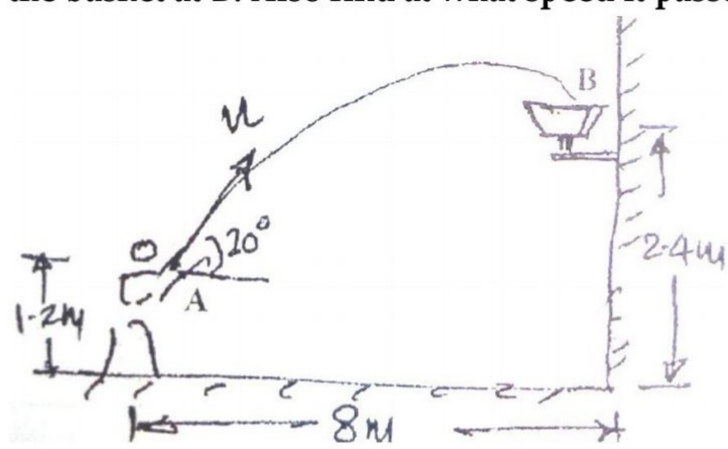

c) Fig. shows a collar B which moves upward with constant velocity of 1.5 m/s. At the instant when θ=50^0 determine (i) the angular velocity of rod pinned at B and freely resting at A against 25^0 sloping ground and (ii) the velocity of end A of the rod. 06

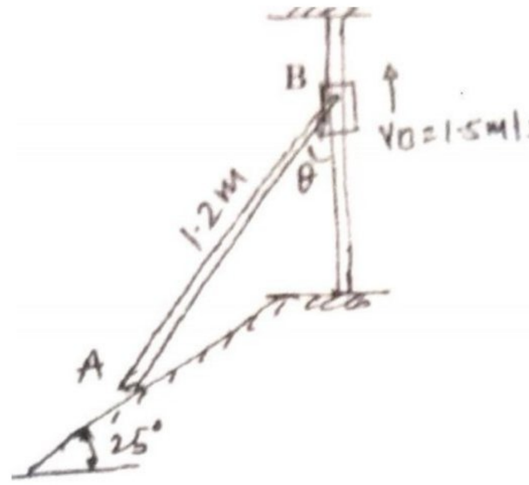

Sol.5 (a) Solving by joint method.

Sr.No	Members	Magnitude in kg	Nature
1	AB	1.732	T
2	AC	2	C
3	BC	0	-
4	BD	2.31	T
5	BE	1.155	C
6	DF	0	-
7	DG	1.732	T
8	DE	1.155	C
9	EF	2	T
10	FD	0	-
11	EH	4	C
12	HG	0	-
13	FG	2	T

Sol.5 (b) $\mathbf{y = x\tan\alpha - \frac{gx^2}{2u^2\cos^2\alpha}}$

$1.2 = 8x\tan30^0 - \frac{9.81*8^2}{2u^2\cos^2 30}$

0n solving $\mathbf{u} = 11.06m/s$

$\mathbf{V_x} = 11.06x\cos30^0 = 9.58m/s$

$\mathbf{V_y^2 = U_y^2 - 2gh}$

$V_y^2 = (11.06sin30)^2 - (2x9.81x1.2)$ $V_y = 2.65m/s$

Since, $\mathbf{v = \sqrt{Vx^2 + Vy^2}} = 9.94m/s$

$\boldsymbol{\theta} = \mathbf{\tan^{-1}(\frac{Vy}{Vx})} = 15.46^0$

Sol.5 (c)

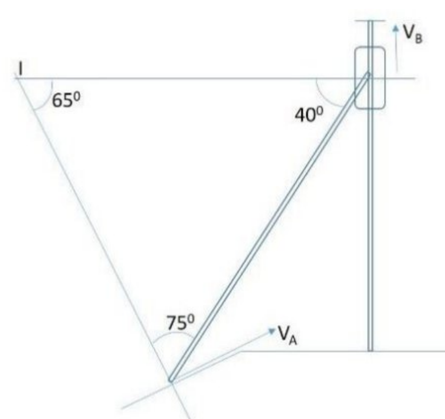

Locating I-centre;

By sine rule; $\frac{IB}{sin75} = \frac{IA}{sin40} = \frac{1.2}{sin65}$

Therefore, **IA** = 0.85 and **IB** = 1.28

$(V_B/I_B) = (V_A/I_A) = \omega_{AB}$

$V_A = 0.996$ m/s

$\omega_{AB} = 1.17$r/s.

Q.6 a) A force of 140kN passes through point C(-6,2,2) and goes to the point B(6,6,8). Calculate moment of force about origin. 04

b) Ref. to fig. if the coefficient of friction is 0.60 for all contact surface and θ=30⁰, what force 'P' applied to the block 'B' acting down and parallel to the incline will start motion and what will be the tension in the cord parallel to inclined plane attached to 'A'. Take W_A= 120N and W_B= 200N. 08

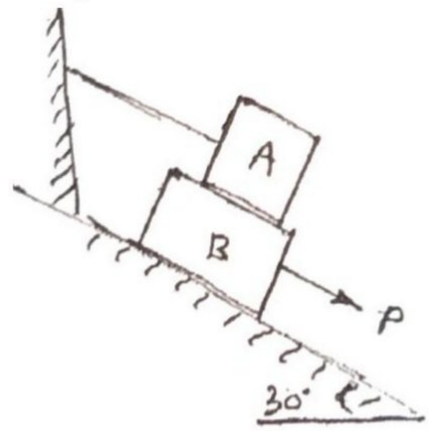

c) Determine the required stiffness 'K' so that the uniform 7kg bar AC is in equilibrium whenθ=30⁰. Due to the guide at B the spring remains vertical and is unstretched when θ=0. Use principle of virtual work. 04

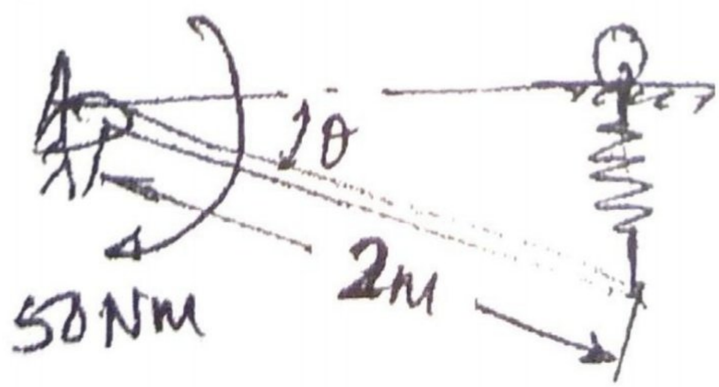

d) The system shown in fig is initially at rest. Neglecting friction determine the force 'P' required if the velocity of the collar B is 5m/s after 2 sec and corresponding tension in the cable. 04

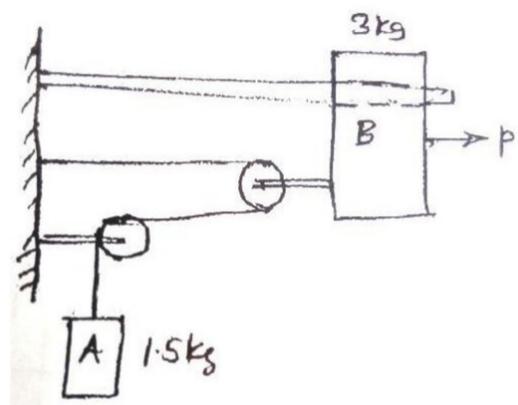

Sol.6 (a) $\bar{F}_{CB} = F_{CB} x \frac{\overline{CB}}{|CB|} = 140(\frac{12i+4j+6k}{\sqrt{12^2+4^2+6^2}}) = 120i + 40j + 60k$

$$M = \bar{r} x \bar{F} = \begin{bmatrix} i & j & k \\ -6 & 2 & 2 \\ 120 & 40 & 60 \end{bmatrix} = 40i + 600j + 480k$$

Absolute $M = \sqrt{40^2 + 600^2 + 480^2} = 769.4$kN-m.

Sol.6 (b)

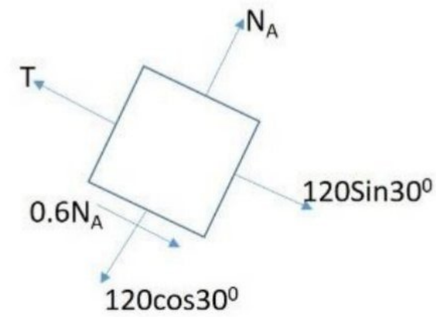

$\sum F_Y = 0$; $N_1 = 103.92$N

$\sum F_x = 0$; $T - 0.6xN_1 - 120x\sin 30^0$

T= 122.35N

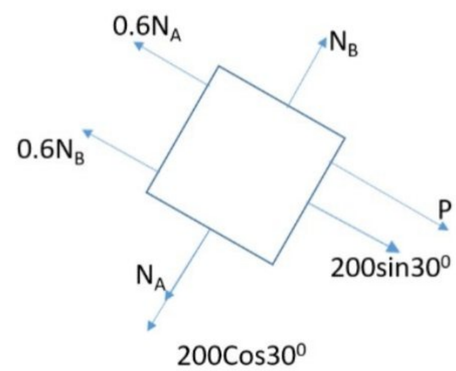

$\sum F_Y = 0$; $N_2 - N_1 - 200x\cos 30^0 = 0$

N_2= 277.125N

$\sum F_x = 0$; $P - 0.6xN_1 - 0.6xN_2 + 200x\sin 30^0 = 0$

P= 128.63N

Sol.6 (c)

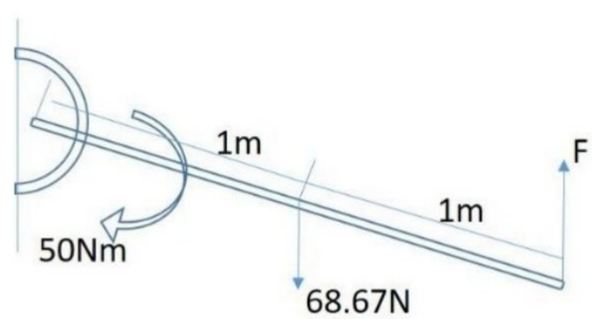

Since, $\sin 30^0 = \frac{x}{2}$; x=1m

$50\,\partial\theta + 68.67x(1\,\partial\theta) - Fx(2\,\partial\theta) = 0$

F = 59.34N

Since, F = kx

k = 59.34N/m.

Sol.6 (d)

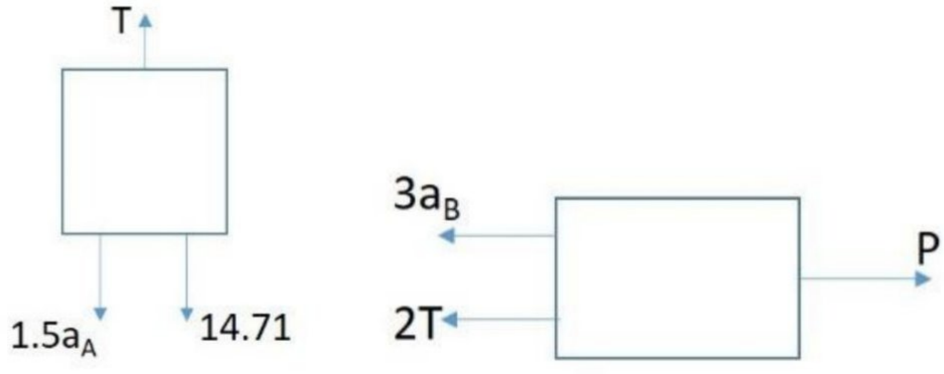

v = u + at; $5 = 0 + a_b \times 2$

$a_b = 2.5\ m/s^2$; $a_a = 2a_b = 5\ m/s^2$

$T \times a - 2T \times b = 0$

$T - 14.71 - 1.5 \times a_a = 0$

Therefore, $T = 22.21N$

$P - 3a_b - 2T = 0$

Therefore; $P = 51.9N$

****

Engineering Mechanics (Sem-I) May-2018

CBCGS

Time : 3 Hours **Total Marks : 80**

N.B. : (1) Question No.1 is compulsory.

(2) Attempt any three questions from remaining Question Nos. 2 to 6.

(3) Assume suitable data wherever required but justify the same.

(4) Figures to the right indicate full marks.

(5) Take $g = 9.81\ m/s^2$

1. (a) A system of four forces acting on a body is shown in fig. Determine their resultant. 4

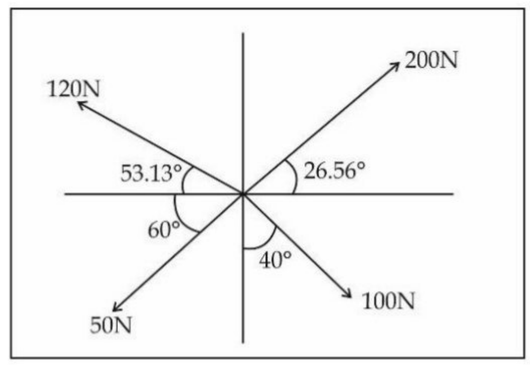

(b) A smooth sphere of wt. 500 N is supported in contact with smooth vertical wall by a string fastened to a point on its surface, the end being attached to a point on the wall. If the length of the string AC is equal to the radius of sphere OC, determine the tension in the string and reaction at the wall. 4

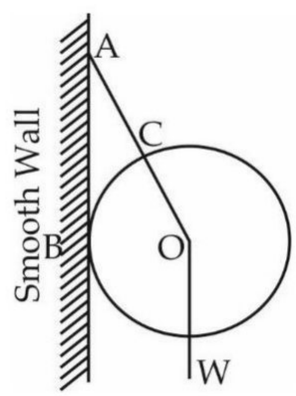

(c) Explain: (i) Laws of friction (ii) Angle of repose 4

(d) A particle starts from rest at t = 0 and travels in one particular direction. Its rectilinear motion is given by the relation $v = (9t^2 - 18t)$ m/s where t is in seconds. Determine the time at which the particle reaches its maximum displacement. Also determine its displacement and acceleration at t = 2 sec. 4

(e) A car travelling at a speed of 25 m/s suddenly applies brakes and comes to stop after skidding 100 m. Determine 4

(i) Time need to stop the car

(ii) Coefficient of friction between the tyre and the road.

2. (a) A cylinder 1.5 m in diameter & weight 1000N is a supported by a beam AB of length 6m & weight 400N as shown in fig. Neglecting friction determine:

(i) Wall reaction at D (ii) Tension in the cable BC (iii) Reaction at hinge support A. 8

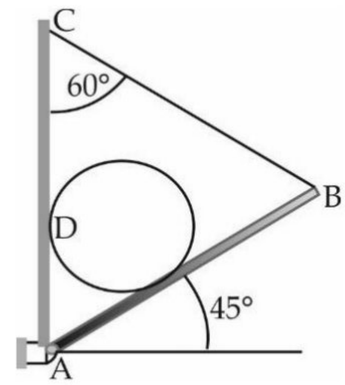

(b) Determine the magnitude, direction and position of the single resultant force. Also replace the given system by a Force-Couple at B. 6

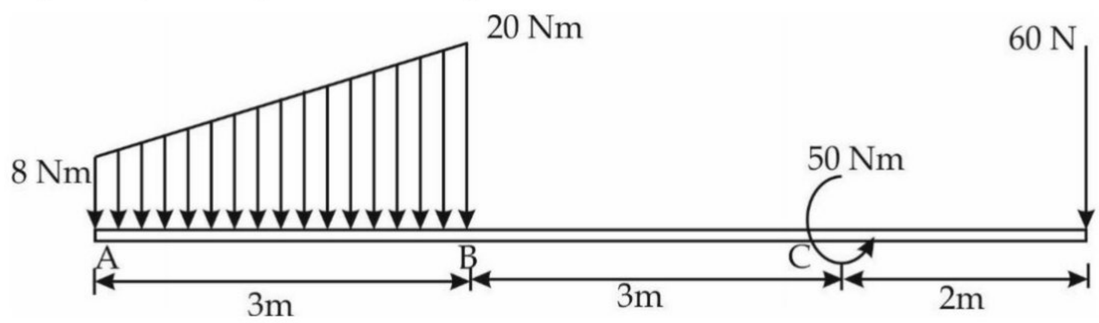

(c) A 2kg ball moving with 0.4 m/s towards right collides with another ball of mass 3kg moving with 0.5 m/s towards left. Determine the velocities of the balls after impact & the corresponding percentage loss of K.E. Coefficient of restitution e = 0.7. 6

3. (a) Determine the Centroid of the shaded area. All dimensions are in mm. 8

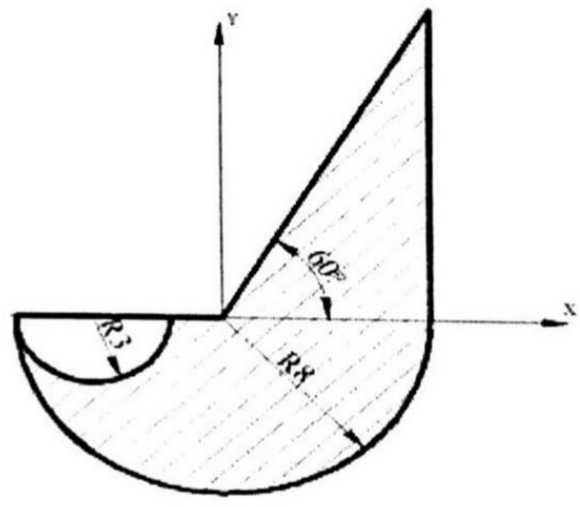

(b) Knowing that the tension in AC is 20kN, determine the required value of tension in cable AB & AD so that resultant of the three forces applied at A is vertical & calculate the resultant. 6

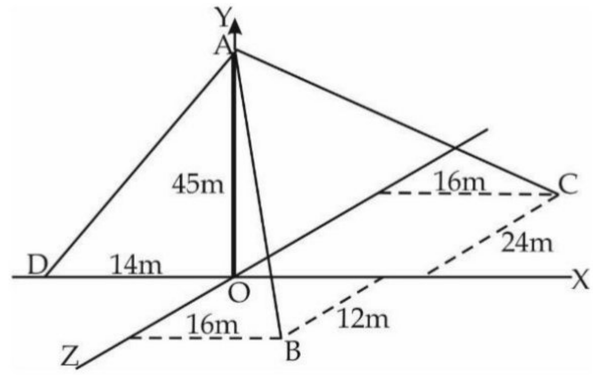

(c) A block with a mass of 15kg is acted upon by a force P = 30N at an angle θ = 30° as shown. Determine the velocity of the block after a displacement of 5m. The block is initially at rest. Take $\mu_s = 0.6$ and $\mu_k = 0.5$. 6

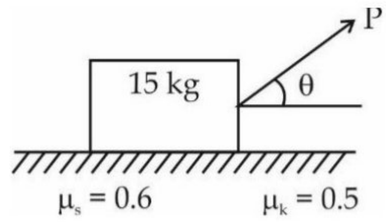

4. (a) Find support reactions at A and B for the beam loaded as shown in figure. A is hinged and B is roller. 8

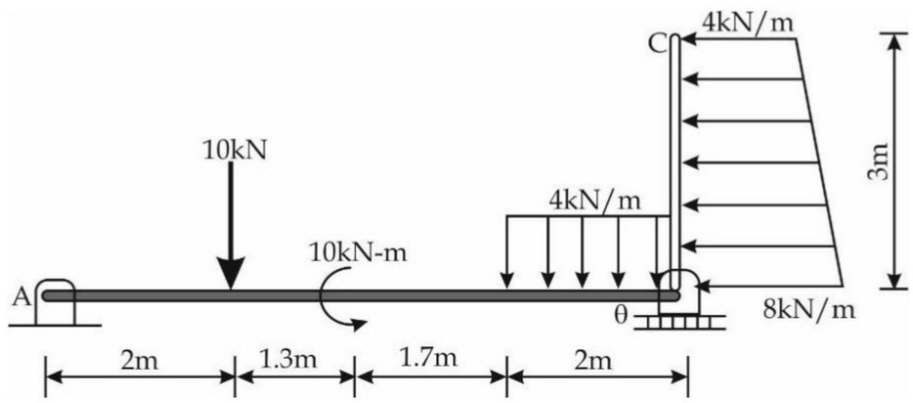

(b) A ball thrown with speed of 12 m/s at an angle of 60° with a building strikes the ground 11.3 m horizontally from the foot of the building as shown. Determine the height of the building. 6

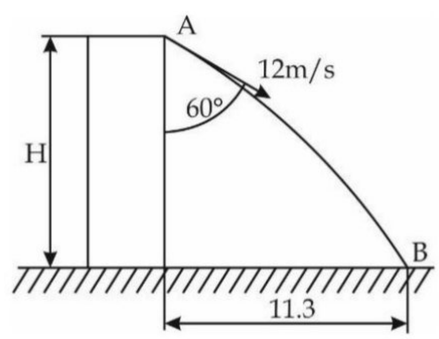

(c) Velocity of point A on rod is 20 m/s at the instant shown in figure. Locate ICR for the rod and determine velocity of point B on the rod. 6

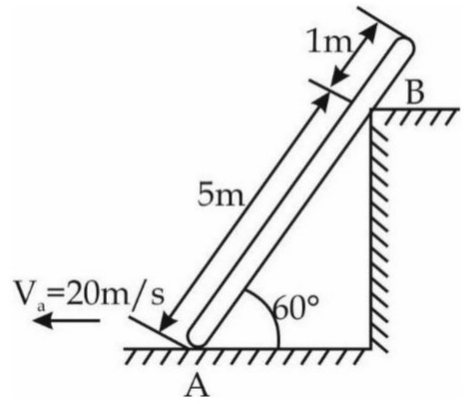

5. (a) Find the magnitude and nature of forces in members AE, CE and CD by method of sections and rest of the members by method of joints. A and B are supported as shown. Length AC= AE = CE = BE = 4m and angle ACB = 90°. 8

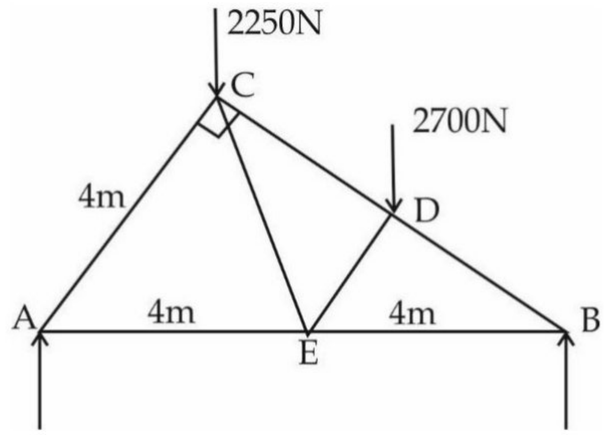

(b) A train leaves station A and attains speed at the rate of 4 m/s² for 6 seconds and then 6 m/s² till it reaches a velocity of 48 m/s. Further the velocity remains constant, then brakes are applied giving the train a constant deceleration stopping it in 6 seconds. If the total running time between the two stations is 40 sec. Plot a-t graph, v-t graph and determine the distance between the two stations. 6

(c) The crank OQ of a slider crank mechanism is rotating at constant speed of 30 rpm clockwise about fixed point O. Determine the velocity of the position P at the given instant. 6

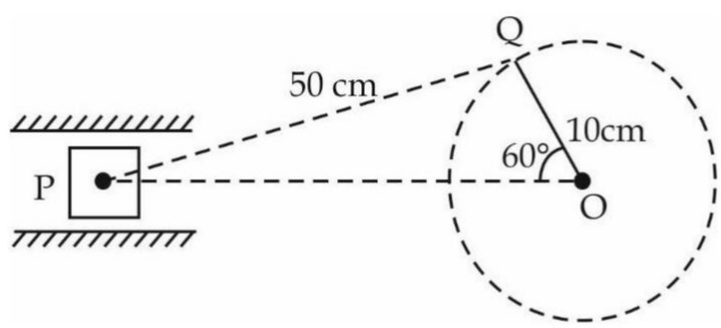

6. (a) What force P must be applied to the weight under 1000 kN block A? The angle of friction at al. 8

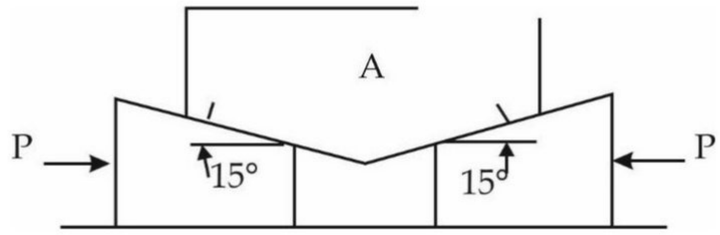

(b) A force of 600N acts along PQ, P (4, 5, –2) and Q (–3, 1, 6) m. Calculate its moment about a point A (3, 2, 0). 4

(c) A car starts from rest and moves along a circular path having a radius of 20m. Its speed increases at a uniform rate of 0.5 m/s^2. Find the time from the start and distance travelled when its resultant acceleration becomes 1.5 m/s^2. 4

(d) Blocks A and B of mass 600kg and 1200kg respectively are connected by a string passing over a smooth pulley. Neglect mass of pulley. If coefficient of kinetic friction between the block A and the inclined surface is 0.2, determine the acceleration of block A and block B. 4

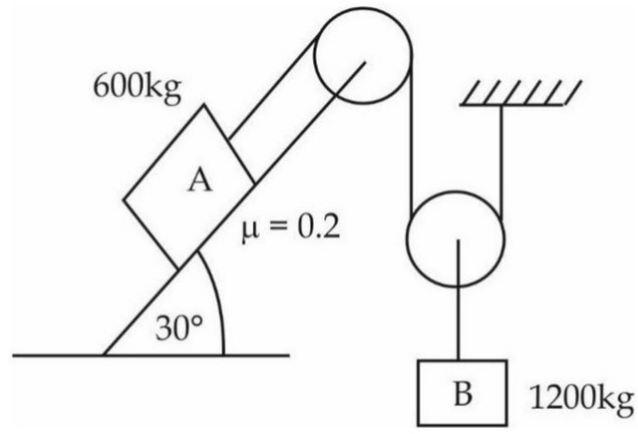

****

Engineering Mechanics (Sem-I) May-2018

Solutions

1. (a) A system of four forces acting on a body is shown in fig. Determine their resultant. 4

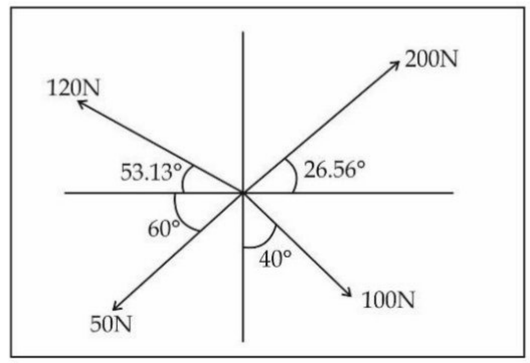

(b) A smooth sphere of wt. 500 N is supported in contact with smooth vertical wall by a string fastened to a point on its surface, the end being attached to a point on the wall. If the length of the string AC is equal to the radius of sphere OC, determine the tension in the string and reaction at the wall. 4

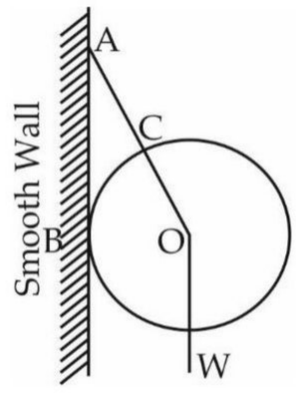

(c) Explain: (i) Laws of friction (ii) Angle of repose 4

(d) A particle starts from rest at t = 0 and travels in one particular direction. Its rectilinear motion is given by the relation v = ($9t^2$ – 18t) m/s where t is in seconds. Determine the time at which the particle reaches its maximum displacement. Also determine its displacement and acceleration at t = 2 sec. 4

(e) A car travelling at a speed of 25 m/s suddenly applies brakes and comes to stop after skidding 100 m. Determine 4

(i) Time need to stop the car

(ii) Coefficient of friction between the tyre and the road.

Sol.1 (a) $\tan^{-1}(1/2) = 26.56^o$
$\tan^{-1}(4/3) = 53.13^o$
Fx= 200cos26.56 -120cos53.13 – 50cos60 +100sin40

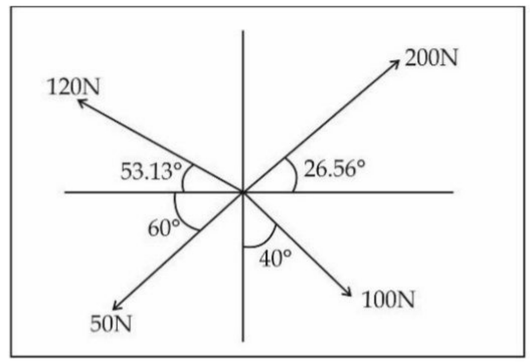

$\sum Fx = 146.17N \rightarrow$

$Fy = 200\sin 26.56 + 120\sin 53.13 - 50\sin 60 - 100\cos 40$

$\sum Fy = 65.52\ N \uparrow$

$R = \sqrt{(\sum Fx^2 + \sum Fy^2)} = 160.18\ N$

$\Theta = \tan^{-1}(65.52/146.17) = 24.14^{\circ}$

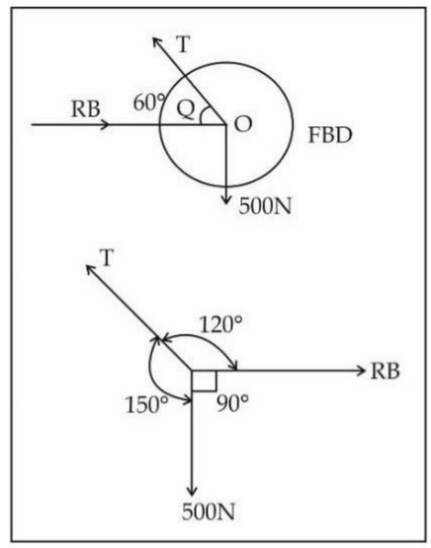

Sol.1 (b) By using Lami's Theorem,

$$\frac{500}{\sin 120} = \frac{T}{\sin 90} = \frac{R}{\sin 150}$$

On solving, **T** = 577.35 N and **R** = 288.67N

Sol.1 (c) Law of friction (Refer module)

Angle of repose (Refer module)

Sol.1 (d) $v = 9t^2 - 18t$

At maximum displacement,

$\frac{dx}{dt} = 0$, therefore v = 0.

Substitute, $0 = 9t^2 - 18t$

$t(9t-18) = 0$

t = 0 and t = 2sec

So, Maximum displacement is when t = 2 sec.

Given, $v = 9t^2 - 18t$

$a = \frac{dv}{dt} = 18t - 18$

at t = 2sec, $a = 18*2 - 18 = 18 m/s^2$

$v = \frac{dx}{dt} = 9t^2 - 18t$

$\int dx = \int (9t2 - 18t)\ dt$

$X = \frac{9t3}{3} - \frac{18t2}{2} + C$

At t = 0sec ; x = 0 , hence C=0

Putting the value of C in the above equation, we get;

$X = 3t^3 - 9t^2$; at t = 2sec x = -12m

1e $v^2 = u^2 + 2as$
$0 = 25^2 + 2*a*100$
Therefore, $a = -30125 m/s^2$
$V = u + at$
$0 = 25 - 3.125*t$
On solving, t = 8sec
$\sum Fy = 0$, N= mg
By D' Alembert Principle, F= ma
$\mu*N = m*a$
$\mu*N = m*a$
$\mu*N = m*a$
$\mu*N = m*a$
$\mu*N = m*a$
$\mu*m*g = m*a$
$\mu = a/g = \frac{3.125}{9.8}$, hence $\mu = 0.3185$.

2. (a) A cylinder 1.5 m in diameter & weight 1000N is a supported by a beam AB of length 6m & weight 400N as shown in fig. Neglecting friction determine: 8

(i) Wall reaction at D (ii) Tension in the cable BC (iii) Reaction at hinge support A.

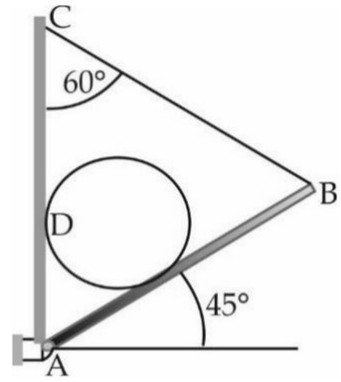

(b) Determine the magnitude, direction and position of the single resultant force. Also replace the given system by a Force-Couple at B. 6

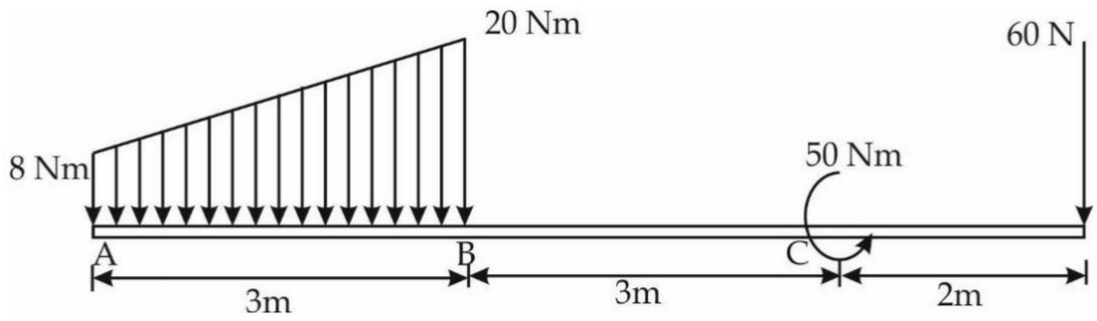

(c) A 2kg ball moving with 0.4 m/s towards right collides with another ball of mass 3kg moving with 0.5 m/s towards left. Determine the velocities of the balls after impact & the corresponding percentage loss of K.E. Coefficient of restitution e = 0.7. 6

Sol.2 (a) From geometry
$\tan 22.5^o = OP/AP = 0.75/AP$

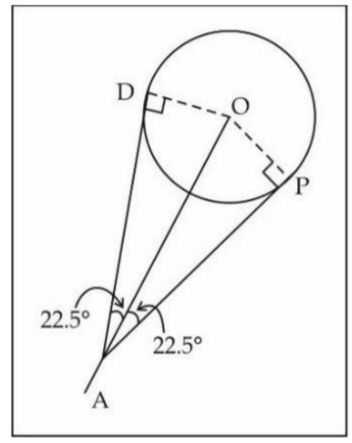

On solving, AP = 1.81m

Using Lami's Theorem,

$$\frac{1000}{sin135} = \frac{RD}{sin135} = \frac{Rp}{sin90}$$

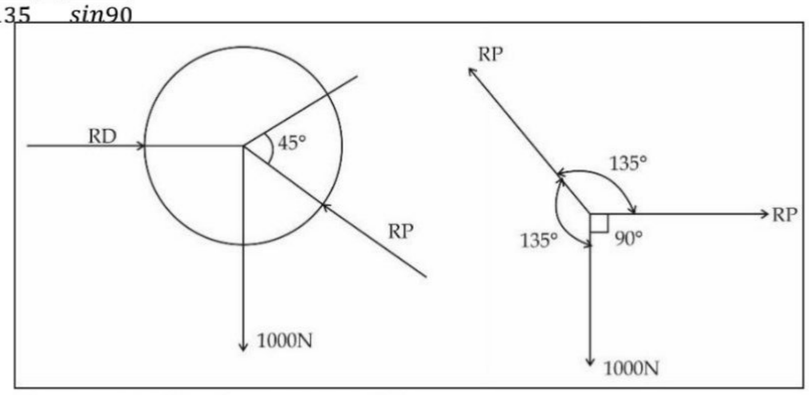

On solving, R_D = 1000N R_p = 1414.2N

FBD of rod AB

$\sum M_A = 0.$

$-R_p * 1.81 - 400*3\cos45 + T*\sin75*6 = 0$

T = 588.08N

$\sum F_x = 0,$

$H_A + R_p \cos45 - T\cos30 = 0$

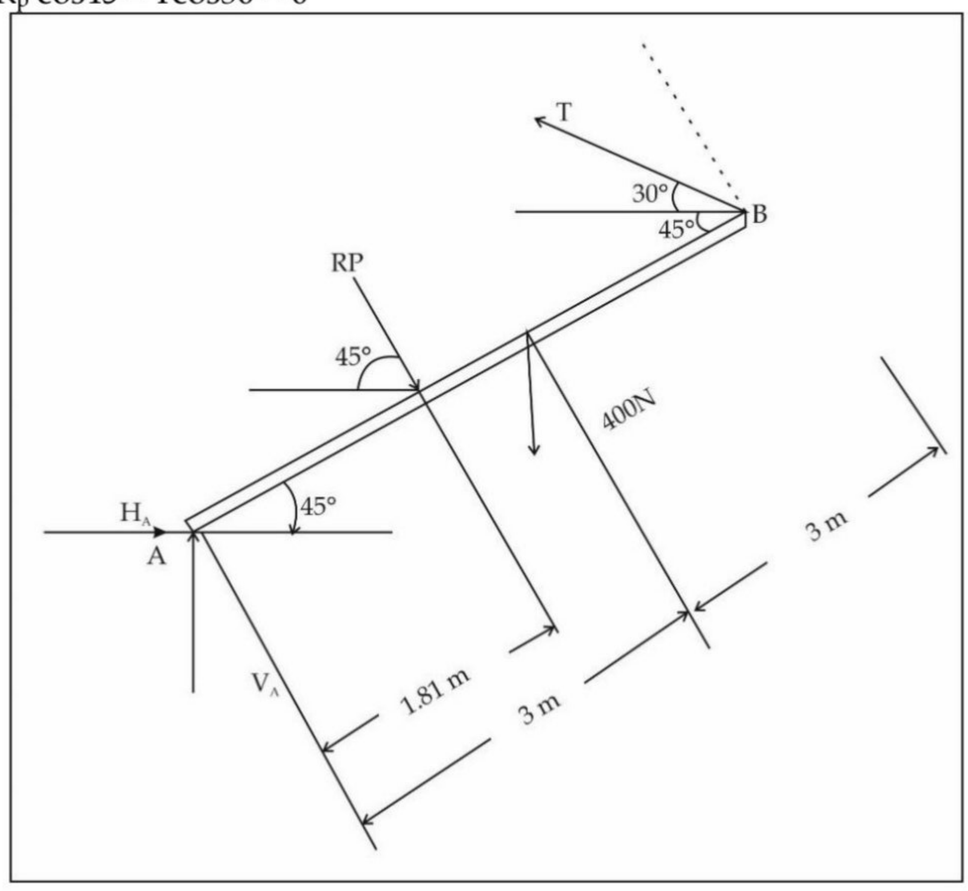

$H_A = -490.7N$
$\sum F_Y = 0,$
$V_A - R_p\sin45 - 400 + T\sin30 = 0$
$V_A = 1105.9N \uparrow$
$R_A = \sqrt{(490.7^2 + 1105.9^2)} = 1209.9N$
$\Theta = \tan^{-1} (1105.9/490.7) = 66.07^o$

Sol.2 (b) UDL = 8*3 = 24N
UVL = 0.5*12*3 = 18N

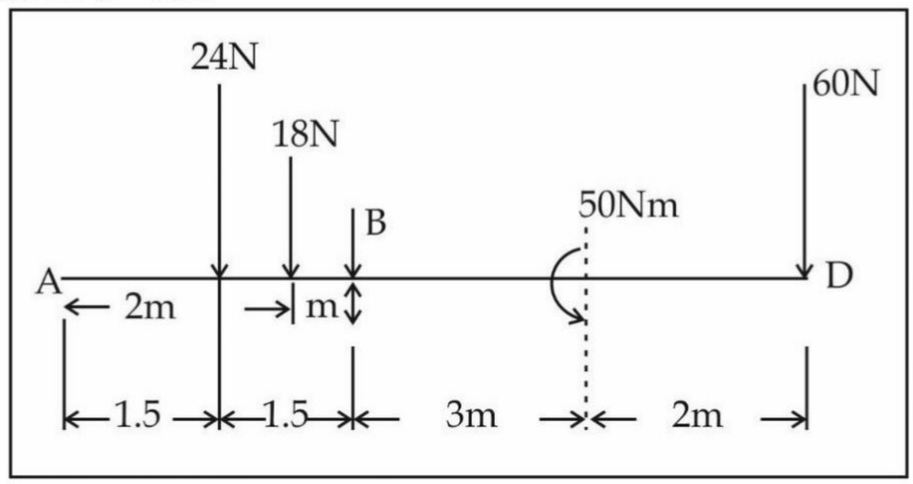

R = 24+18+60 = 102N (downward)
$\sum M_A$ = -24*15 -18*2 -60*8 +50 =502Nm (clockwise)
Since, R*x = $\sum M_A$
102*x = 502
X = 502/102 = 4.92m to the right hand side of A.
$\sum M_B$ = 24*1.5 +18*1 -60*5 +50 = 196Nm (clockwise)

Sol.2 (c) Let U_1 and U_2 be the initial velocities and V1& V2 be the final velocities of the body.
$M_1U_1 + M_2U_2 = M_1V_1 + M_2V_2$
$2*0.4 + 3*-0.5 = M_1V_1 + M_2V_2$

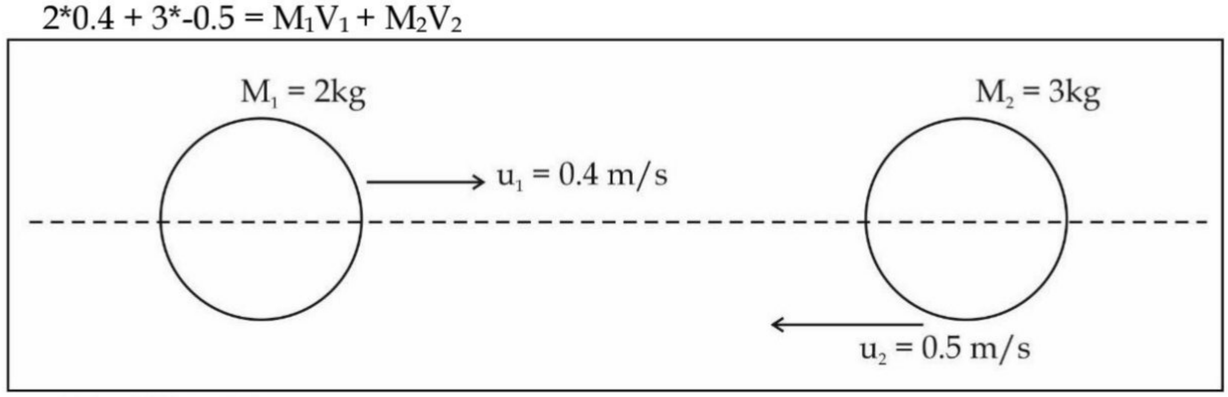

$-0.7 = 2V_1 + 3V_2$
$e = \frac{-V1 + V2}{U1 - U2} = 0.7 = \frac{-V1 + V2}{0.4+0.5}$
$-V_1 + V_2 = 0.63$
Aftersolving, V_1 = -0.158m/s and V_2 = 0.112m/s
Initial K.E = $0.5M_1U_1^2 + 0.5M_2U_2^2$.
$0.5*2*0.4^2 + 0.5*3*0.5^2 = 0.535$ J
Final K.E = $0.5M_1V_1^2 + 0.5M_2V_2^2$
$0.5*2*0.518^2 + 0.5*3*0.112^2 = 0.287$ J
Loss of K.E = 0.535 – 0.287 = 0.248 J
% loss of KE = $\frac{0.248}{0.535}*100 = 46.35\%$

3. (a) **Determine the Centroid of the shaded area. All dimensions are in mm.** **8**

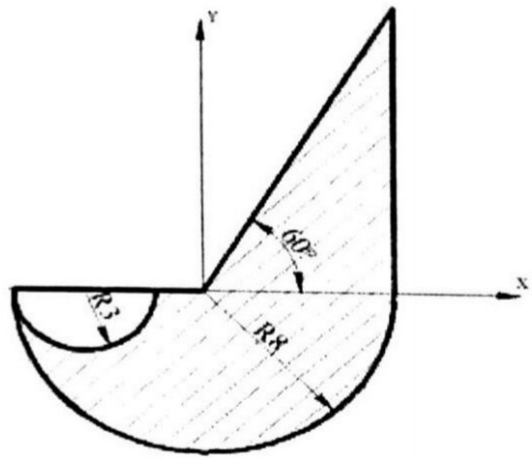

(b) **Knowing that the tension in AC is 20kN, determine the required value of tension in cable AB & AD so that resultant of the three forces applied at A is vertical & calculate the resultant.** **6**

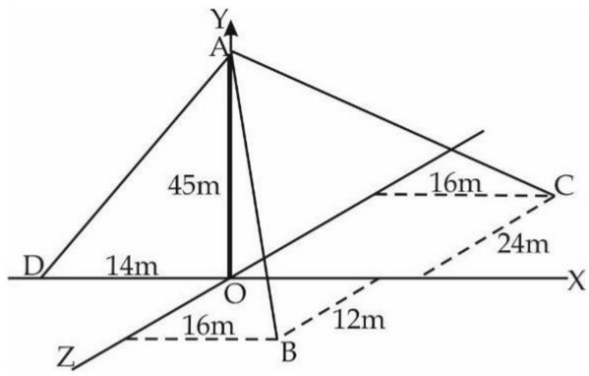

(c) **A block with a mass of 15kg is acted upon by a force P = 30N at an angle θ = 30° as shown. Determine the velocity of the block after a displacement of 5m. The block is initially at rest. Take μ_s = 0.6 and μ_k = 0.5.** **6**

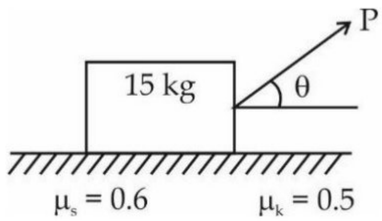

Sol.3 (a) $\tan 60^o = h/r$

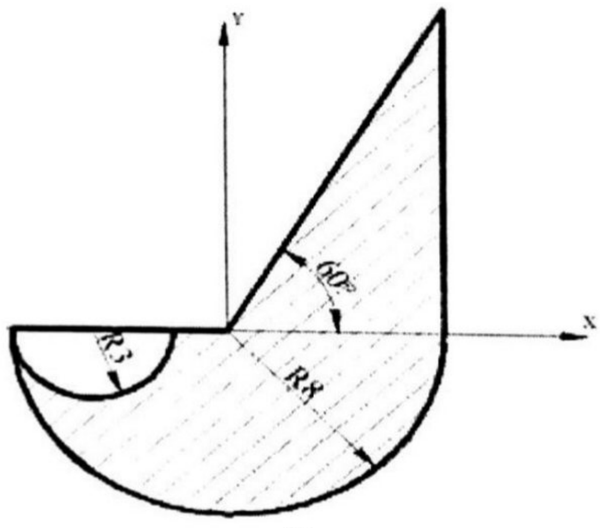

Since R is 8mm, therefore h= Rtan60°
h= 13.856mm

Shapes	Area (A) mm²	X mm	Y mm	AX mm³	AY mm³
Triangle	0.5*8*13.856 = 55.45	2*8/3 = 5.33	13.856/3 =4.618	295.44	255.97
Semicirc	0.5*3.14*8*8 = 100.53	0	-(4R/3∏) = -3.395	0	-341.3
Semicirc	0.5*3.14*3*3 = 14.137	-5	-(4R/3∏) = -1.273	70.685	18
	∑a = 141.823			∑ax = 366.125	∑ay = -67.325

$X = \frac{\sum ax}{\sum a} = \frac{366.125}{141.823} = 2.581mm$

$Y = \frac{\sum ay}{\sum a} = \frac{-67.325}{141.823} = -0.4747mm$

Sol.3 (b) Co-ordinates are O(0,0,0) , A(0,48,0) , B(16,0,12) , C(16,0,-24) & D(-14,0,0)

R = ∑F;

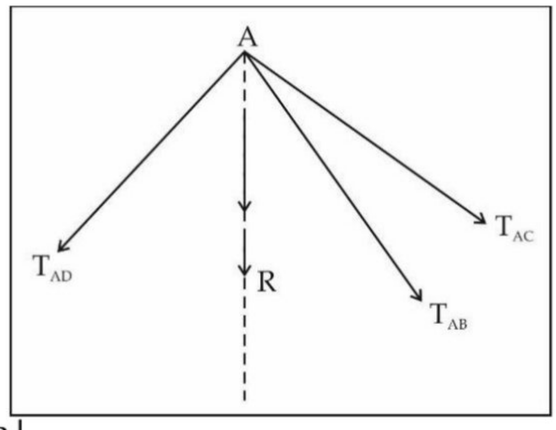

$\overline{T}_{AB} = T_{AB} * \overline{AB} / |AB|$

$\overline{T}_{AB} = T_{AB} * (16i-48j+12k)/\sqrt{\{(16*16)+(48*48)+(12*12)\}}$

$\overline{T}_{AB} = T_{AB}\,(16i-48j+12k)/52 = T_{AB}\,(0.307i - 0.923j + 0.23k)$

$\overline{T}_{AC} = T_{AC} * \overline{AC} / |AC|$

$\overline{T}_{AC} = T_{AC} * (16i-48j-24k)/\sqrt{\{(16*16)+(48*48)+(24*24)\}}$

$\overline{T}_{AC} = 20\,(16i-48j-24k)/56 = (5.71i - 17.14j - 8.57k)$

$\overline{T}_{AD} = T_{AD} * \overline{AD} / |AD|$

$\overline{T}_{AD} = T_{AD} * (-14i-48j)/\sqrt{\{(14*14)+(48*48)\}}$

$\overline{T}_{AD} = T_{AD}\,(-0.28i-0.96j)$

$\overline{R} = -R_J$

$\sum F_X = 0;\ \sum F_Y = R;\ \sum F_Z = 0;$

$\sum F_X = 0;\ 0.307T_{AB} + 5.71 - 0.28T_{AD} = 0$

$\sum F_Z = 0;\ 0.23T_{AB} - 8.57 = 0$

On solving, T_{AB} = 37.26kN and T_{AD} =61.25kN

$\sum F_Y = (0.923T_{AB} + 17.14 + 0.96T_{AD}) = 110.33$

Therefore, $\overline{R} = -110.33j$

Sol.3 (c) $\sum F_Y = 0;$

$N_A + 30\sin30 - 15*9.81 = 0$

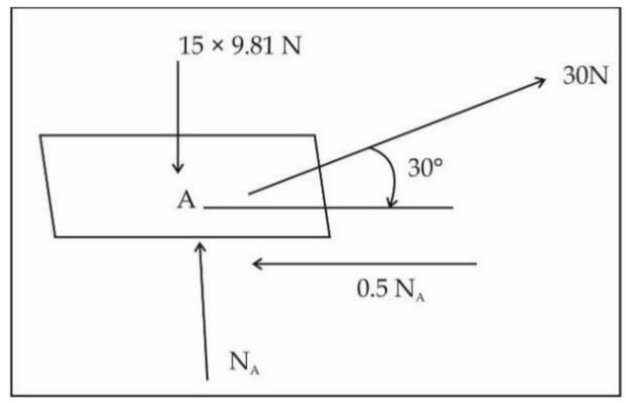

N_A = 132.15N

According to Work Energy principle, W.D = change in KE

$(30\cos30 - 0.5N_A) * 5 = 0.5*mV^2 - 0$

Motion is not possible as 0.5 N_A is greater than $30\cos30^0$. The block will remain at rest only with the given conditions.

4. (a) Find support reactions at A and B for the beam loaded as shown in figure. A is hinged and B is roller. 8

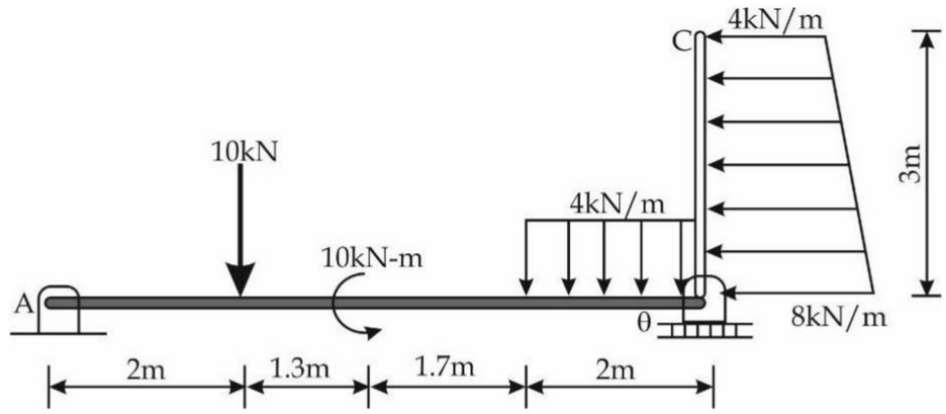

(b) A ball thrown with speed of 12 m/s at an angle of 60° with a building strikes the ground 11.3 m horizontally from the foot of the building as shown. Determine the height of the building. 6

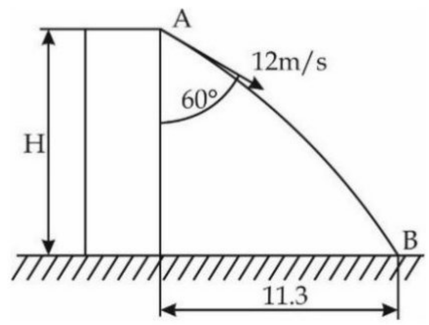

(c) Velocity of point A on rod is 20 m/s at the instant shown in figure. Locate ICR for the rod and determine velocity of point B on the rod. 6

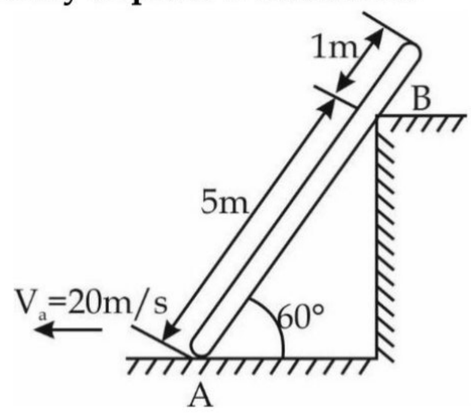

Sol.4 (a) $\sum M_A = 0$; $-10*2 + 10 - 8*6 + 6*1 + 12*1.5 + 7*R_B = 0$

On solving $R_B = 4.875N\uparrow$

$\sum F_X = 0$; $H_A - 12 - 6 = 0$; $H_A = 18kN\rightarrow$

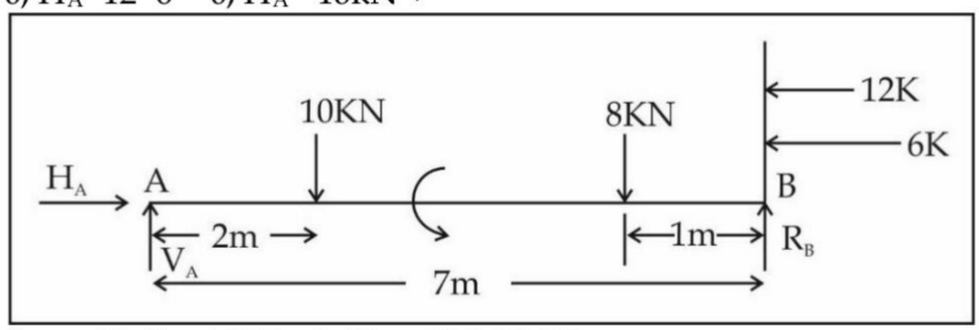

$\sum F_Y = 0$; $v_A - 12 - 8 + 4.857 = 0$; $V_A = 13.142kN\uparrow$

Sol.4 (b) For projectile motion;

U = 12m/s; $\alpha = -30^o$; y = -H and x = 11.3

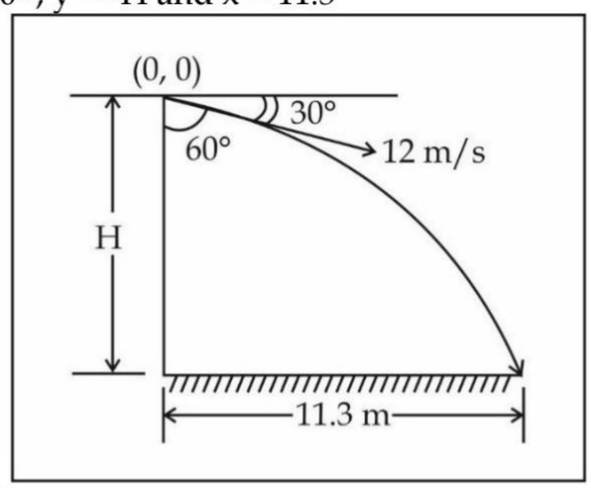

$$Y = x \tan \alpha - \frac{gx^2}{2(u \cos \alpha)^2}$$

$$-H = 11.3 \tan -30 - \frac{9.81*11.3^2}{2(12 \cos 30)^2}$$

H = 12.32m

Sol.4 (c) Locate I as for ICR for the rod AB

In I ΔAB, sin60 = 5/IA , tan60 = 5/IB

IA = 5.773m ; IB = 2.886m

$V_A = IA * \omega_{AB}$; $\omega_{AB} = 3.464$ rad/sec (clockwise)

$V_B = IB * \omega_{AB}$; $V_B = 10$m/s

5. (a) Find the magnitude and nature of forces in members AE, CE and CD by method of sections and rest of the members by method of joints. A and B are supported as shown. Length AC= AE = CE = BE = 4m and angle ACB = 90°. 8

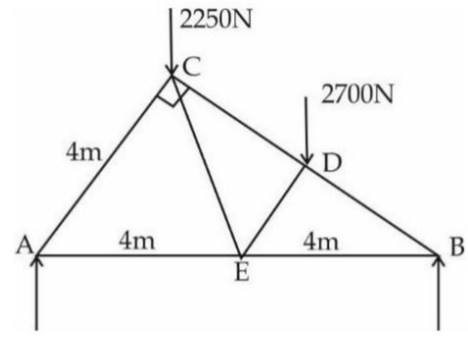

(b) **A train leaves station A and attains speed at the rate of 4 m/s² for 6 seconds and then 6 m/s² till it reaches a velocity of 48 m/s. Further the velocity remains constant, then brakes are applied giving the train a constant deceleration stopping it in 6 seconds. If the total running time between the two stations is 40 sec. Plot a-t graph, v-t graph and determine the distance between the two stations.** **6**

(c) **The crank OQ of a slider crank mechanism is rotating at constant speed of 30 rpm clockwise about fixed point O. Determine the velocity of the position P at the given instant.** **6**

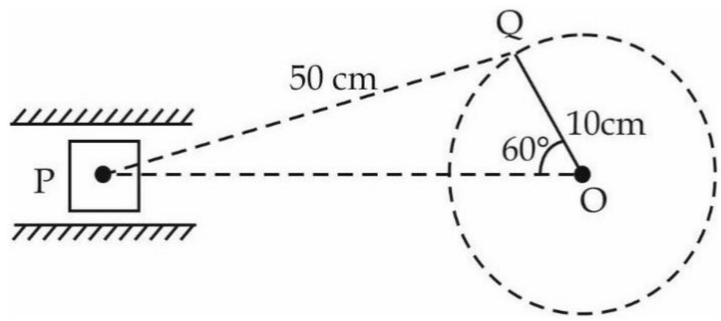

Sol.5 (a) No. of joints= 5
No. of members = 7

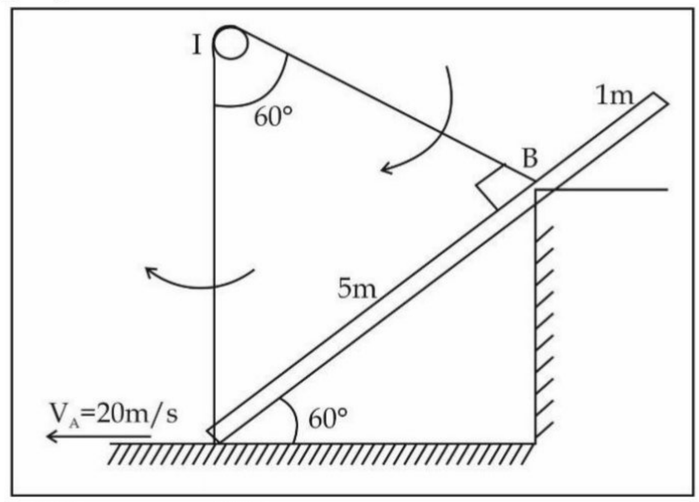

Perfect truss condition = m= 2j-3
Given truss is perfect.
$\sum M_A = 0$; $R_B * 8 = 2250*2 + 2700*5$
R_B= 2250N and R_A=2700N
Solving by joint method,

Members	Magnitude in N	Nature
BD	4500	C
BE	3897	T
CD	3150	C
DE	2338	C
AC	3117.7	C
CE	2338	T
AE	1558.85	T

Sol.5 (b) $a = 4m/s^2$ for $0<t<6$, drawing AB in v-t graph

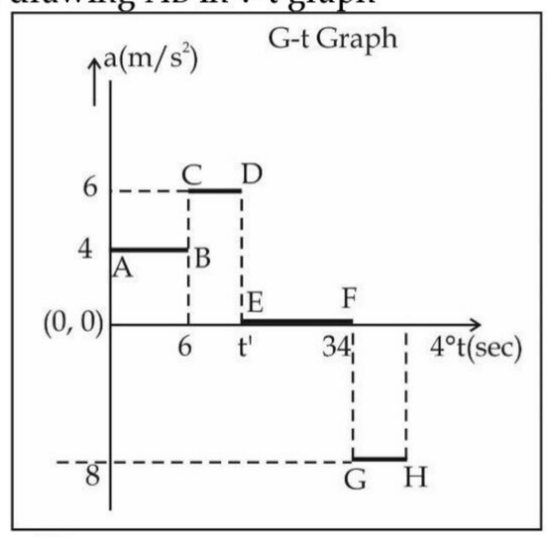

$V_6 = V_o$ + Area under AB

$V_6 = 0 + 6*4 = 24m/s$

Drawing PQ in v-t graph

Let $a=6m/s^2$ for $6<t<t$, drawing CD in v-t graph.

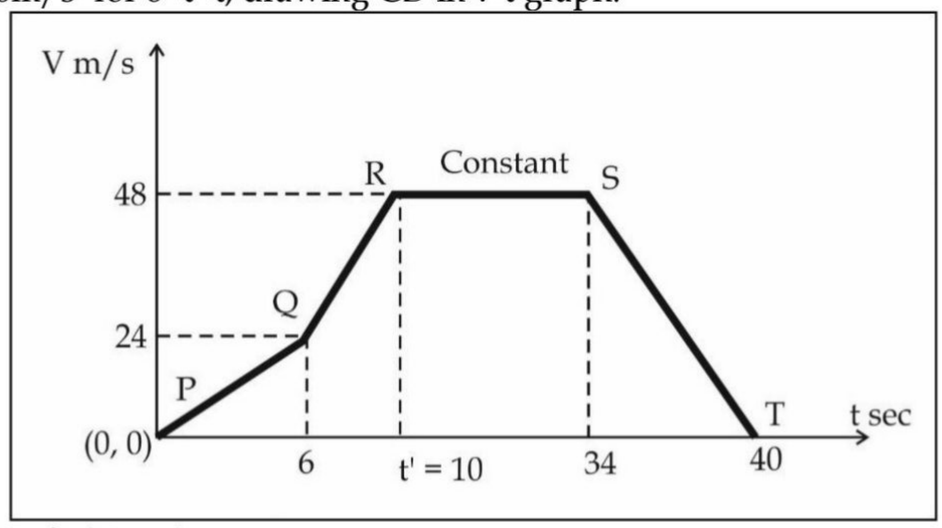

$V_{t'} = 48m/s$ (given)

$V_{t'} = V_6$ + Area under CD

$48 = 24 + (t' - 6)*6$

After solving, $t' = 10sec$.

Now draw QR, velocity remains constant upto t = 34sec and becomes zero at t = 40sec.

Since slope of v-t graph gives acceleration, in $10<t<34$ slope is zero hence acceleration is zero.

Slope of v-t graph from 34 to 40 sec is

Slope = $(y_2 - y_1)/ (x_2 - x_1)$

Slope = $\frac{0-48}{40-34} = -8$

$A_{34\text{-}40} = -8m/s^2$.

Distance between two stations= Area under v-t graph

Distance = (0.5*6*24) +(24*4) + (0.5*4*24) + (24*48) + (0.5*6*48)

Distance = 1512m

Sol.5 (c) In triangle PQR,

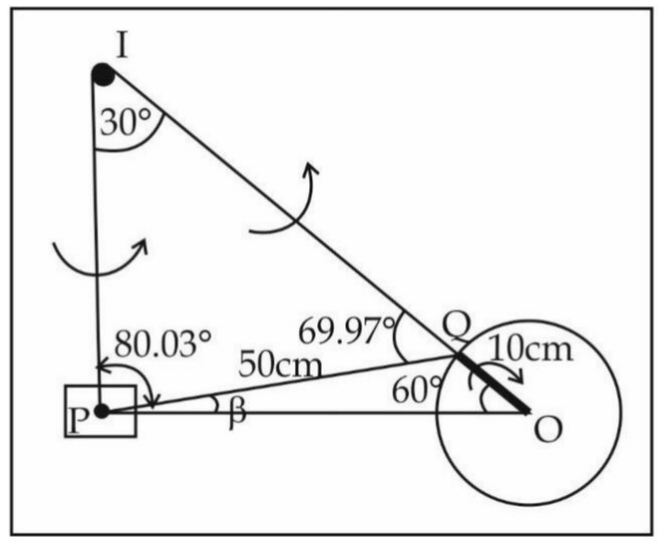

Using triangle law,

$\frac{50}{sin60} = \frac{50}{sin\beta} = \beta = 9.97^0$

Locate I for PQ and determine the angles in triangle IPQ.

Now, $\frac{IP}{sin69.97} = \frac{50}{sin30} = \frac{IQ}{sin80.03}$

On solving, IP= 0.9395m and IQ = 0.9849m

ω_{OQ} = 30*2*3.14/60 = 3.14 rad/s

Since v = r*ω, therefore v_Q = 0.1*3.14 = 0.314m/s.

$V_Q = IQ*\omega_{PQ} = \omega_{PQ} = \frac{0.314}{0.985}$ = 0.318 rad/sec (anticlockwise)

$V_p = IP*\omega_{PQ}$ = 0.939*0.318 = 0.298m/s

6. (a) What force P must be applied to the weight under 1000 kN block A? The angle of friction at al. 8

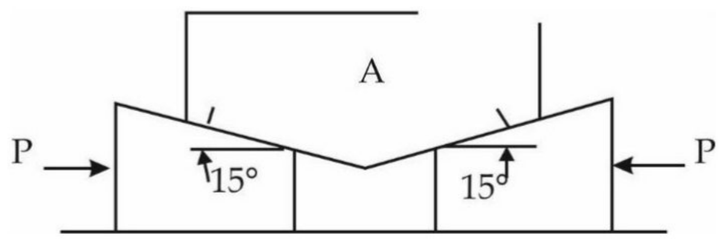

(b) A force of 600N acts along PQ, P (4, 5, –2) and Q (–3, 1, 6) m. Calculate its moment about a point A (3, 2, 0). 4

(c) A car starts from rest and moves along a circular path having a radius of 20m. Its speed increases at a uniform rate of 0.5 m/s^2. Find the time from the start and distance travelled when its resultant acceleration becomes 1.5 m/s^2. 4

(d) Blocks A and B of mass 600kg and 1200kg respectively are connected by a string passing over a smooth pulley. Neglect mass of pulley. If coefficient of kinetic friction between the block A and the inclined surface is 0.2, determine the acceleration of block A and block B. 4

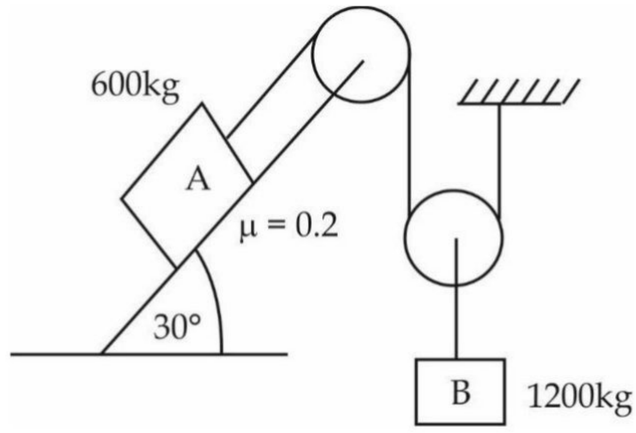

Sol.6 (a) Angle of friction is 10°

For block A; By Lami's theorem

$\frac{1000}{sin50} = \frac{R2}{sin155}$, so $R_2 = 551.69kN$

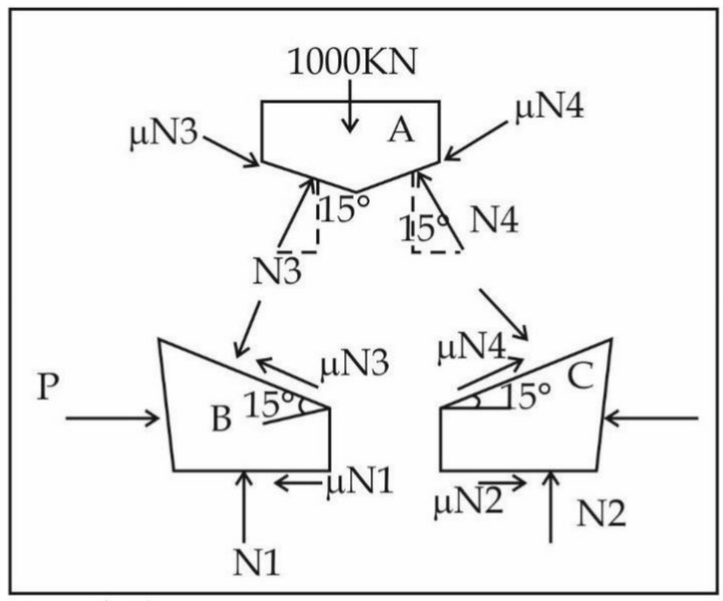

For block B; By Lami's theorem

$\frac{P}{sin145} = \frac{R2}{sin100} = \frac{R1}{sin115}$; P=321.32kN and R_1 = 507.71kN.

Sol.6 (b) $\bar{F}_{PQ} = 600 * \overline{PQ} / |PQ|$

$\bar{F}_{PQ} = 600 * (-7i-4j+8k)/\sqrt{\{(7*7)+(4*4)+(8*8)\}} =$

$\bar{F}_{PQ} = 52.8*(-7i-4j+8k)$

$$\bar{M}_A = \begin{matrix} i & j & k \\ xp - xA & yp - yA & zp - zA \\ Fx & Fy & Fz \end{matrix}$$

$$\bar{M}_A = 52.8 \begin{vmatrix} i & j & k \\ 1 & 3 & -2 \\ -7 & -4 & 8 \end{vmatrix}$$

$\bar{M}_A = 52.8[i(24-8) - j(8-14) + k(-4+21)]$

$\bar{M}_A = 52.8[16i + 6j + 17k]Nm$

$\bar{M}_A = [844.8i + 316.8j + 897.6k]$ Nm

Sol.6 (c) Given: $a_t = 0.5m/s^2$

At A, total acceleration is $1.5m/s^2$

Therefore, $a_n = \sqrt{(a\ total^2 - at^2)} = 1.414m/s^2$

Since $a_n = V^2/r$; so $V = \sqrt{(a * r)}$

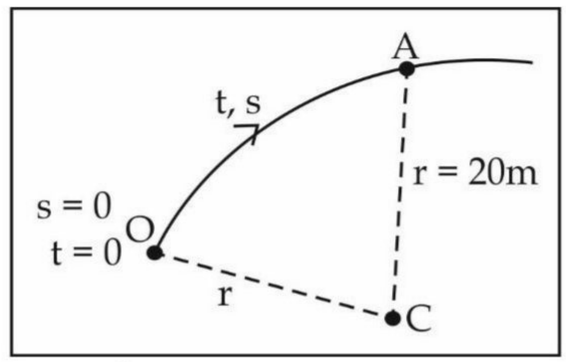

$V = \sqrt{(20 * 1.414)} = 5.318 m/s$

$V = u + a_t * t$ along the curve.

$5.318 = 0 + 0.5 * t$

$T = 10.636 sec.$

$S = u*t + 0.5\ a * t^2$

$S = 0.5*0.5*10.63^2 = 28.28m$

Sol.6 (d) From fig it is clear that $a_A = 2a_B$ and let $a_B = a$.

$N_A = 600*9.81*\cos 60^0 = 2943N.$

By D' Alembert principle,

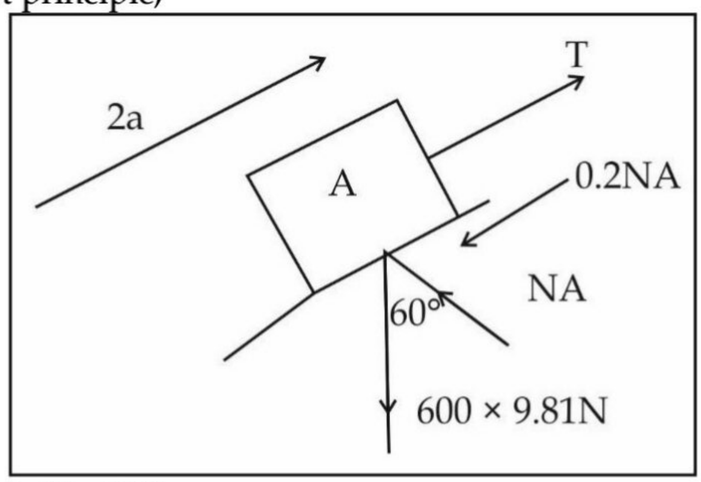

$\sum F = T - 0.2N_A - 600*9.81*\sin 60 = 60*2a$

$T - 1200a = 5686$

$12000*9.81 - 2T = 1200a$

$2T + 1200a = 11772$

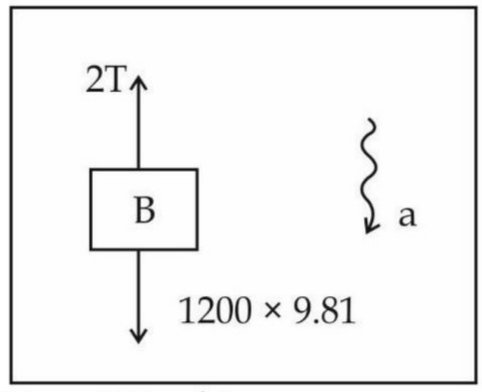

After solving, $T = 5819N$; $a = 0.11 m/s^2$

Therefore, $a_A = 0.22 m/s^2$ and $a_B = 0.11 m/s^2$