Downloaded From : www.EasyEngineering.net

NEW AGE

Basic Concepts of Electrical Engineering

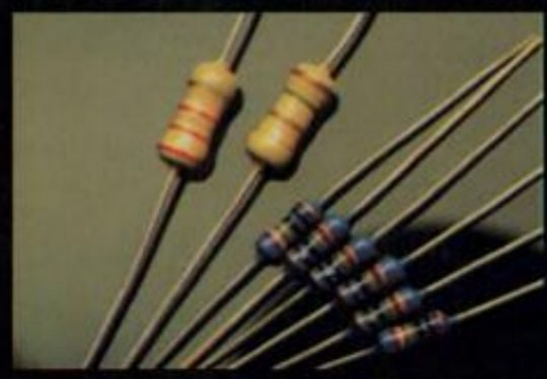

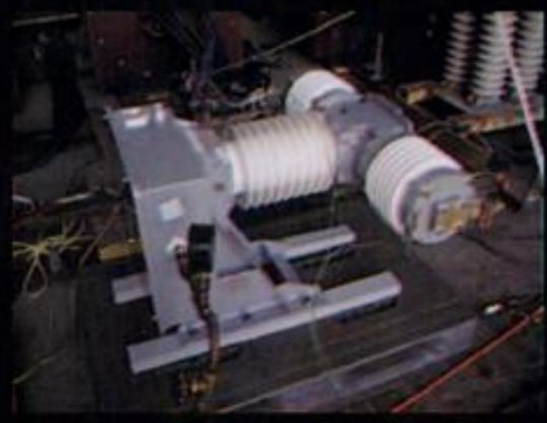

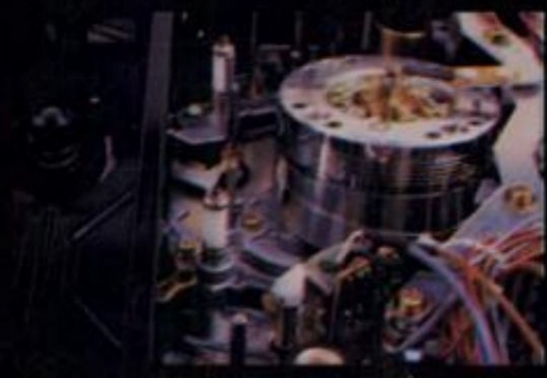

Kuldeep Sahay
Shivendra Pathak

NEW AGE INTERNATIONAL PUBLISHERS

Downloaded From : www.EasyEngineering.net

Downloaded From : www.EasyEngineering.net

Contents

Preface *(vii)*

UNIT I

1. Introduction 1

Electric Charge and Electric Current 1
Direction of Current 2
Coulomb's Law 2
Concept of Potential and Potential Difference 3
Electromotive Force of a Source 3
Voltage Drop 4
Reference Polarity 4
The Basic Circuit 4
Ohm's Law 4
Kirchhoff's Laws 5
Power 6
Energy 6
Ampere's Law 6
Resistance Parameter 7
Inductance Parameter 7
Capacitance Parameter 9
Electrical Parameters 10
Active Elements 11
Voltage Source 11
Current Source 11
Source Conversion 11
Passive Elements 12

2. Basic Concepts of Network Analysis and Theorems for DC Circuits 15

Network Analysis 15
Direct Method 15
Network Reduction Method 15
Kirchhoff's Laws 15
Kirchhoff's Current Law (KCL) 15
Kirchhoff's Voltage Law (KVL) 16
Cramer's Rule 16
Analysis of Network by Kirchhoff's Law 17

Bahan dengan hak cipta
Downloaded From : www.EasyEngineering.net

Downloaded From : www.EasyEngineering.net

Mesh Analysis 18
Star/Delta Transformation 20
Superposition Theorem 20
Thevenin's Theorem 22
Norton's Theorem 23
Maximum Power Transfer Theorem 25
Millman's Theorem 26
Compensation Theorem 28
Tellegen's Theorem 29
Voltage Divider Rule 30
Current Divider Rule 31

UNIT II

3. Electromagnetism 51
Introduction 51
Magnetic Field 51
Magnetic Flux 51
Magnetic Flux Density 52
Direction of Current in a Conductor 52
Magnetic Field due to a Current Carrying Conductor 52
Direction of Magnetic Field/Flux 53
Representing of Uniform Magnetic Field 54
Flux Distribution of a Single Turn Coil 54
Permeability 55
Relation Between Magnetic Flux Density and Field Intensity 56
Force on a Conductor in a Magnetic Field 56
Fleming's Left Hand (or Motor) Rule 57
Electromagnetic Induction 57
Faraday's Laws of Electromagnetic Induction 58
Lenz's Law 58
Fleming's Right Hand Rule 59
Magnitude of Induced e.m.f. in a Coil 59
Dynamically Induced e.m.f. 60
Statically Induced e.m.f. 60
Coefficient of Coupling 63
Inductances of Inductively Coupled Coils Connected in Series 64
4. Magnetic Circuits 71
Introduction 71
Magneto-Motive Force (M.M.F.) 71
Magnetic Field Strength or Intensity 71

Bahan dengan hak cipta
Downloaded From : www.EasyEngineering.net

Downloaded From : www.EasyEngineering.net

Reluctance (S) 72
Laws of Magnetic Circuits 72
Ampere Turns for a Magnetic Circuit 74
Calculations of Ampere Turns 74
Leakage Flux 75
Fringing 75
Calculation of Ampere Turns for the Air Gap 75
Comparison of the Electric and Magnetic Circuit 76
Calculation of Ampere Turns of Series-Parallel Magnetic Circuit 77
Magnetic Curve or B-H Curve 77
Explanation of the Shape of B-H Curve 78
Hysteresis 78
Core Losses or Iron Losses 79
Hysteresis Loss 79
Eddy Current Loss 80
Applicaton of Eddy Current 81
Stacking Factor 81

Unit III

5. Basic Concepts of Alternating Current and Voltage 89
Introduction 89
Generation of Alternating Voltage 89
Cycle 91
Frequency 92
Angular Frequency 92
Instantaneous Value 92
Peak or Maximum Value 92
Peak or Mean Value 93
Determination of Average or Mean Value 93
Determination or r.m.s. Value by Mid-ordinate Method 95
Determination or r.m.s. Value by Method of Integration 96
R.M.S. Value of Sine Wave 96
Form Factor 97
Peak Factor 97
Phase and Phase Difference 98
Phasor Diagram of Alternating Quantity 99
Addition and Subtraction of Phasors 100

6. Single Phase AC Series Circuits 109
Introduction 109
Resistive Circuit Only 109

Materiál chránený autorským právom
Downloaded From : www.EasyEngineering.net

Downloaded From : www.EasyEngineering.net

Power in Resistive Circuit 110
A.C. Circuits Containing Inductance Only 110
Power in Purely Inductance Circuit 112
A.C. Circuit Containing Capacitance Only 112
Power in Purely Capacitance Circuit 113
Series Resistive and Inductive Circuit 113
Power in Series R-L Circuit 114
Apparent Power or Volt Amperes 115
Reactive Power 115
Circuit Containing Resistor and Capacitor 116
Circuit Containing Resistance, Inductance and Capacitance in Series 117

7. Single Phase AC Parallel Circuit 130

Introduction 130
Methods to Solve Parallel Circuits 131
Analytical Method 133
Admittance Method 134
Admittance of a Series Circuit 135
Admittance of a Parallel Circuit 136

8. Electric Resonance 139

Introduction 139
Effect of Frequency Variation in R, L and C Series Circuit 139
Voltage Magnification 142
Bandwidth of Series Resonant Circuit 143
Resonance in Parallel Circuits 145
Current Magnification 147

9. Polyphase Circuits 156

Introduction 156
Generation of a Three-Phase Supply 157
Connection of Three-Phase Supplies 157
Star (γ) Connection 158
Delta (Δ) Connection 158
Line and Phase Voltage and Current in Star Connection 159
Neutral Current 161
Line and Phase Voltage and Current in Delta Connection 161
Phase and Line Currents in Delta Connection 161
Volt-Amperes, Power and Reactive Volt-Ampere in Three Phase System 162
Active Power 162
Reactive Power 163
Measurement of Power 163

Materiál chránený autorským právom
Downloaded From : www.EasyEngineering.net

Downloaded From : www.EasyEngineering.net

UNIT IV

10. Electrical Measurements and Measuring Instruments 175

Introduction 175
Classification of Measuring Instruments 175
Absolute Instrument 175
Secondary Instrument 175
Analog Mode 175
Digital Mode 176
Classification of Instruments 177
Torque in Instruments 177
Merits and Demerits of Moving Iron Instruments 182
Moving Coil Instruments 182
Permanent-Magnet Type Moving Coil Instruments 182
Deflecting Torque 183
Extension of Range of PMMC Instruments 184
Dynometer Type Instruments 185
Deflecting Torque 186
Shunts 187
Instrument Constant 188
Shunts for a.c. Instruments 189
Measurement of Electric Voltage, Current, Power and Energy 189

UNIT V

11. Transformer 203

Introduction 203
Ideal Transformer 205
Real Transformer and its Equivalent Circuit 207
Equivalent Circuit 209
Approximate Equivalent Circuit 211
Phasor Diagram 211
Name Plate Rating 213
Transformers Losses 213
Transformer Testing 214
Transformer Efficiency 217
Voltage Regulation 219

12. Three Phase Induction Machine 231

Introduction 231
Construction of Induction Machine 231

Materiál chránený autorským právom
Downloaded From : www.EasyEngineering.net

Downloaded From : www.EasyEngineering.net

Difference between Cage Rotor and Slip-ring Induction Motor 232
Working Principle of a Three-phase Induction Motor 233
Production of Rotating Field 233
EMF and Current in Induction Motor 235
Frequency of Rotor Voltage and Current 237
Equivalent Circuit of Induction Motor 238
Rotor Circuit Diagram 238
Stator Circuit Diagram 239
Determination of Equivalent Circuit Parameters 240
Phasor Diagram of Induction Motor 241
Three Phase Motor Characteristics 242
Starting of Three Phase Induction Motor 245
Auto Transformer Starting 248
Speed Control of Three Phase Induction Motor 249

13. Single Phase Induction Motor 261

Introduction 261
Single Phase Induction Motor 261
Construction of Single Phase Induction Motor 262
Working Principle of Single Phase Induction Motor 262
Double Revolving Field Theory of Single Phase Induction Motor 263
Starting of Single Phase Induction Motor 264

Unit VI

14. Direct Current Machine (Generators) 270

Introduction 270
Construction of DC Machine 270
Field System 271
Armature 271
Lap Winding 271
Wave Winding 271
Commutator 272
Brushes 272
Basic Magnetic Circuit of DC Generator 272
Excitation of DC Machine 273
Separately-Excited DC Machine 273
Self-Excited Machine 273
Relationship between the Generated Voltage and Excitation Current of d.c. Generators 276
Application of Load 276
E.m.f. Equation of d.c. Machine 279

Copyrighted material
Downloaded From : www.EasyEngineering.net

Downloaded From : www.EasyEngineering.net

Armature reaction 280
Commutation Process 281
Method for Decreasing the Effect of Commutation 282

15. D.C. Machine (Motor) 288

Introduction 288
Counter e.m.f. or Back e.m.f. in d.c. Motors 288
Speed of d.c. Machine 289
Torque Production in d.c. Machine 290
Classification of d.c. Motors 290
Starting of d.c. Motor 293
Generating Mode 295
Speed Control of d.c. Motor 297
Characteristics of d.c. Motors 299
Speed Armature Current Characteristics 300
Speed-Torque Characteristics (Shunt Motor) 300
D.C. Series Motor 301
D.C. Compound Motor 303
Losses in d.c. Machine 305
Efficiency of d.c. Machine 306

Unit VII

16. Synchronous Machines 312

Construction 312
Principle of Operation of Alternators 313
EMF Equation 314
Alternator on Load 315
Voltage Drop due to Armature Resistance 315
Armature Leakage Reactance 315
Armature Reaction 315
Synchronous Reactance 315
Synchronous Impedance 316
Equivalent Circuit Model and its Phasor Diagram 316
Lagging Power Factor 316
Unity Power Factor 317
Leading Power Factor 317
Open Circuit Characteristic (OCC) Test 318
Short Circuit Characteristic (SCC) Test 318
Voltage Regulation 319
Importance of Voltage Regulation is as follows 320

Copyrighted material
Downloaded From : www.EasyEngineering.net

Downloaded From : www.EasyEngineering.net

Power Delivered by Alternator 320
Synchronous Motors Working Principle 321
Power Developed by Synchronous Motor 323

Experiments

1. Network Theorem 331
2. Power Measurement 337
3. Load Test of Transformer 340
4. O.C./S.C. Test of Transformer 343
5. D.C. Generator 347
6. D.C. Shunt Motor 350
7. 3-Phase Induction Motor 352
8. Calibration of Energy Meter 355

Index 358

Material com direitos autorais
Downloaded From : www.EasyEngineering.net

Downloaded From : www.EasyEngineering.net

UNIT I

1

Introduction

Basically various laws of nature are explained by theories put forth from time to time by scientists. These theories are based on observed facts and able to explain most of observation in similar conditions. Therefore the electrical engineering is also science based on experimentally established fundamental laws. Necessity to study and understand the fundamental laws, facilitates and understanding the concepts of engineering where appropriate laws serve the purpose. The fundamental laws of electrical engineering are Coloumb's, Ohm, Faraday, Kirchhoff and Maxwell.

Electric Charge and Electric Current

Electric charge and energy form the two most fundamental electrical quantities. We know that an atom consists of electrons, protons and neutrons. Each electron has negative charge, each proton has a positive charge while a neutron has no charge, therefore called neutral. In an atom, the number of electrons is equal to the number of protons and the atom is electrically neutron. The electrons may be added to or taken away from an atom. This causes the atom to be charged negatively or positively. If the atom has a proton in excess of those needed to balance the effect of its electron; called a positive ion. If an electron is added to an atom, it attains a negative charge; called a negative ion. A body having ionised atom is said to be electrically charged.

The basic unit of charge is charge of an electron. The unit of charge in the international system of units is the Coulomb (C). An electron has a negative charge of 1.601×10^{-19} Coulomb.

The charge may be at rest or be in motion. A charge in motion constitutes an electric current. Electric current is defined as the time rate of change of charge passing through a specified area.

Electrons flow across the cross-section from left to right. This constitute an electron current from left to right within conductor. The conventional electric current, being the time rate of flow of positive charge will be considered to be flowing in the opposite direction i.e., from right to left within the conductor.

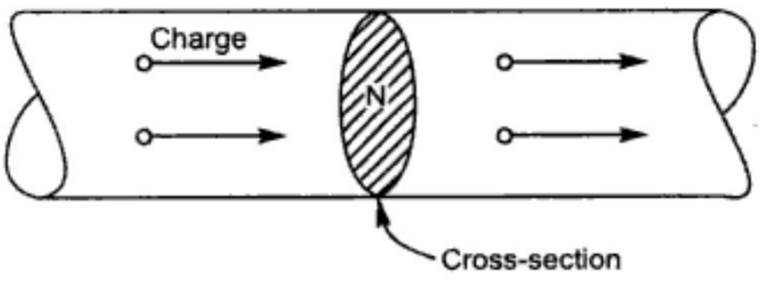

Fig. 1 *Motion of charge in a conductor.*

Material com direitos autorais
Downloaded From : www.EasyEngineering.net

Downloaded From : www.EasyEngineering.net

Expressed mathematically

$$i = \frac{dq}{dt}$$

where q is the charge in motion and t is the time.

The current of one amperes signifies motion of

$$\frac{1}{1.601 \times 10^{-19}} = 6.25 \times 10^{18} \text{ electrons per second across the cross-section of the conductor.}$$

or

$$I = \frac{Q}{t} \text{ amperes}$$

$$Q = It$$

Thus

$$1 \text{ Coulomb} = 1 \text{ ampere second}$$

$$1 \text{ C} = 1 \text{ A sec}$$

$$1 \text{ A} = 1 \text{ C/sec.}$$

Direction of Current

The current results from the motion of charges. The charge carriers may be electrons, holes or ions. The conventional direction of current flow is taken opposite to direction of electron drift. We assume positive direction of current to be the direction in which the positive charge is moving. Thus, when we say that there is a current of 1 A from a point a to point b in a conductor we actually mean that either positive charge is moving from a to b at the rate of 1 C/sec or negative charge is moving from b to a at the rate of 1 C/sec.

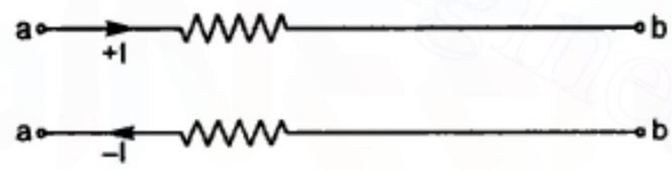

Fig. 2 *Two methods of representing the same current.*

Coulomb's Law

Based upon experiments of Coulomb the force of repulsion existing between two point charges Q_1 and Q_2 is

(*i*) directly proportional to the magnitude of the charges and

(*ii*) is inversely proportional to the distance between them;

Mathematically, the magnitude of the force is given by

$$F = \frac{Q_1 \cdot Q_2}{4\pi \varepsilon r^2} \text{ neutrons.}$$

where Q_1 and Q_2 are expressed in Coulombs, r is in metres, ε is a constant related to the surrounding medium, while 4π is a proportionality constant appearing on account of our using rationalised IS units.

Material com direitos autorais
Downloaded From : www.EasyEngineering.net

Downloaded From : www.EasyEngineering.net

However, frequently written as

$$F = EQ_2 \text{ Newtons}$$

where $E = \dfrac{Q_1}{4\pi \varepsilon r^2}$ Newtons/Coulomb or volt/metre.

The quantity E is called the electric field intensity, while the quantity ε is called the permittivity

$$\varepsilon = \varepsilon_0 \varepsilon_r$$

where ε_r is called relative permittivity and ε_0 is called permittivity of free space

$$\varepsilon_0 = \frac{1}{36\pi \times 10^9} \text{ Farads/metre.}$$

Concept of Potential and Potential Difference

Energy is required for the movement of charge from one point to another. Work per unit charge is called voltage.

The potential difference V beween two points is measured by the work required to transfer unit charge from one point to the other or is the energy required to move one Coulomb of charge from one to the other.

If W = energy required to transfer the charge
Q = charge transferred between the points
V = potential difference

then $$V = \frac{W}{Q} \text{ J/C}$$

Now we say that a voltage exists between the two points. The voltage V between two points may be defined in term of energy that would be required if a charge were transferred from one point to the other. Thus, there can be a voltage between two points even if no charge is actually moving from one to the other. The voltage between *a* and *b* is given by, shown in Figurre. 3

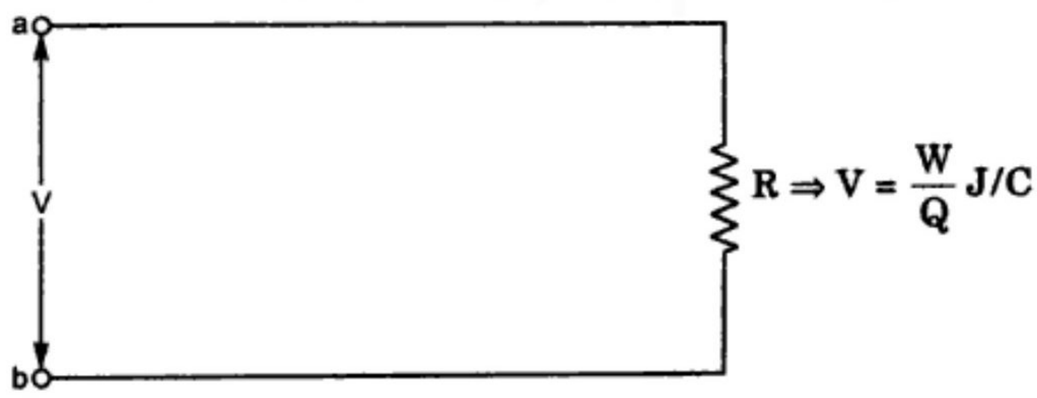

Fig. 3. *Concept of potential*

Electromotive Force of a Source

The electromotive force of a source of voltage is the energy imparted by the source to each Coulomb of charge passing through it. The electromotive force is not the force, but it is the energy expended on each charge.

Material com direitos autorais
Downloaded From : www.EasyEngineering.net

Downloaded From : www.EasyEngineering.net

If, W = energy imparted by the voltage source in Joules (J)

Q = charge transferred through the source in Coulombs (C)

E = e.m.f. of the source

$$E = \frac{W}{Q} \text{ (J/C)}$$

Voltage Drop

The voltage drop between two points of an elements is a decrease in energy in transferring a charge of one Coulombs from one point to the other. The electromotive force, potential difference and voltage drop are all measured in units of voltage.

Reference Polarity

The reference polarities for voltage across an element can be provided by marking a + sign on one end and a – sign on the other. For example, in figure; point *a* is marked with *a*+ sign and point *b* is marked with – sign. Point *a* is at a higher potential and point *b* is at a lower potential. Thus, a positive amount of work is to be done to move a positive charge from *b* to *a*. Let *a* be more positive than *b* by volts, if we go from *a* to *b* so there will be voltage drop of V volts. When we go from *b* to *a* we experience a voltage rise of volts. Therefore V can either be positive or a negative number.

The Basic Circuit

The path of current is called a circuit. The basic electric circuit is shown in fig. 4. It consists of :

(*a*) a source of energy.

(*b*) a load which utilises the energy.

(*c*) two conductors connecting the source and load to transfer the energy.

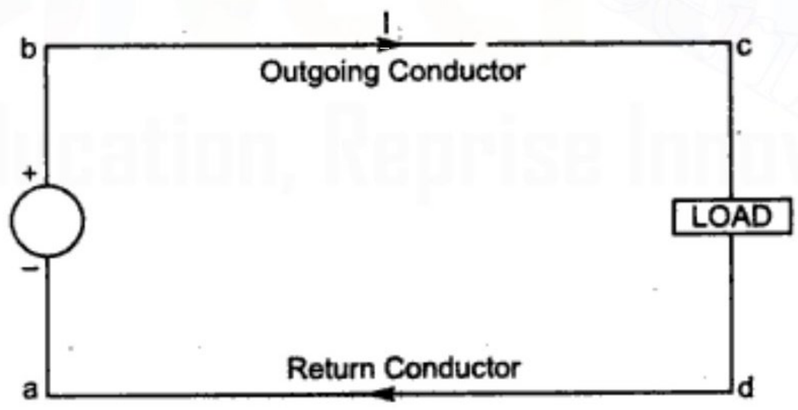

Fig. 4. *The basic circuit*

Ohm's Law

The law states that for a given potential difference the amount of current produced is inversely proportional to the resistance (the resistance depends on the composition of the wire).

Ohm's law may be expressed as

$$V = IR$$

where I = Current in Ampere

Material com direitos autorais
Downloaded From : www.EasyEngineering.net

Downloaded From : www.EasyEngineering.net

R = Resistance of conductor in Ohm

V = Potential difference

$R = \rho \frac{l}{A}$ = electrical property of a material which opposes the current

ρ = resistivity of material/conductor

l = length of conductor

A = cross-sectional area of condutor

or the current through any conductor is directly proportional to the potential difference between its ends. Provided that the physical conditions of the conductor do not change i.e., temperature, length and cross-sectional area of the conductor are unchanged.

Kirchhoff's Laws

There are two laws due to Kirchhoff, Kirchhoff's Current Law (KCL) and Kirchhoff's Voltage Law.

1. *Kirchhoff's Current Law* : The sum of the currents entering a junction is equal to the sum of the currents leaving the junction. If the current towards a junction are considered positive and those away from the same junction negative, then this law states that the algebraic sum of all the currents meeting at a common junction is zero, shown in fig. 5

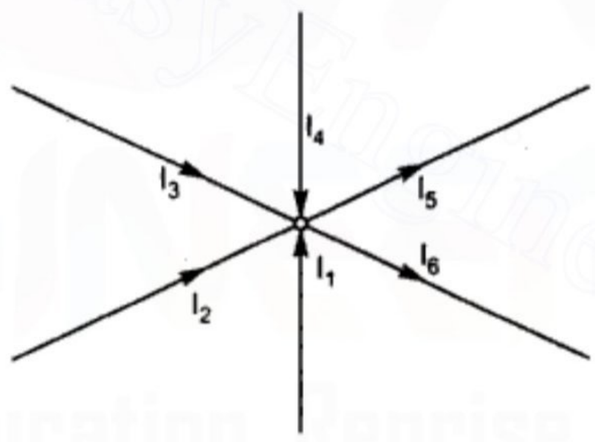

Fig. 5. *Kirchhoff's current law*

$$I_1 + I_2 + I_3 + I_4 = I_5 + I_6$$

Generalised expression of KCL is

$$\sum_{j=1}^{k} I_j = 0 \ .$$

where k denotes the number of circuit elements connect to the node and $\sum$ is greek symbol to indicate summation.

2. *Kirchhoff's Voltage Law :* The algebraic sum of all voltages around a closed path at any instant is zero.

$$V - IR_1 - IR_2 - IR_3 = 0$$

Material com direitos autorais
Downloaded From : www.EasyEngineering.net

Downloaded From : www.EasyEngineering.net

$$V - V_1 - V_2 - V_3 = 0$$

or
$$V = V_1 + V_2 + V_3$$

Generalized expression of KVL is

$$\sum_{J=1}^{k} V_j = 0$$

where V_j represents the voltage drop of the element in any given closed circuit which is assumed to have k elements, fig. 6.

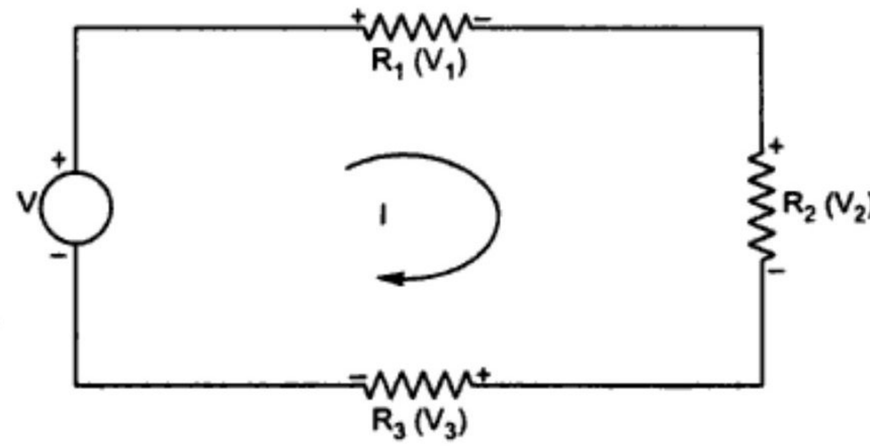

Fig. 6. *Kirchhoff's voltage law*

Power

The electrical power (P) is the product of impressed voltage (V) and resulting current (i).

$$P\,(\text{watts}) = V\,(\text{volts}) \times i\,(\text{amperes})$$

where P is a positive value of energy transferred to circuit.

If the power P is a periodic function time t with period T, then average power

$$P = \frac{1}{T}\int_0^T P\,dt$$

Unit of power is watt

Energy

Since P is the time rate of energy transfer

$$P = \frac{dW}{dt} \text{ and } W = \int_{t_1}^{t_2} P\,dt$$

where W is the energy transferred during the time interval.

Unit of energy is watt second.

Ampere's Law

The force between two very long, parallel wires carrying current (I_1 and I_2) is given by

$$F = \frac{\mu I_1 I_2}{2\pi r}\, l \text{ Newtons} \qquad \text{... (1)}$$

where l = length of conductors

r = distance of separation between wires

μ = property of the medium or permeability of medium.

Further shown by Ampere that the current I_1 could be considered as producing a magnetic field given by

$$B = \frac{\mu I_1}{2\pi r}$$

Substituting equation (2) in equation (1) ; we have the well known relationship:

$$F = BlI_2$$

Material com direitos autorais
Downloaded From : www.EasyEngineering.net

Downloaded From : www.EasyEngineering.net

The above equation is valid for wires carrying current I_1 and I_2 lying in the same plane. If for some reasons, the conductor carrying I_2 is inclined by some angle θ with respect to the line perpendicular to the wire carrying I_1 then the force is given by

$$F = BlI_2 \sin\theta$$

Resistance Parameter

Resistance is one of the three basic parameters of electric circuit theory. It is a proportionality factor in Ohm's law relating current to potential difference.

Resistance, in general way described as that property of a circuit element which offers opposition to the flow of current and in so doing converts electrical energy into heat energy.

For a given conductor

$$V = Ri$$

or

$$i = \frac{V}{R} = G.V$$

where $G = \frac{1}{R}$, is the conductance of the condcutor.

Unit of resistance is Ohm (Ω)

Unit of conductance is Mho (℧)

The power absorbed by a resistor

$$P = Vi = (iR)\,i = i^2R$$

and the corresponding amount of energy converted to heat in time interval $t_2 - t_1$ is given as

$$W = \int_{t_1}^{t_2} i^2R\,dt \text{ Joules}$$

when i is a constant quantity I

$$t = (t_2 - t_1) \text{ sec time interval}$$
$$W = I^2\,Rt \text{ Joules}$$

Thus, resistance referred to as a "sink" or enegy dissipative element.

Although resistance is often considered a constant of proportionality, however it may vary due to temperature changes caused by the heat produced. Unless otherwise stated, resistance is be assumed constant. It is therefore necessary to keep the temperature changes of the resistor within reasonable limits if the resistance is intended to remain constant.

Inductance Parameter

Inductance can be considered as that property of a circuit element by which energy is capable of being stored in a magnetic flux field. An important feature of this element is that it makes itself felt in a circuit only when there is a changing current in it. This aspect of inductance is particularly important from circuit view point because although a circuit may have inductance, its presence in the circuit is felt when there is a time rate of change of current.

$$V_L = L\frac{di}{dt}$$

Copyrighted material
Downloaded From : www.EasyEngineering.net

Downloaded From : www.EasyEngineering.net

In general both V_L and i are function of time.

An appropriate defining equation for inductance is

$$L = \frac{V_L}{\left(\frac{di}{dt}\right)} \text{ Volt-sec/amp or Henrys}$$

Any circuit element that exhibits the property of inductance is called an 'inductor'. In the ideal sense the inductor is considered to be resistanceless, though practically it does contain the wire resistance out of which the inductor coil is formed.

A linear inductor is one for which the inductance parameter is independent of current. As current flows through an inductor it creates space flux. When this flux permeates air strict proportionality between current and flux prevails, so that the inductance parameter stays constant for all values of current. However, when the flux is made to penetrate iron the large current may upset the proportional relationship between the current and the flux produced. In such a case the inductor will be a non-linear one.

To express current in terms of potential difference across the inductor.

$$di = \frac{1}{L} V_L \, dt$$

Integrating, this becomes

$$\int_{i(0)}^{i(t)} di = \frac{1}{L} \int_0^t V_L \, dt$$

$$i(t) = \frac{1}{L} \int_0^t V_L \, dt + i(0)$$

The above equation shows that the current in an inductor is dependent upon the integral of the voltage across its terminals as well as the initial current in the coil at the start of integration.

Assuming zero initial curent in an inductor, if a current i is made to flow through a coil across which appears the potential difference V_L the total energy received in the time interval from zero to t is

$$W = \int_0^t V_L \, i \, dt \text{ Joules}$$

putting,

$$V_L = L \frac{di}{dt}$$

$$W = \int_0^t \left(L \frac{di}{dt}\right) i \, dt$$

$$= \int_0^t L \, i \, di$$

$$\boxed{W = \frac{L}{2} i^2 \text{ Joules}}$$

Thus we find that this inductor absorbs an amount of energy proportional to inductance (L) as well as to the square of instantaneous value of current (i). The energy is stored in the magnetic field and is of finite value and retrievable.

Copyrighted material
Downloaded From : www.EasyEngineering.net

Downloaded From : www.EasyEngineering.net

Linear inductor with iron core inductance is given by

$$L = \frac{N^2 \mu A_m}{l} \text{ Henry}$$

where N = number of turns,
μ = permeability of the iron core,
A_m = cross-sectional area of the core and
L = the length of iron core.

Capacitance Parameter

Capcitance can be considered as that property of the circuit element by which energy is capable of being stored in an electric field. It is felt in a circuit only when there is a changing voltage across the terminals of element.

Capacitance is a proportionally factor relating the charge between two metal surfaces or conductors to the corresponding potential difference existing between them.

$$q = C V_c$$

where q = is the charge
V_c = potential difference

as $$i = \frac{dq}{dt}$$

$$i = C \frac{dV_c}{dt}$$

So the capacitor is a circuit element which has the property of yielding a current directly proportional to the rate of change of voltage across its terminals.

Capacitor current in terms of capacitor voltage

$$dV_c = \frac{1}{C} i\, dt$$

Integrating both sides

$$\int_{V_c(0)}^{V_c(t)} V_c = \frac{1}{C} \int_0^t i\, dt$$

$$V_c(t) = \frac{1}{C} \int_0^t i\, dt + V_c(0)$$

The quantity $V_c(0)$ denotes the initial voltage across the capacitor upon the start of integration process.

Assuming zero initial voltage across the capacitor if current i is allowed to flow in the circuit for a time interval i, the energy delivered to the capacitor during this time is

$$W = \int_0^t V_c\, i\, dt$$

Substuting the value of i

$$W = \int_0^t V_c \left(C \frac{dV_c}{dt} \right) dt$$

$$= \int_0^t C V_c\, dt$$

Copyrighted material
Downloaded From : www.EasyEngineering.net

Downloaded From : www.EasyEngineering.net

$$W = \frac{1}{2} C V_c^2 \text{ Joules}$$

In case of two parallel plates separated by distance of d metres the capacitance may be shown to be

$$C = \frac{\varepsilon A}{d} \text{ Farads}$$

where A is area of the plates in metres, d is distance of separation in metres and ε = permittivity of the material between the plates of the capacitor.

Circuit Response of Single Elements

Elements	*Voltage across the element*	*Current in element*
Resistance (R)	$V(t) = R\, i(t)$	$i(t) = \frac{V(t)}{R}$
Inductance (L)	$V(t) = L \frac{di}{dt}$	$i(t) = \frac{1}{L}\int V\, dt$
Capacitance (C)	$V(t) = C \int i\, dt$	$i(t) = C \frac{dV}{dt}$

During network system analysis certain terms are frequently used. These several terms which are of prime importance during analysis of electrical circuit are defined as under :

1. **Circuit :** A circuit is a closed conducting path through which an electric current either flows or is intended to flow.
2. **Linear Circuit :** A circuit which obeys superposition theorem (*i.e.*, additivity and homogeniety) and does not change with the change in either voltage or current.
3. **Non-linear Circuit :** A circuit which does not obeys super position theorem and whose circuit condition changes with change in voltage or current.
4. **Electrical Network :** A combination of various electric elements like resistor, capacitor, inductor which are connected in any manner resulting a closed conducting path through which electric current flows is called as electrical network.
5. **Active Network :** These are the types of network which contains one or more than one e.m.f. source in it.
6. **Passive Network :** These are the types of network which does not contain, any e.m.f. source in it.
7. **Node :** It is a junction point where various electrical elements are connected together.
8. **Branch :** It is that portion of network which lies between the two nodes.
9. **Loop :** It is a closed path in a circuit in which no elements or node is encountered twice.
10. **Mesh :** It is type of loop that contains no loop in it.

Electrical Parameters

The various elements of an electric circuit are called its parameters. Basically two types of electrical elements are there as defined earlier. The two elements are active elements and passive elements.

Copyrighted material
Downloaded From : www.EasyEngineering.net

Downloaded From : www.EasyEngineering.net

Active Elements

The active elements are the basic source of energy to the electric circuit (like voltage source, current source).

Voltage Source

The figure shown below shows a battery having open circuit voltage E delivering or giving a current to a load resistance. The output voltage V_o across the load resistance R_L is given by

$$V_o = E \cdot \frac{R_L}{R_L + R_S} \qquad \text{... (1)}$$

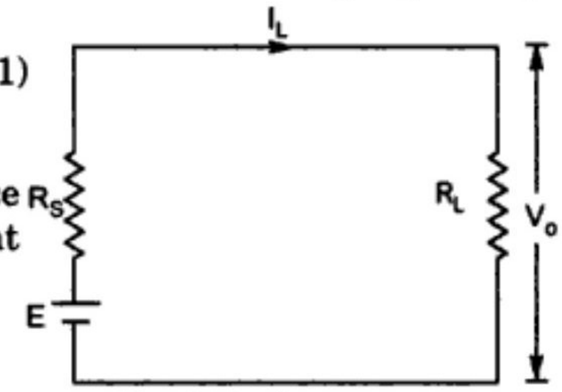

Fig. *(a) Voltage source*

A battery source is converted into a constant voltage source by adding the internal resistance in series with the constant voltage source.

If $\qquad R_S << R_L$

$\qquad V_o \simeq E$

At the time when load resistance R_L is very much larger than the source resistance R_S, the output voltage will be nearly equal to the source voltage. Finally it is concluded that an ideal voltage source is one which has zero source resistance.

Current Source

A current source is that type of source which delivers specified current through its terminals, irrespective of changes in the load resistance. The figure shows a current source having source resistance R_S and feeding a load resistance R_L.

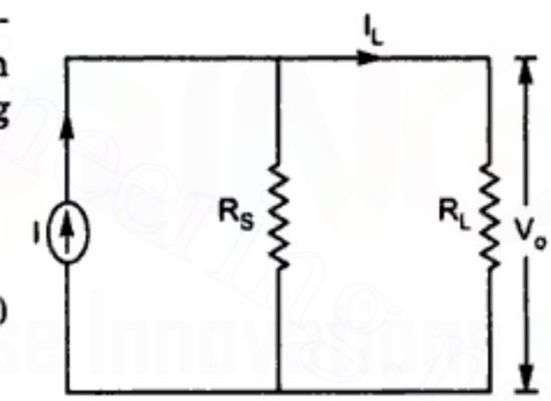

Fig. *(b) Curent source*

The load current I_L is given by

$$I_L = I \frac{R_S}{R_S + R_L} \qquad \text{... (2)}$$

If $\qquad R_L << R_S$

$\qquad I_L \simeq I$

When the load resistance is very much smaller than the source resistance, then the current in load resistance will be nearly equal to the source current I.

If source resistance R_S is infinite, the current source will be ideal current source.

Source Conversion

For the voltage source of figure (*a*)

$$I_L = \frac{E}{R_S + R_L} = \frac{E}{R_S}\left(\frac{R_S}{R_S + R_L}\right) \qquad \text{... (3)}$$

Copyrighted material
Downloaded From : www.EasyEngineering.net

Downloaded From : www.EasyEngineering.net

Equation (3) is similar to equation (2). Thus a voltage source having voltage E and source resistance R_S can be replaced by a current source with current $\frac{E}{R_S}$ and a source resistance R_S.

For current source of figure (*b*)

$$V_0 = I_L R_L = I \frac{R_S}{R_L + R_S} . R_L$$

$$= IR_S \left(\frac{R_L}{R_L + R_S} \right) \quad \text{... (4)}$$

Equation (4) is similar to equation (1). Thus a current source can also be converted into voltage source.

Passive Elements

The passive elements are those element which acts as sink for electrical energy. The example of passive elements are Resistor, Capacitor and Inductor.

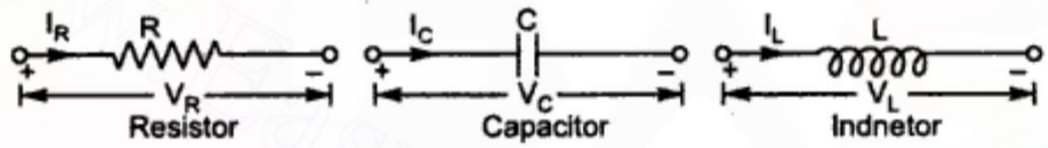

Resistor → It is the type of element which creates hinderance to the flow of current or restrict the flow of current.

Capacitor → It is the element which stores the electric charges for prescribed duration of time.

Inductor → In this type of element the magnetic form of energy is stored for certain time limit.

SOLVED NUMERICAL

Example 1 : *Obtain the value of i in the circuit of figure if*

(a) $v = 1$ V *(b)* $v = +2$ V

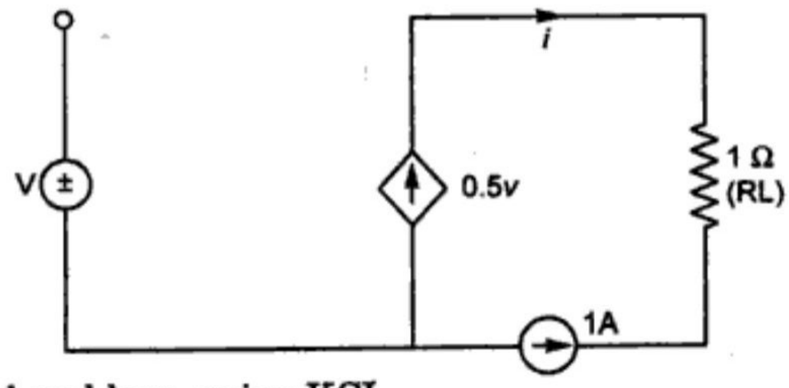

Solution : In the right hand loop, using KCL

$$i = 0.5\,v - 1$$

for $v = 1$ V, $i = -0.5$ A

i.e., *i* is flowing in the anticlockwise direction

Materiál chránený autorským právom
Downloaded From : www.EasyEngineering.net

Downloaded From : www.EasyEngineering.net

for $v = +2\text{ V}$

$i = 0$; *i.e.*, no current in the loop

Example 2 : *Find i_1 and i_2 in figure below :*

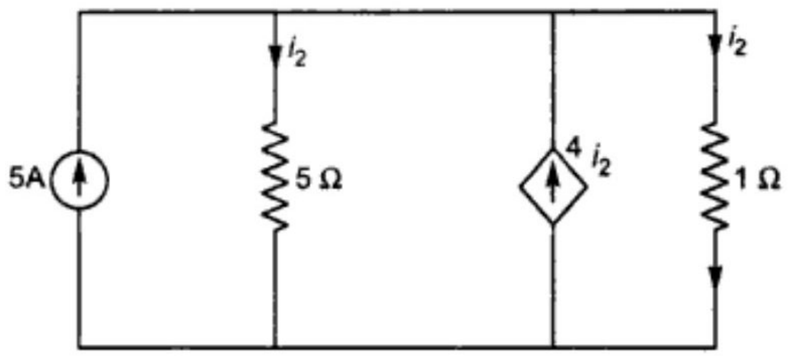

(*a*)

Solution : Now we consider that voltage drop across 5 Ω and 1 Ω resistor be v volts in this figure (*b*) where v is shown with assumed polarity.

Applying KCL at node x

$$i_2 + i_1 = 5 + 4i_2$$

or $$i_1 - 3i_2 = 5 \qquad \text{... (a)}$$

However, $$i_1 = \frac{v}{1} = v \text{ A and } i_2 = \frac{v}{5} \text{ A}$$

Then from (*a*), $$v - \frac{3}{5}v = 5 \text{ or } v = 1.25 \text{ V}$$

This gives $$i_1 = 12.5 \text{ A and } i_2 = 2.5 \text{ A}$$

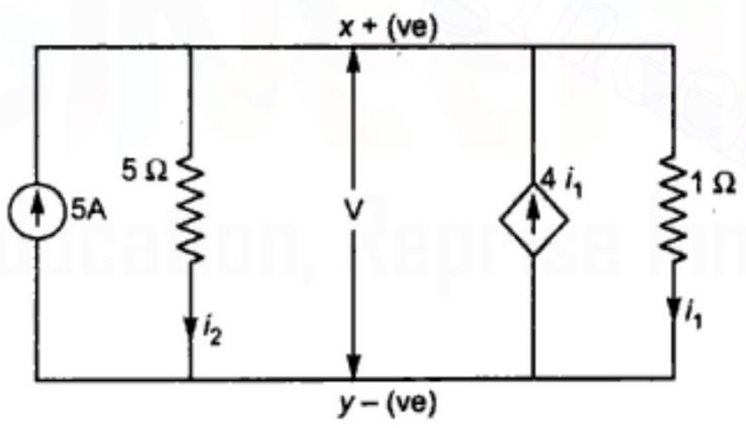

(*b*)

Example 3 : *Obtain the value of i in figure. If $i_1 = 6$ A, $i_2 = -4$ A in dependent current sources.*

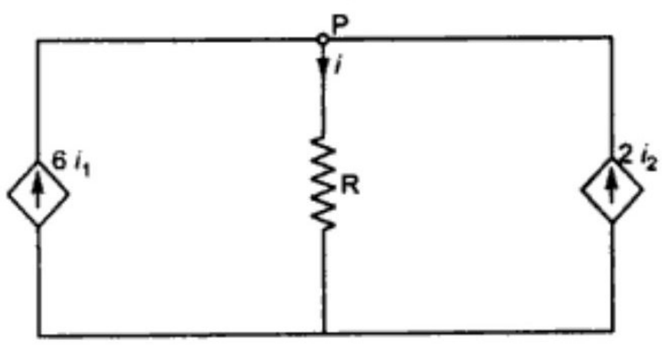

Materiál chránený autorským právom
Downloaded From : www.EasyEngineering.net

Downloaded From : www.EasyEngineering.net

Solution : Using KCl at node "P"

$$6i_1 + 2i_2 = i$$

$$6 \times 6 + 2(-4) = i$$

$$i = 28 \text{ A}$$

Example 4 : *What is voltage V_s across the open switch in circuit of figure (below) :*

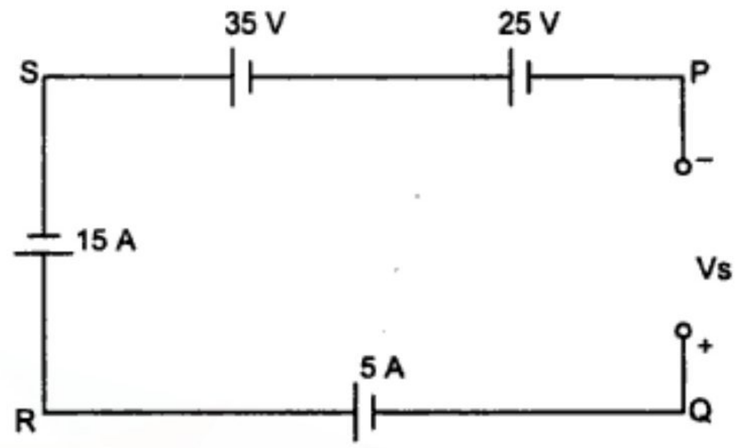

Solution : Applying KVL to find V_s, starting from point P in the clockwise direction and using the sign convention.

We have $V_s + 5 - 15 - 35 + 25 = 0$

$\therefore$ $V_s = 20$ **V. Ans.**

Example 5 : *By applying Kirchhoff's voltage law, find the value of current i and the voltage drop v_1 and v_2 in the below figure which contains a current dependent voltage source. What is the voltage of the dependent source? All resistance values are in ohms.*

Solution :

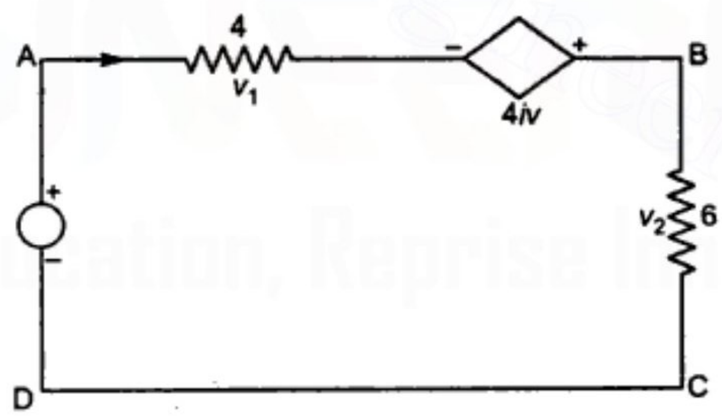

Applying KVL to the circuit and starting from point A, we get

$$-v_1 + 4i - v_2 + 8 = 0$$

or $$v_1 - 4i + v_2 = 8$$

Now $$v_1 = 4i$$

and $$v_2 = 6i$$

then $$4i - 4i + 6i = 8$$

$$\therefore \quad i = \frac{8}{6} = 1.33 \text{ A}$$

$$\therefore \quad v_1 = 4 \times 1.33 = 5.32 \text{ V}$$

and $$v_2 = 6 \times 1.33 = 7.98 \text{ V}$$

Voltage of dependent source = $4i$

$= 4 \times 1.33 = 5.32$ V. **Ans.**

Materiál chránený autorským právom
Downloaded From : www.EasyEngineering.net

Downloaded From : www.EasyEngineering.net

2

Basic Concepts of Network Analysis and Theorems for DC Circuits

Network Analysis

There are two general approaches to network analysis :

Direct Method

In this method of analysis, the circuit is considered in its original form and the various unknowns like voltage, current etc., are directly calculated. This method is applicable to limited area where the assigned circuit is simple. It includes Kirchhoff's laws, Nodal analysis, Loop analysis, Superposition theorem, Compensation theorem and Reciprocity theorem etc.

Network Reduction Method

In this method the original network to be solve is converted into equivalent circuit and then different parameters are calculated. It provides the computational ease and save wastage of time. It can be applicable for both simple and complicated electrical circuits. This method includes Thevenen's theorem, Norton's theorem, Delta/Star and Star/Delta coversion etc.

Kirchhoff's Laws

A German Scientist Gustav R. Kirchhoff formulated two laws, in 1847, which are named after him. The electric circuit theory is based on these two laws.

Kirchhoff's Current Law (KCL)

It states that at any instant the algebraic sum of currents flowing into a junction point (node) of an electrical circuit is zero.

The KCL can be expressed mathematically as

$$\sum_{J=1}^{h} I_J = 0 \qquad \text{... (1)}$$

where h denotes the number of circuit elements connected to the node and Σ denotes summation.

Materiál chránený autorským právom
Downloaded From : www.EasyEngineering.net

Downloaded From : www.EasyEngineering.net

In given figure, when KCL is applied we get

$$i_1 - i_2 + i_3 - i_4 + i_5 + i_6 + i_7 - i_8 = 0$$

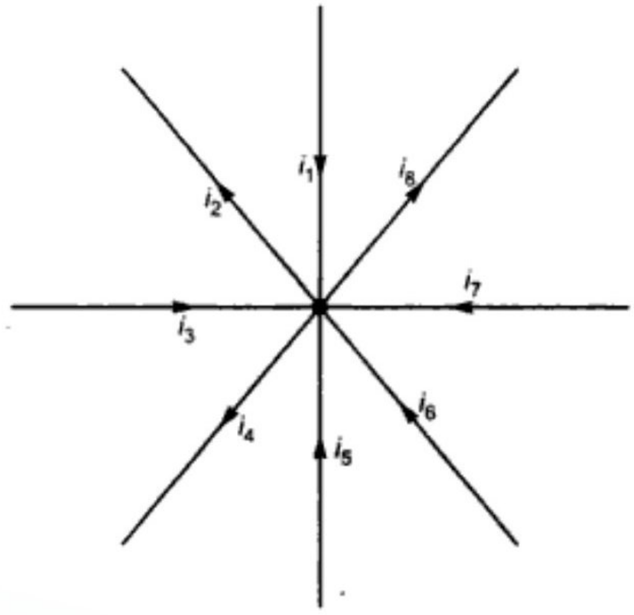

Fig. 1 *Kirchhoff's Current Law (KCL)*

The current going towards the node is considered to be positive and the outgoing current is considered to be negative. The opposite convention can also be used.

$$i_1 + i_3 + i_5 + i_6 + i_7 = i_2 + i_4 + i_8$$

Incoming current = Outgoing current.

Kirchhoff's Voltage Law (KVL)

It states that the algebraic sum of all branch voltages around any closed loop of a network is zero at all instants of time. In other words the algebraic sum of e.m.f.s around a closed loop equals the algebraic sum of IR drops around to loop. It is mathematically expressed as :

$$\sum_{K=1}^{n} V_J = 0 \qquad \text{... (1)}$$

where V_J is voltage in the Jth element of a closed loop having n elements.

Alternatively it can be also expressed as

$$\sum IR + \sum e.m.f. = 0$$

Cramer's Rule

Solution of linear equations by Determinants :

Let us consider three linear equation in which three unknown current is to be determined.

$$x_{11}I_1 + x_{12}I_2 + x_{13}I_3 = A_1$$
$$x_{21}I_1 + x_{22}I_2 + x_{23}I_3 = A_2$$
$$x_{31}I_1 + x_{32}I_2 + x_{33}I_3 = A_3$$

In matrix firm above equation can be written as

Materiál chránený autorským právom
Downloaded From : www.EasyEngineering.net

Downloaded From : www.EasyEngineering.net

$$\begin{bmatrix} x_{11} & x_{12} & x_{13} \\ x_{21} & x_{22} & x_{23} \\ x_{31} & x_{32} & x_{33} \end{bmatrix} \begin{bmatrix} I_1 \\ I_2 \\ I_3 \end{bmatrix} = \begin{bmatrix} A_1 \\ A_2 \\ A_3 \end{bmatrix} \quad \text{... (2)}$$

The current I_1, I_2 and I_3 can be determined by

$$I_1 = \frac{\begin{bmatrix} A_1 & x_{12} & x_{13} \\ A_2 & x_{22} & x_{23} \\ A_3 & x_{32} & x_{33} \end{bmatrix}}{\Delta}, \; I_2 = \frac{\begin{bmatrix} x_{11} & A_1 & x_{13} \\ x_{21} & A_2 & x_{23} \\ x_{31} & A_3 & x_{33} \end{bmatrix}}{\Delta}, \; I_3 = \frac{\begin{bmatrix} x_{11} & x_{12} & A_1 \\ x_{21} & x_{22} & A_2 \\ x_{31} & x_{32} & A_3 \end{bmatrix}}{\Delta}$$

and determinant Δ can be solved as

$$\Delta = \begin{vmatrix} x_{11} & x_{12} & x_{13} \\ x_{21} & x_{22} & x_{23} \\ x_{31} & x_{32} & x_{33} \end{vmatrix}$$

$$x_{11}(x_{22}x_{33} - x_{32}x_{23}) - x_{12}(x_{21}x_{33} - x_{31}x_{23}) + x_{13}(x_{21}x_{32} - x_{31}x_{22}).$$

Analysis of Network by Kirchhoff's Law

Node Analysis

In node or junction method, the solution is analysed by the circuit as shown in figure 2. In nodal analysis it is essential to compute all branch currents. In writing the current expression the assumption is made that the node potential is always higher than the other voltages appearing in the equation. In node analysis the number of independent node pair equations needed in one less than the number of junction in the network. It is given by

$$n = J - 1$$

where n = number of independent node equation

J = number of junctions

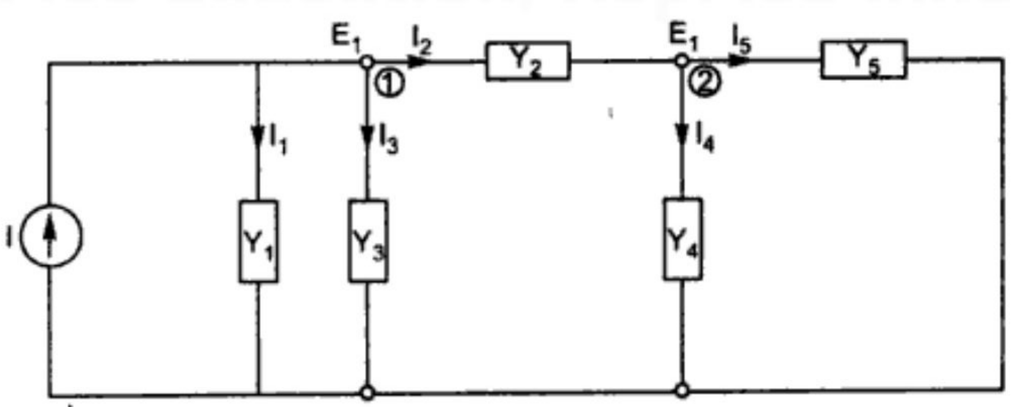

Fig. 2 *Node analysis*

In above figure (a) the reference node is indicated by 0. Applying KCL at node (1) we get

$$I - I_1 - I_3 - I_2 = 0 \quad \text{... } (i)$$

Հեղինակային իրավունքով պաշտպանված նյութ
Downloaded From : www.EasyEngineering.net

Downloaded From : www.EasyEngineering.net

Equation (*i*) in terms of admittances and potentials can be written as

$$I - Y_1E_1 - Y_3E_1 - Y_2(E_1 - E_2) = 0$$

$\therefore$ E_1 is at higher potential

or, $$(Y_1 + Y_2 + Y_3)E_1 + (-Y_2)E_2 = 0 \quad \text{... (ii)}$$

Now considering node (2) we have

$$I_2 - I_5 - I_4 = 0 \quad \text{... (iii)}$$

It can also be written as

$$Y_2(E_1 - E_2) - Y_5E_2 - Y_4E_2 = 0$$

or, $$(-Y_2)E_1 + (Y_2 + Y_4 + Y_5)E_2 = 0 \quad \text{... (iv)}$$

Equation (*ii*) and (*iv*) may be written in matrix form as

$$\begin{bmatrix} Y_1 + Y_2 + Y_3 & -Y_2 \\ -Y_2 & Y_2 + Y_4 + Y_5 \end{bmatrix} \begin{bmatrix} E_1 \\ E_2 \end{bmatrix} = \begin{bmatrix} I \\ 0 \end{bmatrix} \quad \text{... (v)}$$

Using Cramer's rule, voltages at all the nodes can be obtained.

$$E_1 = \frac{1}{\Delta}\begin{vmatrix} I & -Y_2 \\ 0 & Y_2 + Y_4 + Y_5 \end{vmatrix}$$

$$E_2 = \frac{1}{\Delta}\begin{vmatrix} Y_1 + Y_2 + Y_3 & I \\ -Y_2 & 0 \end{vmatrix}$$

and determinant, $$\Delta = \begin{vmatrix} Y_1 + Y_2 + Y_3 & -Y_2 \\ -Y_2 & Y_2 + Y_4 + Y_5 \end{vmatrix}$$

As a general, node equation can be written as

$$[Y]\,[E] = [I]$$

Mesh Analysis

The Kirchhoff's voltage law is base in mesh analysis of the network. The name being derived from the similarities in appearance between the closed loops of a network and a physical "fence" or mesh. In this method, a distinct current is assumed in the loop and the properties of drops in each element in the loop is determined by the assumed direction of loop current for that loop. In node analysis we have considered admittance but in mesh analysis replaced by impedance. For mesh analysis consider Fig. 3 as shown below :

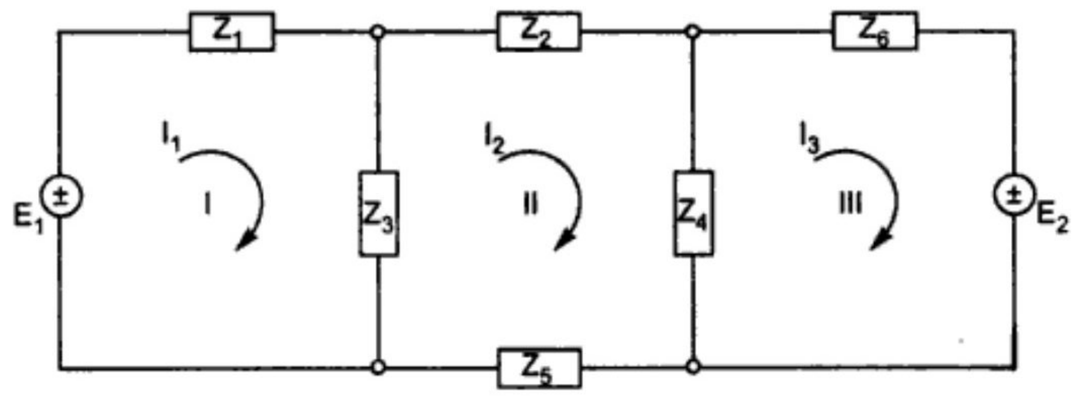

Fig. 3 *Mesh analysis*

Հեղինակային իրավունքով պաշտպանված նյութ
Downloaded From : www.EasyEngineering.net

Downloaded From : www.EasyEngineering.net

Apply KVL to above figure we get,

In mesh I,

$$I_1Z_1 + (I_1 - I_2)\,Z_3 - E_1 = 0$$

or, $$(Z_1 + Z_3)\,I_1 + (-Z_3)\,I_2 + (0)\,I_3 = E_1 \qquad \ldots (i)$$

In mesh II,

$$(I_2 - I_1)\,Z_3 + I_2Z_2 + (I_2 - I_3)\,Z_4 + I_2Z_5 = 0$$

$$I_2Z_3 - I_1Z_3 + I_2Z_2 - I_2Z_4 - I_3Z_4 + I_2Z_5 = 0$$

$$I_1\,(-Z_3) + I_2\,(Z_2 + Z_3 + Z_4 + Z_5) + I_3\,(-Z_4) = 0 \qquad \ldots (ii)$$

and in mesh III,

$$(I_3 - I_2)\,Z_4 + I_3Z_6 + E_2 = 0$$

or, $$(0)\,I_1 + (-Z_4)\,I_2 + (Z_4 + Z_6)\,I_3 = -E_2 \qquad \ldots (iii)$$

Using equation (*i*), (*ii*) and (*iii*) as obtained in three meshes in matrix form as

$$\begin{bmatrix} Z_1 + Z_3 & -Z_3 & 0 \\ -Z_3 & Z_2 + Z_3 + Z_4 + Z_5 & -Z_4 \\ 0 & -Z_4 & Z_4 + Z_6 \end{bmatrix} \begin{bmatrix} I_1 \\ I_2 \\ I_3 \end{bmatrix} = \begin{bmatrix} E_1 \\ 0 \\ -E_2 \end{bmatrix}$$

Now, using Cramer's rule currents I_1, I_2 and I_3 can be determined *i.e.*,

$$I_1 = \frac{1}{\Delta} \begin{vmatrix} E_1 & -Z_3 & 0 \\ 0 & Z_2 + Z_3 + Z_4 + Z_5 & -Z_4 \\ -E_2 & -Z_4 & Z_4 + Z_6 \end{vmatrix}$$

$$I_2 = \frac{1}{\Delta} \begin{vmatrix} Z_1 + Z_3 & E_1 & 0 \\ -Z_3 & 0 & -Z_4 \\ 0 & -E_2 & Z_4 + Z_6 \end{vmatrix}$$

$$I_3 = \frac{1}{\Delta} \begin{vmatrix} Z_1 + Z_3 & -Z_3 & E_1 \\ -Z_3 & Z_2 + Z_3 + Z_4 + Z_5 & 0 \\ 0 & -Z_4 & -E_2 \end{vmatrix}$$

where,

$$\Delta = \begin{vmatrix} Z_1 + Z_2 & -Z_3 & 0 \\ -Z_3 & Z_2 + Z_3 + Z_4 + Z_5 & -Z_4 \\ 0 & -Z_4 & Z_4 + Z_6 \end{vmatrix}$$

So, in general the above can be concluded as

$$[E] = [Z]\,[I].$$

Հեղինակային իրավունքով պաշտպանված նյութ
Downloaded From : www.EasyEngineering.net

Downloaded From : www.EasyEngineering.net

Star/Delta Transformation

Consider the figure shown below for transformation of network.

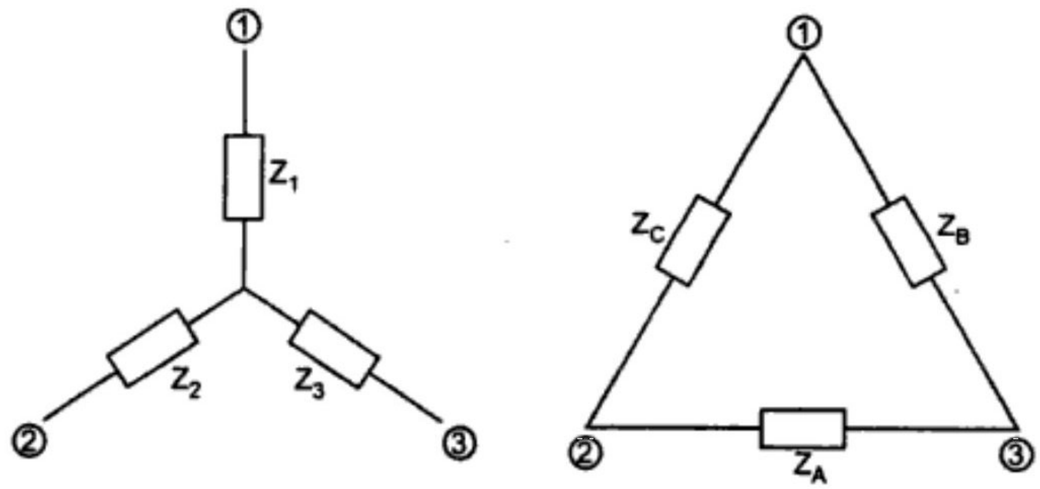

(*i*) Conversion from Delta to Star :

According to above figure,

$$Z_1 = \frac{Z_B Z_C}{Z_A + Z_B + Z_C} \; ; Z_2 = \frac{Z_C \cdot Z_A}{Z_A + Z_B + Z_C} \text{ and } Z_3 = \frac{Z_A Z_B}{Z_A + Z_B + Z_C}$$

(*ii*) Conversion from Star to Delta :

$$Y_A = \frac{Y_2 Y_3}{Y_1 + Y_2 + Y_3}$$

$$Y_B = \frac{Y_3 Y_1}{Y_1 + Y_2 + Y_3}$$

$$Y_C = \frac{Y_1 Y_2}{Y_1 + Y_2 + Y_3}$$

where, $Y_1 = \frac{1}{Z_1}$, $Y_2 = \frac{1}{Z_2}$ and $Y_3 = \frac{1}{Z_3}$

In case of resistance, the impedance Z will be changed or replaced with R and admittance Y will be replaced with conductance G.

Superposition Theorem

The superposition theorem states that in any linear bilateral network containing one or more than one source of e.m.f. or current the resultant current in any branch of the network is equal to the algebraic sum of the currents produced by each source acting alone.

Explanation : Consider figure shown below, applying the superposition theorem, let us first consider source V_1 alone and replace the V_2 by short circuit in step I.

(**Note :** Voltage source is short circuited while current source is open-circuited).

Material com direitos autorais
Downloaded From : www.EasyEngineering.net

Downloaded From : www.EasyEngineering.net

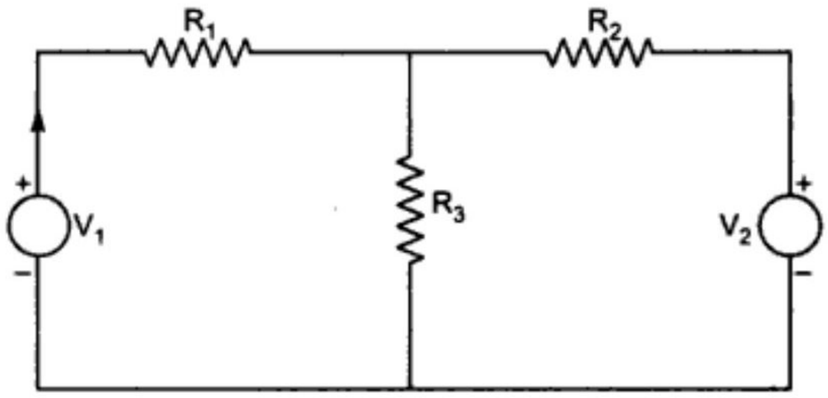

Fig. (a)

1. **Step I :** Consider only one source of e.m.f. or current and obtain the branch currents. Here in Fig. (*b*), we get

$$I'_1 = \frac{V_1}{\frac{R_2 \cdot R_3}{R_2 + R_3} + R_1}$$

and $$I'_2 = I'_1 \frac{R_3}{R_2 + R_3}$$

and finally $$I'_3 = I'_1 - I'_2 \qquad \text{... (i)}$$

Step II : Likewise in Step I, repeat the same procedure for all the independent sources *i.e.*,

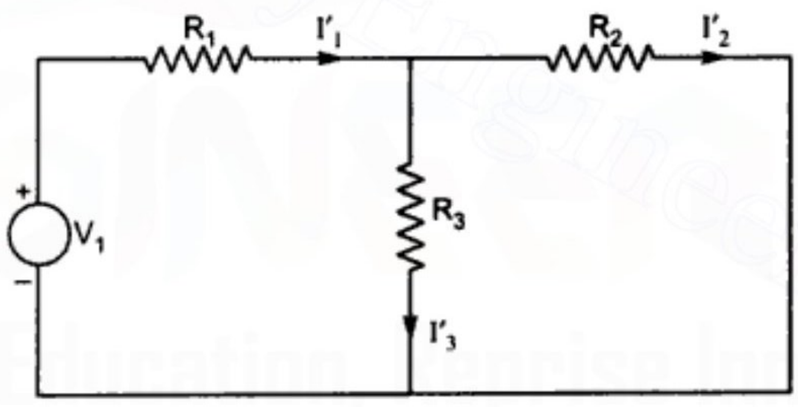

Fig. (b)

In Step II, V_1 source is short circuited and V_2 source is considered and then different branch currents are again calculated.

We get, $$I''_2 = \frac{V_2}{\frac{R_1 \cdot R_3}{R_1 + R_3} + R_2} \text{ and } I''_1 = I''_2 \frac{R_3}{R_1 + R_3}$$

Also $$I''_3 = I''_2 - I''_1 \qquad \text{... (ii)}$$

Now according to superposition theorem :

Using steps I and II all branch currents are calculated.

Step III $$I_3 = I'_3 + I''_1$$

$$I_2 = I'_2 - I''_2$$

Material com direitos autorais
Downloaded From : www.EasyEngineering.net

Downloaded From : www.EasyEngineering.net

$$I_1 = I_1' - I_1''$$

Hence, all the branch currents are calculate.

Thevenin's Theorem

Thevenin's theorem states that: Any two terminal linear network containing independent voltage and current sources may be replaced by an equivalent voltage V_{th} which is open circuit voltage between two terminals with R_{th} being equivalent resistance of the network as viewed from two terminals. All the sources are replaced by their internal resistance and reistance by their equivalent resistance.

Explanation : Let us consider a circuit shown below :

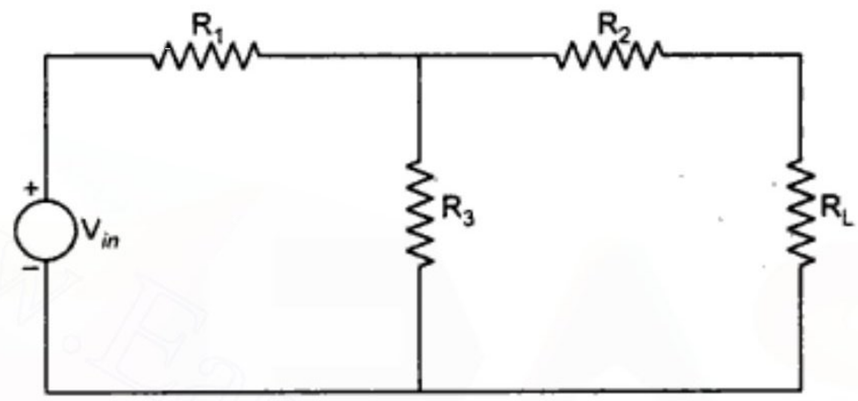

Fig. (a)

Steps for solving and explaining thevenin's theorem is given below :

Step I: Remove the load resistance R_L (resistance across which thevenin's theorem circuit voltage is to be determined. So, R_L is open circuited as shown in figure (*b*).

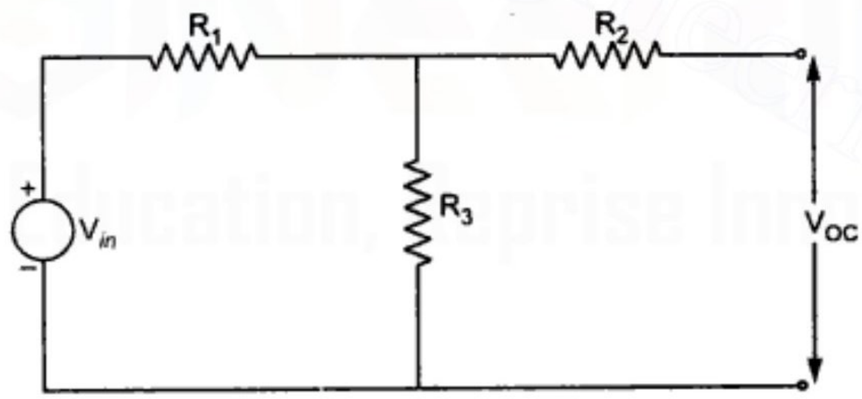

Fig. (b)

In order to find the V_{oc}, the load resistance R_L is removed and acts as open circuited.

$$V_{oc} = IR_3 = \frac{V_{in}}{R_1 + R_3} . R_3$$

Step II: In Step II all the sources either voltage source or current source is removed. The voltage source is replaced by its internal resistance and the current source is open circuited. Now, the internal resistance (Thevenin's resistance) of the source side looking through open circuit is obtained.

Material com direitos autorais
Downloaded From : www.EasyEngineering.net

Downloaded From : www.EasyEngineering.net

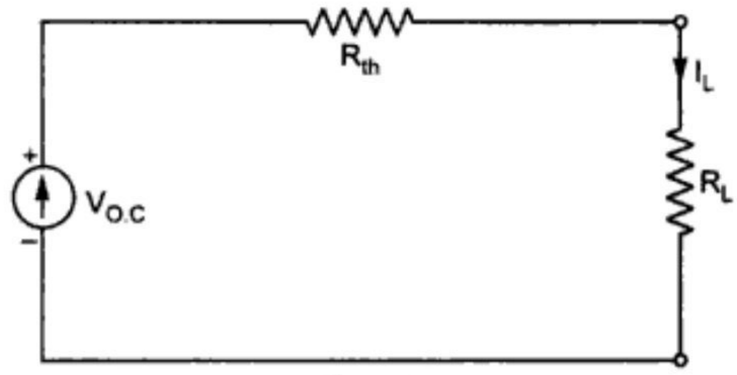

Fig. (c)

According to figure (*b*), we get

$$R_{th} = R_2 + \frac{R_1 \cdot R_3}{R_1 + R_3}$$

Step III: In this step we obtain Thevenin's equivalent circuit by using Step I and Step II. The load resistance across which theorem's equivalent is to be obtain is inserted in the Thevenin's equivalent circuit as shown in figure and then I_L current across load resistance is obtained.

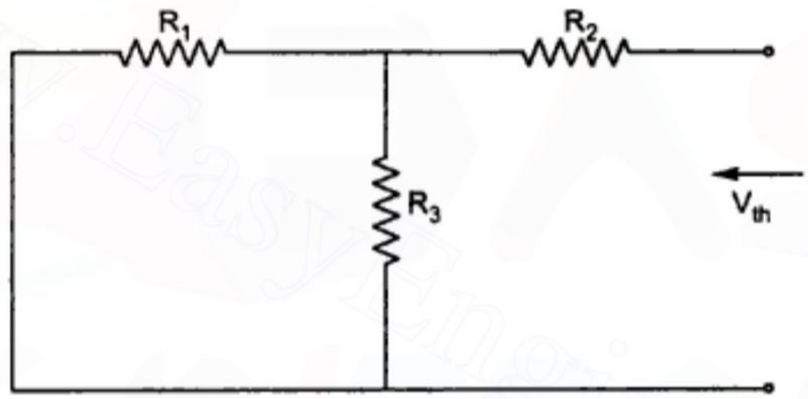

Fig. (d)

According to Thevenin's theorem,

$$I_L = \frac{V_{oc} \text{ or } V_{th}}{R_{th} + R_L} \text{ amp.}$$

Norton's Theorem

The Norton's theorem is called as dual of Thevenin's theorem because all the parameters of the network can be obtained either of the methods. It will be explained later on.

Norton's theorem states that linear bilateral any two terminal network containing independent voltage and current sources may be replaced by an equivalent current I_N which is in parallel with a resistance R_N. The subscript N represents the Norton. All the voltage sources are short-circuited and current source is open circuited and then the Norton equivalent resistance R_N and Norton's equivalent current I_N is obtained viewing inside the two terminal.

Explanation : Consider Fig. (*a*) drawn below (*b*)

เนื้อหาคุ้มครองลิขสิทธิ์
Downloaded From : www.EasyEngineering.net

Downloaded From : www.EasyEngineering.net

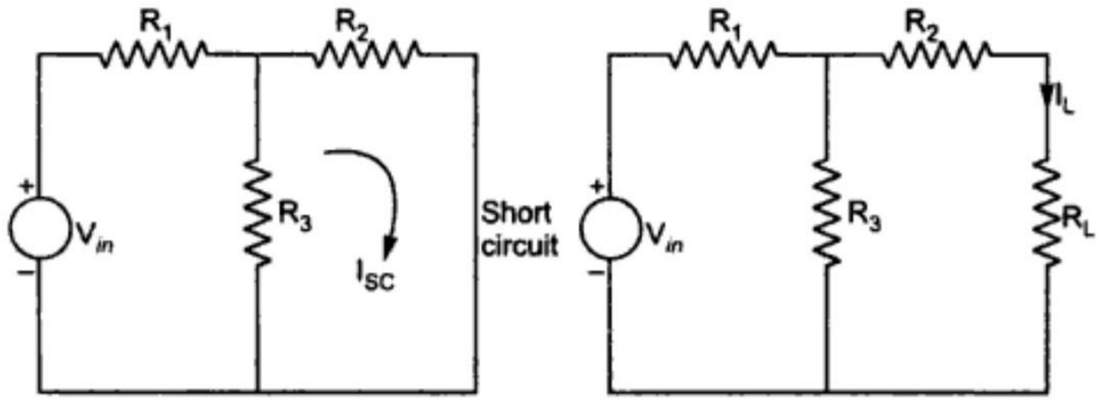

Fig. (a) **Fig. (b)**

(Simple network for obtaining I_{SC})

According to Norton's theorem remove load resistance R_L by short circuit. We get,

$$I = \frac{V_{in}}{R_1 + \dfrac{R_2 \cdot R_3}{R_2 + R_3}} \text{ and } I_{SC} = I \frac{R_3}{R_3 + R_2}$$

Step I : The load resistance is removed and then find the internal resistance of the source by removing the source as short circuit.

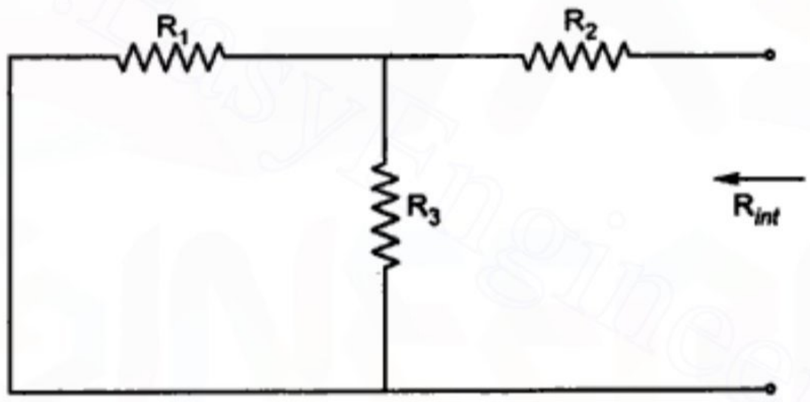

Fig. (c)

As shown in figure (*b*) we calculate internal resistance as

$$R_{int} = R_2 + \frac{R_1 \cdot R_3}{R_1 + R_3}$$

Step II : Now here, Norton's equivalent circuit model is drawn putting R_{int} in parallel to I_{SC} as shown in Fig. (*a*)

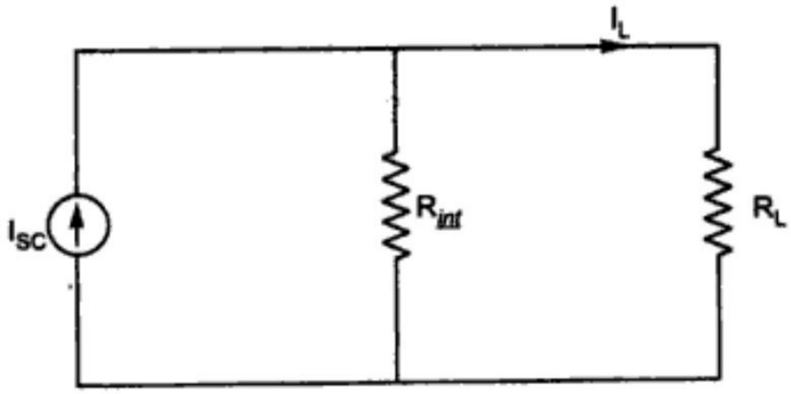

Fig. (d)

เนื้อหาคุ้มครองลิขสิทธิ์
Downloaded From : www.EasyEngineering.net

Downloaded From : www.EasyEngineering.net

Step III : Connect the load resistance again in the circuit and calculate load current I_L.

$$I_L = I_{SC} \frac{R_{int}}{R_{int} + R_L}$$

Maximum Power Transfer Theorem

This theorem states that the maximum power is transferred in a linear network when the internal resistance of the source is equal to the load resistance.

Explanation : A resistance of varying nature R_L is connected to a d.c. source network as shown in Fig. (*a*) whereas Fig. (*b*) shows Thevenin's voltage V_{th} and theorem's resistance, R_{th}, of the source network.

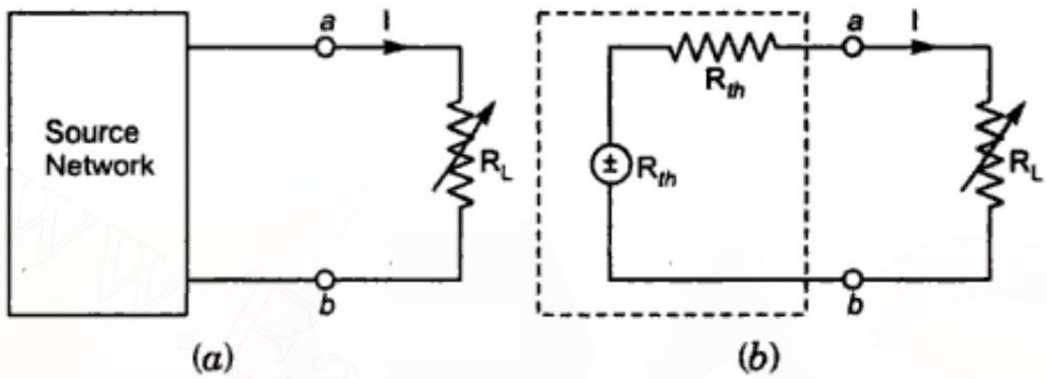

Step I : Remove load resistance R_L and obtain Thevenin's resistance R_{th} of the source by viewing inword across open circuit terminal.

From Fig. (*b*), we get

$$I = \frac{V_{th}}{R_{th} + R_L}$$

while power delivered to the resistive load is

$$P_L = I^2 R_L = \left(\frac{V_{th}}{R_{th} + R_L}\right)^2 \times R_L$$

P_L can be changed by changing R_L and hence maximum power can be delivered at the condition when

$$\frac{dP_L}{dR_L} = 0$$

Step II : According to maximum power transfer theorem, the resistance R_L should be equal to the R_{th} in order to achieve maximum power transfer in a network.

However, $$\frac{dP_L}{dR_L} = \frac{1}{\left[(R_{tb} + R_L)^2\right]^2}\left[(R_{th} + R_L)^2 \frac{d}{dR_L}\left(V_{th}^2 . R_L\right) - V_{th}^2 . R_L \frac{d}{dR_L}(R_{th} + R_L)^2\right].$$

or, $$= \frac{1}{(R_{th} + R_L)^4}\left[(R_{th} + R_L)^2 V_{th}^2 - V_{th}^2 . R_L \times 2(R_{th} + R_L)\right].$$

เนื้อหาคุ้มครองลิขสิทธิ์
Downloaded From : www.EasyEngineering.net

Downloaded From : www.EasyEngineering.net

$$= \frac{V_{th}^2 (R_{th} + R_L - 2R_L)}{(R_{th} + R_L)^3} = \frac{V_{th}^2 (R_{th} - R_L)}{(R_{th} + R_L)^3}$$

But for maximum transfer of power we know that

$$\frac{dP_L}{dR_L} = 0$$

Therefore, $\frac{V_{th}^2 (R_{th} - R_L)}{(R_{th} + R_L)^3} = 0$ which yields

$$(R_{th} - R_L) = 0$$

Consequently we obtain

$R_{th} = R_L$ which is the exact case for maximum ower transfer in a network.

Step III : In this way find etrevinins voltage V_{th} across the load terminal which is open circuited. Finally in Step IV.

Step IV : Maximum power transfer is achieved and given by

$$\frac{V_{th}^2}{4R_{th}}$$

Millman's Theorem

This theorem states that : Any number of current or voltage source in parallel can be replaced by a equivalent current source or voltage source or voltage whose current is the algebraic sum of individual source currents or voltage and source resistance is the parallel combination of individual source resistances.

Explanation : According to Millman's Theorem :

$$V = \frac{\pm V_1G_1 \pm V_2G_2 \pm \ldots \pm V_nG_n}{G_1 + G_2 + \ldots + G_n}$$

where, $R = \frac{1}{G} = \frac{1}{G_1 + G_2 + \ldots + G_n}$

For explaining Millman's theorem, consider a circuit diagram shown below :

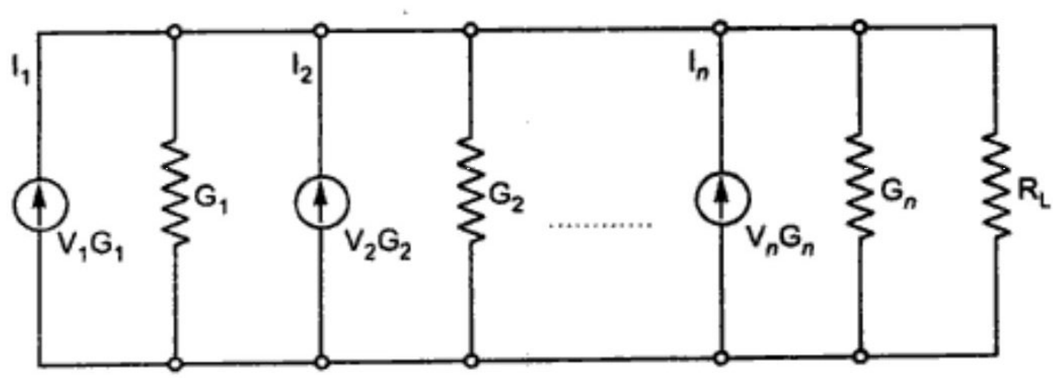

Fig. (a)

Conversion from parallel voltage to current source.

เนื้อหาคุ้มครองลิขสิทธิ์
Downloaded From : www.EasyEngineering.net

Downloaded From : www.EasyEngineering.net

Step I : Calculate the conductance (G_1, G_2, ...) of each voltage source (V_1, V_2, ...) and obtain G while the load resistance is removed.

Let us consider Fig. (*b*) below :

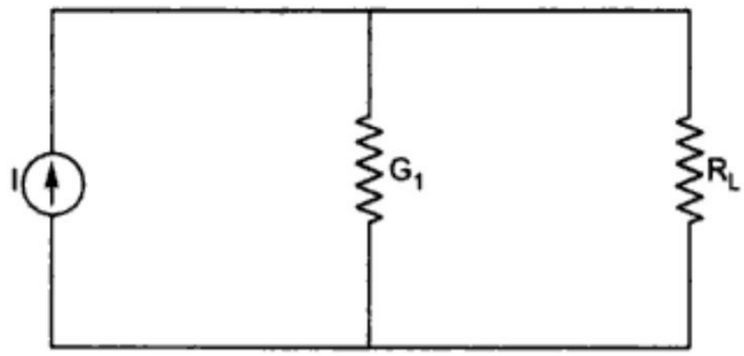

Fig. (b)

Here, we know that according to Millman's theorem

$$I = I_1 + I_2 + I_3 + \ldots + I_n$$

$$G = G_1 + G_2 + \ldots + G_n$$

At very next instant the current source is converted into its equivalent voltage source.

Fig. (c)

Therefore,

$$V = IR = \frac{I}{G} = \frac{\pm I_1 \pm I_2 \pm \ldots \pm I_n}{G_1 + G_2 + \ldots + G_n}$$

Step II : Obtain (R), the equivalent series resistance with the equivalent voltage source (V).

Also we know that, $\quad R = \dfrac{1}{G}$

i.e., Resistance is reciprocal of conductance

$R = \dfrac{1}{G_1 + G_2 + \ldots + G_n}$ → Apply Millman's theorem to find V, the equivalent voltage source given by

Step III :

$$V = \frac{\pm \dfrac{V_1}{R_1} \pm \dfrac{V_2}{R_2} \pm \ldots \pm \dfrac{V_n}{R_n}}{\dfrac{1}{R_1} + \dfrac{1}{R_2} + \ldots + \dfrac{1}{R_n}}$$

Copyrighted material
Downloaded From : www.EasyEngineering.net

Downloaded From : www.EasyEngineering.net

Therefore finally, $$V = \frac{\pm V_1G_1 \pm V_2G_2 \pm \ldots \pm V_nG_n}{G_1 + G_2 + \ldots + G_n}$$

In summation form it can be given as

$$= \frac{\sum_{j=1}^{n} V_j \cdot G_j}{\sum_{j=1}^{n} G_j} \text{ and } G_j = \frac{1}{R_j}$$

Step IV : Finally the current through the load is expressed as follow *i.e.*,

$$I_L = \frac{V}{R + R_L}, \text{ where } R_L \text{ is the load resistance.}$$

Compensation Theorem

This theorem states that: If any change let ΔR, is made in the resistance of any branch of a network when the current was originally I, then the change of current at any other point in the network can be calculated by letting that an e.m.f. – $I\Delta R$ has been introduced into the changed branch while all other sources have their e.m.fs suppressed and are represented by their Internal resistances.

Explanation : Consider a load resistance R_L is connected to a d.c. source network whose Thevenin's equivalent gives V_{th}, as Thevenin's resistance as shown in figure.

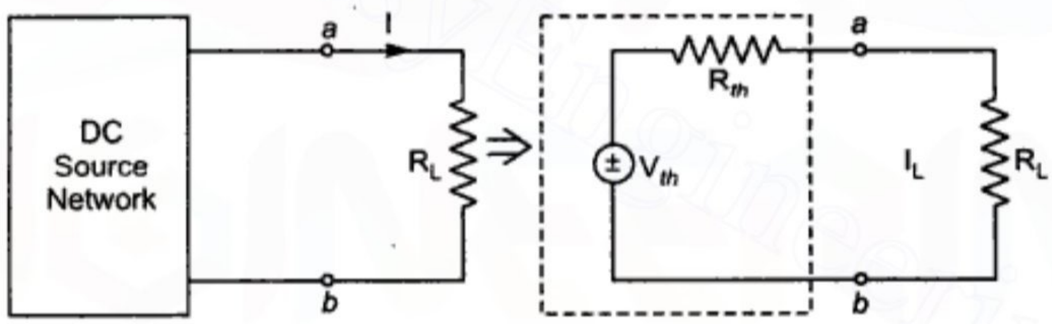

Fig. (a)

Thevenin's equivalent source.

Here we have,

$$I_L = \frac{V_{th}}{R_{th} + R_L}$$

Now, according to compensation theorem, the load resistance is changed to $(R_L + \Delta R_L)$ and the rest of the circuit remains unchanged, then the Thevenin's equivalent network remains the same as shown in figure (*b*).

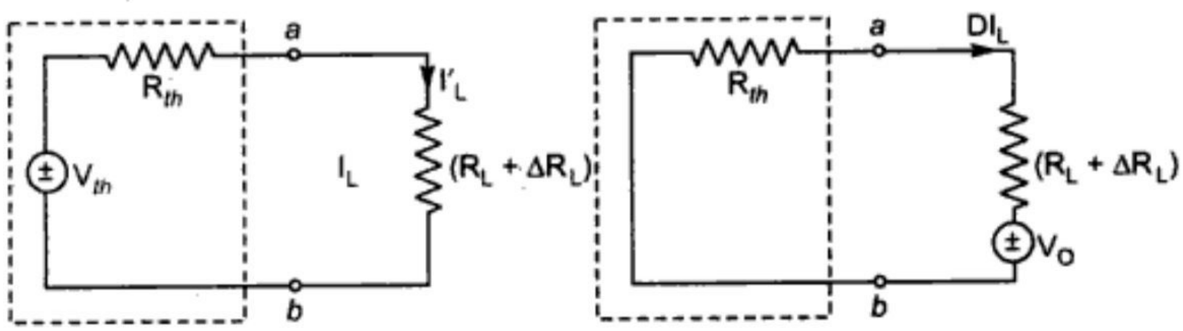

Fig. (b)

Copyrighted material
Downloaded From : www.EasyEngineering.net

Downloaded From : www.EasyEngineering.net

Therefore, the change in current is turned as ΔI_L.

So,
$$\Delta I_L = I_L' - I_L$$
$$= \frac{V_{th}}{R_{th} + (R_L + \Delta R_L)} - \frac{V_{th}}{R_{th} + R_L}$$
$$= \frac{V_{th}\{R_{th} + R_L - (R_{th} + R_L + \Delta R_L)\}}{(R_{th} + R_L + \Delta R_L)(R_{th} + R_L)}$$
$$= -\left(\frac{V_{th}}{R_{th} + R_L}\right)\frac{\Delta R_L}{R_{th} + R_L + \Delta R_L} = -\frac{I_L\,\Delta R_L}{R_{th} + R_L + \Delta R_L}$$
$$= \frac{(-V_0)}{R_{th} + R_L + \Delta\Delta_L}$$

The term V_0 is equal to the product of load current and changed resistance DR_L and it is known as compensation voltage. In this way the compensation theorem is verified.

Tellegen's Theorem

The Tellegen's theorem states that the sum of product of branch voltage drop and branch current at any time in a network is zero.

Explanation : Consider the circuit shown below as

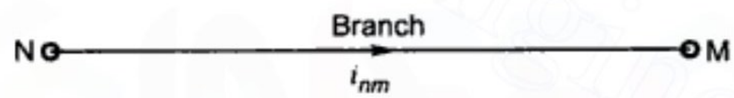

(Branch of a circuit connected between nodes N and M).

Consider $\quad i_{MN\,(=i_K)} = K_{th}$ branch through current

V_K = Voltage drop in K_{th} branch

$= V_m - V_n$ while V_M and V_N are the node voltages.

We have, $\quad V_K i_{MN} = (V_M - V_N)\, i_{MN} = V_K i_K$

[also $V_K i_K = (V_N - V_M)\, i_{NM}$, So, $i_{MN} = -i_{NM}$]

summing above two relation we get

$$2V_K i_K = (V_M - V_N)\, i_{MN} + (V_N - V_N)\, i_{NM}$$

or,
$$V_K i_K = \frac{1}{2}\left[(V_M - V_N)\, i_{MN} + (V_N - V_M)\, i_{NM}\right]$$

Above type of equation is written for every branch and finally added up. The general form obtained as

$$\sum_{K=1}^{n} V_K\, i_K = \frac{1}{2}\sum_{M=1}^{n}\sum_{N=1}^{n}(V_M - V_N)\, i_{MN}$$

Copyrighted material
Downloaded From : www.EasyEngineering.net

Downloaded From : www.EasyEngineering.net

$$= \frac{1}{2}\sum_{M=1}^{n} V_M \left(\sum_{N=1}^{n} i_{MN}\right) - \frac{1}{2}\sum_{N=1}^{n} V_N \left(\sum_{M=1}^{n} i_{MN}\right)$$

i.e.,

$$\sum_{M=1}^{n} i_{MN} = 0 \; ; \; \sum_{N=1}^{n} i_{NM} = 0$$

With above result, finally we obtain

$$\sum_{K=1}^{n} V_K \, i_K = 0$$

Finally, we can conclude that, according to the Tellegen's theorem all the branch currents and branch voltages are calculated by conventional method and then sum of their product is calculated which will be equal to zero.

Voltage Divider Rule

It is applicable to a series circuit where the same current flows through each of the given resistor. Consider a series circuit with a constant voltage source shown below :

Consider a source voltage denoted by V.

Total Resistance $\quad R = R_1 + R_2 + R_3$

According to Voltage Divider Rule, the voltage drop across all the resistors will be

$$V_1 = V \cdot \frac{R_1}{R}$$

$$V_2 = V \cdot \frac{R_2}{R}$$

and

$$V_3 = V \cdot \frac{R_3}{R}$$

In this way we obtain all the voltage drops across all the resistors in series.

Materiál chránený autorským právom
Downloaded From : www.EasyEngineering.net

Downloaded From : www.EasyEngineering.net

Current Divider Rule

The current divider rule is applicable to the circuit where the several resistors are connected in parallel.

Consider the circuit diagram shown below where a source voltage V is connected with several resistors which are parallel to each other.

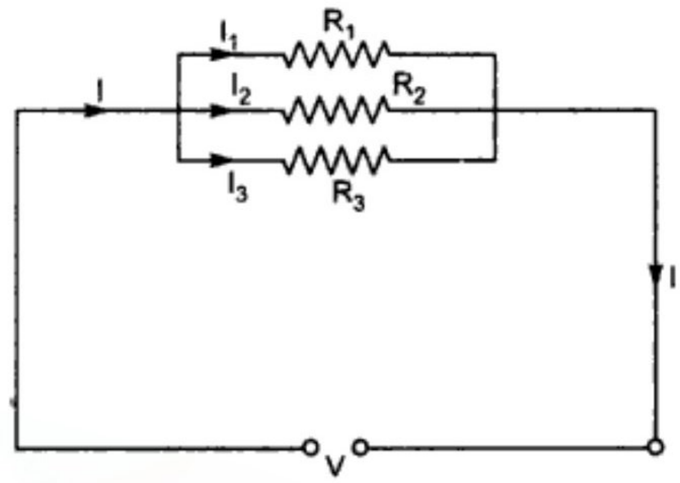

The potential drop across all the resistor is same, current through each resistor is different and calculated by Ohm's law and total current is equal to the sum of all currents, *i.e.*,

$$I = I_1 + I_2 + I_3 = \frac{V}{R_1} + \frac{V}{R_2} + \frac{V}{R_3}$$

V → applied voltage

R → equivalent resistance

By Ohm's law $\quad I = \dfrac{V}{R}$

$$\therefore \quad \frac{V}{R} = \frac{V}{R_1} + \frac{V}{R_2} + \frac{V}{R_3} \text{ or, } \frac{1}{R} = \frac{1}{R_1} + \frac{1}{R_2} + \frac{1}{R_3}$$

Also, $\quad G = G_1 + G_2 + G_3$

as $\quad \dfrac{1}{R} = G.$

SOLVED NUMERICAL PROBLEMS

Example 1 : *Determine the value of resistance R so that maximum power transfer takes place from the rest of the network to R in figure (a).*

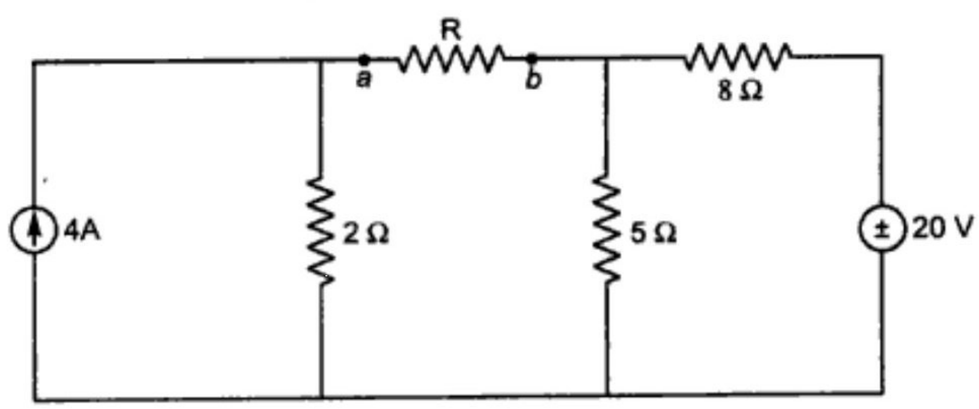

Fig. (a)

Materiál chránený autorským právom
Downloaded From : www.EasyEngineering.net

Downloaded From : www.EasyEngineering.net

Solution : Let us convert the current source into a voltage source as shown below in figure (*b*)

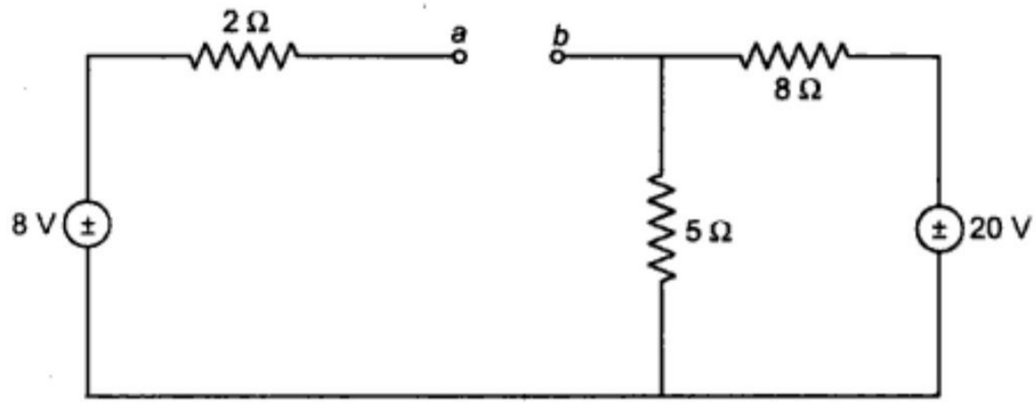

Fig. (b)

Remove R from circuit as open circuit and obtain voltage V_{oc} as

$$i = \frac{20}{13} = 1.53 \text{ A}$$

$\therefore$ V_{th} = drop across 5 Ω = 1.53 × 5 = 7.69 V

Thus in the left loop, $-8 + V_{0_C} + 7.69 = 0$

or $V_{oc} = 8 - 7.69 = 1.69$ V.

Now, again, circuit can be drawn removing all the sources from the circuit for obtaining R_{th} as

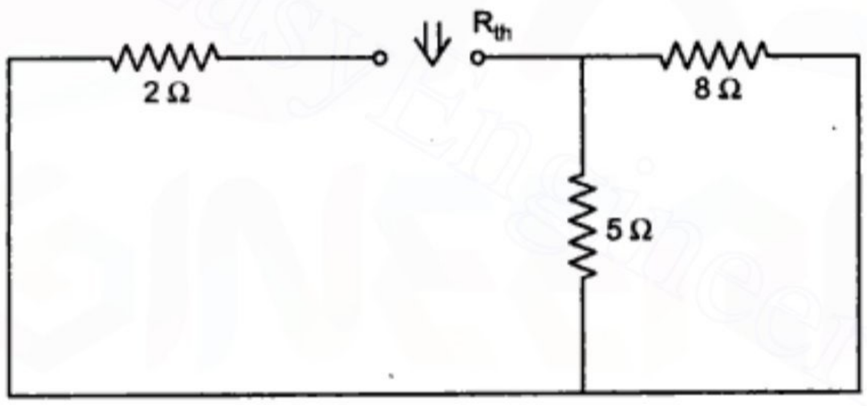

Fig. (c)

$$R_{th} = \frac{5 \times 8}{5 + 8} + 2 = \frac{40}{13} + 2 = 5.07\ \Omega$$

According to maximum power transfer theorem

$$R = R_{th} = 5.07\ \Omega$$

Example 2 : *Calculate the value of R which will absorb maximum power from the circuit of figure (a). Also calculate the value of maximum power.*

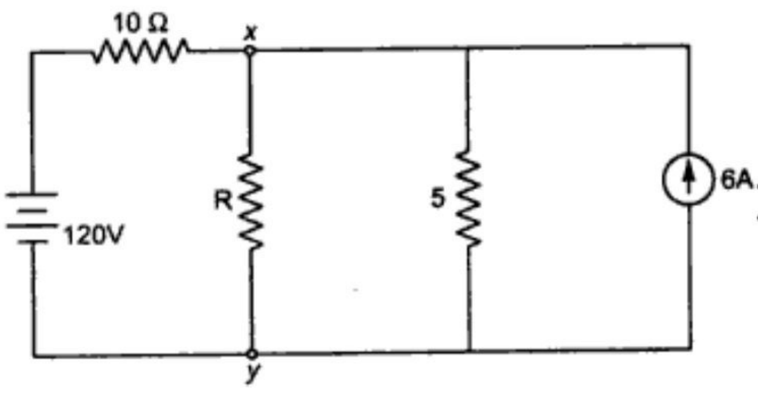

Fig. (a)

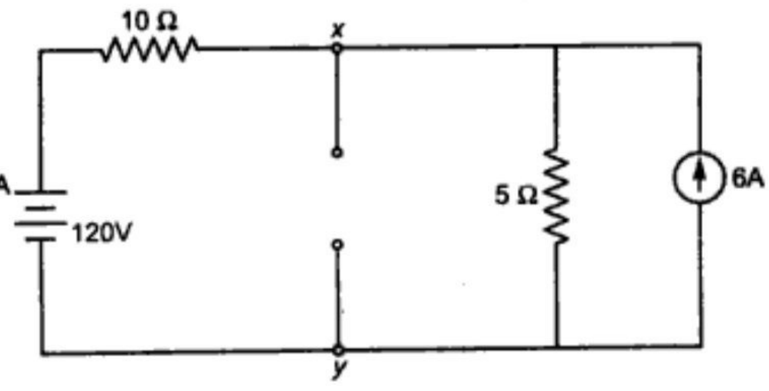

Fig. (b)

Materiál chránený autorským právom
Downloaded From : www.EasyEngineering.net

Downloaded From : www.EasyEngineering.net

Solution : Let us remove R and calculate Thevenin's voltage V_{th} across terminal $x - y$ as shown in figure (*b*).

In very next step convert the voltage source to current source or vice-versa *i.e.*,

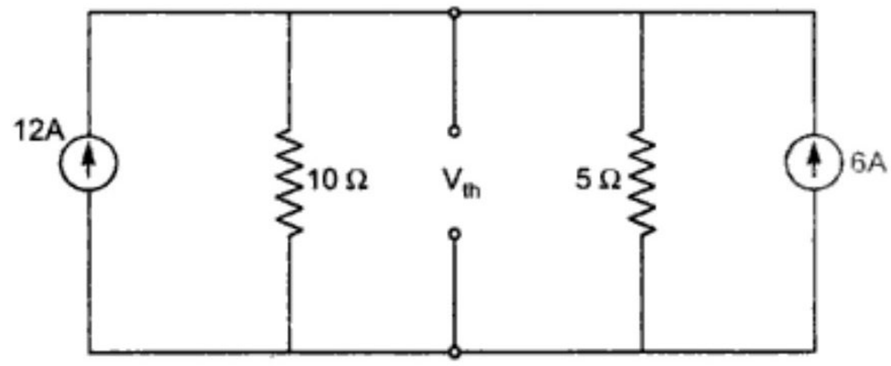

Fig. (c)

Applying KCL to figure (*c*), we get

$$\frac{V_{th}}{10} + \frac{V_{th}}{5} = 12 + 6$$

or, $$V_{th} = 60\text{ V}$$

For finding R_{th}, all the sources are removed *i.e.*, current source is open circuited and voltage source if any is short circuited. The figure (*a*) takes the form as shown in figure (*d*).

$$R_{th} = 10115 = \frac{10 \times 5}{10 + 5}$$

$$= \frac{50}{15} = \frac{10}{3}\ \Omega.$$

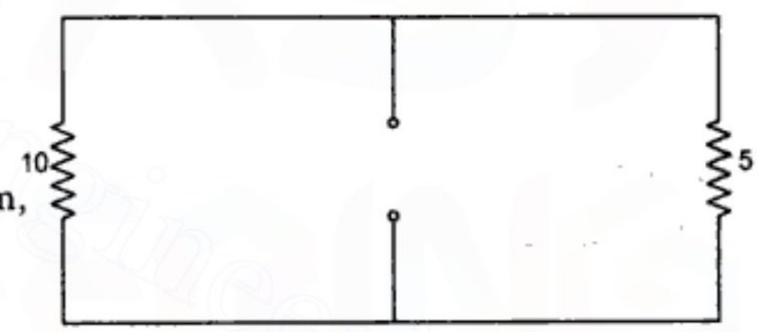

Fig. (d)

According to maximum power transfer theorem,

$$I = 60 \div \frac{10}{3} = 9\text{ A}$$

$$P_{max} = I^2R = (9)^2 \times \frac{10}{3} = 270\ \Omega$$

Millman's Theorem

Example 1 : *Using Millman's theorem, calculate the current through R_L in the circuit of figure (a) and find voltage drop.*

[Given $r_1 = r_2 = r_3 = 2\ \Omega$, $R_L = 5\ \Omega$]

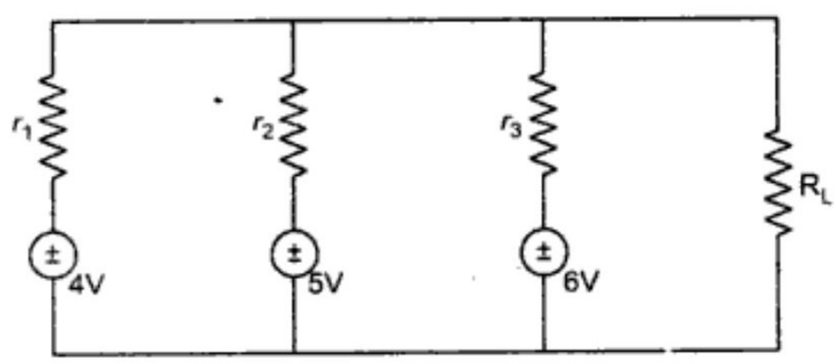

Fig. (a)

Solution : Assuming V be the equivalent voltage source and R be the equivalent resistance to be connected in series with the voltage source of Millman's equivalent network.

Materiál chránený autorským právom
Downloaded From : www.EasyEngineering.net

Downloaded From : www.EasyEngineering.net

Here,
$$V = \frac{-V_1G_1 - V_2G_2 + V_3G_3}{G_1 + G_2 + G_3}$$

and
$$R = \frac{1}{G} = \frac{1}{G_1 + G_2 + G_3} = \frac{1}{\frac{1}{R_1} + \frac{1}{R_2} + \frac{1}{R_3}}$$

Putting the values, we get

$$V = \frac{-4 \times \frac{1}{2} - 5 \times \frac{1}{2} + 6 \times \frac{1}{2}}{\frac{1}{2} + \frac{1}{2} + \frac{1}{2}} = \frac{-2 - 2.5 + 3}{0.5 + 0.5 + 0.5}$$

$$= \frac{-4.5 + 3}{1.5} = -1 \text{ V}$$

and
$$R = \frac{1}{\frac{1}{2} + \frac{1}{2} + \frac{1}{2}} = \frac{1}{1.5} = 6.67\ \Omega.$$

Millman's equivalent circuit is drawn as below :
From figure (*b*)

$$I = \frac{6.67}{6.67 + 5} = 5.7 \text{ A}$$

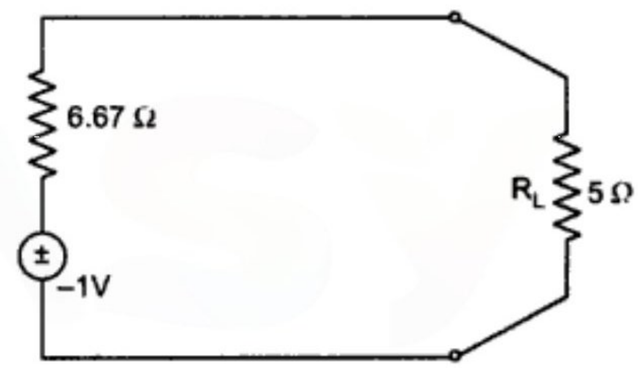

Fig. (b)

Tellegen's Theorem

Example 1 : *In the network of figure (a), established the validity of Tellegen's theorem provided $V_1 = 8V$, $V_2 = 4V$, $V_4 = 2V$. Also $I_1 = 4A$, $I_2 = 2A$ and $I_3 = 1A$.*

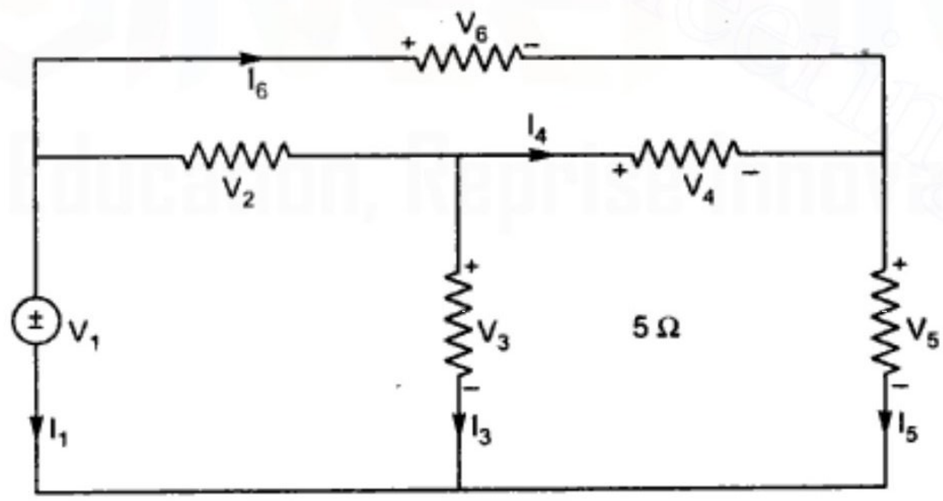

Fig. (a)

Solution : The primary step is to redraw figure (*a*) and clearly show the loop and nodes as drawn in figure (*b*).

Materiál chránený autorským právom
Downloaded From : www.EasyEngineering.net

Downloaded From : www.EasyEngineering.net

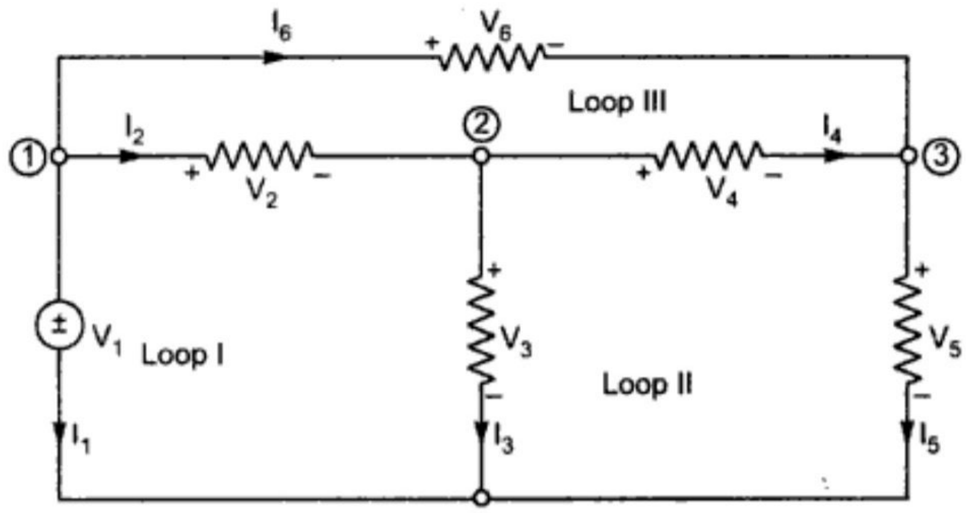

Fig. (b)

In loop I, applying KVL

$$-V_1 + V_2 + V_3 = 0$$

or, $$V_3 = V_1 - V_2 = 8 - 4 = 4V$$

Similarly

In loop II, applying KVL gives

$$-V_3 + V_4 + V_5 = 0$$

or, $$V_5 = V_3 - V_4$$
$$= 4 - 2 = 2V$$

In loop III, applying KVL yields

$$-V_2 + V_6 - V_4 = 0$$
$$V_6 = V_2 + V_4 = 4 + 2 = 6V$$

Now, consider node 1 and applying KCL, we get

$$I_1 + I_2 + I_6 = 0$$

or, $$I_6 = -I_1 - I_2$$
$$= -4 - 2 = 6A$$

Again, at node 2, applying KCL

$$I_2 = I_3 + I_4,\ I_4 = I_2 - I_3$$
$$= 2 - 1 = 1A$$

and at node 3,

$$I_4 + I_6 = I_5$$
$$I_5 = 1 + (-6) = -5A.$$

According to Tellegen's theorem,

$$\sum_{n=1}^{n} V_n I_n = V_1I_1 + V_2I_2 + V_3I_3 + V_4I_4 + V_5I_5 + V_6I_6$$
$$= 8 \times 4 + 4 \times 2 + 4 \times 1 + 2 \times 1 + 2 \times (-5) + 6 \times (-6)$$
$$= 32 + 8 + 8 + 2 - 10 - 36$$
$$= 0$$

Hence verified.

Bahan dengan hak cipta
Downloaded From : www.EasyEngineering.net

Downloaded From : www.EasyEngineering.net

Star / delta and delta / star transformation :

Example 1 : *Convert the delta connection shown in figure into its equivalent star connection and also determine the current supplied by the battery. Given*

R_a = 15 ohm, R_b = 20 ohm, R_c = 45 ohm, R_d = 18 ohm and R_e = 5 ohm.

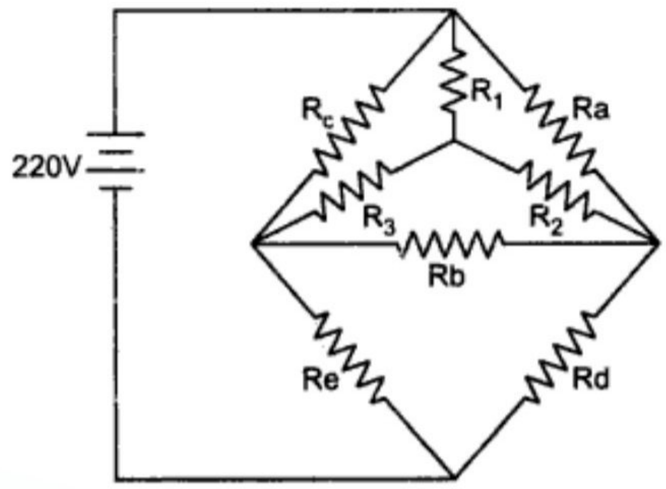

Solution : From delta to star

$$R_1 = \frac{R_a \cdot R_c}{R_a + R_b + R_c} = \frac{15 \times 45}{15 + 20 + 45} = \frac{675}{80} = 8.43 \text{ ohm}$$

$$R_2 = \frac{R_a \cdot R_b}{R_a + R_b + R_c} = \frac{15 \times 20}{15 + 20 + 45} = \frac{300}{80} = 3.75 \text{ ohm}$$

$$R_3 = \frac{R_b \cdot R_c}{R_a + R_b + R_c} = \frac{20 \times 45}{15 + 20 + 45} = \frac{900}{80} = 11.25 \text{ ohm}$$

The equivalent resistance of shown network is

$$R = R_1 + \frac{(R_2 + R_d)(R_3 + R_e)}{R_2 + R_d + R_3 + R_e}$$

$$= 8.43 + \frac{(3.75 + 18)(11.25 + 5)}{3.75 + 18 + 11.25 + 5}$$

$$= 8.45 + \frac{21.75 \times 16.25}{38} = 8.45 + 9.30$$

$$R = 17.73 \text{ ohm.}$$

$$I = \frac{220}{17.75} = 12.39 \text{ amperes.}$$

Example 2 : *Node Analysis : Find the current through the resistor r_2 by nodal method in given figure (1)*

Bahan dengan hak cipta
Downloaded From : www.EasyEngineering.net

Downloaded From : www.EasyEngineering.net

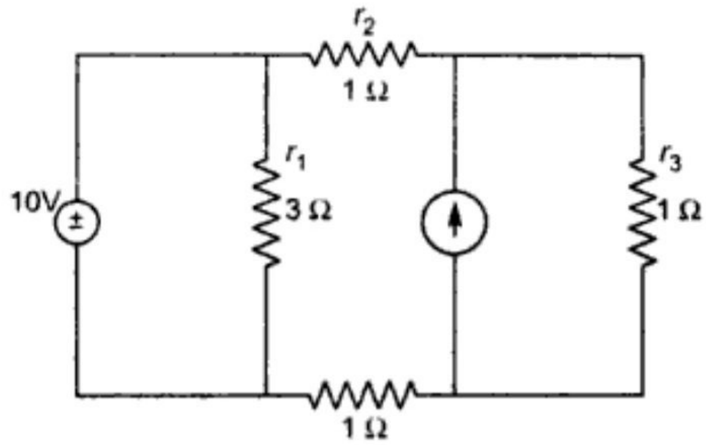

Fig. 1

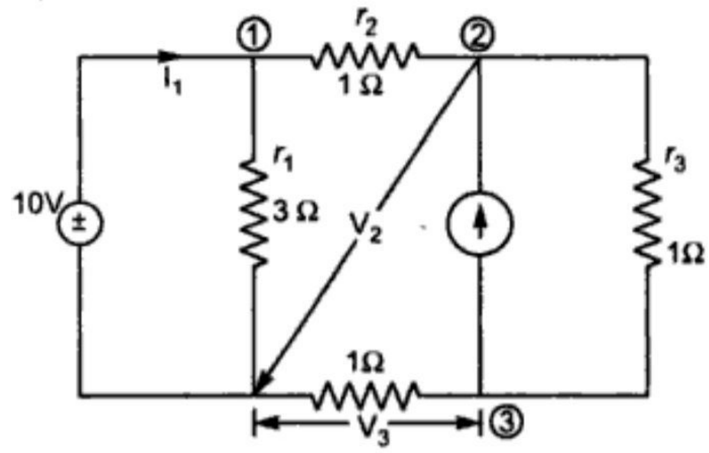

Fig. 2

Solution : Figure (1) can be redrawn as in Fig. (2) and find the current using node voltage.

At node (1),

$$I_1 = \frac{10}{r_1} + \frac{10 - V_2}{r_2} = \frac{10}{3} + \frac{10 - V_2}{1}$$

$$I_1 = 3.33 + \frac{10 - V_2}{1}$$

$$= 3.33 + 10 - V_2$$

$$V_2 + I_1 = 13.33 \qquad \text{... } (i)$$

At node (2),

$$\frac{V_2 - 10}{r_2} + \frac{V_2 - V_3}{r_3} = 10$$

$$\frac{V_2 - 10}{1} + \frac{V_2 - V_3}{1} = 10$$

$$= V_2 - 10 + V_2 - V_3 = 10$$

$$2V_2 - V_3 = 20 \qquad \text{... } (ii)$$

At node (3),

$$\frac{V_3 - V_2}{r_3} + \frac{V_3}{r_4} = +10 = 0$$

or, $$V_3 - V_2 + V_3 + 10 = 0$$

$$2V_3 - V_2 = -10 \qquad \text{... } (iii)$$

From equation (*iii*)

$$V_3 = \frac{V_2 - 10}{2} \qquad \text{... } (iv)$$

Now from equation (*iv*), putting value of V_3 in (*ii*), we get

$$2V_2 - \frac{(V_2 - 10)}{2} = 20$$

Bahan dengan hak cipta
Downloaded From : www.EasyEngineering.net

Downloaded From : www.EasyEngineering.net

$$4V_2 - V_2 + 10 = 40$$
$$3V_2 = 30$$
$$V_2 = 10\text{ V}$$

So, the current through resistor r_2 will be

$$\frac{V_2 - 10}{r_2} = 0$$

Current through $r_2 = 0$ A.

Example 3 : *Calculate the voltage V by mesh method such that the current through 5 V source is zero Fig. (1)*

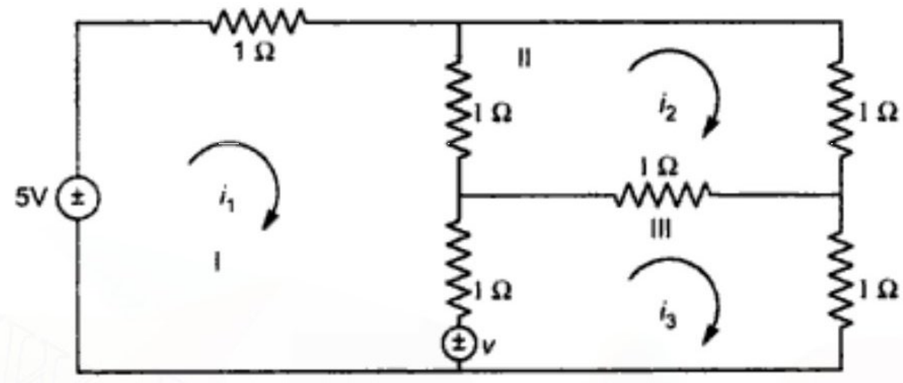

Fig. 1

Solution : In loop I, $-5 + i_1 \times 1 + (i_1 - i_2)\,1 + (i_1 - i_3)\,1 + V = 0$

or, $$3i_1 - i_2 - i_3 = -V + 5 \quad \text{... (1)}$$

In loop II,

$$i_2 \times 1 + (i_2 - i_3)\,1 + (i_2 - i_1)\,1 = 0$$

or, $$3i_2 - i_1 - i_3 = 0$$
$$-i_1 + 3i_2 - i_3 = 0 \quad \text{... (ii)}$$

In loop III,

$$(i_3 - i_2)\,i + i_3 \times 1 - V + (i_3 - i_1)\,1 = 0$$
$$-i_1 - i_2 + 3i_3 = V \quad \text{... (iii)}$$

According to the equation, $i_1 = 0$

(i_1 being the current thorugh 5 V source)

Therefore, equation (*i*), (*ii*) and (*iii*) becomes

$$-i_2 - i_3 + V = 5 \quad \text{... (iv)}$$
$$3i_2 - i_3 = 0 \quad \text{... (v)}$$
$$-i_2 + 3i_3 = V \quad \text{... (vi)}$$

From equation (*iv*) and (*vi*), we get

$$-4i_3 = 5 - 2V \quad \text{... (vii)}$$

and from equation (*v*) and (*vi*),

Bahan dengan hak cipta
Downloaded From : www.EasyEngineering.net

Downloaded From : www.EasyEngineering.net

$$i_3 = \frac{3}{8}\text{ V} \qquad \ldots (viii)$$

using equation (*viii*) in (*vii*)

$$-4 \times \left(\frac{3}{8}\text{V}\right) = 5 - 2\text{V}$$

or, $$-\frac{3}{2}\text{V} = 5 - 2\text{V}$$

or, $$\text{V} = 10 \text{ volts.}$$

Example 4 : *Thevenin's theorem.* *In the circuit of figure (a), find the power loss in 1 Ω resistor by Thevenin' theorem.*

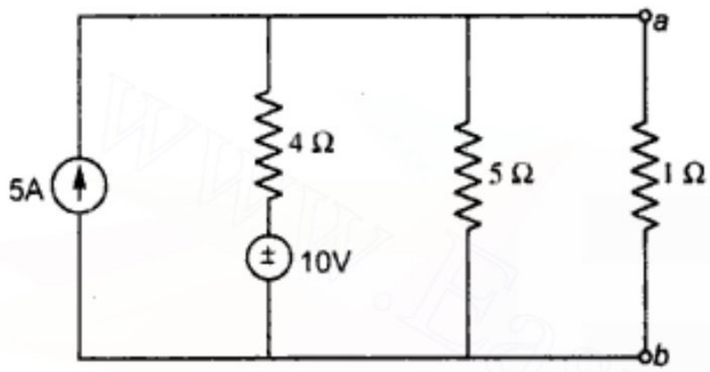

Fig. (*a*)

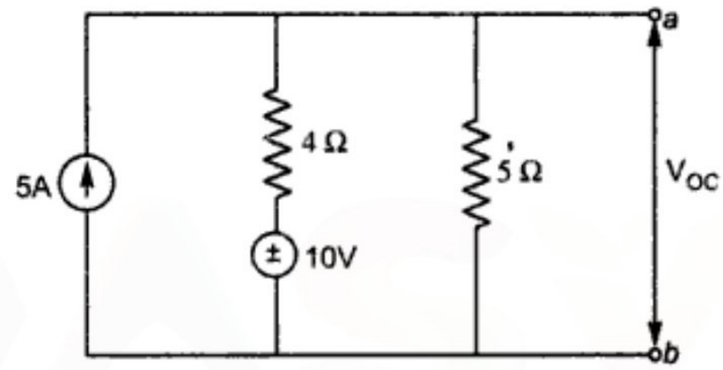

Fig. (*b*)

Solution :- Let us remove the load resistance (1 Ω) from $a - b$ terminal as shown in figure (*b*). Applying KCL at node a, we get

$$\frac{V_{oc}}{5} + \frac{V_{oc} - 10}{4} = 5$$

$$4\,V_{oc} + 5\,(V_{oc} - 10) = 20 \times 5$$

$$4V_{oc} + 5V_{oc} - 50 = 100$$

$$9V_{oc} = 150$$

$$V_{oc} = \frac{150}{9} = 1.67$$

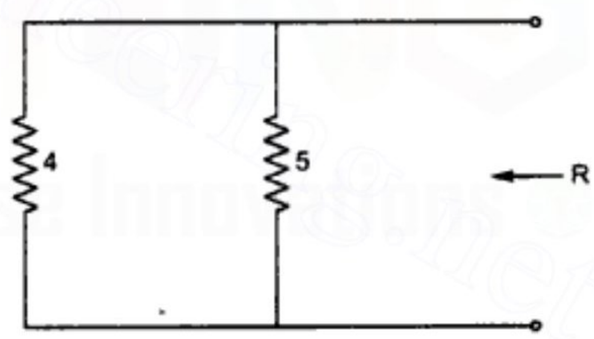

Fig. (c)

Figure shows the circuit with independent sources deactivated

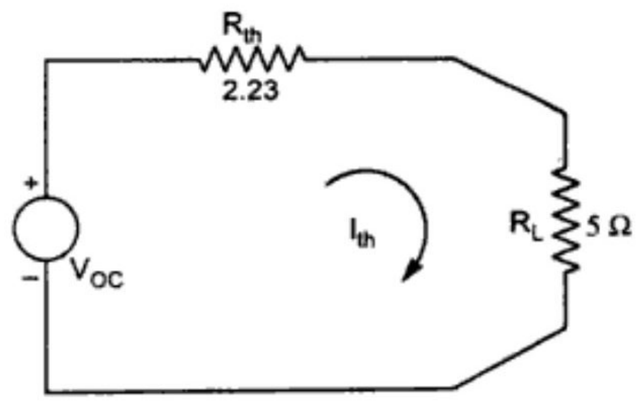

Fig. (*d*)

Bahan dengan hak cipta
Downloaded From : www.EasyEngineering.net

Downloaded From : www.EasyEngineering.net

$$R_{th} = \frac{4 \times 5}{4+5} = \frac{20}{9} = 2.23\ \Omega$$

$$I_{th} = \frac{V_0 C}{R_{th} + R_L} = \frac{1.67}{2.23+1} = \frac{1.67}{3.23} = 5.17 \text{ amperes.}$$

Power loss in 1 Ω resistor

$$= (5.17)^2 \times 1 = 2.67\ \Omega$$

Example 5 : *In the given network as shown below, find the current through the 6 Ω resistor using thevenin's theorem.*

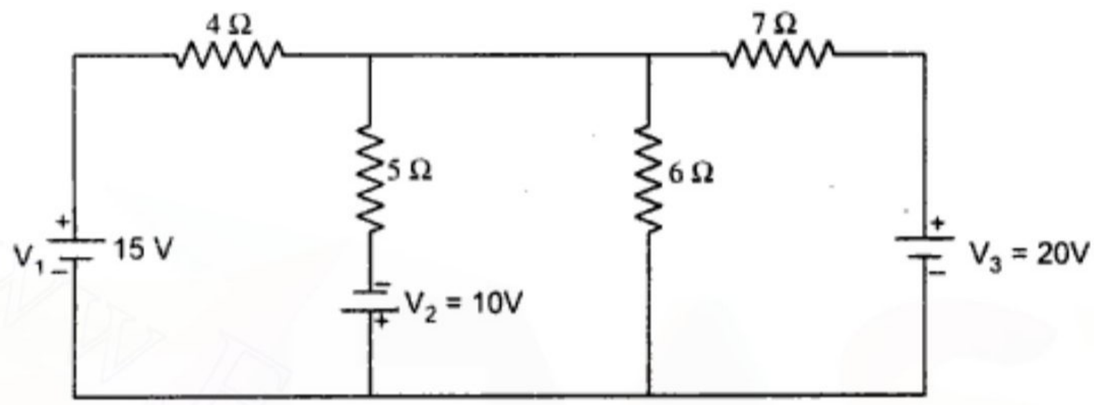

Solution :- Redrawing above circuit and removing the resistance of 6 Ω as open circuit, we get

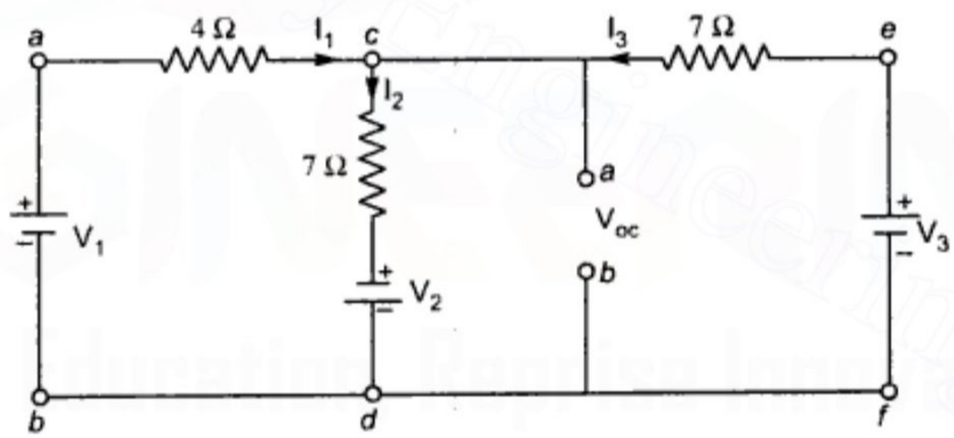

Applying KCL at node C, we get

$$I_1 + I_3 - I_2 = 0$$

$$\frac{(V_1 - V_{oc})}{4} + \frac{(V_3 - V_{oc})}{7} - \frac{(V_{oc} + V_2)}{5} = 0$$

$$\frac{35(V_1 - V_{oc}) + 20(V_3 - V_{oc}) - 28(V_{oc} + V_2)}{140} = 0$$

$$35V_1 - 35V_{oc} + 20V_3 - 20V_{oc} - 28V_{oc} - 28V_2 = 0$$

$$\Rightarrow \quad 35V_1 + 20V_3 - 28V_2 - 83V_{oc} = 0$$

$$\Rightarrow \quad 35V_1 - 28V_2 + 20V_3 = 83V_{oc} \qquad \text{... (1)}$$

Putting value of V_1, V_2 and V_3 in (1)

Copyrighted material
Downloaded From : www.EasyEngineering.net

Downloaded From : www.EasyEngineering.net

$$35 \times 15 - 28 \times 10 + 20 \times 20 = 83V_{oc}$$

$$525 - 280 + 400 = 83V_{oc}$$

$$83V_{oc} = 645$$

$$V_{oc} = \frac{645}{83} = 7.77 \text{ volts.}$$

Now, for calculating R_{th} we open voltage source as shown below :

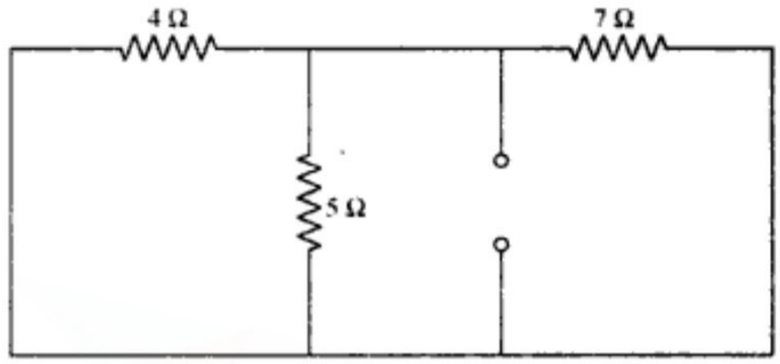

Here,
$$\frac{1}{R_{th}} = \frac{1}{4} + \frac{1}{5} + \frac{1}{7}$$

$$= \frac{35 + 28 + 20}{140} = \frac{83}{140}$$

$$R_{th} = \frac{140}{83} = 1.68\ \Omega$$

Current through resistor of 6 Ω is

$$I_{th} = \frac{V_{oc}}{R_{th} + R_L} = \frac{7.77}{1.6 + 6}$$

$$= \frac{7.77}{7.6} = 1.02 \text{ A}$$

Superposition Theorem

Example 1 : *Using supesrposition theorem, find the currents in the different branches of network shown below :*

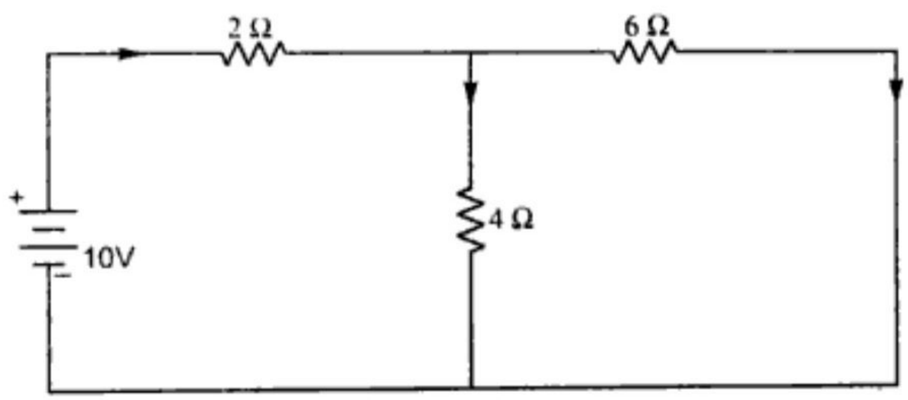

Solution : In superposition theorem, the circuit above is drawn with one voltage source while other is open circuited.

Copyrighted material
Downloaded From : www.EasyEngineering.net

Downloaded From : www.EasyEngineering.net

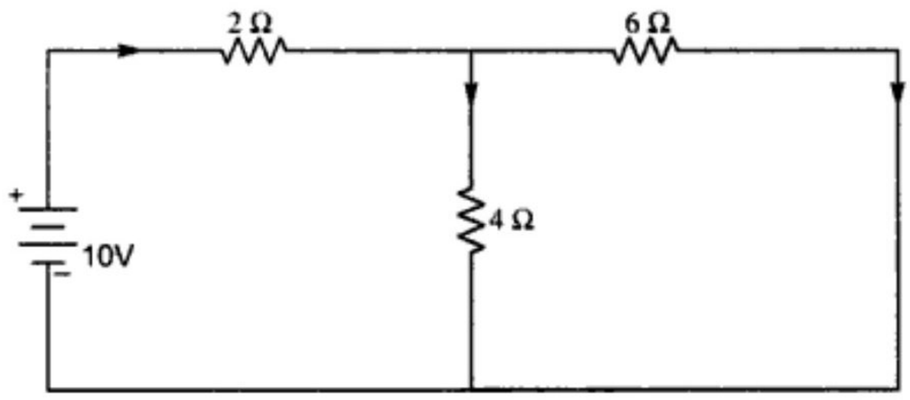

Considering V_1 source only, the total resistance is circuit (2)

$$= 2 + \frac{4 \times 6}{4 + 6} = 2 + \frac{24}{10} = 4.4\ \Omega$$

Current through 2 Ω resistor $= \dfrac{10}{4.4} = 2.27$ A

Current through 6 Ω resistor $= 2.27 \times \dfrac{4}{4+6}$

$$= 2.27 \times 0.4 = 9.09 \text{ A}$$

Current through 4 ohm resistor

$$= 9.09 - 2.27 = 6.82 \text{ A.}$$

Now, considering voltage source V_2 and open circuiting V_1 the circuit becomes

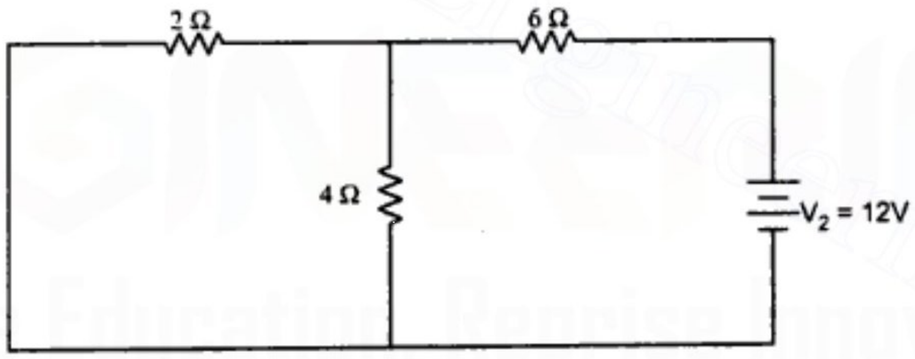

Total resistance $= 6 + \dfrac{4 \times 2}{4 + 2} = 6 + \dfrac{8}{6}$

$$= 6 + 1.34 = 7.34\ \Omega$$

Current through 6 ohm resistor $= \dfrac{12}{7.34} = 1.63$ A

Current through 2 ohm resistor $= 1.63 \left[\dfrac{4}{6}\right] = 1.08$ A

Current through 4 ohm resistor $= 1.63 \left[\dfrac{2}{6}\right] = 5.43$ A

Total current in different branches are

Current through 4 Ω resistor $= 6.82 - 5.43 = 1.39$ A

Copyrighted material
Downloaded From : www.EasyEngineering.net

Downloaded From : www.EasyEngineering.net

Current through 2 Ω resistor = 2.27 – 1.08 = 1.19 A

Current through 6 Ω resistor = 9.09 + 1.63

= 10.72 A

Example 2 : *Find V in the circuit of figure (a) using superposition theorem.*

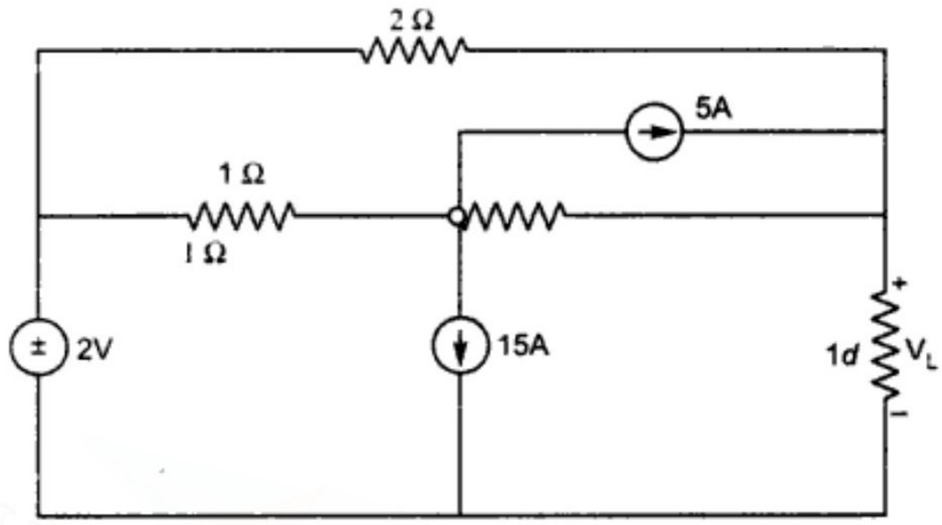

Fig. (a)

Solution : We consider 2V source first while other sources are removed (voltage source short circuited and the current source open circuited).

$$i_1 = \frac{2}{\frac{2 \times 2}{2+2} + 1} = 1 \text{ A}$$

∴ V_1 (drop across r_L due to 2V source) = 1 × 1 = 1V.

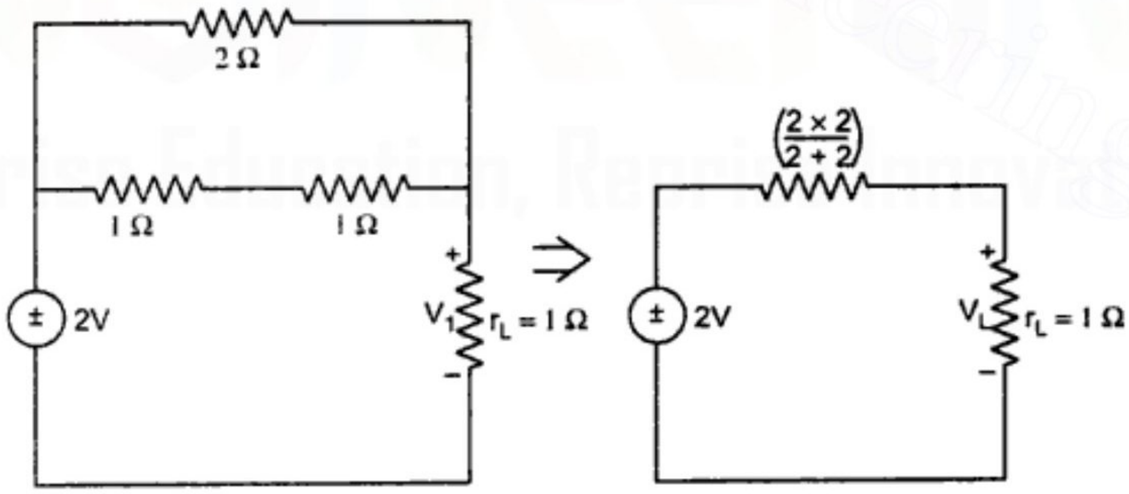

Fig. (b)

Taking the lower current source only

Copyrighted material
Downloaded From : www.EasyEngineering.net

Downloaded From : www.EasyEngineering.net

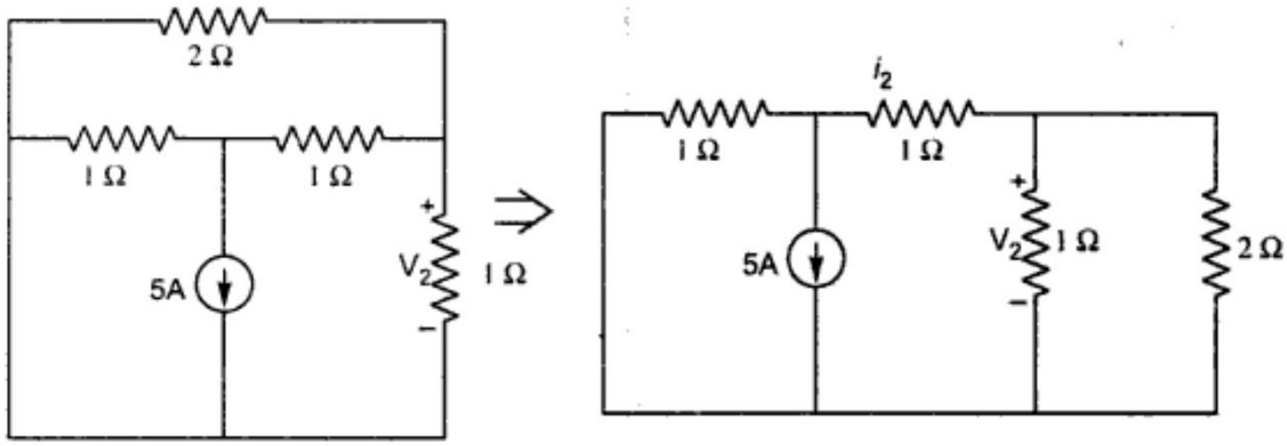

Fig. (c)

$$i_2 = (-5)\frac{1}{1+1+\frac{2}{3}} = (-5)\frac{3}{8} = -\frac{15}{8}\text{ A}$$

$$\therefore \qquad i_3 = -\left(\frac{15}{8}\right)\frac{2}{1+2} = -\left(\frac{15}{8}\right)\frac{2}{3} = -\frac{5}{4}\text{ A}$$

The results V_2 as

$$V_2 = -\frac{5}{4}\times 1 = -\frac{5}{4}\text{ V}$$

In below drawn figure (*d*),

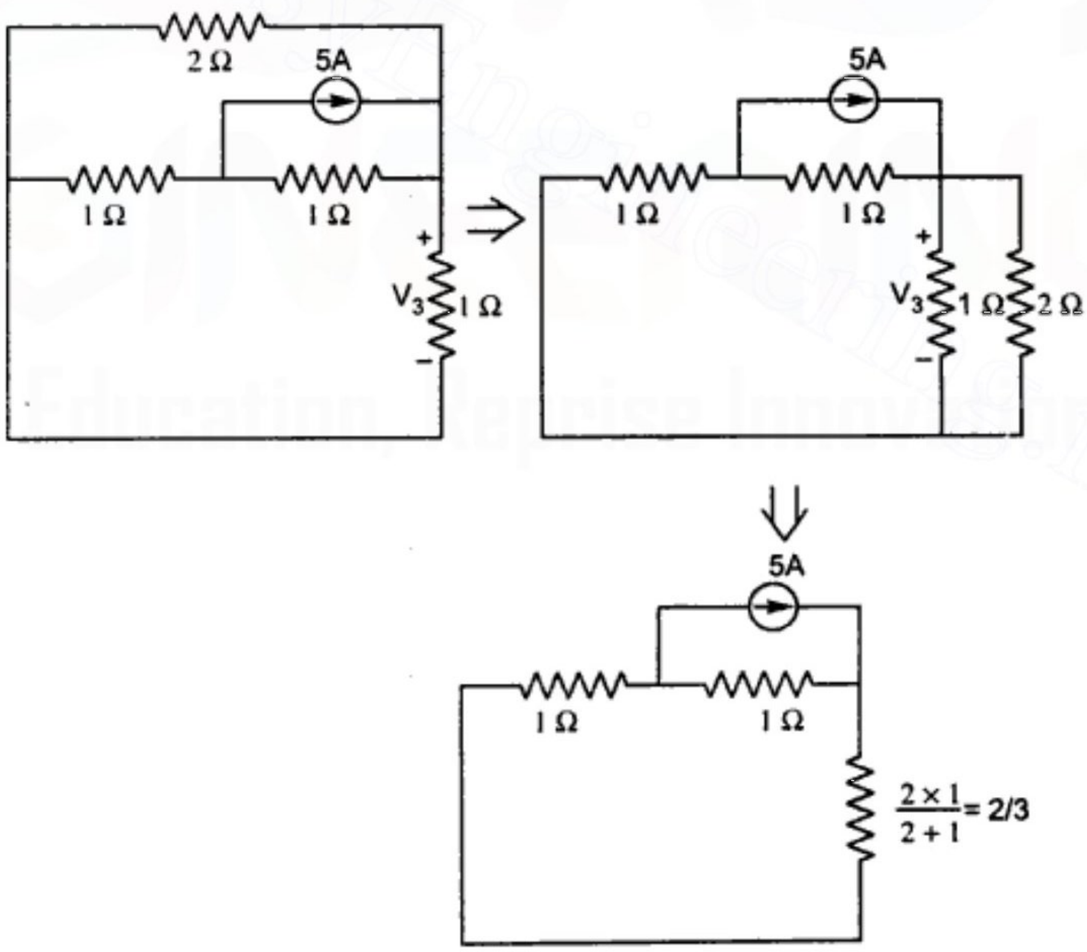

Fig. (d)

Copyrighted material
Downloaded From : www.EasyEngineering.net

Downloaded From : www.EasyEngineering.net

$$\frac{2\times 1}{2+1} = \frac{2}{3}$$

$$i_4 = 5 \times \frac{1}{\frac{2}{3}+1} = \frac{15}{5} = 3\text{A}$$

This gives $$i_{r_L} = 3 \times \frac{2}{2+1} = 2\text{A}$$

$\therefore$ $$V_3 = 2 \times 1 = 2\text{V}$$

According to superposition theorem

$$V = V_1 + V_2 + V_3$$

$$= 1 + \left(-\frac{5}{4}\right) + 2 = \frac{7}{4}\text{ V} = 1.75\text{ V}$$

Norton's Theorem

Example 1 : *Find Norton's equivalent circuit to the left of terminals a – b in the network shown in figure (a).*

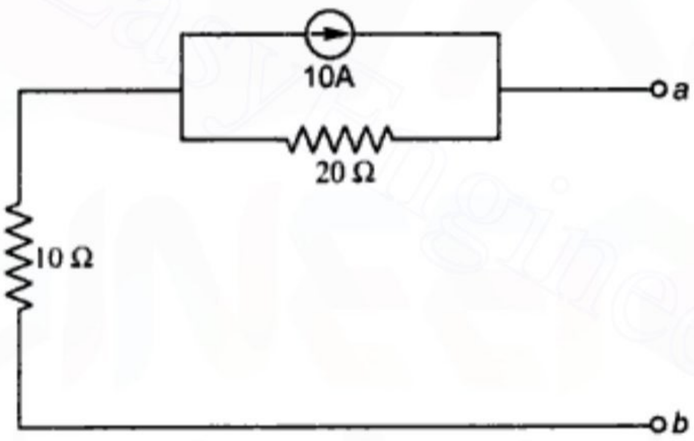

Fig. (a)

Solution : Let us first short the terminals $a - b$ of figure (a)

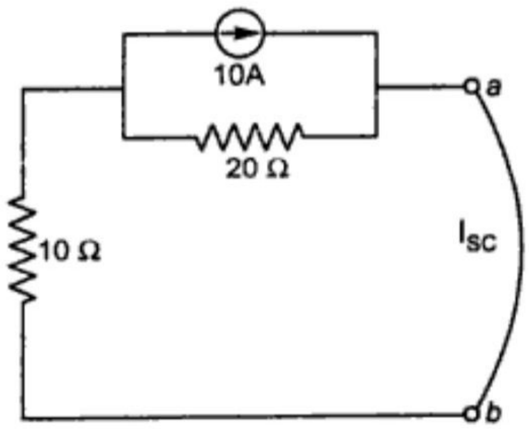

Fig. (b)

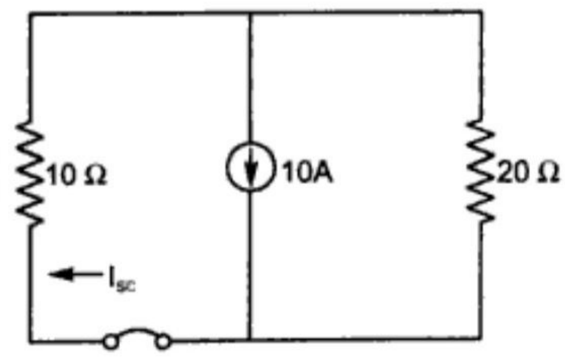

Fig. (c)

Here I_{SC} is the short circuit current through 10 Ω resistor.

Copyrighted material
Downloaded From : www.EasyEngineering.net

Downloaded From : www.EasyEngineering.net

$$\therefore \qquad I_{SC} = 10 \times \frac{20}{10+20} = 10 \times \frac{20}{30} = 6.67 \text{ A}$$

The equivalent resistance of circuit in Fig. (*a*) will be obtained by looking through $a - b$ and the constant source is removed as shown below :

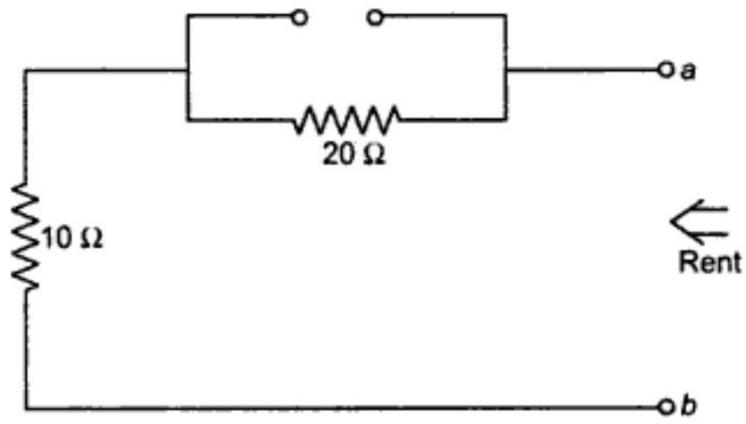

Fig. (d)

re, $\qquad R_{int} = 10 + 20$

$\qquad\qquad = 30\,\Omega$

Norton's equivalent circuit is drawn as below :

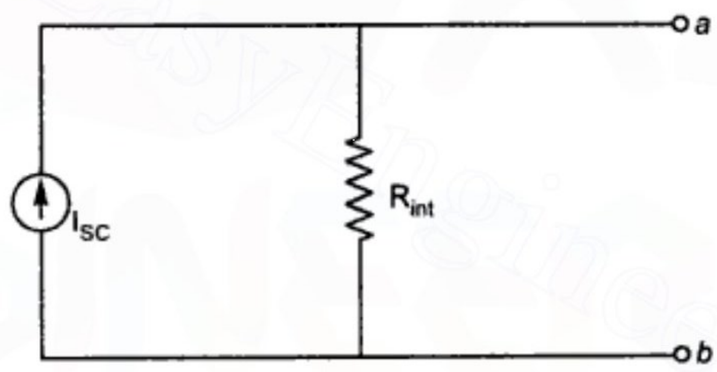

Fig. (e)

Therefore, $\qquad I_N = I_{SC} = 6.67$ A

Example 2 : *Find Norton's equivalent circuit across x – y for the network shown below in figure (a)*

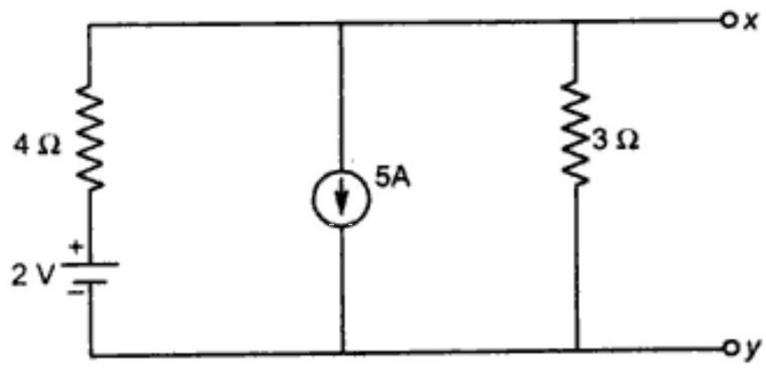

Fig. (a)

Simplifying figure (*a*)

Copyrighted material
Downloaded From : www.EasyEngineering.net

Downloaded From : www.EasyEngineering.net

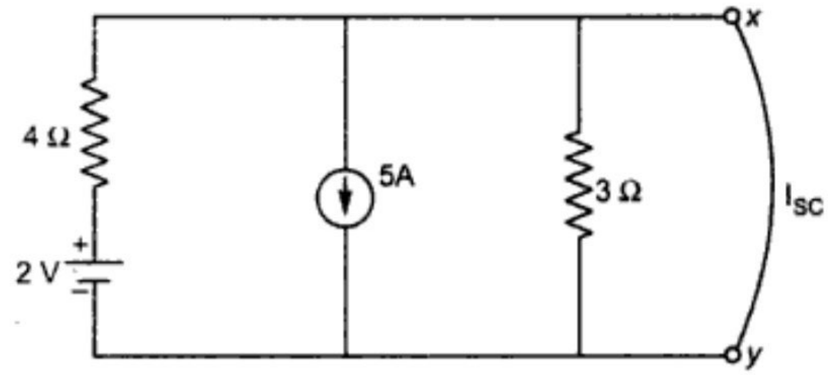

Fig. (b)

Solution : At first step, terminal $x - y$ is short-circuited and the 3 Ω resistor is then by passed and circuit in figure (*b*) becomes,

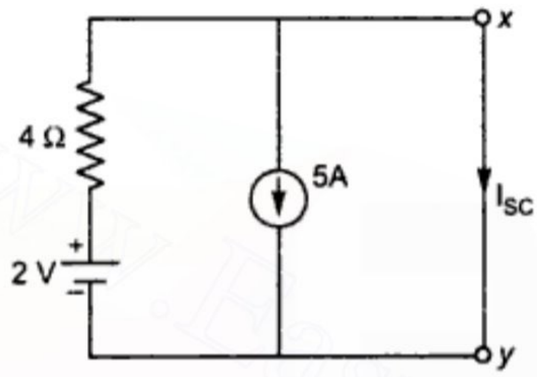

Fig. (c)

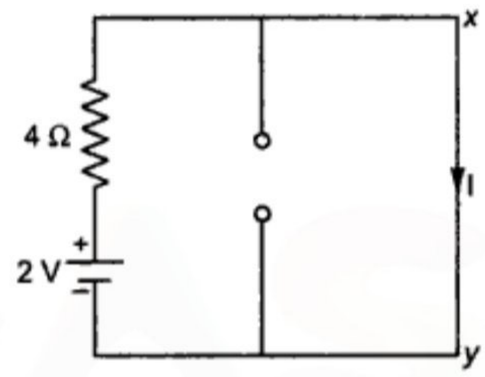

Fig. (d)

Considering 2V source (figure *d*)

$$2 = 4 \times I'_{SC}$$

$$\therefore \quad I'_{SC} = \frac{2}{4} = 0.5$$

Now, considering 5A source only as shown in figure (*e*)

$$I''_{SC} = -5A$$

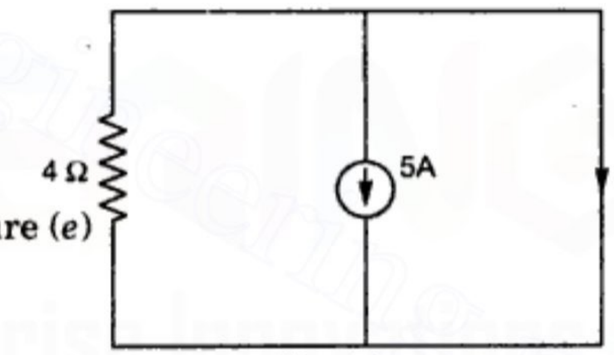

Fig. (e)

Using superposition theorem,

$$I_{SC} = I'_{SC} + I''_{SC} = 0.5 - 5 = -4.5 \text{ A}$$

For obtaining equivalent resistance R_{int}, all the sources in the given network are removed shown in figure (*f*),

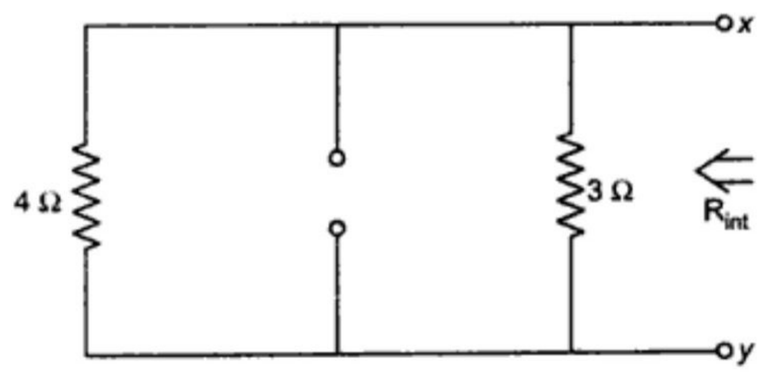

Fig. (f)

So,

$$R_{int} = \frac{4 \times 3}{4 + 3} = \frac{12}{7} = 1.72\ \Omega$$

Copyrighted material
Downloaded From : www.EasyEngineering.net

Downloaded From : www.EasyEngineering.net

Norton's equivalent circuit can be drawn as

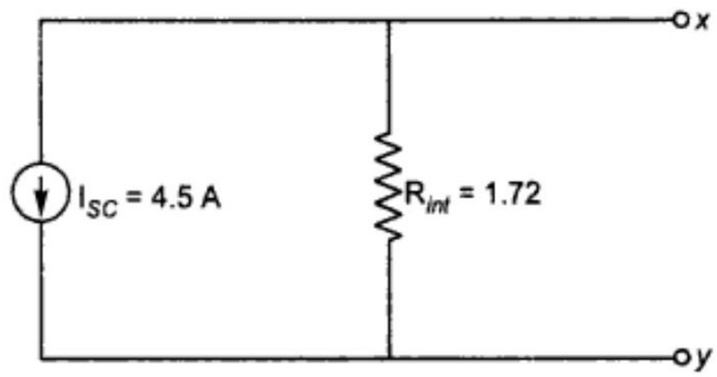

Fig. (g)

EXERCISES

1. State and prove superposition theorem.

(*a*) In the circuit shown below. Calculate current I using superposition theorem.

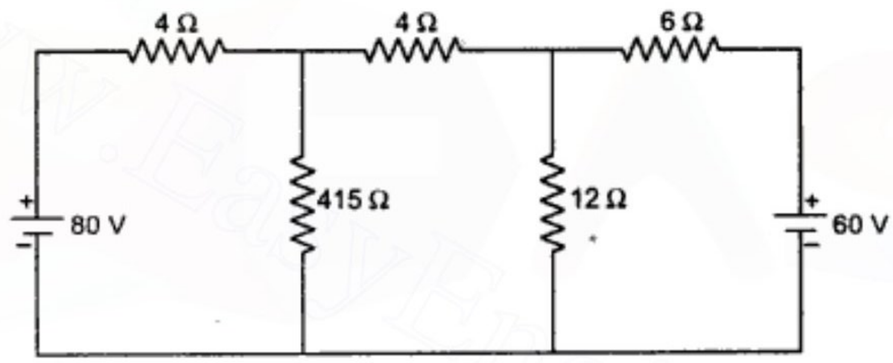

(*b*) Calculate current I in the given circuit using superposition theorem.

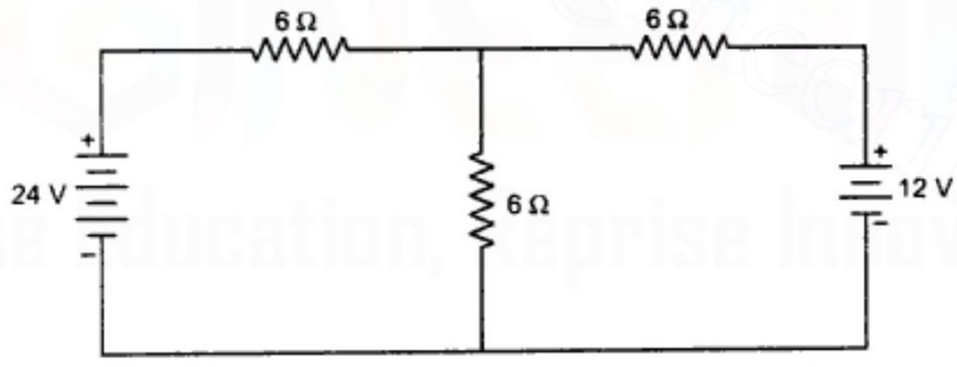

2. Explain the statement of Thevenin's theorem. Also obtain the expression for I_{th}.

(*a*) Using Thevenin's theorem, find the current I in the figure shown below :

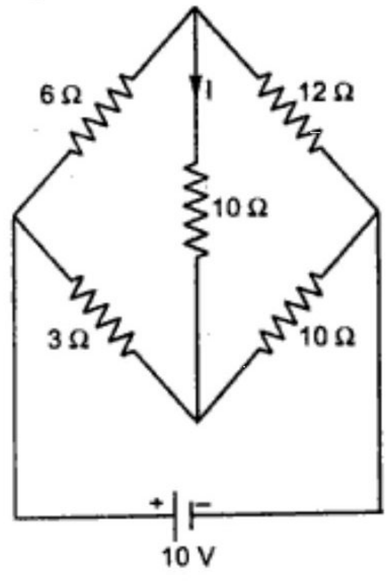

Copyrighted material
Downloaded From : www.EasyEngineering.net

Downloaded From : www.EasyEngineering.net

(*b*) Determine the current flowing through 5 Ω resistor in the network shown below using Thevenin's theorem.

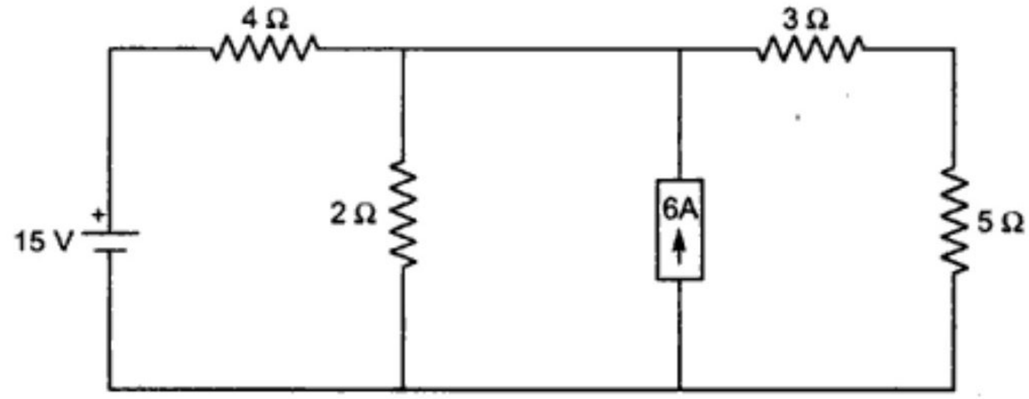

3. (*i*) Consider figure shown below, which shows me node of an electric circuit. Find V_4 using KCL, the given parameters are $V_2 = 5e^{-2t}$, $V_3 = 2e^{-2t}$, $i_1 = 2e^{-2t}$.

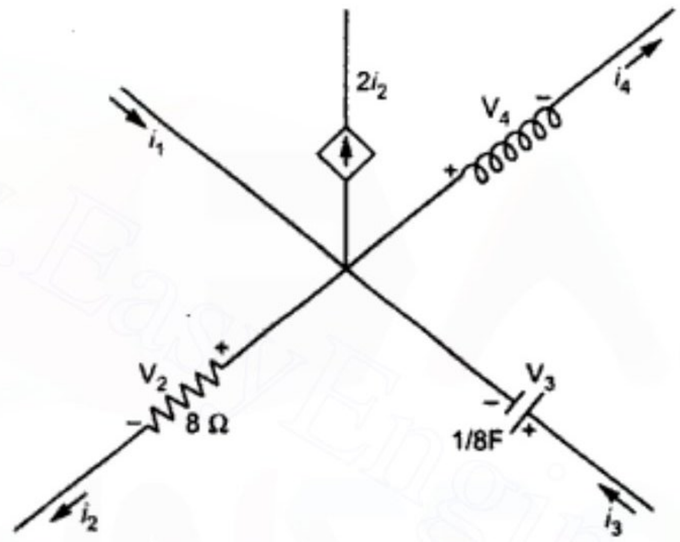

(*ii*) The voltage and current through a circuit element are :

$$V = 100 \sin (314t + 45°) \text{ volt}$$

$$i = 10 \sin (314t + 315°) \text{ amperes.}$$

(*a*) Identify the circuit element.
(*b*) Find its value.
(*c*) Obtain expression for power.

4. Verify maximum power transfer theorem for d.c. network with its statement.

Find the value of R in the given circuit such that the maximum power transfer takes place.

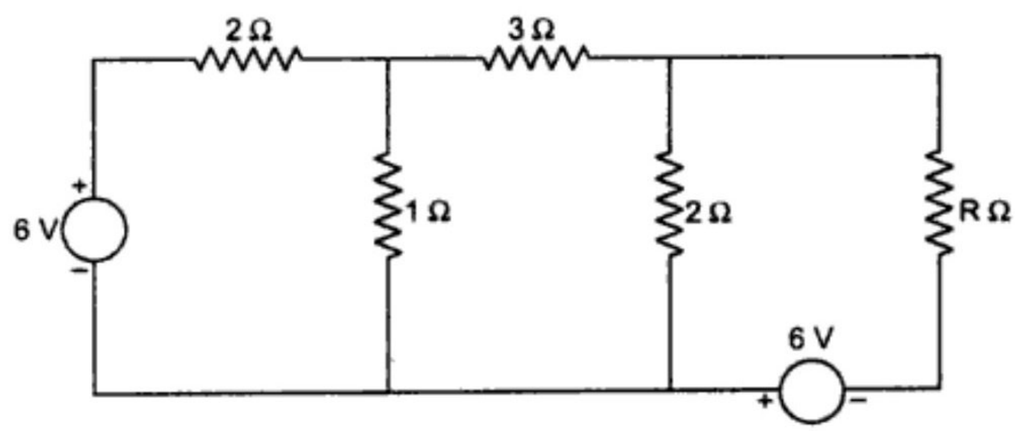

Materiál chránený autorským právom
Downloaded From : www.EasyEngineering.net

Downloaded From : www.EasyEngineering.net

5. Using Wye-Delta transformation to obtain the resistance betwen the terminal a-b of the circuit shown below. All the resistances are in ohms.

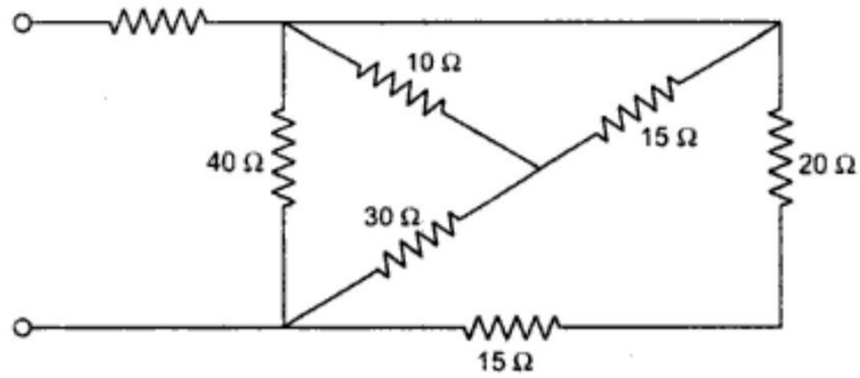

6. Derive Norton's equivalent circuit and find the current through 15 ohm resistance shown in figure. Also state Norton's theorem.

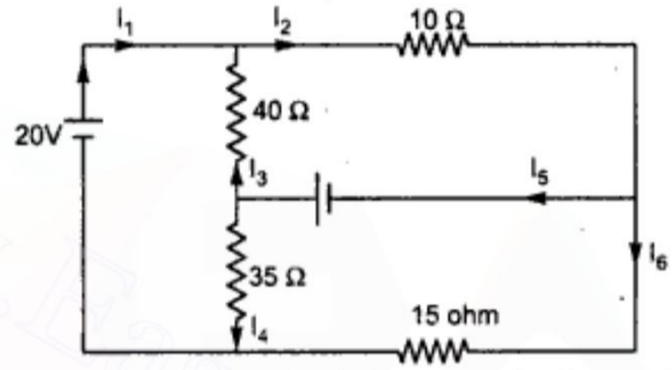

7. State Millman's theorem and also reduce the circuit shown in figure to a single current generator. Where all the resistances are in ohms.

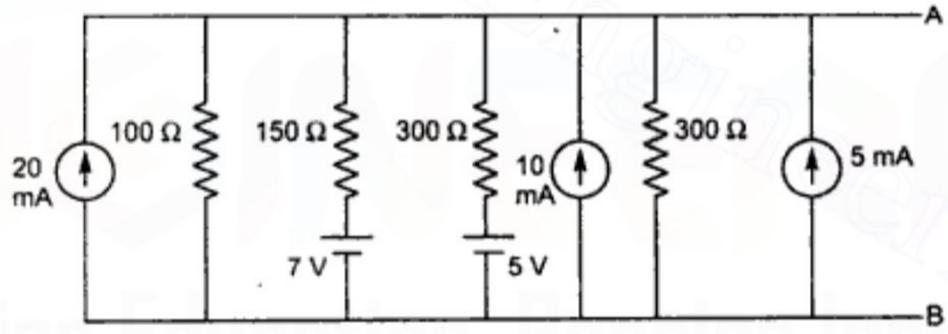

8. A delta network has the resistance values of 10 Ω, 20 Ω, and 30 Ω. Find the parameters of equivalent wye.
9. State the Telleven's theorem and verify its expression.
10. What is an 'electrical circuit'? Give its type with suitable example.
11. What do you understand by 'Electrical Network'? What are the various differences between active and passive network?
12. Explain the following :
    (*i*) Node (*ii*) Branch (*iii*) Loop (*iv*) Mesh
13. What is difference between Ideal Voltage and Ideal Current Source ?
14. Explain the two methods of network analysis?
15. Explain Kirchhoff's Current Law and verify that Incoming Current = Outgoing Current.
16. What are the two laws of Kirchhoff?
17. Give various differences between 'Nodal and 'Mesh' analysis?
18. What is the importance of Cramer's rule in network analysis.
19. Norton's theorem is called as dual of thevenen's theorem. Why?
20. What is maximum power transfer theorem?
21. What are the basic differences between node current and mesh current?

Materiál chránený autorským právom
Downloaded From : www.EasyEngineering.net

Downloaded From : www.EasyEngineering.net

UNIT II

3

Electromagnetism

Introduction

An iron core called magnetite (Fe_3O_4) possesses the property of attracting small pieces of iron. The bodies, which exhibit the property of attracting small pieces of iron. The bodies, which exhibit the property of attracting iron, are generally termed as magnets. These are classified in two types: (1) Natural magnets (2) Artificial magnets. Artificial magnet can be prepared either by rubbing the iron bar with magnet or by passing an electric current through the wire wound round a iron piece. When a magnet is suspended and free to rotate in a horizontal plane, it comes to rest pointing north and south. The end of the magnet-facing north is called North Pole, where as that faces south is known as a south pole. A line joining these two poles is termed as magnetic axis.

Magnetic Field

When there is an electric current in a conductor magnetic forces are produced surrounding the conductor. The area around a magnetic pole or a magnet with its influence is perceptible is called its magnetic field. A magnetic field is a condition of space ; it is shown by hypothetical magnetic lines. These lines of force travel from the north to South Pole as shown in Fig. 1. The magnetic lines always form closed loops.

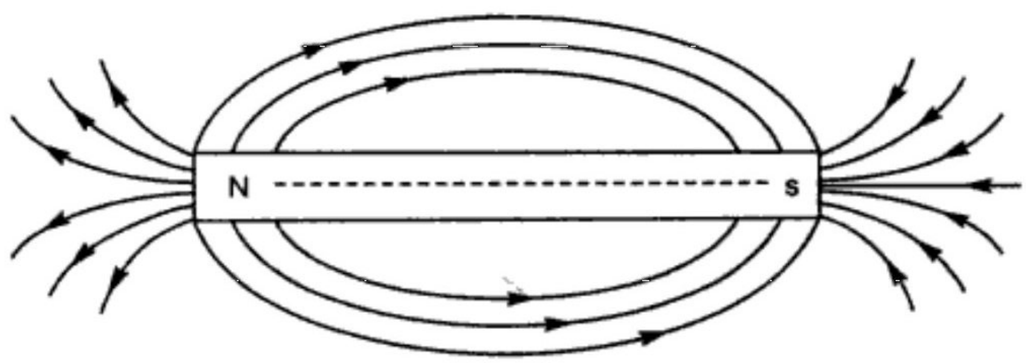

Fig. 1. *External lines of force due to small bar magnet.*

Magnetic Flux

The total number of lines of force in the magnetic field is called the magnetic flux. It is denoted by a symbol Φ. The unit of magnetic flux is Weber (Wb). The lines of magnetic flux have no physical existence. The concept of these flux lines is purely hypothetical and was

Copyrighted material
Downloaded From : www.EasyEngineering.net

Downloaded From : www.EasyEngineering.net

introduced by Faraday as a pictorial method of representing the distribution and density of a magnetic field. Lines of magnetic flux posses the following properties:

1. They form closed loops.
2. They always start from the North Pole and end in South Pole and are then continuous through the body of magnet.
3. They never intersect each other.
4. Lines of forces are like stretched lash cords, tending to contract lengthwise.
5. Lines of force exert lateral pressure *i.e.* they tend to bulge outside ways.
6. Lines of magnetic flux that are parallel and in the same direction repel each other.

Magnetic Flux Density

Magnetic flux density is defined as the magnetic flux per unit area of a surface at right angle to the magnetic field. This is also known as magnetic induction. Its symbol is B and measured in Weber per square-meter or Tesla.

$$\Phi = B.A\,(Wb)$$

or,

$$B = \frac{\Phi}{A}\frac{Wb}{m^2} \text{ or Tesla}$$

Φ = magnetic field

B = Flux density

A = Surface area

Direction of Current in a Conductor

It is convenient to show the cross section of a conductor instead by showing the conductor as a whole. The current direction is represented by an arrow. Consider an arrow AB as shown in Fig. (2) The current is coming towards point B.

Fig. 2 : *Direction of current in a conductor.*

○ Conductor with no current

⊙ Conductor carrying current towards the observe

⊗ Conductor carrying current away from the observer.

Hence a dot within the conductor represents the current coming towards the observer. An observer towards end A shows the tail or crossed features of the arrow. The current is going away from the observer; hence the cross within a conductor represents the current going away from observer.

Magnetic Field due to a Current Carrying Conductor

When a conductor carries an electric current a magnetic field is produced all along its length, the lines of magnetic flux being concentric circles in planes at right angles to the conductor. The magnetic field associated with a current carrying conductor depends upon the magnitude of current and also on the direction of flow of current.

Copyrighted material
Downloaded From : www.EasyEngineering.net

Downloaded From : www.EasyEngineering.net

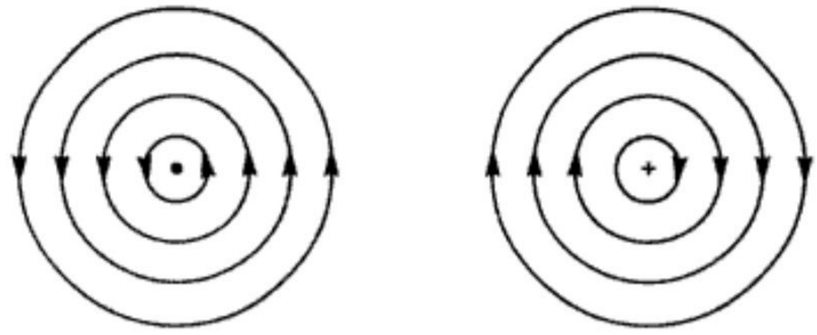

Fig. 3 : *Magnetic field around a current carrying conductor.*

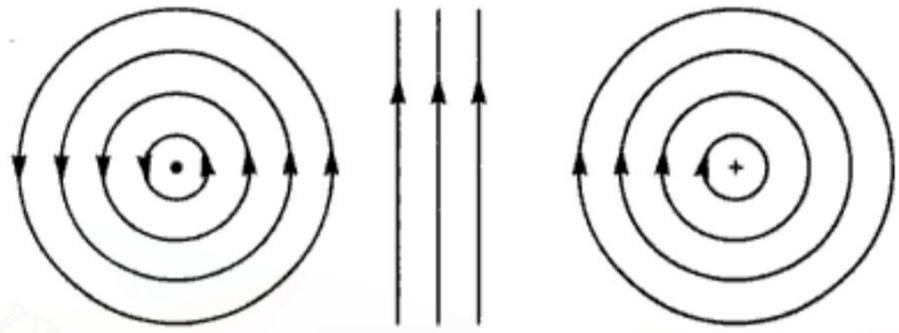

Fig. 4 : *Resultant flux distribution (Opposite direction).*

The two conductors shown in Fig. 4 Carry the same current in opposite directions and their fields so produced have different directions. If these two conductors are laid side by side, the two fields so produced will cancel each other there by resulting in zero magnetic effect however, it they carry the same current in the same direction the magnetic effect will be twice compared to one such conductor alone.

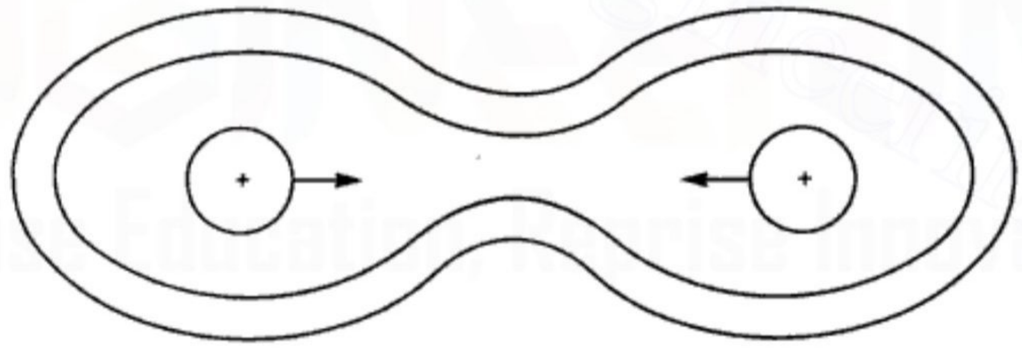

Fig. 5 : *Resultant flux distribution (Same direction).*

Thus we conclude that if there are two conductors carrying current in the same direction there is a force of attraction between them. If the two conductors carrying current in opposite directions there is force of repulsion between them.

Direction of Magnetic Field/Flux

The direction of magnetic field can be found either of the following rules:

Right Hand Rules : Assume that the conductor is be gripped by the right hand in such a way that the thumb points in the direction of current, then the fingers encircling the conductor point in the direction of the magnetic field or flux.

Copyrighted material
Downloaded From : www.EasyEngineering.net

Downloaded From : www.EasyEngineering.net

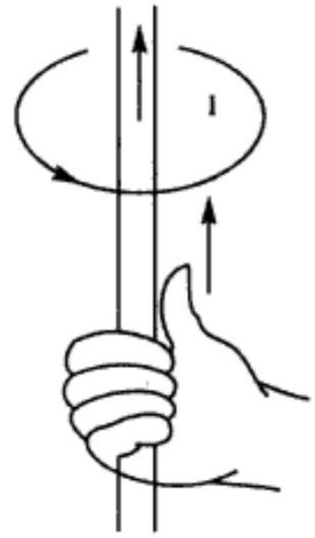

Fig. 6 : *Right hand rule showing direction of field.*

Right Hand Screw Rule : Assume that a right-handed screw along the side of the current carrying conductor. Advance the screw in the direction of current then the direction of the magnetic flux is in the direction; in which the screw has to be turned to move it in the forward direction as shown in Fig. 7.

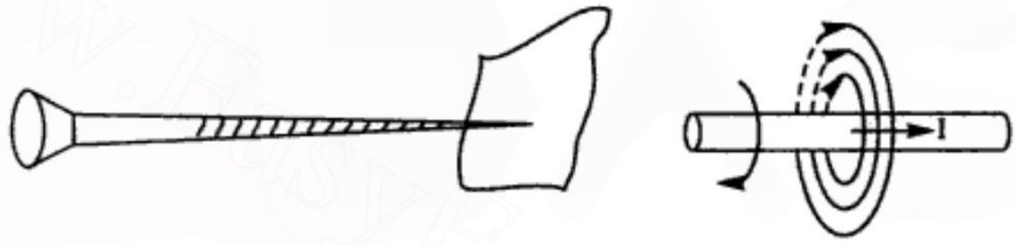

Fig. 7 : *Right hand screw rule.*

Representing of Uniform Magnetic Field

A uniform magnetic field is represented by equally spaced lines as given in Fig. 8.

Fig. 8 : *Uniform magnetic field.*

Flux Distribution of a Single Turn Coil

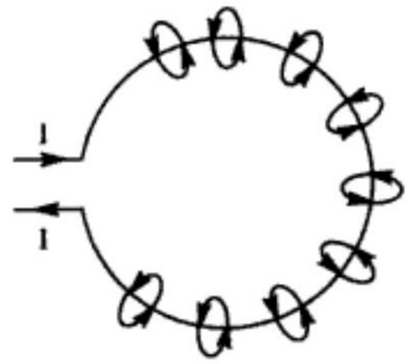

Fig. 9 : *Magnetic field due to single turn conductor carrying current.*

Copyrighted material
Downloaded From : www.EasyEngineering.net

Downloaded From : www.EasyEngineering.net

If a conductor is made into loop and current is passed through it, the magnetic flux lines are concentric circles all along its length as shown in Fig. The direction of field can be determined by right hand rule or right hand screw rule.

Flux Distribution of a Solenoid : A solenoid is a cylindrical coil wound with large number of turns of insulated wire. The length of the solenoid is usually much larger in comparison with its diameter. The magnetic field produced by the solenoid resembles more or less that of a bar magnet as shown in Fig. 10 one end of solenoid becomes a north pole (N) where the flux leaves the solenoid; while other end becomes the south pole (S) where the flux enters in it. The direction of the field inside the solenoid may be found by applying the right hand rule for solenoids this rule states that if a solenoid is gripped with the right hand such that the fingers point in the directions of the current in the wire, then the thumb will point in the directions of magnetic flux.

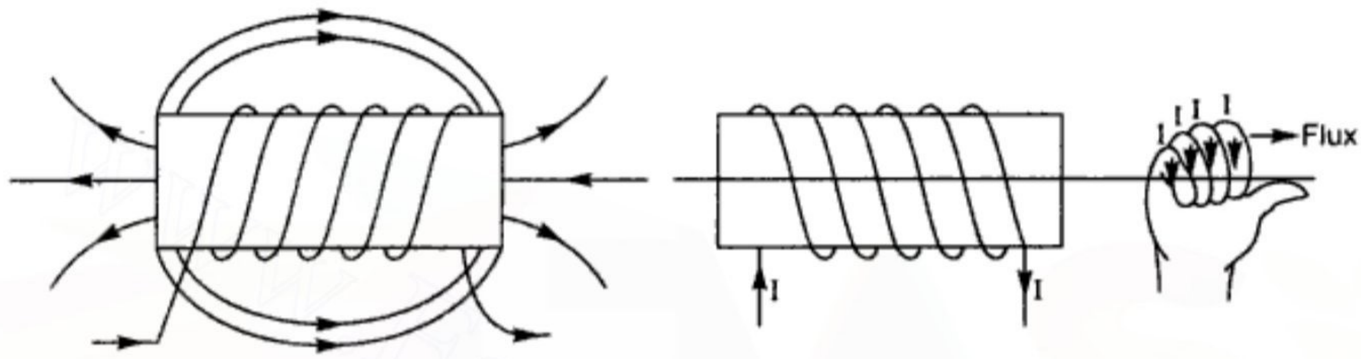

Fig. 10 : *Magnetic field due to current and right hand rule in a solenoid.*

Isolated conductor in a uniform magnetic field : Consider an isolated, long straight conductor carrying current away from the observer placed in a uniform magnetic field acting vertically down wards [Fig. 11] The field due to conductor on its right hand side is in the direction of the main magnetic field. On the left hand side of the conductor the field due to conductor is in a direction opposite to that of main field. Therefore the resultant field is stronger on the right hand side of the conductor and it is weaker on the left hand side of the conductor Fig. The non-uniformity of the magnetic flux on the two sides of the conductor pushes the conductor form stronger flux side to weaker flux side.

If the direction of current is reserved in the conductor, the force produced on the conductor is also reversed.

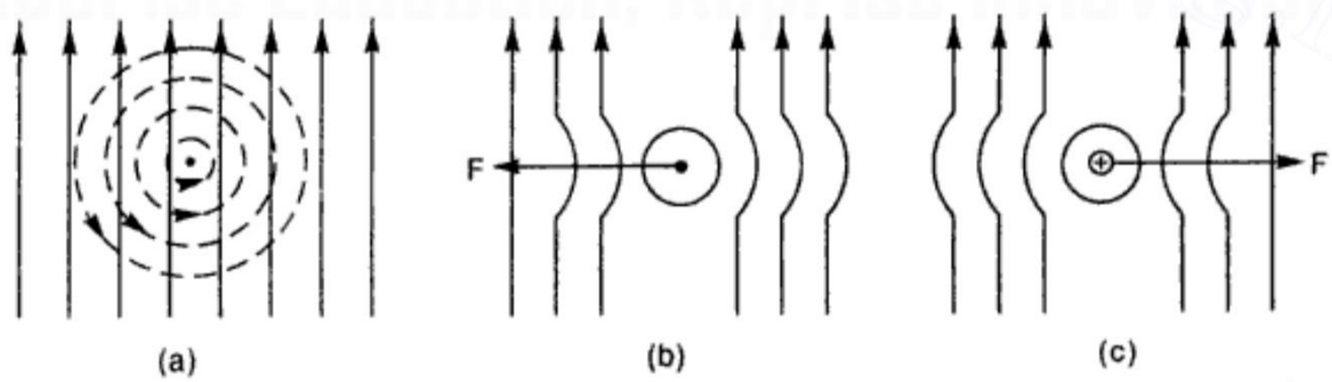

Fig. 11 : *Magnetic field due to an isolated long straight current carrying conductor placed in a uniform field.*

Permeability

A magnetic material when placed in a magnetic field acquires magnetism due to induction. The measure of the degree to which the lines of force of the magnetizing field can penetrate or permeate the medium is called the absolute permeability of the medium. It is devoted by a symbol μ.

Copyrighted material
Downloaded From : www.EasyEngineering.net

Downloaded From : www.EasyEngineering.net

The permeability of all non-magnetic material including air represented by μ_0 equal to $4\pi \times 10^{-7}$ H/m.

The absolute permeability μ of a medium or magnetic material can also be expressed in terms of its relative permeability μ_r and the permeability of free space or air μ_0 *i.e.*

$$\mu = \mu_0 \times \mu_r$$

The relative permeability of a magnetic material may be defined as the ratio of the flux density produced in the material to the flux density produced in vacuum or in a nonmagnetic core, provided the magnetic field strength is same in both the cases. It is denoted by μ_r.

Relation Between Magnetic Flux Density and Field Intensity

At any point in a magnetic field, field strength or field intensity H is the force maintaining the magnetic flux and producing a particular value of flux density B at that point. Hence the field intensity H is cause and the flux density B the effect. Thus the flux density can be assumed proportional to field intensity in the magnetic field *i.e.* in free space,

$$B = \mu_0 H$$

or

$$\frac{B}{H} = \mu_0$$

where μ_0 is called permeability of free space or magnetic space constant. Its value is $4\pi \times 10^{-7}$ H/m.

The flux density B also depends upon the nature of the medium. Thus the relative permeability of medium is μ_r, flux density at any point in a magnetic field is given by

$$B = \mu_0 \mu_r H$$

Force on a Conductor in a Magnetic Field

If a conductor carrying a current of I is placed in a uniform magnetic field of flux density B Wb/m^2, it experiences a mechanical force that depends upon the magnitude of current, the length of the conductor and flux density of the magnetic field.

$$F = BIl$$

where, F = Force on the conductor in newton (N)

B = Flux density in $\frac{Wb}{m^2}$ or Tesla (T)

I = Current in the conductor in amperes (A)

L = Effective length of conductor perpendicular to the field in meters (m)

The mechanical force experienced by the conductor is directly proportional to

1. Current flowing in the conductor I.
2. Length of conductor l.
3. Flux density of the uniform magnetic field B.

If the angle between the conductor and the field is θ then the effective length of the conductor perpendicular to the field is $l \sin\theta$ and the force on conductor is given by

$$F = BIl \sin\theta$$

Copyrighted material
Downloaded From : www.EasyEngineering.net

Downloaded From : www.EasyEngineering.net

If $\theta = 0$ *i.e.* the conductor is placed parallel to the field, then there is no force exerted on the conductor.

The principle of force production on a current carrying conductor placed in a magnetic field forms the basis of the operation of the electric motor. That is why it is known as the motor principle.

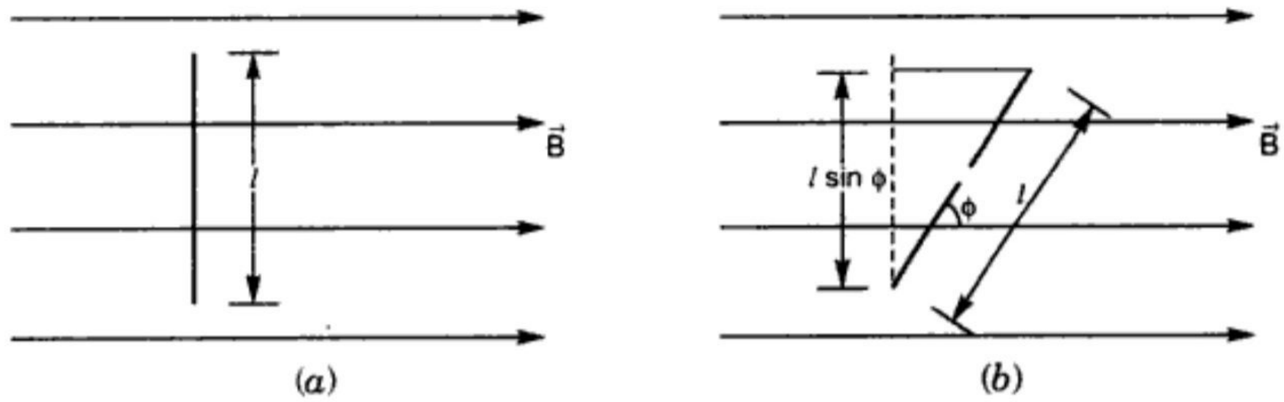

Fig. 12

Fleming's Left Hand (or Motor) Rule

The thumb, the fore finger and the middle finger of the left hand are held mutually at right angle as shown in Fig. 13.

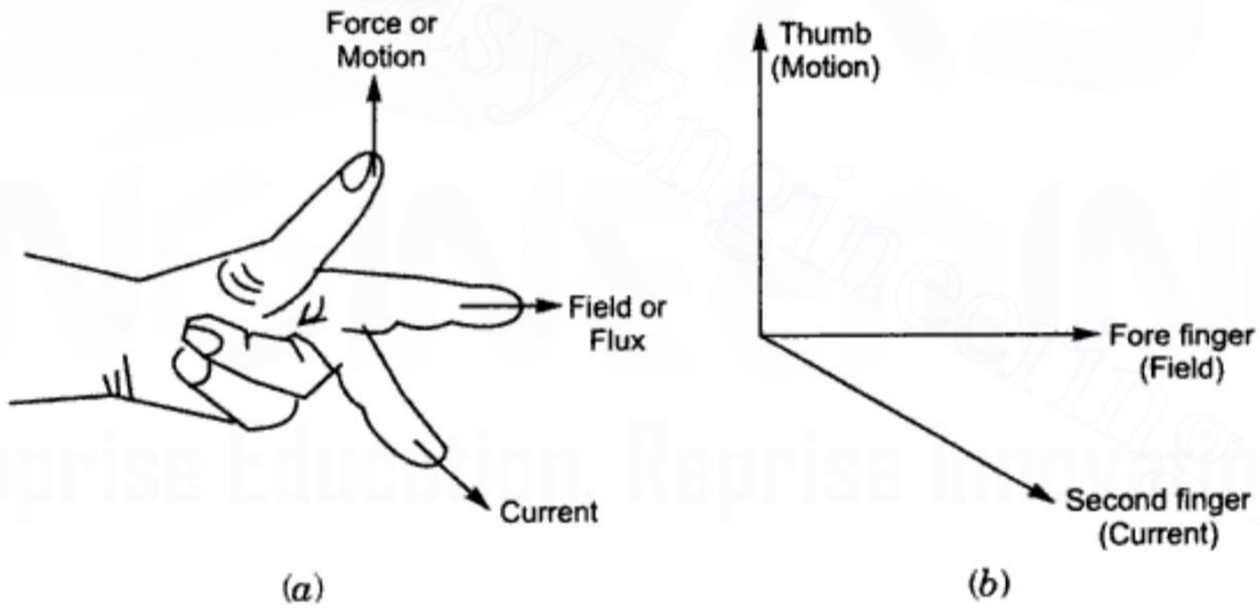

Fig. 13

Electromagnetic Induction

Oersted at Copenhagen in 1820; discovered a very important phenomenon giving the relationship between magnetism and electricity. As per this relationship a conductor carrying a current I is surrounded all along its length by a magnetic field, the lines of magnetic flux being concentric circles in planes at right angles to the conductor. This phenomenon of a magnetic field being associated with a current carrying conductor lead to a question whether the converse of the above is possible, *i.e.* can a magnetic field generate a current? Michael faraday on 29 August 1831, succeed in generating an electric current with the aid of magnetic flux.

From his experiments Faraday single concluded that a current was generated in a coil so long as the lines of force being through the conductor changed. The current thus generated is

Copyrighted material
Downloaded From : www.EasyEngineering.net

Downloaded From : www.EasyEngineering.net

called the induced current and emf that gives rise to this induced current is called the induced e.m.f. This phenomenon of generating an induced current in a closed circuit by changing the magnetic field through it is called electromagnetic induction.

Faraday's Laws of Electromagnetic Induction

There are two principal laws of electromagnetic induction known as Faraday's Laws.

Faraday's First Law **:** It states that whenever the magnetic flux associated or linked with a closed circuit is changed or alternatively when a conductor cuts or is cut by the magnetic flux; an e.m.f. is induced in the circuit resulting in an induced current. This e.m.f. is induced so long as the magnetic flux changes.

Faraday's Second Law **:** It states that the magnitude of the induced e.m.f. generated in a coil is directly proportional to the rate of changes of magnetic flux.

The changes of flux as discussed in the Faraday's Laws can be produced in two different ways:

(*i*) By the motion of the conductor or the coil in a magnetic field *i.e.* the magnetic field is stationary and the moving conductors cut arrows it. The e.m.f. generated in this way is normally called dynastically induced e.m.f.

(*ii*) By changing the current I a circuit thereby changing the flux linked with stationary conductors *i.e.* The conducted or coils remain stationary and flux linking there conductors is changed. The e.m.f. is termed statically induced e.m.f. can be further subdivided into (*l*) self-induced e.m.f.

(*iii*) *Mutually induced emf:* The concept of dynamically induced e.m.f. gives rise to the development of generators where as statically induced e.m.f. was helpful in developing transformers.

Lenz's Law

The direction of statically induced e.m.f. can be obtained with the help of Lenz's law, which states: "The direction of the induced e.m.f. always such that its tends to setup a current opposing the change of flux responsible for producing that e.m.f."

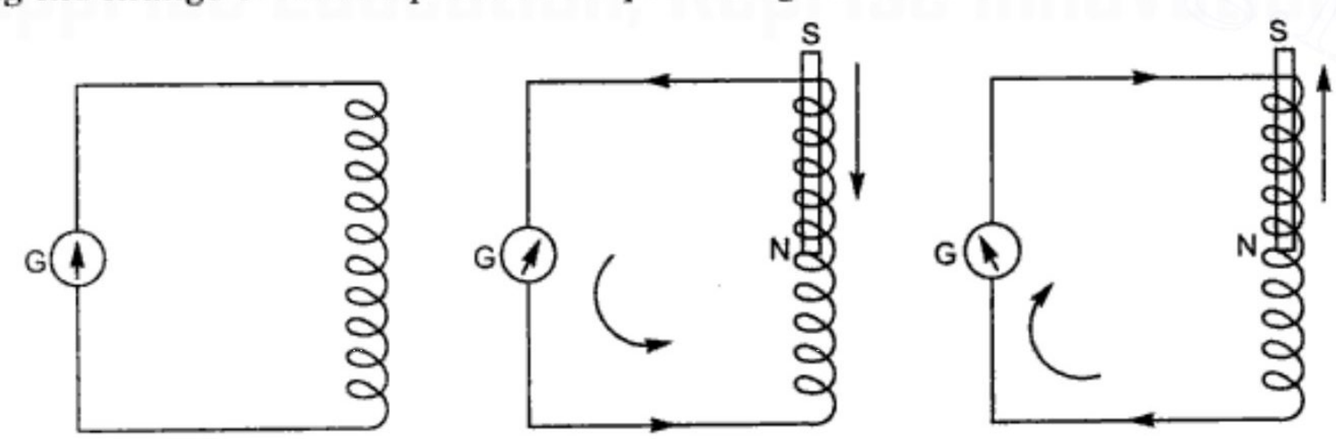

Fig. 14

When the north pole of the magnet is inserted in the coil ,an e.m.f. is induced in it due to the motion of the magnet thereby generating induced current. According to Lenz's Law the direction of the induced current generated in the coil should be such that the motion of the

Copyrighted material
Downloaded From : www.EasyEngineering.net

Downloaded From : www.EasyEngineering.net

magnet is opposed; which is possible only when the upper end of the coil behaves as a north pole. For this is to happen the current generated in the coil should be in the anticlockwise direction as was observed by Faraday.

Fleming's Right Hand Rule

The thumb, fore finger and the middle finger of the right hand are held mutually at right couples as shown Fig. 15. If the forefinger points in the direction of the magnetic flux, the thumb points in the direction of motion of the conductor relative to the magnetic field. Then the middle finger represents the direction of the induced e.m.f.

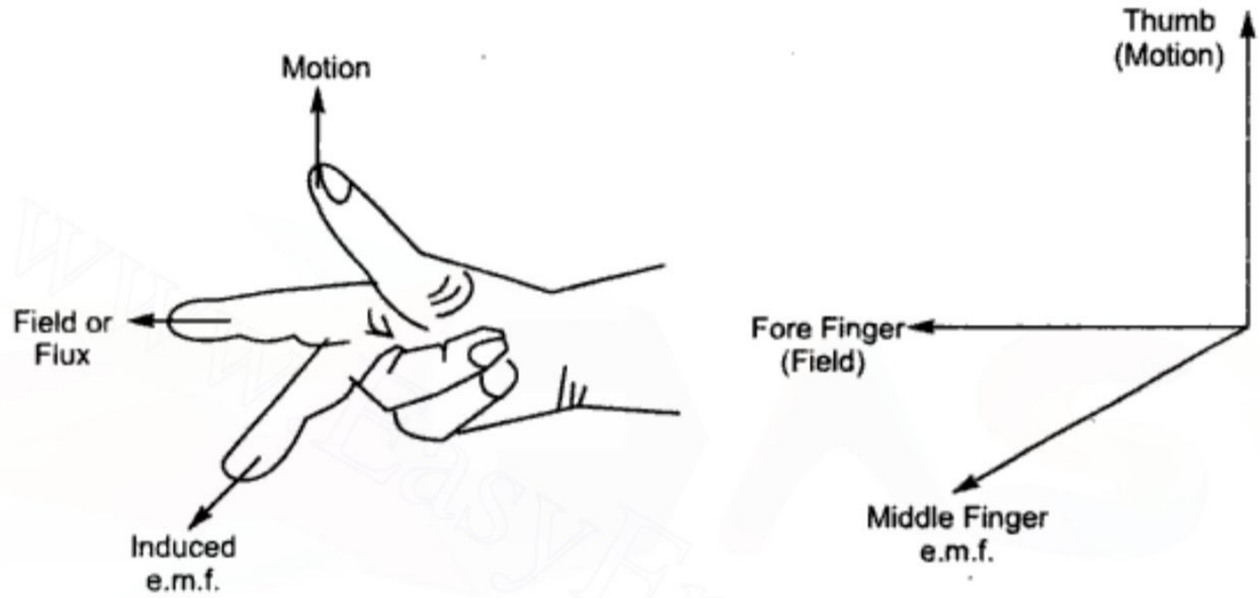

Fig. 15

Magnitude of Induced e.m.f. in a Coil

Let a coil consist of N number of turns. Assume that the flux through the coil changes from its initial value $\varnothing_1$ to $\varnothing_2$ in an interval of t seconds.

Then,

Initial value of flux linkages = $N\varnothing_1$

Value of flux linkages after time t seconds = $N\varnothing_2$

Change of flux linkages in time t seconds = $(N\varnothing_1 - N\varnothing_2)$

As per Faraday's laws of electromagnetic induction the induced e.m.f. in the above coil due to a change of flux is given by

$$\text{Induced e.m.f.} = \frac{N(\varnothing_1 - \varnothing_2)}{t}$$

The instantaneous value of e.m.f. Induced in the coil can be represented as

$$e = -\frac{d}{dt}(N\varnothing)$$

$$e = -N\,d\,\frac{\varnothing}{dt} \text{ volt}$$

The negative sign signifies that the induced e.m.f. Generates a current tending to oppose the increased of flux through the coil.

Material com direitos autorais
Downloaded From : www.EasyEngineering.net

Downloaded From : www.EasyEngineering.net

Dynamically Induced e.m.f.

Dynamically induced e.m.f. is produced by the movement of the conductor in magnetic field. Figure shows a uniform magnetic field of flux density B Tesla, In which the conductor is moving in the direction shown and cuts the flux at right angles.

If l = Length of the conductor *ii* metre.

v = Velocity of melon of conductor in m/s.

dx = distance moved by the conductor in time dt.

Then area swept by moving conductor = $l.dx$

Hence the changes in flux; when the conductor moves a distance dx in time dt is given by

$$d\varnothing = Bldx \text{ (Wb)}$$

The dynamically induced e.m.f. is rate of change of flux linkages *i.e.*

$$\text{Dynamically induced e.m.f.} = \frac{Bldx}{dt}$$

As $$\frac{dx}{dt} = v \text{ (velocity)}$$

Thus dynamically induced e.m.f. = Blv volts.

Suppose that the conductor moves at an angle θ to the direction of field as shown in Fig. The component of velocity which is perpendicular to the direction of field will be responsible for inducing voltage in the conductor. The component of velocity perpendicular to the field in (v sinθ). Therefore the induced voltage when the conductor moves in the direction making an angle θ with the direction of field is

$$e = Blv \sin\theta \text{ volts}$$

The conductor forms part of a closed circuit; there will be a current in free conductor. By Lenz's law the current will be in such a direction as to produce a force that tends to oppose the motion of the conductor.

Statically Induced e.m.f.

When the conductor or coil remains stationary and flux linking with these conductors undergo a change; an e.m.f. is induced in the conductors. Such an induced e.m.f. is termed as statically induced e.m.f. Statically induced e.m.f. can be further classified as (*i*) self induced e.m.f. (*ii*) mutual induced e.m.f.

Self-induced e.m.f.: Any electrical circuit in which the change of current is accompanied by the change of flux and thereby an induced e.m.f. is said to be inductive or to posses self inductance. Thus the property of the coil that enables to induce an e.m.f in it whenever the current changes is called self-induction.

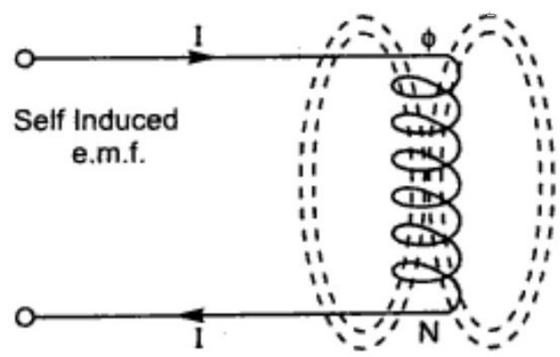

Fig. 16

Material com direitos autorais
Downloaded From : www.EasyEngineering.net

Downloaded From : www.EasyEngineering.net

Consider a coil of N turns carrying a current of I amperes and let $\varnothing$ be the resulting flux linking in the coil. The magnetic flux forms complete loops as shown in Fig. 16 above.

The product N$\varnothing$ is normally termed as flux linkages. Now if the current flowing in coil is changed; then the number of coil linking the coil also changes such e.m.f. is induced in the according to the Faraday's laws of electromagnetic induction. This e.m.f. is termed as statically self induced e.m.f. or the e.m.f. of self-induction.

As per Faraday's laws of electromagnetic induction this induced e.m.f. is given by,

$$e = \frac{-N d\varnothing}{dt} \text{ Volt}$$

Assuming iron core permeability to be constant. Thus the flux is proportional to the current through the coil *i.e.*

$$\Phi \propto I$$

$$\frac{\Phi}{I} = \text{Constant}$$

Now flux can also be written as

$$\text{Flux} = (\text{flux/current}).\ \text{Current}$$

i.e.

$$\varnothing = \left(\frac{\Phi}{I}\right).i$$

Now if current is changed at a certain rate the flux also changes at the same rate

Thus the rate of change of flux $= \left(\frac{\varnothing}{I}\right) \times$ rate of change of current

$$\frac{d\Phi}{dt} = \left(\frac{\varnothing}{I}\right).\frac{di}{dt}$$

Substituting this equation

$$e = -N\left(\frac{\varnothing}{I}\right) \times \text{rate of change of current}$$

$$e = -N\left(\frac{\varnothing}{I}\right).\frac{di}{dt}$$

The term $\left(\frac{N\varnothing}{I}\right)$ *i.e.* flux linkages/amperes is generally called the self-inductance of the coil or co-efficient if self-induction and is denoted by a symbol L.

Therefore, $e = -L\, di/dt$

Where $L = N\frac{\varnothing}{I}$ Henry

The negative sign in equation indicates that it is an e.m.f. Opposing the change i.e. if the current is increasing then this e.m.f. will oppose the increase in current, in case the current is decreasing the induced e.m.f. tends to prevent the decrease of current and its direction is therefore the same as that of current or the applied voltage. It also indicates in that energy is being absorbed from the electric circuit and stored as magnetic energy in the coil.

Material com direitos autorais
Downloaded From : www.EasyEngineering.net

Downloaded From : www.EasyEngineering.net

Mutually Induced e.m.f.: The phenomenon of generation of induced e.m.f. in a circuit by changing the current in a neighboring circuit is called Mutual induction.

Consider two coils Q_1 and Q_2 such that Q_1 is connected to a battery through key K and Q_2 to a galvanometer as shown in Fig. When the key is closed suddenly then current; I start flowing in the coil P, the galvanometer gives a sudden 'Kick' in one direction. Now when K is opened; the galvanometer shows a deflection but in the opposite direction. The above observations indicate clearly that an induced current is setup in the coil Q_2 when the current is changed in the coil Q_1 though the coil Q_2 is not connected physically to coil Q_1. Two coils possessing this property are said to be mutual inductance. The unit of mutual inductance is also Henry. It is denoted by M.

Let $\varnothing_1$ be the flux in coil Q_1 due to current I flowing in it and $\varnothing_2$; the flux induced in Q_2 due to flux $\varnothing_1$ in coil Q_1.

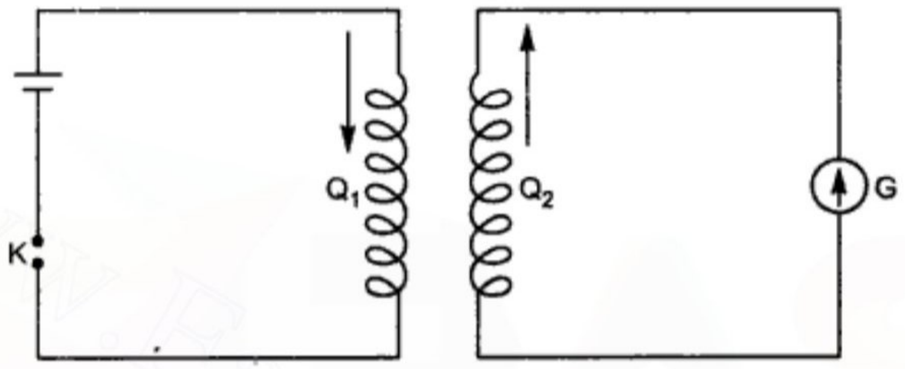

Fig. 17

The ratio $\frac{\varnothing_2}{\varnothing_1}$ is denoted by K.

Thus, $$\frac{\varnothing_2}{\varnothing_1} = K$$

or $$\varnothing_2 = K\varnothing_1$$

Also $$\varnothing_1 \propto I$$

or $$\frac{\varnothing_1}{I} = \text{constant}$$

Now, $$\varnothing_2 = \left(\frac{\varnothing_2}{I}\right).\, I$$

$$\varnothing_2 = \left(\frac{K\varnothing_1}{I}\right).\, \text{Current}$$

When current is changed at a certain rate $\varnothing_2$ also changes at the same rate. Thus rate of change

$$\varnothing_2 = K\frac{\varnothing_1}{I} \times \text{rate of change of current}$$

$$= d\frac{\varnothing_2}{dt} = \left(\frac{K\varnothing_1}{I}\right)\frac{di}{dt}$$

Material com direitos autorais
Downloaded From : www.EasyEngineering.net

Downloaded From : www.EasyEngineering.net

According Faraday's law of electromagnetic induction the e.m.f. induced in Q_2 is given by

$$e_s = N_2.(\text{rate of change of flux } \varnothing_2)$$

where N_2 is the number of flux in coil Q_2

$$e_s = N_2.\left(\frac{K\varnothing_1}{I}\right).\frac{di}{dt}$$

$$e_s = M.\frac{di}{dt}$$

where $M = \dfrac{N_2 K \varnothing_1}{I} = \dfrac{N_2 \varnothing_2}{I}$

= Flux linkages of coil Q_2/current in coil Q_1.

The constant M; which is equal to the flux linkages of coil Q_2 per ampere of current in coil Q_1; is called the coefficient of mutual induction or mutual inductance.

Hence the coefficient of mutual induction is defined as the number of lines of force passing through the secondary coil Q_2 when unit current changes in the primary coil Q_1. It is also numerically equal to the induced e.m.f. in one coil due to unit rate of change of current in the other coil.

Coefficient of Coupling

Consider two coils Q_1 and Q_2 having N_1 and N_2 turns respectively and coupled magnetically. Mutual inductance between the coils Q_1 and Q_2 is given by

$$M = \frac{N_1 \varnothing_1}{I_2}$$

or

$$M = \frac{N_1 K_1 \varnothing_2}{I_2}$$

where $\varnothing_2$ is the flux produced by current I_2 flowing in the coil Q_2. Mutual inductance between the coils Q_1 and Q_2 can also be written as,

$$M = \frac{N_2 \varnothing_2}{I_1}$$

or

$$M = \frac{N_2 K_2 \varnothing_1}{I_1}$$

where $\varnothing_1$ is the flux produced by current I_1 flowing in coil Q_1; however only a fraction $K_2 \varnothing_1$ links the coil Q_2.

Multiplying above eqs.

$$M_2 = \frac{(N_1 N_2 K_1 K_2 \varnothing_1 \varnothing_2)}{I_1 I_2}$$

$$= K_1 K_2 \left(\frac{N_1 \varnothing_1}{I_1}\right)\left(\frac{N_2 \varnothing_2}{I_2}\right)$$

$$M_2 = K_1 K_2 (L_1)(L_2)$$

Material com direitos autorais
Downloaded From : www.EasyEngineering.net

Downloaded From : www.EasyEngineering.net

where L_1 and L_2 are self-inductance of coil Q_1 and Q_2 respectively.

$$M = \left(\sqrt{K_1 K_2}\right)\left(\sqrt{L_1 L_2}\right)$$

If, $K_1 = K_2 = K$

Then $M = K\left(\sqrt{L_1 L_2}\right)$

or $$K = \frac{M}{\left(\sqrt{L_1 L_2}\right)}$$

The constant K is called; the coefficient of coupling. Hence coefficient of coupling depends upon the mutual inductance between the two coils and also upon the self-inductance of these coils.

Inductances of Inductively Coupled Coils Connected in Series

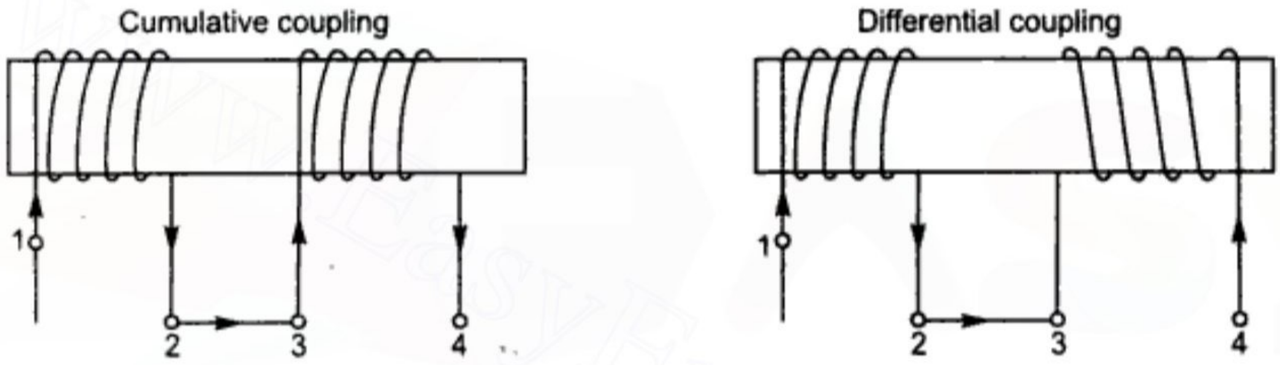

Fig. 18

Two inductive coils Q_1 and Q_2 connected in series so that the currents through the two coils are in the same direction' in order to produce flux in the same direction. Coils connected in this manner are said to be cumulative coupled. Let L_1 and L_2 be self-inductances of coils Q_1 and Q_2 respectively and M the mutual inductance between them.

If the current in the coils increases by di amperes in dt second, then

e.m.f. Induced in coil Q_1 due to its self inductance $= -L_1\dfrac{di}{dt}$

e.m.f. Induced in coil Q_2 due to it self inductance $= -L_2\dfrac{di}{dt}$

e.m.f. Induced in coil Q_1 due to increase of current in coil $Q_2 = -M.\dfrac{di}{dt}$

e.m.f. Induced in coil Q_2 due to increase of current in coil $Q_1 = -M\dfrac{di}{dt}$

Hence that induced e.m.f. in coils Q_1 and Q_2

$$= -\left(\frac{L_1 di}{dt} + \frac{L_2 di}{dt} + \frac{2M di}{dt}\right)$$

Copyrighted material
Downloaded From : www.EasyEngineering.net

Downloaded From : www.EasyEngineering.net

or $$= -(L_1+L_2+2M)\frac{di}{dt} \text{ Volts}$$

Equivalent single coil having inductance L_A

So, $$L_A = L_1+L_2+2M$$

Now if the coil are differentially coupled the induced e.m.f. in coil A due to an increase of current di amperes in dt second in coil B (*i.e.* $M\frac{di}{dt}$) is in the same direction as the current .

Similarly e.m.f. Induced in the coil B due to a change of current in coil A is also in the same direction as the current.

Hence total e.m.f. induced in coils Q_1 and Q_2

$$= -L1\frac{di}{dt} - L_2\frac{di}{dt} + 2M\frac{di}{dt}$$

or $$= -(L_1 + L_2 - 2M)\frac{di}{dt} \text{ Volts}$$

Equivalent single coil inductance is L_B

So, $$L_B = L_1+L_2-2M$$

Hence total equivalent inductance of inductively coupled circuits is $L_1 + L_2 \pm 2M$. When the coils are cumulatively, coupled positive sign is to the taken and when these are differently coupled negative sign is considered.

SOLVED NUMERICAL PROBLEMS

Example 1: *Calculate the magnetising force along the axis of a solenoid wound with 800 turns of wire when a current of 5A is flowing through it. The length of solenoid is 2.5 metre.*

Solution : Number of turns, N = 800

Current i = 5 amp

Length l = 2.5 m

$$H = \frac{Ni}{e} = \frac{800 \times 5}{2.5} = 1600 \text{ AT/m.}$$

Example 2: *Calculate the magnetic field strength and flux density if flux $\phi = 10^{-3}$ weber and area of cross section $a = 4 \times 10^{-4}$ m^2. The permeability of the medium may be taken isair.*

Solution :

$\phi = 10^{-3}$ weber

$a = 4 \times 10^{-4}$ m^2

$\mu = \mu_0 = 4\pi \times 10^{-7}$ H/m line $\mu_r = 1$

Flux density $$B = \frac{\phi}{a} = \frac{10^{-3}}{4 \times 10^{-4}} = \frac{10}{4} = 2.5 \text{ WB/m}^2$$

Field strength $$H = \frac{B}{\mu_0} = \frac{2.5}{4\pi \times 10^{-7}} = 1.98 \times 10^{-8} \text{ AT/m.}$$

Copyrighted material
Downloaded From : www.EasyEngineering.net

Downloaded From : www.EasyEngineering.net

Example 3: *The field ocils of a two pole generator has 500 turns each and are connected in series. The magnetic flux per pole is 0.020 when field coils are excited. If the field circuit is opened in 0.07, 0.02 and second and residual magnetism is 0.0020 WB/pole, determine the average voltage which is induced across field coils.*

Solution : Number of turns, N = 2 × 500 = 1000

Total initial flux = 0.020 × 2 = 0.04 WB

Tottal residual flux = 0.0020 × 2 = 0.0040 WB

∴ Change in flux (df) = (0.04 × 0.0040) WB

= 0.036 WB

Change in time dt = 0.02 sseconds

$$\therefore \quad e = N\frac{d\phi}{dt}$$

$$= 1000 \times \frac{0.036}{0.020} = 1800 \text{ Volt.}$$

Example 4: *A conductor 2.0 m long carried a current of 55 amp at right angles to a magnetic field of density 1.4 Tesla. Calculatte the force on the conductor.*

Solution : $l = 2.0$ m, I = 55 amp, B = 1.4 TT

Force F = B*il*

= 1.4 × 55 × 2.0 = 154 N

Example 5: *In a loudspeaker, the moving coil consists of 150 turns of fine wire wound on a circular former so that the coil has an effective diameter of 25 mm. The coil is situated in a radial field of the speaker magnet so that the whole of its length is perpendicular to a field which has a flux density of 1.2 T. Calculate the force on the coil when it is carrying a current of 100 mA.*

Soluttion : *The coil may be considered as one conductor of length = Number of turns × Circumference of the former*

$$l = 150 \times \pi \times 25 \times 10^{-3} = 11.78 \text{ m}$$

$$i = 100 \text{ mA} = 100 \times 10^{-3} \text{ A}$$

$$B = 1.2 \text{ T}$$

$$F = Bil$$

$$= 1.2 \times 100 \times 10^{-3} \times 11.78 = 1.41 \text{ N.}$$

Example 6: *A conductor of length 0.6 m moves in a uniform magnetic field of density 1.2 T at a velocity of 25 m/s. Calculate the induced voltage in the conductor when the direction of motion is (a) perpendicular to the field (b) inclined at 45° to the direction of the field.*

Solution : $l = 0.6$ m, B = 1.2 T, $u = 25$ m/s.

(*a*) induced volttage in inductor when perpendicular to field

$$e = Blu$$

$$= 1.2 \times 0.6 \times 25 = 18 \text{ V}$$

(*b*) Induced volttage when conductor is at 45° to the direction of the field.

$$e = Blu \sin\theta$$

$$= 1.2 \times 0.6 \times 25 \times \sin 45° = 12.73 \text{ Volt.}$$

Copyrighted material
Downloaded From : www.EasyEngineering.net

Downloaded From : www.EasyEngineering.net

Example 7: *A conductor 0.25 m long carries a current of 100 A and lies at right angle to a magnetic field of density of 0.45 T, calculate the force acting on the conductor. If the force causes the conductor to move at a velocity of m / s. Calculate the voltage generated in it and the power developed by it.*

Solution : $l = 0.25$ m, $i = 100$ A, B = 0.45 T

Force $F = B \,.\, i \,.\, l$

$= 0.45 \times 100 \times 0.25$

$= 11.25$ N

Induced voltage $e = B \,.\, l \,.\, u$

$= 0.45 \times 0.25 \times 10$

$= 1.13$ Volt

Power developed = Force × Velocity

$= 11.25 \times 10 = 112.5$ W.

Example 8: *A coil of 300 turns has a flux of 0.45 mWb linking with it whencarrying a current of 2A. Determine the inductance of the coil.*

$N = 300, \phi = 0.45 \text{ mWb} = 0.45 \times 10^{-3}$ Wb

$i = 2.0$ Amp

$$L = \frac{N\phi}{i} = 300 \times \frac{0.45 \times 100^{-3}}{2} = 0.0675 \text{ H}$$

$= 67.50$ mH.

Example 9: *A coil consists of 600 turns carrying current of 8 amp in gives rise to a magnetic flux of 1.1 mWb. Calculate the inductance of the coil. If the current in coil is reversed in 0.01 second, determine the average voltage inducd in the coil.*

Solution : $N = 600, i = 8$ amp, $\phi = 1.1$ mWB

$\phi = 1.1 \times 10^{-3}$ Wb

$$L = \frac{N\phi}{i}$$

$$= 600 \times \frac{1.1 \times 10^{-3}}{8} = 0.0825 \text{ H}$$

Initial Current = 10 A

Final currnt (in Reverse direction) = – 10 A

Change in current = Final Current – Initial Current

$di = -10 - 10 = -20$ amp

Change in time $dt = 0.01$ s

Induced Voltage $e = -L \dfrac{di}{dt}$

$$= -0.0825 \times \frac{(-20)}{0.01} = 165 \text{ Volt.}$$

Copyrighted material
Downloaded From : www.EasyEngineering.net

Downloaded From : www.EasyEngineering.net

Example 10: *The number of turns in two coupled coils are 600 and 1500 respectively. When a current of 5A flows in coil 2, the toal flux in this coil is 0.75 mWb and the flux linking the first coil is 0.45 mWb. Calculate L_1, L_2, M and K.*

Solution :

$$N_1 = 600,\ N_2 = 1500,\ \phi_2 = 0.75 \text{ mb} = 0.75 \times 10^{-3} \text{ Wb}$$

$$\phi_{21} = 0.45 \text{ mWb} = 0.45 \times 10^{-3} \text{ Wb}$$

$$i_2 = 5 \text{ Amp}$$

So,

$$L_2 = \frac{N_2\phi_2}{i_2} = \frac{1500 \times 0.75 \times 10^{-3}}{5} = 0.025 \text{ H}$$

$$K = \frac{\phi_{21}}{\phi_2} = \frac{0.45}{0.75} = 0.60$$

We know that

Selt inductance $\propto N^2$

$$L_1 \propto N_1^2 \text{ and } L_2\ N_2^2$$

$$\frac{L_1}{L_2} = \frac{N_1^2}{N_2^2}$$

$$L_1 = \frac{N_1^2}{N_2^2} L_2$$

$$L_1 = \left(\frac{600}{1500}\right)^2 \times 0.025 = 0.036 \text{ H}$$

Mutual inductance

$$M = K\sqrt{L_1L_2}$$

$$= 0.06\sqrt{0.036 \times 0.225} = 0.054 \text{ H.}$$

Example 11: *The coefficient of coupling between two coils is 0.70. There are 200 turns in coil 1. The total flux of coil 1 is 0.4 mWb, when the current in this coil is 3.5 A. When 4 is changed from 3.5 A to zero in 3 m sec., the voltage induced in coil is 70 V. Calculate L_1, L_2, M and N_2.*

Solution :

$$K = 0.70,\ N_1 = 200,\ \phi_1 = 0.4 \text{ mWb} = 0.4 \times 10^{-3} \text{ Wb}$$

$$i_1 = 3.5 \text{ A}$$

$$L_1 = N_1 \frac{\phi_i}{i_1} = 200 \times \frac{0.4 \times 10^{-3}}{3.5} = 22.85 \text{ mH}$$

$$V_2 = M\frac{di}{dt}$$

$$70 = M\frac{3.5}{3 \times 10^{-3}}$$

$$M = \frac{70 \times 3 \times 10^{-3}}{3.5} = 0.06 \text{ H}$$

$$M = K\sqrt{L_1L_2}$$

$$0.06 = 0.70\sqrt{22.85 \times 10^{-3} \times L_2}$$

Материал, защищенный авторским правом
Downloaded From : www.EasyEngineering.net

Downloaded From : www.EasyEngineering.net

4

Magnetic Circuits

Introduction

Magnetic flux lines always form closed loops. The complete closed path followed by the flux lines is called a magnetic circuit. Thus, a magnetic circuit provides a path for magnetic flux, just as an electric circuit provides a path for flow of electric current. There are lots of similarities between the magnetic and electric circuits. The study of magnetic circuit concepts is essential in the design, analysis and application of electromagnetic devices like transformers, rotating machines electromagnetic relays etc.

Magneto-Motive Force (M.M.F.)

Flux is produced round any current carrying coil. Magneto-motive force can be produced when current flows in a coil of single or more turns *i.e.* product of the current and number of turns; is defined as the magneto-motive force (mmf).

$$\text{mmf } F = NI \text{ Amp–Turn}$$

where N = number of turns in the coil

I = current through the coil (Amp.)

Since N is dimensionless then mmf is taken as amp.

Magnetic Field Strength or Intensity

If the magnetic circuit of a magnetic material is homogeneous and of uniform cross section area, the magneto-motive force per metre length of the magnetic circuit is called the magnetic field strength. It is represented by H. Hence the magnetic field strength is

$$H = \frac{\text{mmf}}{1} = \frac{NI}{1} \frac{A}{m}$$

where l is effective length of the magnetic flux path in metre.

$$H = \frac{F}{l}$$

or

$$F = H.l$$

Материал, защищенный авторским правом
Downloaded From : www.EasyEngineering.net

Downloaded From : www.EasyEngineering.net

Reluctance (S)

The opposition offered by a magnetic circuit to the establishment of magnetic flux is called the reluctance of the magnetic circuit. Let the iron ring have a mean circumference of l meter, cross sectional area of a m^2 and N turns carrying current of I ampere than the total flux flowing in the dotted path is given by,

$$\text{Flux} = \text{Flux density} \times \text{Cross section area}$$

$$\varnothing = B.a$$

Also

$$\text{mmf} = \text{magnetic field strength} \times \text{Length of the magnetic flux path}$$

$$\text{mmf (F)} = H.l$$

Dividing above equations

$$\frac{\varnothing}{F} = \frac{B.a}{H.l}$$

We know that,

$$\frac{B}{H} = \mu_0\mu_r$$

$$\frac{\varnothing}{F} = \frac{\mu_0\mu_r.a}{l}$$

or

$$\frac{F}{\varnothing} = \frac{l}{\mu_0\mu_r.a}$$

or

$$\frac{\text{mmf}}{\text{flux}} = \frac{l}{\mu_0\mu_r.a} = S$$

Similar in electric circuit

$$\frac{\text{emf}}{\text{current}} = R = \frac{\rho.l}{a}$$

Thus the reluctance is the property of magnetic material, which opposes the flow of magnetic flux through it.

Reluctance "S" $= \dfrac{l}{\mu_0\mu_r.a}$ for magnetic material

Reluctance "S" $= \dfrac{l}{\mu_0 a}$ for non-magnetic material

Hence the reluctance offered by the magnetic circuit or a part of magnetic circuit depends upon

1. Nature of magnetic material *i.e.* $\mu_0\mu_r$.
2. Length of magnetic flux path in the part of magnetic circuit *i.e.* l.
3. Cross section area of the material through which flux is passing *i.e.* "a".

The reluctance is expressed in ampere/Webber and is denoted by "S". The reciprocal of reluctance is termed as permeance, which is analogous to conductance in electric circuits.

Laws of Magnetic Circuits

All the laws applicable to electric circuit such as Ohm's law, Kirchhoff's laws etc. can also be applied to magnetic circuits simply by replacing the electrical terms with analogous magnetic terms.

Материал, защищенный авторским правом
Downloaded From : www.EasyEngineering.net

Downloaded From : www.EasyEngineering.net

Ohm's law for electrical circuits is

$$\text{e.m.f.} = \text{current} \times \text{Resistance}$$

or

$$E = I.R$$

Current

$$I = \frac{E}{R}$$

Ohm's law for magnetic circuit will be

$$\text{mmf} = \text{flux. Reluctance}$$

$$F = \varnothing.S$$

Flux

$$\varnothing = \frac{F}{S}$$

So we can compare these two relations, it is found that the flux is analogous to current, mmf is analogous to e.m.f. and reluctance is analogous to resistance but reluctance is not a energy-loss component.

Also

$$\text{Resistance} = \frac{(\text{resistively} \times \text{length})}{\text{area}} = \frac{\rho.l}{a}$$

$$= \left(\frac{1}{\text{conductivity}}\right).\left(\frac{\text{length}}{\text{area}}\right)$$

Similarly for magnetic circuit

$$\text{Reluctance} = \left(\frac{1}{\text{premeability}}\right).\left(\frac{\text{length}}{\text{area}}\right)$$

$$= \left(\frac{1}{\mu_0\mu_r}\right).\frac{l}{a}$$

In series electric circuit, the total resistance of the circuit is equal to the sum of all the resistances in series. Similarly when the flux has to permeate a number of portions of a magnetic circuit in series, the total reluctances of the complete magnetic circuit will be equal to the sum of the reluctances of the various portions i.e.

$$S = S_1 + S_2 + S_3 + \ldots\ldots + S_n$$

In parallel magnetic circuits the same mmf is applied to each of the parallel paths and the total flux divides between the paths is inverse proportion to their reluctances

$$\varnothing = \varnothing_1 + \varnothing_2 + \varnothing_3 + \ldots + \varnothing_n$$

$$\frac{1}{S} = \frac{1}{S_1} + \frac{1}{S_2} + \frac{1}{S_3} + \ldots + \frac{1}{S_n}$$

In a series electric circuit the total voltage drop is equal to the sum of the voltage drop in various elements of the circuits. Similarly, the total mmf required to establish a given flux in the magnetic circuit is equal to the sum of the mmf necessary to establish the flux through the various parts of the circuit. Thus the total mmf for the complete magnetic circuit consisting of a number of homogeneous is given by

Bahan dengan hak cipta
Downloaded From : www.EasyEngineering.net

Downloaded From : www.EasyEngineering.net

Total $$\text{mmf} = F_1 + F_2 + F_3 + \ldots\ldots + F_n$$

$$F = H_1 l_1 + H_2 l_2 + H_3 l_3 + \ldots\ldots + H_n l_n$$

Total $$\text{mmf } F = \frac{B_1 l_1}{\mu_1} + \frac{B_2 l_2}{\mu_2} + \frac{B_3 l_3}{\mu_3} + \ldots + \frac{B_n l_n}{\mu_n}$$

where l_1, l_2, l_3 ... etc. are the magnetic flux path length in the various parts of the magnetic circuits and μ_1 μ_2 μ_3 etc. are the absolute permeability's of the medium of various of magnetic circuit.

Ampere Turns for a Magnetic Circuit

The mmf acting around a complete magnetic circuit is equal to the total ampere turns required to force the given flux through the magnetic circuit i.e.

Total ampere turns $$= \frac{B_1}{\mu_1 . l_1} + \frac{B_2}{\mu_2 . l_2} + \frac{B_3}{\mu_3 . l_3} + \ldots + \frac{B_n}{\mu_n . l_n}$$

Above equation clearly indicates that the mmf per unit length or the ampere turns per unit length of each part of a magnetic circuit depends upon the working flux density and the absolute permeability of the material of that part. The absolute permeability depends on the nature of magnetic material and also upon the working value of flux density. Hence ampere turns per unit length of the magnetic flux path for a particular part of the magnetic material can be found out standard curves of the material, plotted as flux density vs ampere turns per unit length.

Calculations of Ampere Turns

Ampere turns for varies path of the magnetic circuit will be calculated separately. To calculate the ampere-turns of a particular part, the following procedures to followed in general:

1. Cross sectional area is the part of calculated from the given dimensions
2. The reluctance of the calculated using equation reluctance, $S = \frac{l}{\mu_0 \mu_r a}$
3. The magnetic flux established in that part is calculated using $\varnothing$= mmf/n
4. Magnetic flux density is found by using $B = \frac{\varnothing}{a}$
5. Ampere turns per meter of the magnetic flux path length in that part at the flux density calculated above is found by using the magnetization curve of the magnetic material of that part.
6. Length of the magnetic flux path in that part is estimated from the given dimensions.
7. Total ampere-turns for the part are obtained by multiplying ampere-turns per meter by the length of flux path.
8. General procedure is now applied to a various path of magnetic circuit.
9. Total ampere-turns for the complete magnetic circuit can now be formed by adding algebraically the ampere turns needed by the various parts of the magnetic circuit.

Bahan dengan hak cipta
Downloaded From : www.EasyEngineering.net

Downloaded From : www.EasyEngineering.net

Leakage Flux

The part of total magnetic flux that has its path wholly within the magnetic circuit is called the useful magnetic flux. The magnetic paths having path partly in the magnetic circuit and partly in air is called the leakage magnetic flux. Thus, the total magnetic flux produced is equal to the sum of the useful magnetic flux and the leakage flux. The ratio of the total flux produced to the useful flux is called the leakage factor or leakage coefficient. It is it is denoted by λ.

$$\text{Leakage factor } '\lambda' = \frac{\text{total flux produced}}{\text{useful flux}}$$

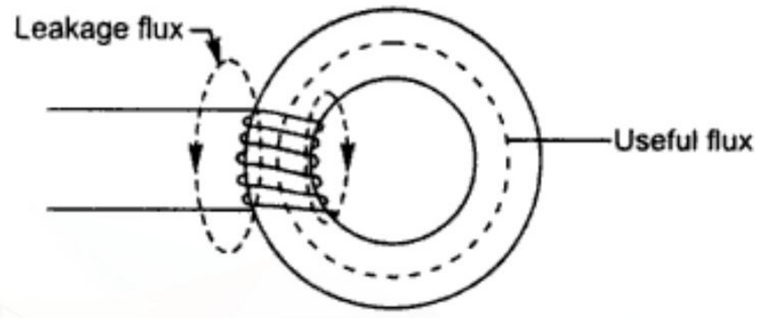

Fig. 1 : *Useful and leakage flux.*

The value of λ is always greater than unity. Typical values of leakage factor are from about 1.12 to 1.25. Leakage is a characteristic of all magnetic circuits and can never be completely eliminated.

FRINGING

Air gaps are provided in many practical magnetic circuits. Consider a ring as shown in Figure:- provided with an air gap. When the flux line crosses the air gaps they tend to bulge out across the edges of the air gap. This effect is called fringing as shown in Figure:-. The effect of fringing to make the effective gap area larger than that of the ring, Consequently the flux density in the air gap is reduced. The effective increase depends upon the length of air gap. The air gap length is kept as small as possible so that the reduction in the flux density is the minimum. If the air gap length is small compared with the gap width, the effect of fringing can be neglected. In calculations, the effect of fringing is allowed by introducing an empirical factor.

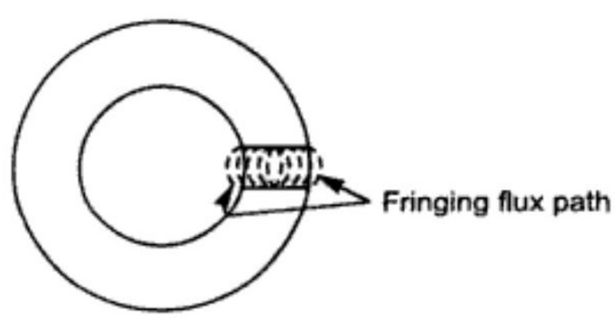

Fig. 2 : *Fringing.*

Calculation of Ampere Turns for the Air Gap

Total ampere turns for the air gap is given by

Bahan dengan hak cipta
Downloaded From : www.EasyEngineering.net

Downloaded From : www.EasyEngineering.net

$$\text{Mmf} = AT_g = \text{flux}^* \text{ Reluctance}$$

Reluctance for air gap (for which $\mu_r = 1$) $= \dfrac{l_g}{\mu_0} A_g$

Thus, $$ATg = \varnothing.S = \frac{\varnothing.l_g}{\mu 0 A_g} \qquad \left(B = \frac{\varnothing}{A}\right)$$

$$= \left(\frac{\varnothing}{A_g}\right).\left(\frac{l_g}{\mu_0}\right) = \frac{B_g.l_g}{\mu_0}$$

where, $\mu_0 = 4\pi.10^{-7} \dfrac{H}{m} = \dfrac{l_g.B_g}{4\pi.10^{-7}}$

or ampere terns for the air group $AT_g = 0.796\ B_g.l_g.10^6$

where, B_g = gap flux density in $\dfrac{wb}{m^2}$.

l_g = length of magnetic flux path in air gap in metre.

Comparison of the Electric and Magnetic Circuit

SIMILARITIES

Electric Circuit	*Magnetic Circuit*
1. Current flows in the circuit.	Flux is assumed to flow.
2. The path of current is called electric circuit.	Path of flux is called magnetic circuit.
3. Current flows due to e.m.f.	Flux flows due to mmf.
4. Flow of current is restricted resistance of the circuit.	Flows of flux is restricted by reluctance of the circuit.
5. Current = e.m.f./resistance	Flux = e.m.f./reluctance
6. Resistance (R) = $\dfrac{l}{\sigma A}$	Reluctance (S) = $\dfrac{l}{\mu A}$

DISSIMILARITIES

Electric Circuit	*Magnetic Circuit*
1. Current actually flows in the circuit.	Flux does not flow, it is only assumed to flow for finding out. certain effects
2. Energy is needed till the current flows.	Energy is needed only to create the magnetic flux
3. Resistance of the circuit is independent current.	Reluctance of the circuit changes With the magnetic flux.

Material com direitos autorais
Downloaded From : www.EasyEngineering.net

Downloaded From : www.EasyEngineering.net

Calculation of Ampere Turns of Series-Parallel Magnetic Circuit

In as shown in Fig. 3, the magnetic frame, in which magnetic circuit exists in parallel symmetrical pairs. The common section generally known as central limbs is wound with a number of turns, establishing the total flux ∅ wb. The frame consist of two outer limbs which are mainly to provide a path to the magnetic flux .The total flux ∅ then divides into two parts and follows the different paths which recombine at the other end of the common section.

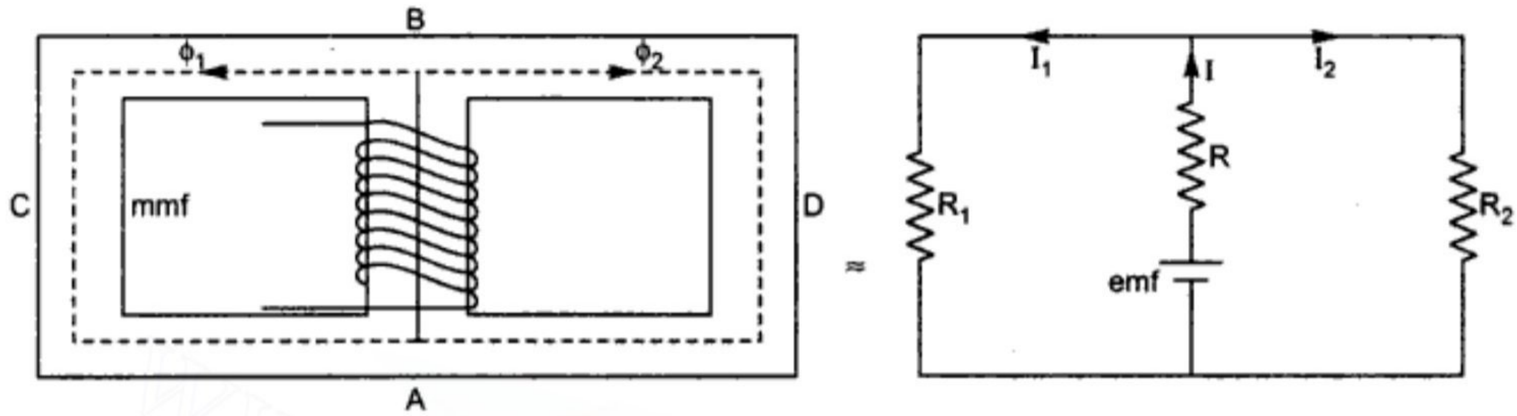

Fig. 3 : *Series-parallel magnetic circuit.*

Let the flux in other limb c be $\varnothing_1$ and that in limb D be $\varnothing_2$

Then $\varnothing = \varnothing_1 + \varnothing_2$

Electrical equivalent is

$$I = I_1 + I_2$$

where S = reluctance of the path AB

S_1 = reluctance of the path BCA and

S_2 = reluctance of the path BDA

Then, $\text{mmf} = \varnothing.S + \varnothing_1 S_1$

and $\text{mmf} = \varnothing.S + \varnothing_2 S_2$

Electrical equivalent equations can be given as

$$\text{emf} = IR + I_1R_1$$

$$\text{emf} = IR + I_2R_2$$

Hence, total ampere turns required = ampere turns required for the common section + ampere turns required for one parallel path.

These type of magnetic frames are needed for shall type of transformers and for most of the rotating electrical machines.

Magnetic Curve or B-H Curve

The graph between the flux density B and field intensity H of a magnetic material is called the magnetization curve or B-H curve. In air or a non-magnetic material The flux density B is proportional to magnetic field intensity H. Therefore the graph of B versus is a straight line through the origin as shown in fig. In the characteristic diagram except for a small portion near the origin the curve is linear from A to K. Over this portion the flux density B is proportional to the field intensity H and μr is constant. For higher values of H There is no further

Material com direitos autorais
Downloaded From : www.EasyEngineering.net

Downloaded From : www.EasyEngineering.net

increase in B with H. The curve becomes almost horizontal after the point K. The material is then said to be saturated and the point K is called the point of saturation for the material.

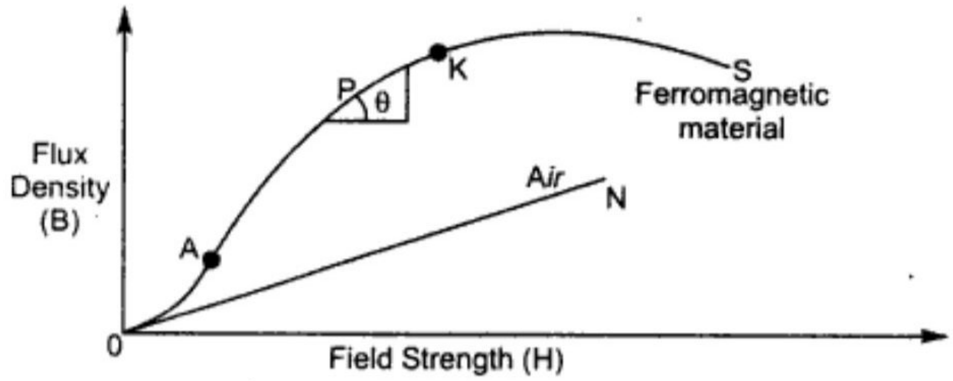

Fig. 4 : *B-H curves for air and a ferromagnetic material.*

The slope of the B-H curve at any point P is given by

$$\tan\theta = \frac{B}{H}$$

$$B = \mu_0 \mu_r . H$$

$$\mu_r = \left(\frac{1}{\mu_0}\right).\left(\frac{B}{H}\right) = \frac{\tan\theta}{\mu_0}$$

Thus, μ_r is proportional to slope of the B-H curve at any point starting from a definite value at the origin .The slope increases as B increases until its becomes maximum. It then gradually decreases as B increases further. The slope becomes almost zero in the satmation region when the curve becomes horizontal. The B-H curves shows that permeability μr of a magnetic material changes with the flux density B.

Explanation of the Shape of B-H Curve

The shape of B-H curve can be explained on the basis of domain theory. Initially the specimen is magnetically neutral because the domains are randomly oriented so that their magnetic effects cancel each another. If an external magnetic field is applied, the domains having their magnetic axis close to the direction of the applied field which grow in size at expense of their neighboring domains. This growth is reversible and if the applied field is removed, the flux also becomes zero. The portion OA on the B-H curve is due to this initial alignment. As H is increase further, more domains align themselves with the field then grow in size. This growth is irreversible and if the applied field removed the flux will still be there due to the aligned domains .The building of domains at a steady state is represented by the linear portion AK of the B-H curve. At higher values of H, rotation of the remaining domains taken place. When most are the domains are aligned, the material is said to be magnetically saturated. It is shown by the portion KS of the B-H curve. The point K where the saturation begins is called the knee of the curve.

Hysteresis

Hysteresis is the name given to the lagging of flux density B behind the magnetizing force H,when a specimen of Ferromagnetic material is taken through a cycle of magnetization. If the specimen has been completely demagnetized and the magnetizing force H is increased in

Material com direitos autorais
Downloaded From : www.EasyEngineering.net

Downloaded From : www.EasyEngineering.net

steps from zero. The relationship between flux density B and H is represented by curve OC; which is normal magnetization curve. If the value of H is now decreased the trace of B is higher than OC and follows the curve CD until H in reduced to zero. Thus when H reaches zero there is a residual flux density referred to as remnant flux density denoted by B_r. In order to reduce B to be zero, negative field strength OE must be applied. The magnetic field intensity OE required to wipe out the residual magnetism Br is called coercive force. As H is further increased in negative direction, the specimen becomes magnetized with the opposite polarity as shown by Curve EF. If H varied backwards from LO to OK, the flux density curve follows a path FGC that is similar to the curve CDEF. The closed loop CDEFGC thus traced out is called the Hysteresis loop of the specimen. The term remnant flux density Br is called retentively and the term coercive force is often called coactivity.

The shape of the Hysteresis loop will depend upon the nature of magnetic material. Steel alloyed with 4% silicon has a very narrow Hysteresis loop. Hysteresis in magnetic material results in dissipation of energy, which is proportional to the area of the Hysteresis loop. Hence the following conclusion can be drawn.

1. Flux density B always lags with respect to the magnetizing force H.
2. An expenditure of energy is essential to carry the specimen through a complete cycle of magnetization.
3. Energy loss is proportional to the area by Hysteresis loop and depends upon the quality of the magnetic material.

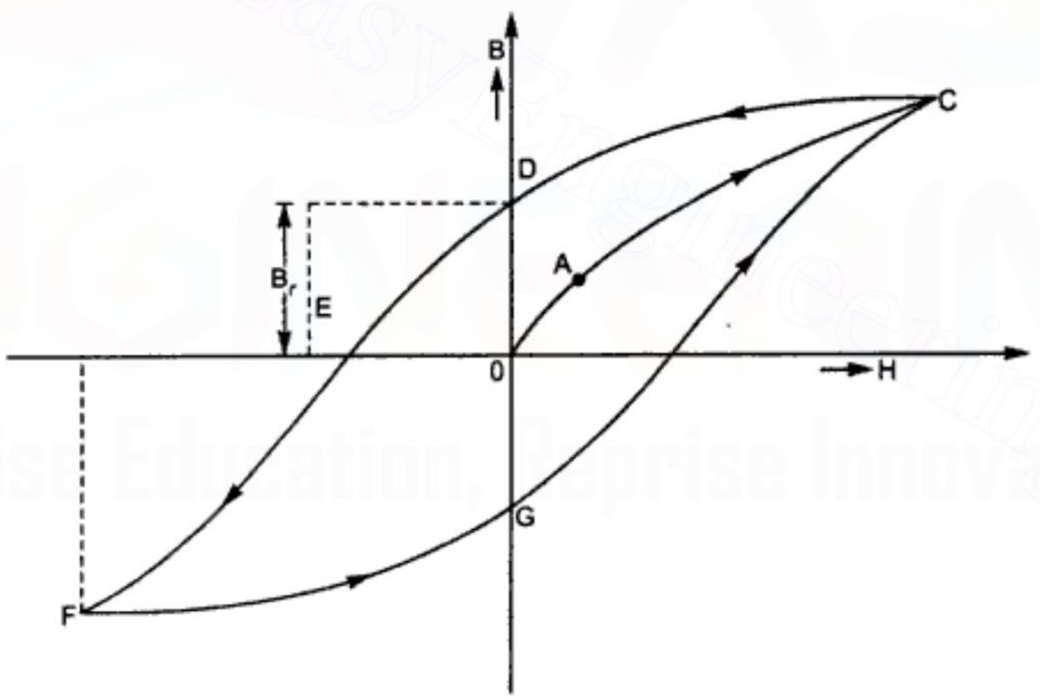

Fig. 5 : *Hysteresis loop.*

Core Losses or Iron Losses

Time varying fluxes produce losses in ferromagnetic materials, known as core loss or iron losses. The core losses consist of Hysteresis and eddy current losses. That is $P_{core} = P_h + P_e$. Both Hysteresis loss and eddy Current loss produce heat in the magnetic circuit.

Hysteresis Loss

When a material is magnetized its domains are aligned in the direction of applied field. If the material is magnetized in the reverse direction the domains swing around to align themselves

Material com direitos autorais
Downloaded From : www.EasyEngineering.net

Downloaded From : www.EasyEngineering.net

in the opposite direction. If there is cyclic reversal of the applied field, the domain rotate to and fro. In this process there is loss power called Hysteresis loss. This loss appears in the form of the heat and raises the temperature of the magnetic material.

It is not convenient to find out the area of the Hystersis loop because B-H curve is non linear, multivalued and no simple mathematical expression can describe the loop. Several empirical formulae for computing the Hysteresis loss Ph have been developed. The following empirical formula was evolved by stein Metz and is widely used.

$$P_h = vK_h B^n{}_m f$$

where v = volume of co,re

K_h = constant whose value depends upon the ferromagnetic material.

B_m = maximum value of flux density

F = freq. of variation of the current i.

The exponent n varies in the range 1.5 to 2.5 depending upon the material. However it is important to note that the Hysteresis loss varies directly as the frequency for a given B_m.

Using good quality silicon steel for core material reduces the Hysteresis loss in a magnetic circuit. The Hysteresis loop for such a material should be narrow.

Eddy Current Loss

Whenever the magnetic flux linking a conducting material circuit changes ,a voltage is induced in it .Consider a solid iron core with, which a time varying flux in linking .The core may be considered to be made up to concentric shells. Since iron is conducting material, each shell may be treated as a closed coil. Each shell with some portion of the flux, hence is induced in each shell. Each induce a voltage causes a current to flow in its closed shell. Since these current do not flow in any clearly defined path, they are eddy currents. Heat is generated due to flow of eddy currents through the core. The power loss due to eddy current is called eddy-current loss.

The eddy current loss per unit volume of a magnetic core subjected to a time varying flux is given by

$$Pe = \left(\frac{1.645}{\rho}\right) * t^2 f^2 B_m{}^2 \frac{w}{m^3}$$

where B_m = maximum flux density

f = freq. of excitation .

t = thickness of core.

ρ = resistively of the core material

The eddy current losses increases the power loss and produce additional temperature rise. Making the core of a number of thin sheets called laminations reduces the eddy current loss. Varnish layer tightly insulates the laminations from one another. Thus the closed paths along which eddy currents flow are reduced in length. The lamination thickness varies from 0.5 to 5 mm in electrical machine and from 0.01 to 0.5 mm in devices used in electronic circuits operating at higher frequency.

Material com direitos autorais
Downloaded From : www.EasyEngineering.net

Downloaded From : www.EasyEngineering.net

Applicaton of Eddy Current

1. Eddy current heating is used for heating metals, for example melting, hardening and other heat treatment processes.
2. Eddy current damping is used in parameters magnet moving coil instruments.
3. Eddy current braking used in induction energy meters.

Stacking Factor

Magnetic circuits are usually constructed by laminations which are coated with insulating varnish Layer. thus small there is a small space present between the successive laminations. Consequently, the effective magnetic cross sectional area is less than the overall area of stack. The rates of effective area of the overall area are called the stacking factor. It is also defined is the ratio of volume occupied by magnetic material to total volume of the core. this factor is important in calculating flux densities in magnetic parts. Stacking factor is usually less than 1.0 ,it approaches 1.0 as the lamination thickness increases.

SOLVED NUMERICAL PROBLEMS

Example 1: *An iron ring of mean circumference 1.2 m is uniformly wound with 400 turns of wire. When a current of 1.5 Amp is passed through the coil, a flux density of 1.25 Wb/m^2 is produced in the iron. Find the relative permeability of iron under these conditions :*

Solution : Number of turns in the coil, N = 400

Current through the coil, i = 1.5 Amp

Thus total ampere turns provided on the ring = 400 × 1.5 = 600

Mean circumference of the ring = 1.2 m

Thus, the length of mean flux path in the ring = 1.2 m

Hence ampere turns per metre of flux length,

$$H = \frac{Ni}{l}$$

$$= \frac{600}{1.2} = 500$$

Flux density produced in the ring = 1.25 Wb/m^2

Thus $$\mu_0\mu_r = \frac{B}{H} = \frac{1.25}{500} = 2.5 \times 10^{-3}$$

Relative permeability of iron ring $m_r = \dfrac{2.5 \times 10^{-3}}{4\pi \times 10^{-7}} = 1990$. **Ans.**

Example 2: *An iron ring with mean diameter of 50 cm has an air gap of 0.9 mm and a winding of 210 turns. If the peremability of the iron is 450 when a current of 1.20 Amp flows through the coil, find the flux density.*

Solution : Let the flux density through the iron ring as well as air gap be B Wb/m^2.

Ampere turns required for iron ring is

Material com direitos autorais
Downloaded From : www.EasyEngineering.net

Downloaded From : www.EasyEngineering.net

$$AT_i = H_i \times l = \frac{B}{\mu_0 \cdot \mu_r} l = \frac{0.5B}{450\mu_0}$$

Similarly, for air gap $AT_g = H_g \times l$

$$= \frac{B \times 0.9 \times 10^{-3}}{\mu_0}$$

Thus total ampere turns required is given by

$$AT_{total} = AT_i + At_g$$

$$= \frac{0.5B}{450\mu_0} + \frac{0.9 \times 10^{-3} B}{\mu_0}$$

Ampere turns supplied $= 210 \times 1.20 = 252.$

$$\frac{0.5B}{450\mu_0} + \frac{0.9 \times 10^{-3} B}{\mu_0} = 252$$

$$\frac{B}{\mu_0}\left[\frac{0.5}{450} + 0.9 \times 10^{-3}\right] = 252$$

$$\frac{B}{\mu_0} + \left[2.01 \times 10^{-3}\right] = 252$$

$$B = \frac{252 \times \mu_0}{2.01 \times 10^{-3}}$$

$$B = \frac{252 \times 4\pi \times 10^{-7}}{2.01 \times 10^{-3}} = 0.158 \text{ Wb/m}^2.$$

Example 3: *A ring shaped electromagnet has an air gap of 6 mm long and 25 cm² in area, the mean length of the core being 50 cm and its cross-section is 9 cm². Calculate the ampere turns required to produce a flux density of 0.75 Wb/m² in the air gap. Assume the permeability of iron as 1600.*

Solution : In air gap, $H = \frac{B}{\mu_0} = \frac{0.75}{4\pi \times 10^{-7}} = 5.97 \times 10^5$ AT/m.

AT required $= H \times l$

$= 5.97 \times 10^5 \times 6 \times 10^{-3} = 3580.98$

In core,

Core flux = Air gap flux

$= 0.75 \times 25 \times 10^{-4} = 1.8 \times 10^{-3}$ Wb

Flux densisty in case $= \frac{\phi}{A} = \frac{1.8 \times 10^{-3}}{9 \times 10^{-4}}$

$= 2$ Wb/m².

$$H = \frac{B}{\mu_r \cdot \mu_0} = \frac{2}{1600 \times 4\pi \times 10^{-7}}$$

$= 994.72$ AT/m.

Here length $= (50 - 0.6) = 49.4$ cm

Material com direitos autorais
Downloaded From : www.EasyEngineering.net

Downloaded From : www.EasyEngineering.net

AT required $= 284.2 \times 0.39$

$= 110.84$

Total AT required is given by

$$AT_{total} = 24.86 + 24.25 + 110.84$$
$$= 159.95. \text{ AT.}$$

Example 5: *A steel ring of 25 cm mean diameter and of circular section 3 cm in diameter has an airgap of 1.5 mm length. It is wound uniformly with 700 turns of wire carrying a current of 2 Amp. Calculate : (i) Magnetic motive force (ii) Flux density (iii) Magnetic flux (iv) Reluctance, (v) Relative permeability of steel ring.*

Nelgect magnetic leakage and assume that iron path takes about 35 percent of total magnetomotive force.

Solution :

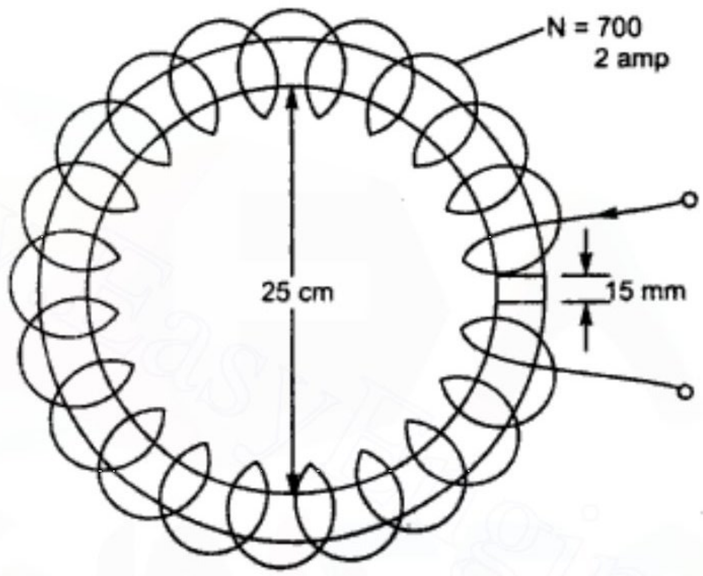

Fig. 7

(*i*) Number of turns provided on steel ring, N = 700

Current carried by the winding in the ring, I = 2.0 Amp

Total ampere turs provided on the ring = $700 \times 2 = 1400$

mmf produced = NI = 1400 AT.

(*ii*) Total ampere turns or mmf = 1400 AT

Iron portion takes 35% of the total mmf. Thus mmf for iron portion

$= 0.35 \times 1400 = 490$ AT

Hence mmf of air gap $= 1400 \times 490$

$= 910$ AT

Ampere turns for the air gap is given by

$$AT_g = 0.796\, B_g A_g \times 10^6$$

Length of air gap, $l_g = 1.5 \text{ mm} = 1.5 \times 10^{-3}$ m

Thus flux density in air gap

$$B_g = \frac{AT_g}{0.796 \times l_g} \times 10^{-6}$$

Copyrighted material
Downloaded From : www.EasyEngineering.net

Downloaded From : www.EasyEngineering.net

$$= \frac{910 \times 10^{-6}}{0.796 \times 1.5 \times 10^{-3}} = 0.762 \text{ Wb/m}^2.$$

(*iii*) Diameter of circular section of the ring = 3 cm

Sectional area $= \frac{\pi}{4}(3)^2 = 7.07 \text{ cm}^2$

$= 7.07 \times 10^{-4} \text{ m}^2.$

Magnetic flux = Flux density × Sectional area

$= 0.762 \times 7.07 \times 10^{-4} = 0.538 \text{ mWb}$

(*iv*) Mmf = Reluctance × flux

or Reluctance $= \frac{\text{mmf}}{\text{flux}} = \frac{1400}{0.538 \times 10^{-3}}$

$= 2.6 \times 10^6 \text{ AT/Wb}.$

(*v*) Total ampere turns, NI = 1400

Length of the mean flux path in the stellring = $\pi \times D_m$

Mean diameter of steel ring D_m = 25 cm.

Thus length of mean flux path in the steel ring

$= \pi \times 25 = 78.57 \text{ cm}$

$= 0.7857 \text{ m}.$

Ampere turns per metre engthof the flux path *i.e.*,

$$H_i = \frac{\text{Ampere turn for Iron part}}{0.7857}$$

$$= \frac{490}{0.7857} = 623.6$$

Now $\frac{B_i}{H_i} = \mu_0 \cdot \mu_r$

$$\mu_r = \frac{B_i}{H_i \cdot \mu_0} = \frac{0.762}{623.6 \times 4\pi \times 10^{-7}} = 972$$

Example 6: *Determine the total mmf acting in the magnetic circuit shown in figure :*

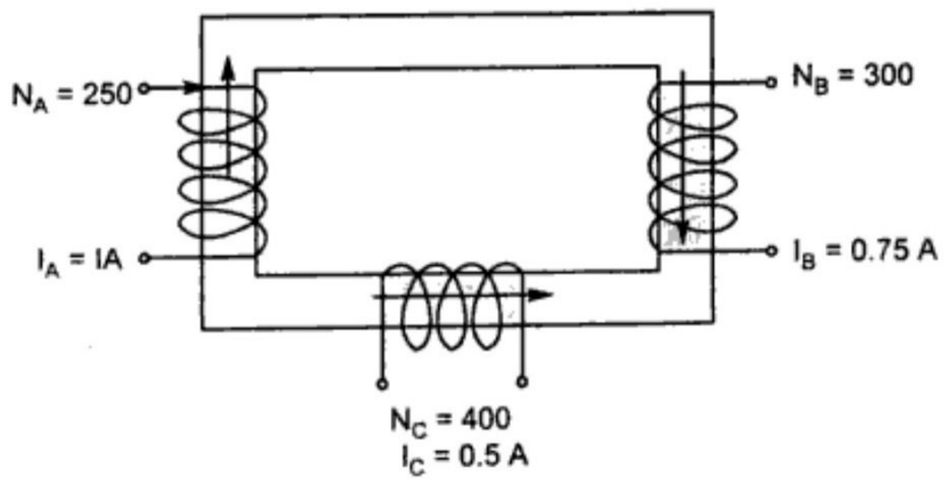

Fig. 8

Copyrighted material
Downloaded From : www.EasyEngineering.net

Downloaded From : www.EasyEngineering.net

$$N_A = 300$$
$$I_A = 0.75 \text{ A}$$
$$N_C = 400$$
$$I_C = 0.5 \text{ A}$$

Solution: Total mmf acting in the circuit $= I_A N_A + I_B N_B - I_C N_C$

$$= 1 \times 250 + 0.75 \times 300 - 0.5 - 400$$
$$= 475 - 200 = 275 \text{ AT.}$$

Example 7: *A total flux of 0.0006 Wb is required in the air gap of an iron ring of cross-section 5.0 cm² and mean length 2.5 m with an air gap of 4.5 mm. Find the number of ampere turns required. Points on the B-H curve for the material of the ring are as follows :*

H (AT/m) :	*200*	*400*	*500*	*600*	*800*	*1000*
B (Wb/m²) :	*0.4*	*0.8*	*1.00*	*1.09*	*1.17*	*1.19*

Solution : Total ampere turns required, AT = Ampere turns the iorn portion, AT_i + ampere turns for gap, AT_g. Drawing B-H curve.

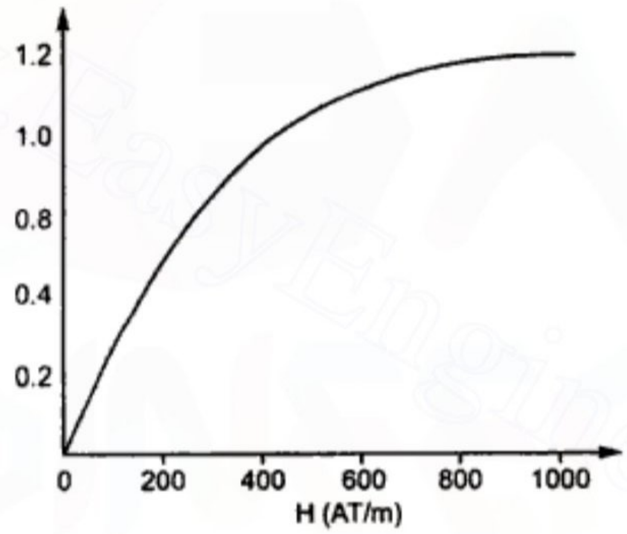

Fig. 9

(*i*) Flux $\phi = 0.0006$ Wb

Cross sectional area of iron ring $= 5.0 \text{ cm}^2$

$$= 5.0 \times 10^{-4} \text{ m}^2$$

Flux density in iron portion $= \dfrac{0.0006}{5.0 \times 10^{-4}} = 1.2 \text{ Wb/m}^2$

From the B-H curve for above flux density (1.2 Wb/m²) the ampere turns required would be 1000.

Mean length of iron ring = 250 am

Length of air gap, $l_g = 4.5$ mm

$= 0.45$ cm

Thus length of mean flux path in the iron portion of the ring,

$$l_i = 250 - 0.45 = 249.55 \text{ cm}$$

Copyrighted material
Downloaded From : www.EasyEngineering.net

Downloaded From : www.EasyEngineering.net

$$= 2.4955 \text{ m.}$$

Thus ampere turns required for iron portion

$$AT_i = 1000 \times 2.4955 = 2495.5$$

(*ii*) Ampere turns required for air gap = $0.796\ B_g\ l_g \times 10^6$

$$= 0.796 \times 1.2 \times 4.5 \times 10^{-3} \times 10^6$$

$$= 4298.4$$

Total ampere turns required = 2495.5 + 4298.4

$$= 6793.9$$

EXERCISES

1. Define mmf, Magnetic field intensity, reluctance and permeability.
   An iron ring has a mean length of 1.5 m and a cross section area of 20 cm^2. It has a radial air gap of 5 mm. The ring is uniformly wound with 250 turns. What direct current would be needed in the coil to produce a flux of 1.0 mWb in the air gap? Asume relative permability of iron as 400 and leakge negligible.
2. Explain with help of suitable diagram (*i*) leakage flux (*ii*) Fringing.
   An iron magnetic circuit has a uniform cross-sectional area of 5 cm^2 and a length of 16 cm. A coil of 100 turns is wound uniformly over the magnetic circuit. When thee current in the coil is 1.4 amp, the total flux is 0.3 mWb ; when the current is 5A, the total flux is 0.5 mWb. For each value of current, calculate (*a*) the magnetising force (*b*) the relative peermeability of the iron.
3. (*a*) Explain with the help of B-H curve. The meaning of the following terms :
   Relative permeability, remanence and co-ercivity.
   (*b*) What is meant by magnetic hysteresis.
   (*c*) What information can be derived from B-H loop.
4. (*a*) Compare the electric and magnetic circuits.
   (*b*) What are different types of magnetic losses? How can they be minimised?
   (*c*) Deduce an expression for the force between two parallel inductors.
5. (*a*) Draw and explain the B-H curves for magnetic material :
   (*b*) What is eddy current loss and under what conditions does it occur ? How can they be minimised ? Mention some application of eddy currents.
6. (*a*) A steel ring has a mean diameter of 16 cm and a cross sectional area of 4 cm^2. Calculate the ampere turns required for producing a flux of 0.75 mWb in the ring.
   (*b*) If the sawtooth cut of 1mm width is now made in the above ring, determine the flux produced assuming the mmf to remain constant. Assume the relative permeability of the mild steel to remain constant at 1000.
7. An iron ring of cross sectional area 9 cm^2 and mean diameter of 40 cm. It is uniformly wound with a coil of 450 turns. When the coil is carrying a current of 2.5 Amp, the flux set up in the ring is found to be 0.009 Wb. Find out the relative permeability of iron at this flux density.

Bahan dengan hak cipta
Downloaded From : www.EasyEngineering.net

Downloaded From : www.EasyEngineering.net

8. An iron ring of mean circumference 50 cm has an airgap of 1mm. It is uniformly wound with a coil having 250 turns. If the relative permeability of iron is 400, when a current of 1.2 A flows through the coil, calculate the flux density.
9. A cast steel electromagnet has an iron path of mean length 40 cm and an air gap of 1.5 mm. It is desired to produce a flux density of 1.0 Wb/m^2 in the gap by putting a coil on the electromagnet. Assuming negligible leakage and fringing, find the total ampere turns required. B-H curve may be plotted as per the datas given below :

H (AT/m) :	500	1000	2000	3000	4000
B (Wb/m^2) :	0.6	1.05	1.38	1.5	1.58

10. An electromagnet has mean length of iron path of 48 cm with the area of cross-section of core 10 cm^2. It has an air gap of 0.5 cm width. The electromagnetic is excited by two coils each having 450 turns. When the current in the coil is 0.8 Amp. The resulting flux density gives a relative permeability of 1200. Neglect leakage and fringing. Calculate (*i*) reluctance of magnetic circuit (*ii*) reluctance of air gap (*iii*) total reluctance (*iv*) total flux (*v*) flux density in the gap.

Materiál chráněný autorskými právy
Downloaded From : www.EasyEngineering.net

Downloaded From : www.EasyEngineering.net

$$= E_{max} \sin (2\pi/T)t$$

Instantaneous value of induced current

$$I = I_{max} \sin (2\pi ft)$$

$$= I_{max} \sin\left(\frac{2\pi}{T}\right)t$$

where T is called the periodic time *i.e.* the time taken to complete one cycle

i.e. $$f = \frac{1}{T}$$

If the e.m.f. or current value as given by equations, from instant to instant are plotted along *y*-axis against time along *x*-axis, the graph will be as shown in Fig. 2.

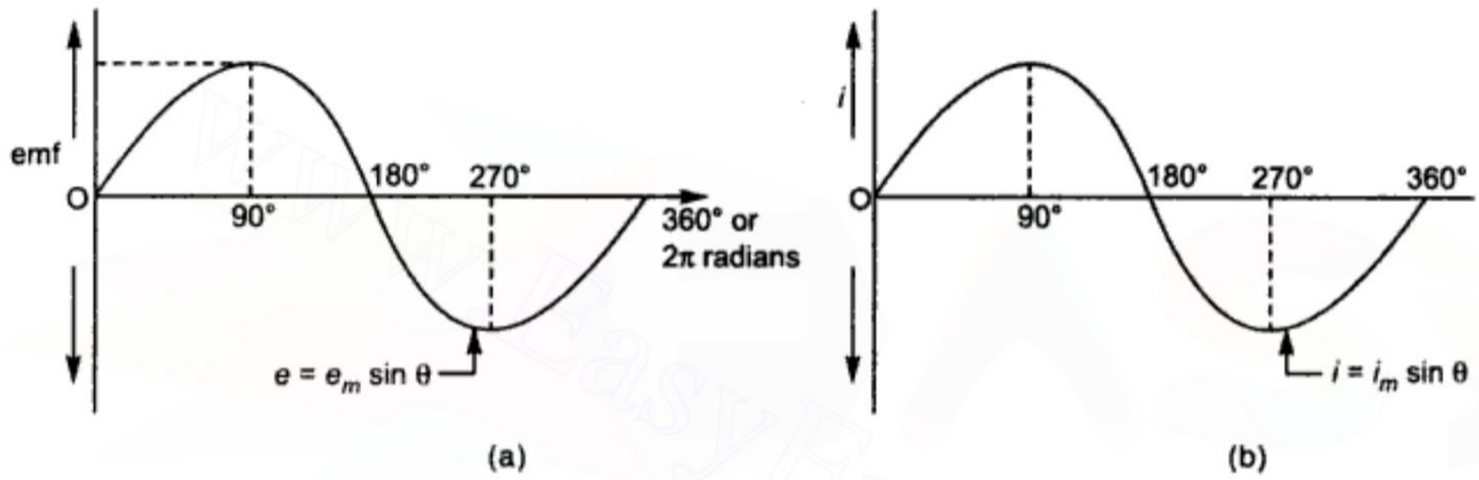

Fig. 2

Such a graph of e.m.f. or current is called a sinusoidal alternating voltage or current. The trace OPQRS of the graph completes one cycle and consists of two alternations, one positive and other negative. In practice horizontal axis is in marked out in radians or degrees instead of seconds.

Cycle

One complete alternation of a set of values of e.m.f. or current is called a cycle. Each complete cycle consists of the positive half-cycle above the horizontal axis and the negative half-cycle below the horizontal axis. Hence in the positive half-cycle all the values of the current are positive, while in the negative half-cycle all the values of the current are negative.

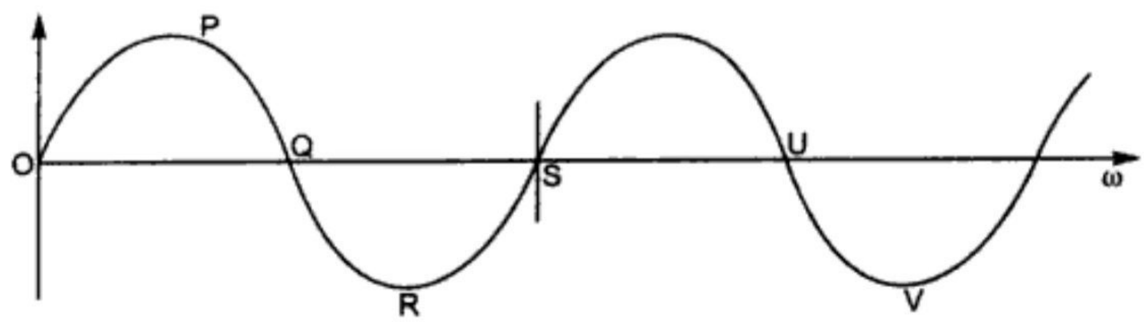

Fig. 3

Copyrighted material
Downloaded From : www.EasyEngineering.net

Downloaded From : www.EasyEngineering.net

Frequency

Number of cycle completed in one second is called the frequency. It is devoted f and is expressed in hertz (Hz) or cycle per second (1 Hz =1 c/s). Standard frequency generation adopted 50 Hz or 60 Hz (in India 50 Hz).

Period

The time required to complete one cycle its called periodic time or period. It is devoted by T and is expressed in second. The relationship between frequency & periodic time is given by

$$T = \frac{1}{f} \text{ sec}$$

Angular Frequency

In every revolution the coil turns through an angle 2π radian. The time taken for one revolutions T seconds.

Since, $\theta = 2\pi$ when $t = T$

$$\omega = 2\pi f \text{ rad/sec}$$

While $f = \frac{1}{T}$ Hz

$$\omega = 2\pi . f \text{ radian/sec}$$

where ω is called the angular frequency.

Instantaneous Value

The value of the alternating quantity at particular instant (time) is called the instantaneous value. It varies from time to time. Instantaneous values are denoted by small (lower case) letters. Thus i denotes the instantaneous current and v denotes the instantaneous voltage.

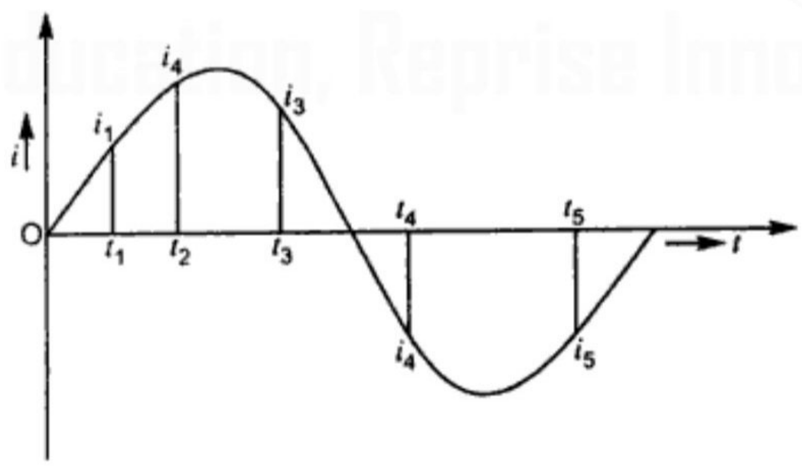

Fig. 4

Peak or Maximum Value

The maximum value of alternating quantity attained in a cycle or highest instantaneous value is called peak or maximum, crest value or the amplitude. It is denoted by a capital letter with subscript m. So I_m or V_m denotes the maximum value of current or voltage.

Copyrighted material
Downloaded From : www.EasyEngineering.net

Downloaded From : www.EasyEngineering.net

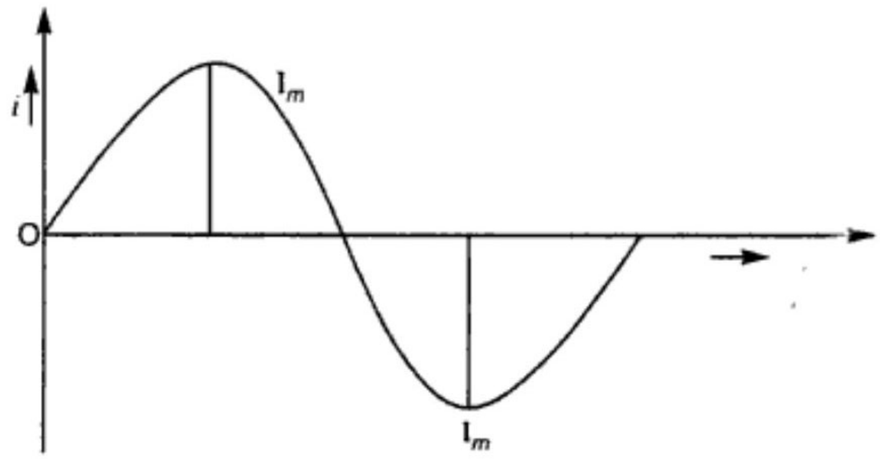

Fig. 5

Average or Mean Value

The average is mean value the current or voltage of an alternative quantity over a given is interval is sum of all instantaneous values divided by the number of values taken over that interval. The average value (arithmetic mean) over the complete cycle will be zero for sinusoidal as well as non-sinusoidal wave; provided the wave shape symmetrical.

Determination of Average or Mean Value

Basically average value of curve is the average height of the curve. The average height of the curve is found by dividing the area under the curve by the length of interval of the curve over which the curve extends.

$$\text{Average value} = \frac{\text{Area under the curve}}{\text{Length of the interval of the curve}}$$

The average value can be determined by:

1. The mid-ordinate method
2. The method of integration.

Mid-ordinate Method: In this method the area under the curve is divided into n number of strips of equal width by vertical lines. At the centre of each strip a vertical line in drawn up to the curve such vertical lines are called the mid ordinates of the strips. At the equal intervals mid ordinates are shown by full lines. Let the height of each be $i_1, i_2, i_3 \ldots i_n$. Each mid ordinates is taken as the average height of its strip. Hence the average height of the curve is determined by taking the average value of these n mid-ordinates. Number of the strips must be as more as possible to for better accuracy.

$$\text{Average height of the curve} = \frac{(i_1 + i_2 + i_3 + \ldots + i_n)}{n}$$

This method is convenient for non-sinusoidal waves.

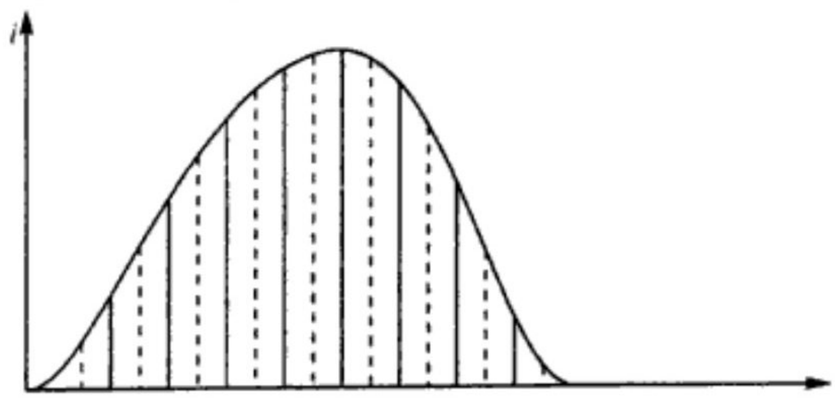

Fig. 6 *Mid-ordinate Method.*

Copyrighted material
Downloaded From : www.EasyEngineering.net

Downloaded From : www.EasyEngineering.net

Method of Integration: In this method an infinite number of mid-ordinates are used. For a given curve a shaded strip of width $d\theta$ is considered.

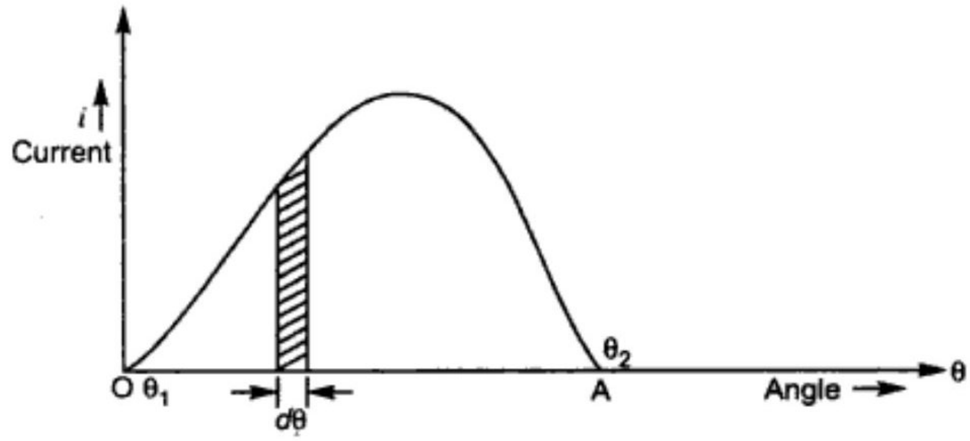

Fig. 7

The area of strip = $id\theta$. The area under the curve and the horizontal axis will be the sum of all such strips. The curve has the limits from θ_1 to θ_2. The length of the base of the curve is therefore,

$$OA = (\theta_2 - \theta_1)$$

$$\text{Average length of the curve} = \frac{\text{Area under the curve}}{\text{Base of the curve}}$$

$$= \frac{1}{(\theta_2 - \theta_1)} \int id\theta$$

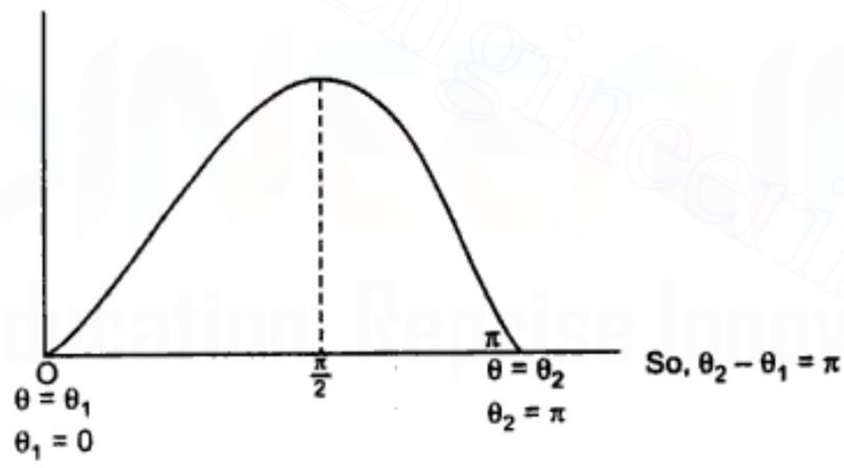

Fig. 8

Average Value of Sine Wave: Sine wave may be expressed as

$$i = I_{max} \sin\theta$$

$$\text{Average value over one half cycle} = \frac{1}{\pi}\int_0^{\pi} I_{max} \sin\theta . d\theta$$

$$= \frac{I_{max}}{\pi}\left[-\cos\theta\right]_0^{\pi}$$

$$= \frac{2\,I_{max}}{\pi} = \frac{I_{max}}{\frac{\pi}{2}} = 0.637\, I_{max}$$

Copyrighted material
Downloaded From : www.EasyEngineering.net

Downloaded From : www.EasyEngineering.net

Thus the average value of current for a sine wave

$$= 0.637 \times \text{maximum value of current.}$$

Root Mean Square or Effective Value: The alternating voltage or current varies from instant to instant. It becomes maximum at a certain instead only. In specifying such a varying quantity, its maximum or peak value is rarely used. Therefore, it is necessary to determine an equivalent direct current, which will produce the same amount of work or heat in the same time of interval in the same the resister. Usually the values of alternating voltage or current are taken as rms or effective values; unless specified. Thus effective value is the dc equivalent of a.c.

Determination or r.m.s. Value by Mid-ordinate Method

Consider the positive half cycle of a non-sinusoidal alternating current wave shape in Fig. 9. Let this cycle of periodic time T be divided into n strips, each of width $\frac{T}{n}$, with mid-ordinate i_1, i_2, $i_3 \ldots i_n$ Suppose that this current flows through a resister R.Consider each mid-ordinate to be the mean value of the current over the interval of time $\frac{T}{n}$ represented by its own strip.

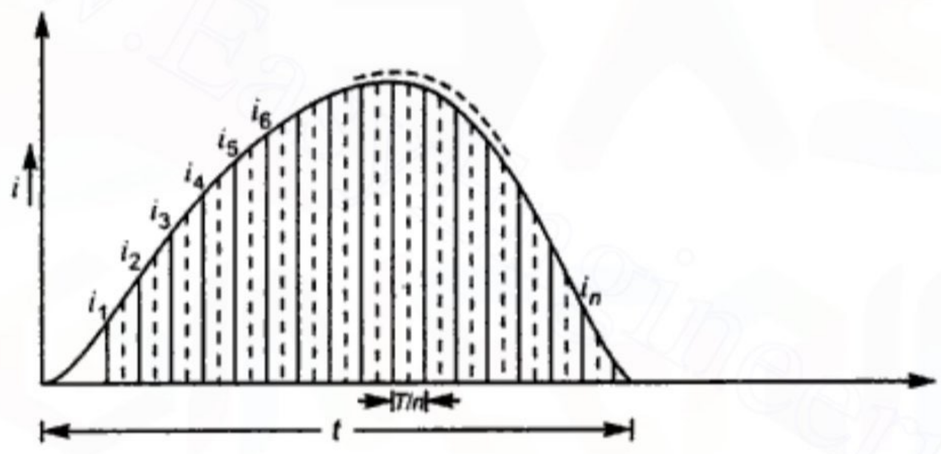

Fig. 9: *RMS value of AC wave I*

Then work done or heat produced in different interval will be

By $\quad i_1 \quad W_1 \text{ or } H_1 = i_1^2 \dfrac{R.T}{n}$

By $\quad i_2 \quad W_2 \text{ or } H_2 = i_2^2 \dfrac{R.T}{n}$

By $\quad i_n \quad W_n \text{ or } H_n = i_n^2 \dfrac{R.T}{n}$

Thus total work done or heat produced in T seconds on applying alternating current wave to a resistance R.

$$H_{ac} \text{ or } W_{ac} = \left[\frac{RT.(i_1 + i_2 + i_3 + \ldots + i_n)}{n}\right]; \text{ joules}$$

Heat produced by the equivalent direct current I in resistor R in time T seconds is given by

$$H_{dc} \text{ or } W_{dc} = I^2RT$$

If $\quad H_{dc} = H_{ac}$

Urheberrechtlich geschütztes Material
Downloaded From : www.EasyEngineering.net

Downloaded From : www.EasyEngineering.net

Then,
$$I^2RT = \frac{\left(i_1^2 + i_2^2 + i_3^2 + \ldots + i_n^2\right) R.T}{n}$$

$$I^2 = \frac{\left(i_1^2 + i_2^2 + i_3^2 + \ldots + i_n^2\right)}{n}$$

$$I = \sqrt{\left[\frac{\left(i_1^2 + i_2^2 + i_3^2 + \ldots + i_n^2\right)}{n}\right]}$$

= Square root of the mean of the squares of the current

= Root-mean-square (rms) value of the current

$= I_{rms}$

Similarly, rms value of the alternative voltage can be given by

$$V_{rms} = \sqrt{\left(\text{Mean value of } (V)^2\right)}$$

Hence rms value of a quantity concerning to any type of alternating wave shape can be found as following:

1. Take the squares of the ordinates at equal intervals over one positive half cycle. Let these values be $(i_1, i_2, i_3 \ldots i_n)$ then $(i_1^2, i_2^2, i_3^2 \ldots i_n^2)$
2. Take the mean values of the above, and
3. Take the square root of the obtained mean value.

Determination or rms Value by Method of Integration

Work done or heat produced by an alternating of instantaneous value i in resister R in time dt is i^2Rdt. Therefore total heat produced in one cycle is given by

$$W_{ac} \text{ or } H_{ac} = \int_0^T i^2 R dt$$

Heat produced is equivalent to direct current I in resistance R in time 'T' is given by:-

$$H_{dc} = I^2RT$$

If, $H_{dc} = H_{ac}$,then

$$I^2RT = \int_0^T i^2 R dt$$

or,
$$I^2 = \frac{1}{T}\int_0^T i^2 dt$$

or,
$$I = \int_0^T \int_0^T i^2 dt$$

Rms Value of Sine Wave

Analytical method

Let $i = I_{max} \sin \theta$

Mean value of (i^2) over one complete cycle

Urheberrechtlich geschütztes Material
Downloaded From : www.EasyEngineering.net

Downloaded From : www.EasyEngineering.net

$$= \frac{1}{2\pi}\int_0^{2\pi} i^2 d\theta$$

$$= \frac{1}{2\pi}\int_0^{2\pi} (I_{max} \sin\theta)^2 d\theta = \frac{I_{max}}{2\pi}\int_0^{2\pi} \sin^2\theta d\theta$$

But $$\sin^2\theta = \frac{(1-\cos 2\theta)}{2}$$

Thus mean value of (i^2) over one complete cycle is expressed as

$$= \frac{I_{max}^2}{2\pi}\int_0^{2\pi}\left[\frac{(1-\cos 2\theta)}{2}\right] d\theta$$

$$= \frac{I_{max}^2}{2\pi}\left[\frac{\theta}{2-\sin 2\theta}\frac{\theta}{4}\right]_0^{2\pi}$$

$$= \frac{I_{max}^2}{2\pi}\left[\frac{2\pi}{2-0}\right] = \frac{I^2{}_{Max}}{2}$$

Hence rms value of current $= \sqrt{\text{mean value of } (i^2)}$

$$= \frac{\sqrt{I^2{}_{max}}}{2} = \frac{I_{max}}{\sqrt{2}} = 0.707\, I_{max}$$

Thus for sinusoidal waveform, rms value of current will be 0.707 times the maximum value of current. Similarly for voltages.

Form Factor

The form factor of an alternating wave shape is defined as the ratio of its rms value to the average value of a half-cycle.

$$\text{Form factor } (K_f) = \frac{(\text{Rms value of current})}{\text{Average value of current}}$$

For sine wave, $$K_f = \frac{0.707\ Imax}{0.637\ Imax}$$

$$K_f = 1.11$$

Peak Factor

The peak factor of an alternating wave shape is defined as the ratio its maximum value to the rms value.

$$\text{Peak factor } (K_f) = \frac{\text{Maximum value of current}}{\text{Rms value of current}}$$

This is also called crest factor, or amplitude factor

Urheberrechtlich geschütztes Material
Downloaded From : www.EasyEngineering.net

Downloaded From : www.EasyEngineering.net

For a sine wave

$$\text{Peak factor } K_P = \frac{I_{max}}{\left(\frac{I_{max}}{\sqrt{2}}\right)} = \sqrt{2} = 1.414$$

The form factor and peak factor gives the idea about the shape of a wave form. The more pointed the peak of a wave, the higher are the value of these factors.

For rectangular wave form,

Average value ≈ maximum value ≈ rms value

So, both, $K_f = K_p = 1$

Phase and Phase Difference

Alternating wave shapes are normally represented by their maximum values and the frequency of alternations. Their instantaneous values are different at different interval of time. When two alternating quantity have the same phase angle, they are said to be in phase with each other or when they reach their maximum and zero values at the same time, though their maximum values may be different in magnitude.

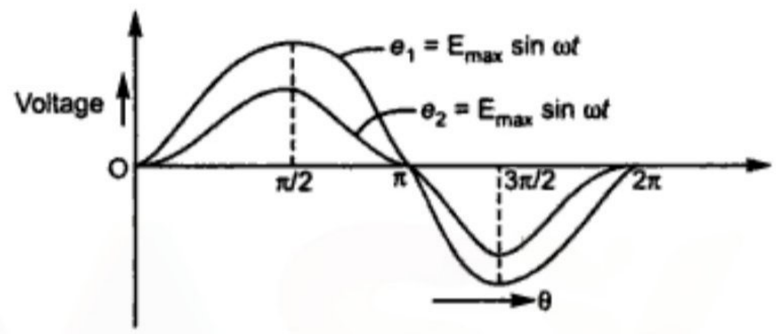

Fig. 10. *Voltage wave shapes in phase.*

Now consider the sinusoidal alternating voltage shape have the same maximum value and the same frequency. However, there may be an important difference in these wave shapes. These waves become zero and maximum at different instants. Suppose the voltage wave shape e_1, e_2, e_3 are shown in Fig. 11.

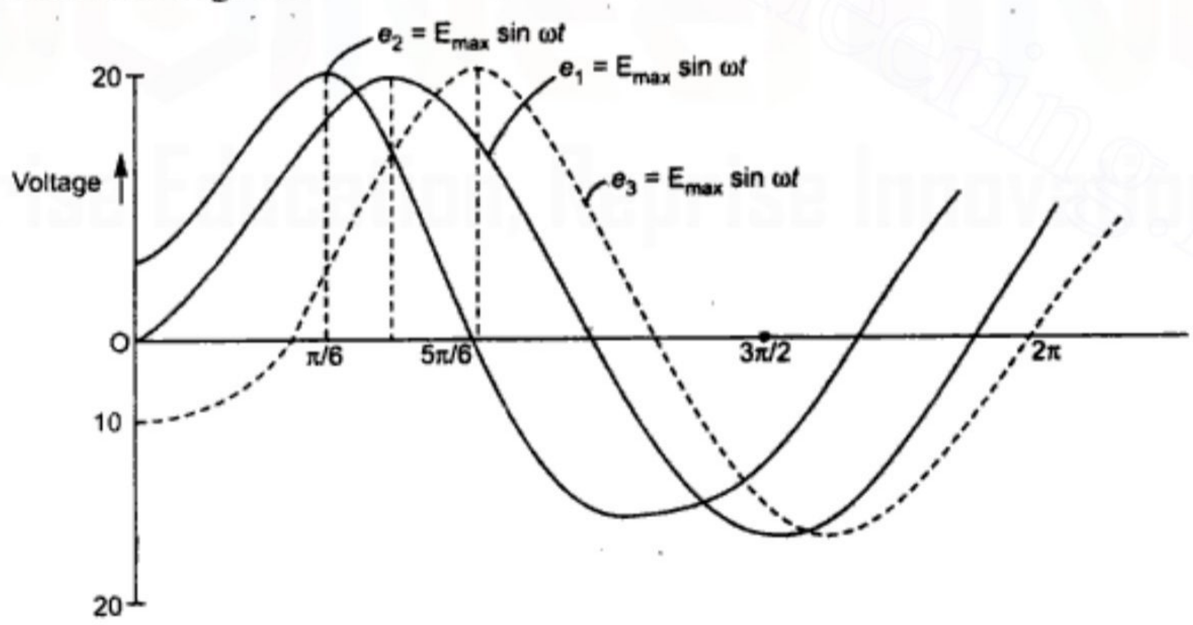

Fig. 11. *Phase difference between voltage waves.*

Wave Form	*Maximum point*	*Minimum point*
e_1	$\theta = \frac{\pi}{2}$	$\theta = 0$
e_2	$\theta = 60°$ or $\frac{\pi}{3}$	$\theta = 150°$ or $\frac{5\pi}{6}$

Urheberrechtlich geschütztes Material
Downloaded From : www.EasyEngineering.net

Downloaded From : www.EasyEngineering.net

e_3 $\theta = \frac{2\pi}{3}$ or $120°$ $\theta = 210°$ or $\frac{70}{6}$

The phase difference between e_1 and e_2 is clearly 30° and between e_1 and e_3 in also 30° but e_3 lags voltage wave e_1.

Therefore following conclusions can be drawn with regard to the phase difference between the various alternating waves shapes quantities.

1. A lagging quantity (Alternating voltage or current) is one, which attains its maximum, or zero value latter than the other quantity with which it is being compared.
2. A leading quantity (Alternating voltage or current) is one, which attains its maximum, or zero values earlier as compared to the other quantity.
3. A minus sign denotes lag with regard of phase difference.
4. A positive or plus sign denotes lead with regard to phase difference.

Phasor Diagram of Alternating Quantity

In practice more than one sinusoidal quantity may be involved in ac circuit calculations. All these quantities may be represented on the same diagram by drawing phasor inclined at different angles to the reference line. If these phasors have one same frequency, they will rotate with the same angular speed ω.Their phases will change with time, but the between any two phasors will remain constant with time whatever be their position. It is the relative position of the phasors or the phase difference, which is important in ac calculations.

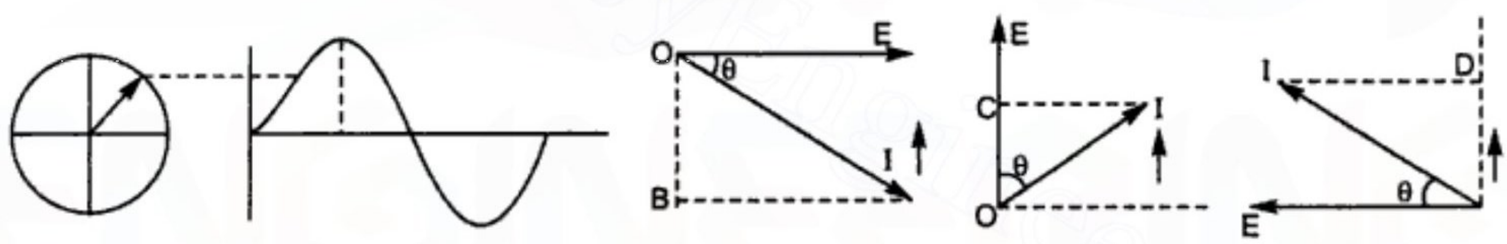

Fig. 12. *Phasor representation of alternating quantity.*

Fig. 12 shows a phases OA representing the maximum value of alternating quantity following the Sine law OA ≈ I_{max}. Let this phasor about a fixed axis O at a uniform angular velocity in the anti– clockwise direction. When Phasor OA is rotated through an angle θ from position it occupied when the current was zero. The projection of the phasor OA on the vertical axis gives the instantaneous value of current at an angle θ (OA sin θ).The value of current corresponding to various values of θ are given by

θ: 0, 30°, 60°, 90°, 120°, 150°, 180°, 210°, 270°, 360°

Thus the phasor is straight line of fixed magnitude rotating about one of its ends at a uniform angular velocity. From Figure drawn above, it is clear that when the instantaneous value of voltage E is zero and becoming positive as instant latter, where as the instantaneous value of current I is negative (equals OB) and diminishing. After quarter of a period, the instantaneous value of voltage becomes positive maximum, Where as current is positive (equal to OC) and increasing. The phase angle θ between voltage and current phasor remains constant in all the cases discussed above. Hence the relative position of the voltage phasor with current phasor at any instant is same.

Copyrighted material
Downloaded From : www.EasyEngineering.net

Downloaded From : www.EasyEngineering.net

Addition and Subtraction of Phasors

In phasor diagrams for ac circuits as shown in Fig. 13, the addition and subtraction of phasors representing their rms values, have to be carried out very often. In such circuits, the addition/subtraction of phasors becomes essential to find out the resultant voltage or current. The addition/subtraction of phasor follows the rules, which are used for vectors. Hence the phasor addition may be performed either by graphically or analytically. The phasor addition can be done more quickly and easily as compared with the waveform addition or analytical method.

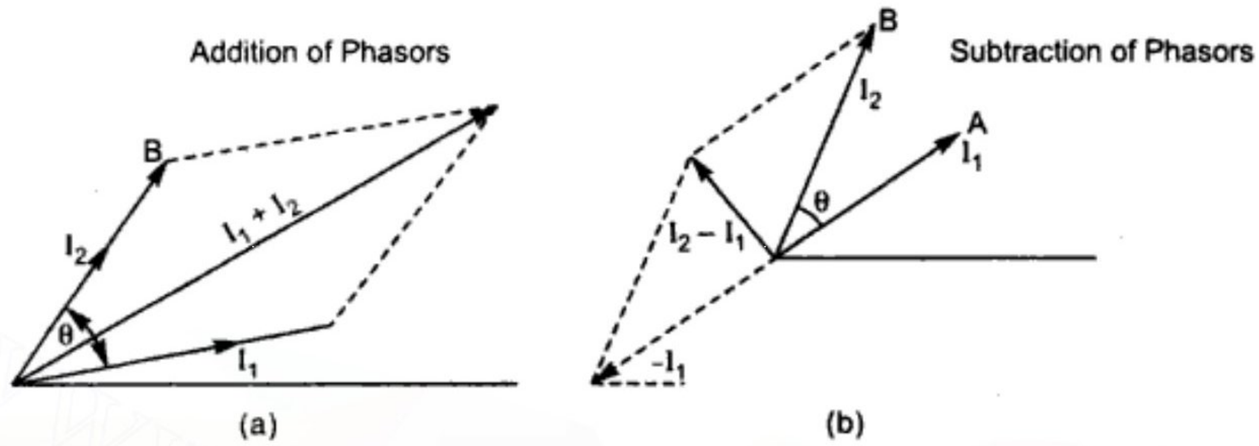

Fig. 13. *Addition and subtractions of phasors.*

The phasors E_1(OA) and E_2 (OB) represents the rms values of the two alternating current having the same frequency. The current phasor I_2 is leading the phasor I_1 by an angle θ. The resultant voltage can be found by adding these two phasors. The addition these two phasors is carried out according to the parallelogram law. The parallelogram OACB is completed and the diagonal OC represents the resultant voltage *i.e.* the phasor sum of the phasors E_1 and E_2.

Similarly, in subtraction if E_1 phasor is to be subtracted from E_2. Phasor OA representing E_1 is extended in reverse direction so that OC is equal OA in magnitude. Parallelogram OBDC is then completed with the diagonal OD of the parallelogram representing the phasor difference of two phasors E_2 and E_1.

SOLVED NUMERICAL PROBLEMS

Example 1: *A sinusoidal alternating current of frequency 25 Hz has a maximum value of 125 A. How long will it take for the current to attain values of 25 A, 50 A and 100 A.*

Solution: The alternating current wave following sinusoidal low is expressed as

$$i = I_{max} \sin(\omega t)$$

$$= I_{max} \times \sin(2\pi F t)$$

$$I_{max} = 125 \text{ A}$$

$$f = 25 \text{ Hz}$$

Thus instantaneous value of current

$$i = 125 \sin(2\pi \times 25t)$$

(*a*) Instantaneous value of current

$$i = 25 \text{ A}$$

Copyrighted material
Downloaded From : www.EasyEngineering.net

Downloaded From : www.EasyEngineering.net

Thus, $$25 = 125 \sin (50 \pi t)$$

$$\sin (50 \pi t) = \frac{25}{125} = 0.2$$

$$= \sin 11.5°$$

Hence $$50 \times 180° \times t = 11.5$$

$$t = \frac{11.5}{50 \times 180} = 0.00128 \text{ sec.}$$

(*b*) Instantaneous value of current $i = 50$ A

$$50 = 125 \sin (50 \pi t)$$

$$\sin (50 \pi t) = \frac{50}{125} = 0.4$$

$$(50 \pi t) = 23.58°$$

$$50 \times 180 \times t = 23.58°$$

$$t = \frac{23.58}{50 \times 180}$$

$$t = 2.61 \times 10^{-3} \text{ sec.}$$

$$t = 2.61 \text{ m sec.}$$

(*c*) Instantaneous current $i = 100$ A

$$100 = 125 \sin (50 \pi t)$$

$$\frac{100}{125} = \sin (\pi t)$$

$$\sin (50 \pi t) = 0.8$$

$$50 \pi t = 53.13$$

$$t = \frac{53.13}{50 \times 180°}$$

$$t = 5.90 \text{ m sec.}$$

Example 2: *Find the rate of change of voltage per second of an emf wave given by*

$$e = 125 \sin (2p \times 50t)$$

0.005 and 0.01 sec after the voltage wave passes through zero and is increasing in a positive direction.

Solution: $$e = 125 \sin (2\pi \times 50t)$$

Rate of change of voltage per second

$$\frac{de}{dt} = 125 \times 100\pi \cos (1\omega \times \pi \times t)$$

$$= 125000 \pi \cos (100 \times 180° \times t)$$

Copyrighted material
Downloaded From : www.EasyEngineering.net

Downloaded From : www.EasyEngineering.net

(*i*) At $t = 0.005$ sec

$$\frac{de_1}{dt} = 12{,}500\,\pi \cos(100 \times 180 \times 0.005)$$

$$= 0 \text{ V/s.}$$

(*ii*) At $t = 0.01$ sec.

$$\frac{de_2}{dt} = 12500\,\pi \cos(100 \times 180 \times 0.01)$$

$$= -12500\,\pi$$

$$= -39250 \text{ V/s.}$$

Example 3: *A sinusoidal current wave is given by*

$$i = 30 \sin(120\pi t) \text{ then calculate the following :}$$

(i) the highest rate of change of current.

(ii) the average value

(iii) Root mean square value (RMS) and

(iv) the time interval between a maximum value and the next zero value.

Solution:

(*i*) $$i = 30 \sin(120\pi \times t)$$

Differentiating it w.r.t. time

$$\frac{di}{dt} = 30 \times 120\pi \cos(120\pi \times t)$$

The rate of change of current will be highest when $\cos(120\pi \times t)$ becomes equal to 1.

Therefore, highest rate of change of current $= 30 \times 120 \times \pi$

$$= 30 \times 120 \times 3.14$$

$$= 11314.28 \text{ A/s.}$$

(*ii*) $$i = 30 \sin(120\pi \times t)$$

The frequency of given alternating quantity, $\phi = 50$ Hz.

Time period, $$T = \frac{1}{f} = \frac{1}{50} = 0.025$$

Thus, the positive half of the wave be completed in 0.01 s.

Mean value of current over half cycle

$$= \frac{1}{0.01}\int_0^{0.01} 30 \sin(120\,\pi t)\,dt$$

$$= \frac{30}{0.01} \times \frac{1}{120\pi}\left[-\cos(120 \times 180^\circ \times t)\right]_0^{0.01}$$

$$= \frac{30}{0.01 \times 120 \times 3.14}[2.5] = \frac{30 \times 2.5}{3.768} = 19.90 \text{ A.}$$

Copyrighted material
Downloaded From : www.EasyEngineering.net

Downloaded From : www.EasyEngineering.net

The average value of the given current wave = 19.90 A.

(*iii*) $i = 30 \sin(120\pi t) = 30 \sin\theta$

Mean value of i^2

$$= \frac{1}{2\pi}\int_0^{2\pi} i^2\, d\theta = \frac{1}{2\pi}\int_0^{2\pi}\left[30\sin(120\pi t)^2\right] d\theta$$

$$= \frac{1}{2\pi}\int_0^{2\pi}(30\sin\theta)^2\, d\theta = \frac{900}{2\pi}\int_0^{2\pi}\left(\frac{1-\cos 2\theta}{2}\right)^2 d\theta$$

$$= \frac{900}{2\pi}\left[\frac{\theta}{2} - \frac{\sin 2\theta}{4}\right]_0^{2\pi} = \frac{900}{2\pi}\times\pi = 450$$

Hence, rms value of current

$$I = \sqrt{\text{Mean value of } i^2}$$

$$= \sqrt{450} = 21.22 \text{ A}$$

(*iv*) $i = 30\sin(120\pi t)$

$$= 30\sin(120\times 180^\circ \times t)$$

This wave shape will have maximum value of current of 50 A that will occur when sin (120 × 180° × t) becomes 1. *i.e.*,

$$\sin(120\times 180^\circ\times t) = 1$$

$$120\times 180^\circ\times t = \sin^{-1}(1)$$

$$120\times 180^\circ\times t = 90^\circ$$

$$t = \frac{90^\circ}{120\times 180^\circ} = \frac{90^\circ}{21600} = 0.004 \text{ sec.}$$

Thus, current becomes maximum after 0.004 S from its earlier zero value.

Therefore,

$$\sin(120\times 180\times t) = 0$$

$$120\times 180\times t = 180^\circ$$

$$t = \frac{180}{120\times 180} = 0.01 \text{ s.}$$

Interval will be 0.004 s to 0.01 sec.

Example 4: *The minimum value of a sinusoidal alternating current having frequency 60 Hz is 20 A. Determine the equation for instantaneous value of the alternating current. Calculate i at 0.002 S and 0.015 S. Also obtain the time at which current is 15 A.*

Solution: We know that,

$$W = 2\pi f = 2\pi\times 60$$

$$= 120\pi \text{ rad./s.}$$

Copyrighted material
Downloaded From : www.EasyEngineering.net

Downloaded From : www.EasyEngineering.net

The equation for instantaneous value alternating current is

$$i = 20 \sin 120\pi t$$

Now, at 0.002 s

$$i = 20 \sin (120\pi \times 0.002)$$

$$i = 0.2630 \text{ A}$$

and AT 0.015 s

$$i = 20 \sin (120\pi \times 0.015)$$

$$= 1.9697 \text{ A}$$

Now, time at current 15 A will be

$$15 = 20 \sin 120\pi t_1$$

$$t_1 = \frac{15}{20 \sin 120\pi} = \frac{15}{5.7806} = 2.594 \text{ m sec.}$$

Example 5: *If a half wave rectified sinusoidal current having I_m = 15 A delayed by an angle q = 45°, calculate the average Rms value and form factor.*

Solution.

$$I_m = \frac{15}{2\pi}\int_{\pi/4}^{\pi} \sin\theta \, d\theta = \frac{15}{2\pi}[-\cos\theta]_{\pi/4}^{\pi}$$

$$= \frac{15}{2\pi}\left[-\cos\pi + \cos\frac{\pi}{4}\right] = \frac{15}{2\pi}[1 + 0.707]$$

$$= \frac{15 \times 1.707}{2 \times 3.14} = \frac{25.605}{6.28} = 4.077 \text{ A}$$

$$I_{rms}^2 = \frac{(15)^2}{4\pi}\int_{\pi/4}^{\pi} (-\cos 2\theta)\, d\theta = \frac{225}{4\pi}\left[\pi - \frac{\pi}{4} - \frac{1}{2}\left(\sin 2\pi - \sin\frac{\pi}{2}\right)\right]$$

$$= \frac{56.25}{3.14}\left[\frac{3\pi}{4} + \frac{1}{2}\right] = 17.91\,[2.355 + 0.5]$$

$$I_{rms}^2 = 51.133 \text{ A}$$

Thus, $$\text{Form factor} = \frac{\text{Rms Value}}{\text{Average Value}} = \frac{51.133}{4.077} = 12.541.$$

Example 6: *An alternating current of peak value 45 A has the following wave forms in turn :*

(a) Sinusoidal

(b) Full wave rectified sinusoidal,

(c) Rectangular ; and

(d) Triangular.

Solution: (*a*) Peak value of current wave = 45 A

Instantaneous value of the current wave can be exposed by the equation,

$$i = 45 \sin \omega t = 45 \sin \theta$$

Copyrighted material
Downloaded From : www.EasyEngineering.net

Downloaded From : www.EasyEngineering.net

Such a wave shape can be shown below

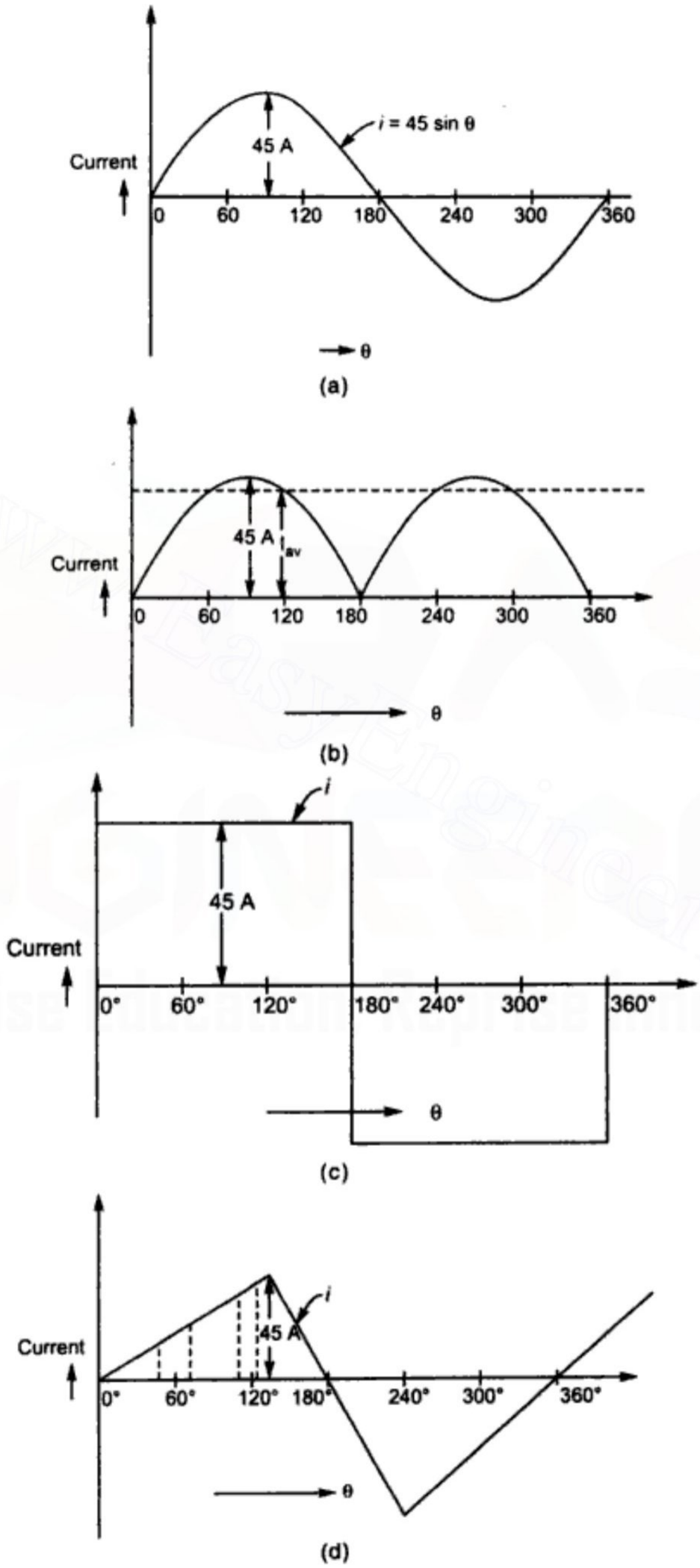

Fig. 14

Copyrighted material
Downloaded From : www.EasyEngineering.net

Downloaded From : www.EasyEngineering.net

When sinusoidal current is passed through a moving coil ameter connected in series, it reads the average value of the current wave over the complete cycle. So, average value of current over one complete cycle.

$$I_m = \frac{1}{2\pi}\int_0^{2\pi} 45 \sin\theta \, d\theta$$

$$= \frac{45}{2\pi}\left[-\cos\theta\right]_0^{2\pi} = 0$$

Hence, ammeter reads zero in case of moving coil instruments.

Rms value of this current wave will be

$$I_{rms} = \sqrt{\text{mean value of } (i)^2}$$

Mean value of $$i^2 = \frac{1}{2\pi}\int_0^{2\pi} (45 \sin\theta)^2 \, d\theta$$

$$= \frac{2025}{2\pi}\int_0^{2\pi}\left(\frac{1-\cos 2\theta}{2}\right) d\theta$$

$$= \frac{2025}{2\pi}\left[\frac{\theta}{2} - \frac{\sin 2\theta}{4}\right]_0^{2\pi} = \frac{2025}{2} = 1012.5 \text{ A}$$

Rms value of this current wave will be

$$I_{rms} = \sqrt{1012.5} = 31.819 \text{ A}$$

Similarly for all the wave forms shown, currents can be calculated in similar fashion.

Example 7: *Determine the phase difference between the respective emf and current. Also state the condition of frequency in each case.*

(i) $$e = 300 \sin\left(350.14t + \frac{\pi}{12}\right)$$

$$i = 30 \sin (350.14t)$$

(ii) $$e = E_{max} \sin\left(\omega t + \frac{\pi}{3}\right); \; i = I_{max} \sin \omega t$$

(iii) $$e = E_{max} \sin (\omega t + a)$$

$$i = \frac{E_{max}}{\sqrt{R^2 + X^2}} \sin\left(\omega t - \tan^{-1}\frac{X}{R}\right)$$

Solution: (*i*) Voltage and current wave shapes are given by

$$e = 300 \sin\left(350.14t + \frac{\pi}{12}\right)$$

$$e = 300 \sin (350.14t + 15°)$$

Copyrighted material
Downloaded From : www.EasyEngineering.net

Downloaded From : www.EasyEngineering.net

$$= 300 \sin (2\pi \times 60t + 15°)$$

$$i = 30 \sin (350.14t) = 30 [\sin (2\pi \times 60t)]$$

Phase difference between voltage and current wave shapes

$\Rightarrow \quad (350.14t + 15°) - (350.14t) = 15°$

Hence, voltage wave shape leads the current by 15°.

The frequency of the wave shape,

$$\phi = 60 \text{ Hz}$$

(*ii*) $e = E_{max} \sin (\omega t + 60°)$

$$= E_{max} \sin \left(2\pi \times \frac{\omega}{2\pi} t + 60°\right)$$

$$i = I_{max} \sin \omega t = I_{max} \sin \left(2\pi \times \frac{\omega}{2\pi} t\right)$$

Phase difference between the voltage and current wave shapes

$$= (\omega t + 60°) - \omega t$$

$$= 60°$$

Thus, voltage leads current by an angle of 60°.

(*iii*) $e = E_{max} \sin (\omega t + \alpha) = E_{max} \sin \left(2\pi \times \frac{\omega}{2\pi} t + \alpha\right)$

$$i = \frac{E_{max}}{\sqrt{R^2 + x^2}} \sin \left(\omega t - \tan^{-1} \frac{x}{R}\right)$$

$$= \frac{E_{max}}{\sqrt{R^2 + x^2}} \sin \left(2\pi \times \frac{\omega}{2\pi} t - \tan^{-1} \frac{x}{R}\right)$$

Phase difference between current and voltage wave shapes is

$$= \left(\omega t - \tan^{-1} \frac{x}{R}\right) - (\omega t + \alpha)$$

$$= -\tan^{-1} \frac{x}{R} - \alpha = -\left(\tan^{-1} \frac{x}{R} + \alpha\right)$$

Hence, current wave lags the voltage wave shape by an angle

$$\left(\tan^{-1} \frac{x}{R} + \alpha\right)$$

Frequency of the wave shapes,

$$f = \frac{w}{2\pi}.$$

Material com direitos autorais
Downloaded From : www.EasyEngineering.net

Downloaded From : www.EasyEngineering.net

EXERCISES

1. Derive an expression for instantaneous value of alternating current in terms of its maximum value, angular velocity and time.
2. Explain the method of calculating rms value for the non- sinusoidal and sinusoidal alternating quantity.
3. Why are the root mean square values of an alternating quantities more important than their average values?
4. Explain the terms frequency, cycle and periodic time in connection with ac circuits.
5. Derive an expression for the rms value of the half wave rectified alternating current in terms of its maximum value.
6. What is average value of sine wave over a complete cycle? Justify your answer.
7. Define the root mean square value of an alternating current. Explain why this value is more generally employed in ac measurement than either the average or peak value.
8. An alternating current is represented by the following equation,

$$i = 50 \sin (100\pi t)$$

How long will it take the current to attain values of 10, 20, 30, 40, 50 amps?

9. Draw the following alternative waves extending over one period

(*i*) $e_1 = 150 \cos\left(\frac{\omega t - \pi}{6}\right)$, (*ii*) $e_2 = 150 \cos\left(\frac{\omega t - \pi}{3}\right)$,

(*iii*) $e_3 = 100 \sin 2\omega t$.

10. The current wave is represented by the equation $i = 50 \sin (100\pi t)$. Calculate the maximum and rms values of the current and its frequency.
11. The voltages of a three-phase, 50 Hz supply are given by the following expressions,

Phase R; $e_R = 100 \sin \pi t$, Phase Y; $e_y = 100 \sin\left(\frac{\omega t - 2\pi}{3}\right)$ Phase B; $e_B = 100 \sin\left(\frac{\omega t + 2\pi}{3}\right)$.

Find the instantaneous values of e_R, e_y, e_B at the following instants after e_R passes through zero in positive direction.

12. Three voltages represented by the following equations,

$e_1 = 10 \sin \omega t$, $e_2 = 5 \sin\left(\frac{\omega t + \pi}{6}\right)$, $e_3 = 10 \cos \omega t$ act together in an ac circuit. Represent these voltages by phasor and calculate an expression for the resultant voltage. Check the result so obtained graphically.

13. An alternating current flowing through a circuit has maximum value of 150 A and lags the applied voltage by 60°.The maximum value of voltage is 250 V. Both current and voltage wave shapes in their correct relationship for one complete cycle. What is the value of current when the voltage is at its maximum value?
14. Three alternating currents expressed by, $i_1 = 10 \sin\omega t$, $i_2 = 20 \sin\left(\frac{\omega t - \pi}{4}\right)$, $i_3 = 30 \sin\left(\frac{\omega t + \pi}{4}\right)$ act together in an ac circuit. Represent these voltages by Phasor and calculate an expression for the resultant voltage. Check the result so obtained graphically.

Material com direitos autorais
Downloaded From : www.EasyEngineering.net

Downloaded From : www.EasyEngineering.net

6

Single Phase AC Series Circuits

Introduction

In case of dc supply applied voltage and current flowing are constant with respect to time. Solution of the circuit can be found simply by applying Ohm's Law as following:

Current, $$I = \frac{\text{Applied voltage}}{\text{Resistance offered by the circuit}}$$

While in case of ac circuits voltage applied to the circuit and the current flowing through it changes from instant to instant. Thus the above simple relationship will not hold good in these circuits. The variation of current with respect to time current with respect to time sets up magnetic effect and variation of e.m.f. sets up electrostatic effect. Magnetic effects will be appreciably large with low voltage, heavy current circuits. Electrostatic effects are usually appreciable with high voltage circuits.

Resistive Circuit Only

Fig. 1 shows a circuit consisting only a pure resistance R which is connected to which an alternating voltage source and can be given by

$$v = V_{max} \sin \omega t$$

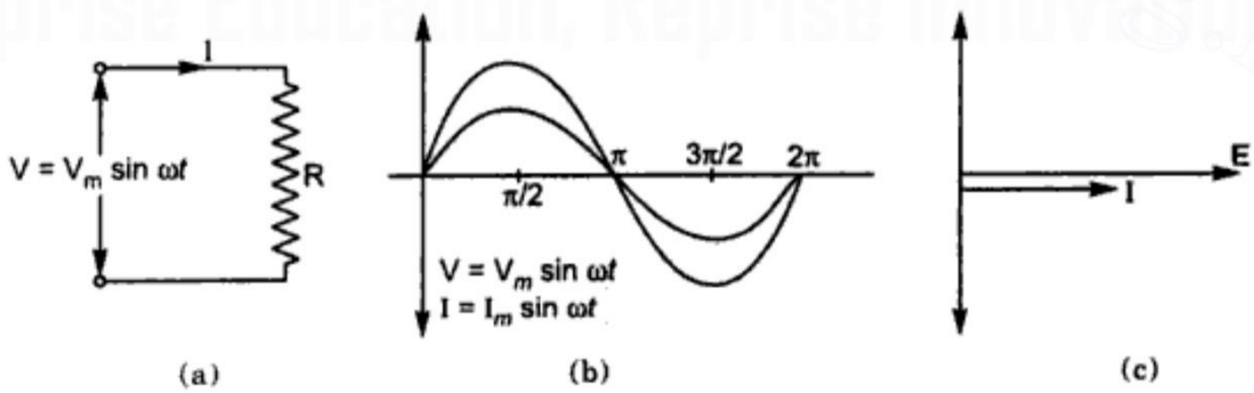

Fig. 1. *(a) Circuit diagram (b) Wave form (c) Phasor diagram.*

By Ohm's law the instantaneous value of current in the circuit will be

$$i = \frac{V}{R} = \left(\frac{V_m}{R}\right) \sin \omega t$$

$$i = I_m \sin \omega t$$

Material com direitos autorais
Downloaded From : www.EasyEngineering.net

Downloaded From : www.EasyEngineering.net

where, $I_m = \frac{V_m}{R}$

Comparison of the voltage and current equation shows that applied voltage and current are in phase and follow the sine law. Fig. 1 (*b*) and (*c*) shows the wave form and phasor diagrams of the voltage and current respectively in a circuit containing only a resistance.

Power in Resistive Circuit

Power drawn by the circuit at any instant is product of instantaneous voltage and instantaneous current *i.e.*

$$P = v.i = (V_m \sin \omega t)(I_m \sin \omega t)$$
$$= V_m I_m \sin^2 \omega t$$
$$= \frac{V_m . I_m}{2}(1 - \cos 2\omega t)$$
$$= \frac{V_m I_m}{2} - \frac{V_m I_m}{2}(\cos 2\omega t)$$

The above expression consists of a constant part of value $\frac{V_m I_m}{2}$ and fluctuating part $\frac{(V_m I_m \cos 2\omega t)}{2}$. The frequency of the fluctuating power is twice the applied voltage frequency and its average value over one complete cycle is zero.

Hence average power in this circuit is

$$P = \frac{V_m I_m}{2} = \left(\frac{V_m}{\sqrt{2}}\right).\left(\frac{I_m}{\sqrt{2}}\right) = V \cdot I \text{ watts.}$$

Thus the power is a purely resistive circuit is equal the product of the rms values of voltage and current.

A.C. Circuits Containing Inductance Only

An ac circuit having purely inductive circuit containing only an inductance L Henry. A sinusoidal alternative voltage is applied to this circuit as a result of which alternating currents flows in the circuit. This current produces a self-induced e.m.f. e_L in the circuit given by

$$e_L = \frac{-L di}{dt}$$

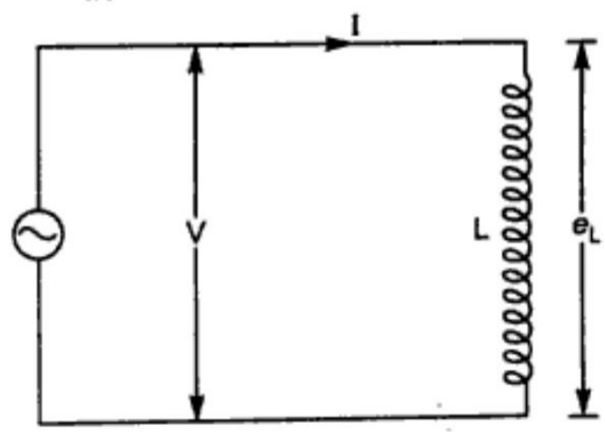

Fig. 2. *Circuit diagram.*

Material com direitos autorais
Downloaded From : www.EasyEngineering.net

Downloaded From : www.EasyEngineering.net

By KVL in circuit,

$$v + e_L = 0$$

$$v - L\frac{di}{dt} = 0$$

$$v = \frac{Ldi}{dt}$$

Let, $$v = V_{max}.\omega t$$

So $$V_{max}.\omega t = \frac{Ldi}{dt}$$

or $$di = \frac{1}{L}(V_{max}.\sin\omega t.dt)$$

Integrating both side of the equation,

$$i = \int\left(\frac{V_{max}}{L}\right).\sin\omega t.dt = \left(\frac{-V_{max}\cos\omega t}{\omega_L}\right)$$

$$i = \frac{V_{max}}{\omega L}.\sin\left(\frac{\omega_t - \pi}{2}\right)$$

$$i = i_{max}\sin\left(\frac{\omega t - \pi}{2}\right)$$

where, $$i_{max} = \frac{V_{max}}{\omega L}$$

So it is observed that the current attains its maximum value when $\sin(\omega t - \pi/2)$ becomes unity, *i.e.* the current lags behind the applied voltage by an angle $\frac{\pi}{2}$ or 90°. Hence in a purely inductive circuit the current flowing in the circuit lags the voltage applied to the circuit by an angle of 90°.

The quantity ωL is called inductive reactance and it is denoted by x_L

$$X_L = \omega L = \frac{V_{max}}{I_{max}} = \frac{V.\sqrt{2}}{I.\sqrt{2}} = \frac{V}{I} \text{ ohm}$$

$$X_L = \frac{V}{I} \text{ ohm } V = I.X_L$$

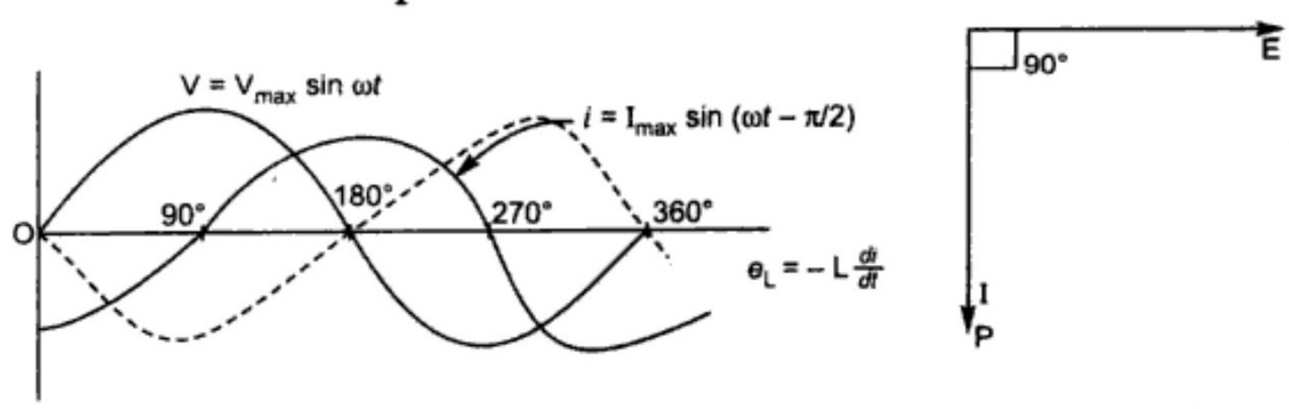

Fig. 3. *Phasor diagram and its waveform.*

Material com direitos autorais
Downloaded From : www.EasyEngineering.net

Downloaded From : www.EasyEngineering.net

$$I_{max} = \frac{V_{max}}{X_C}$$

Since $$X_C = \frac{I}{\omega C}$$

where X_C is called capacitive reactance, its unit is ohm. Comparing voltage and current equation it is found that current leads the voltage by an angle 90° or $\frac{\pi}{2}$.

Power in Purely Capacitance Circuit

Instantaneous power is an ac circuit is given by

$$P = v.i$$

$$= V_{max} \sin \omega t . I_{max} \sin \left(\frac{\omega t + \pi}{2}\right)$$

$$= V_{max} I_{max} \sin \omega t \, . \cos \omega t.$$

$$= \left(\frac{V_{max} I_{max}}{2}\right) (2 \sin \omega t \cos \omega t)$$

$$P = V \cdot I \sin 2\omega t.$$

Average power for one complete cycle

$$P = V \cdot I \text{ Average of } (\sin 2\omega t) = 0$$

Thus, the total power consumed by a purely capacitive circuit is zero.

Series Resistive and Inductive Circuit

A coil can be represented by its resistance and inductance connected in series.

Let, R = Resistance in Ohms.

L = Inductance in Henry

V = Applied voltage

I = RMS current flowing in circuit

V_R = Voltage drop across resistance

V_L = Voltage drop across inductance

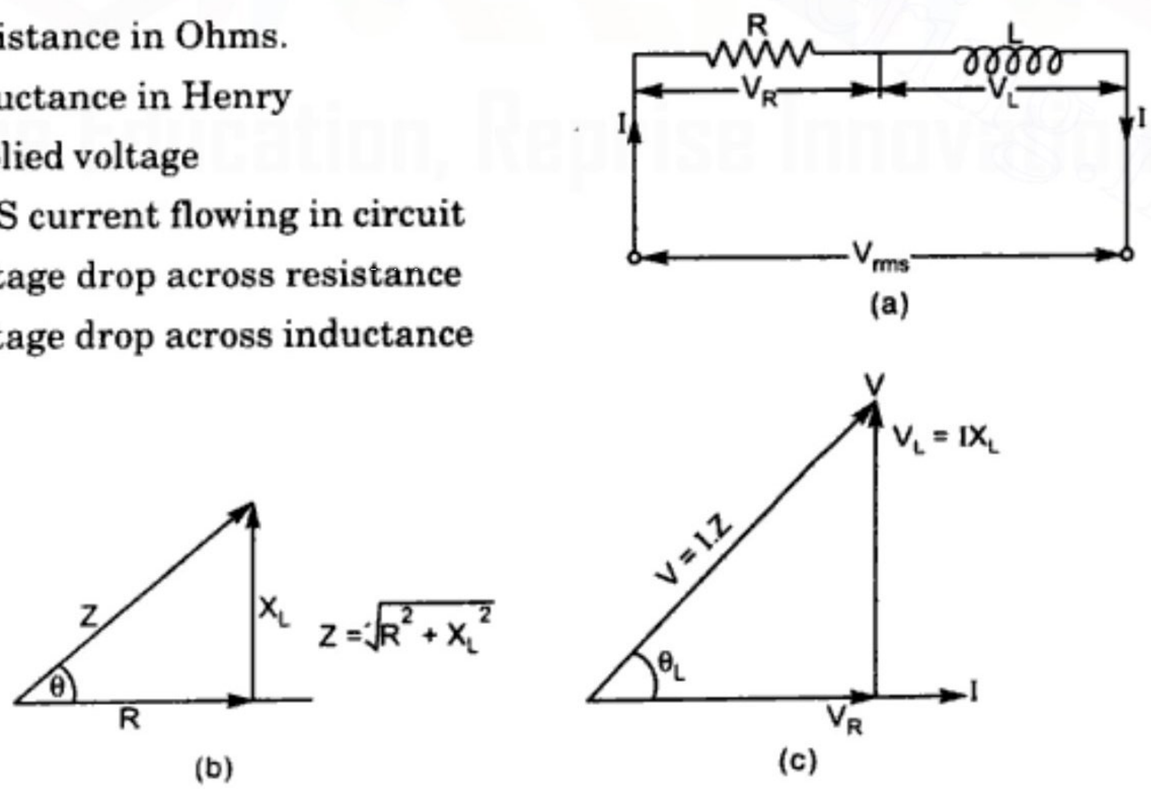

Fig. 5. *(a) Circuit, (b) Phasor diagram.*

Urheberrechtlich geschütztes Material
Downloaded From : www.EasyEngineering.net

Downloaded From : www.EasyEngineering.net

Since two components of the circuit are connected in series so that the same current will flow in both of them and current is used as reference phasor. The voltage V_R is in phase with the current and V_L leads by $\frac{\pi}{2}$ or 90°. The voltage V is the phasor sum of V_R and V_L

$$V = V_R + V_L$$

Applied voltage,
$$V = \sqrt{\left(V_R^2 + V_L^2\right)}$$
$$= \sqrt{\left[(I.R)^2 + (I.X_L)^2\right]} = I^2 \sqrt{\left(R^2 + X_L^2\right)}$$

So, current flowing through the circuit

$$I = \frac{V}{Z} \approx \frac{V}{\sqrt{R^2 + X_L^2}}$$

$Z = \sqrt{\left(R^2 + X_L^2\right)}$ is usually called impedance of circuit and is denoted by symbol Z, its unit is Ohms.

or
$$I = \frac{V}{Z}$$

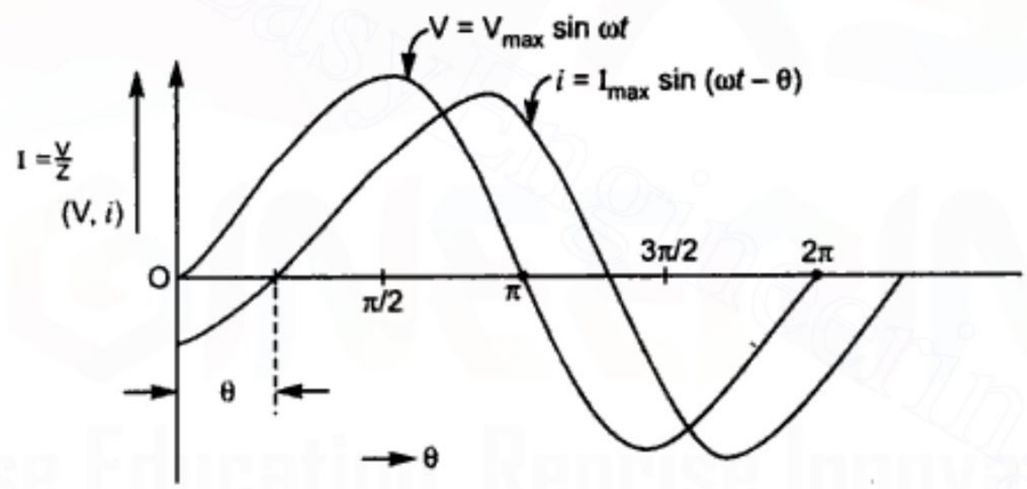

Fig. 6. *Wave shapes of R-L series circuit.*

From the above waveform we have

$$\tan \Phi = \frac{V_L}{V_R} = \frac{IX_L}{IR} = \frac{X_L}{R}$$

or,
$$\Phi = \tan^{-1}\left(\frac{X_L}{R}\right)$$

$$\cos \Phi = \cos \left\{\tan^{-1}\left(\frac{X_L}{R}\right)\right\}$$

Power in Series R-L Circuit

Active Power : Instantaneous Power drawn by ac circuit is equal to the product of instantaneous value of voltages and currents.

Urheberrechtlich geschütztes Material
Downloaded From : www.EasyEngineering.net

Downloaded From : www.EasyEngineering.net

Instantaneous Power = $v.i$

where v = instantaneous value of voltage = $V_{max}.\sin \omega t$

i = instantaneous value of current = $I_{max}.\sin(\omega t - \varnothing)$

$$P = V_{max} \sin \omega t \, I_{max} \sin(\omega t - \varnothing)$$

$$= I_{max}.V_{max} \sin \omega t.\sin(\omega t - \varnothing)$$

$$= \left(\frac{I_{max}I_{max}}{2}\right)\{\cos \varnothing - \cos(2\omega t - \varnothing)\}$$

$$= \left(\frac{I_{max}I_{max}}{2}\right)\cos \varnothing - \left(\frac{I_{max}I_{max}}{2}\right).\cos(2\omega t - \varnothing)$$

The above equation consists of two terms:

1. $\left(\frac{I_{max}I_{max}}{2}\right)\cos \varnothing$, remains constant irrespective of time

2. $V_{max}.I_{max}\cos\frac{(2\omega t - \varnothing)}{2}$, Power varies at twice the supply frequency. So average value of Power over one complete cycle is zero. Hence it does not contribute to average value of power drawn from the supply.

So, average power over one cycle

$$P = \frac{1}{2}.V_{max}I_{max}.\cos \varnothing$$

$$= \left(\frac{V_{max}}{\sqrt{2}}\right)\left(\frac{I_{max}}{\sqrt{2}}\right)\cos \varnothing$$

$$P = VI\cos \varnothing$$

where, V and I are rms value of voltage and current.

$$\cos \varnothing = \text{Power factor}$$

Thus the average power drawn by circuit is find out by multiplying the rms value of voltage and current by cos $\varnothing$. Its units is watt.

Apparent Power or Volt Amperes

The product of rms values of voltages and current in ac circuit is called volt-amperes. It is also known as apparent power and denoted by S; which is measured in volt-amperes (VA) or kilo volt-amperes (KVA)

$$S = V.I \text{ volt-amperes}$$

Reactive Power

In ac circuits, current lags or leads the applied voltage by an angle $\varnothing$. thus the current can be resolved into active and reactive components. The reactive component of circuit is equal to I sin $\varnothing$. Therefore power drawn of reactive component of current is called reactive power.

Hence, reactive power = VI sin $\varnothing$

It is expressed in Var or KVAR or MVAR

Urheberrechtlich geschütztes Material
Downloaded From : www.EasyEngineering.net

Downloaded From : www.EasyEngineering.net

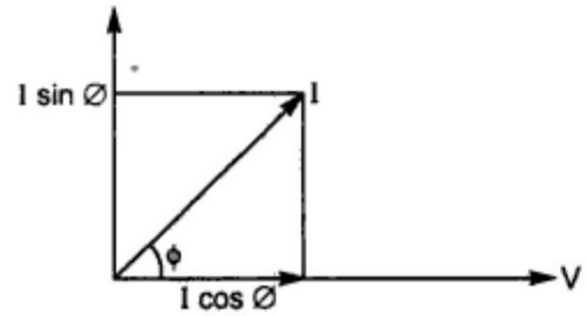

Fig. 7. *Phasor diagram for power.*

Circuit Containing Resistor and Capacitor

Figure shows an Ac circuit containing resistance and capacitance in series and connected to a sin gle phase AC supply of frequency *f*, Hertz.

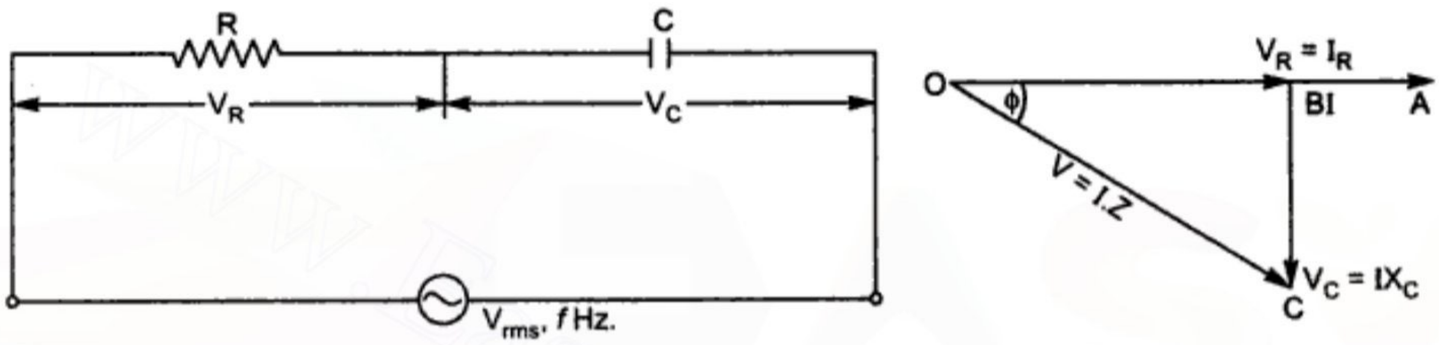

Fig. 8. *Diagram for R-C series circuit and its phasor.*

Let,

V is the rms value of voltage applied to the circuit.

I is the rms value of current flowing in the circuit.

V_R, voltage drop across resistance = I.R

V_c voltage drop across capacitance = $I.X_C$

The phasor diagram for circuit can be drawn by taking the current as reference (OA). The voltage drop V_R across the resistance is in phase with current (OB). The voltage across the capacitance V_C lags the current by 90°(BC). The OC is the phasor sum of the two voltages V_R and V_C hence; the phasor OC represents the applied voltage. Thus, in a capacitive circuit current leads the voltage by angle Ø.

Therefore applied voltage is given by

$$V = \sqrt{\left(V_R^2 + V_C^2\right)}$$

$$V = \sqrt{\left\{(IR)^2 + (-IX_C)^2\right\}}$$

$$V = I\sqrt{\left(R^2 + X_C^2\right)}$$

$$\frac{V}{I} = \sqrt{\left(R^2 + X_C^2\right)}$$

or

$$I = \frac{V}{\sqrt{R^2 + X_C^2}} = \frac{V}{Z},$$

Urheberrechtlich geschütztes Material
Downloaded From : www.EasyEngineering.net

Downloaded From : www.EasyEngineering.net

$$Z = \sqrt{R^2 + X_C^2}\text{; is the impedance of the circuit.}$$

Also,Current flowing through the circuit leads the voltage by an angle ∅ which is given by

$$\varnothing = \tan^{-1}\left(\frac{V_c}{V_r}\right) = \tan^{-1}\left(\frac{I.X_c}{I.R}\right)$$

$$= \tan^{-1}\left(\frac{X_c}{R}\right)$$

$$\tan \varnothing = \frac{X_c}{R}$$

and,

$$\sin \varnothing = \frac{X_c}{Z}$$

Power factor of the circuit

$$\cos \varnothing = \frac{R}{Z} = \frac{R}{\sqrt{(R^2 + X_C^2)}}$$

Circuit Containing Resistance, Inductance and Capacitance in Series

A circuit having R, L and C in series is called R–L–C series circuit shown in figure. An ac supply of frequency *f*, Hertz is applied to this circuit. sin ce current is common to all the elements of circuit, so used as reference phasor.

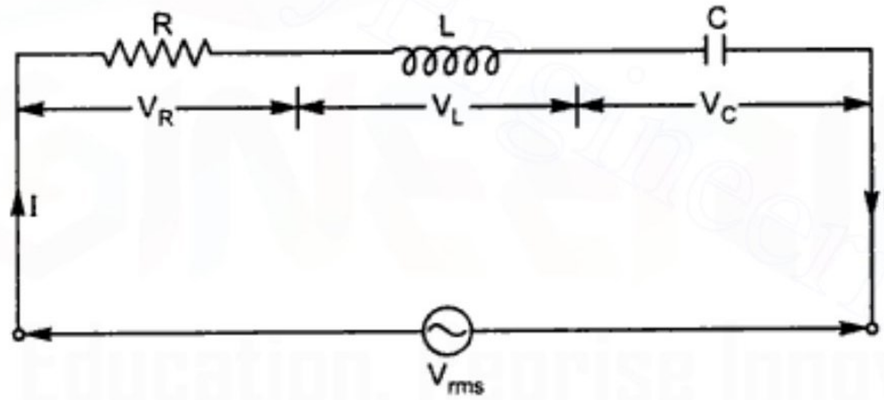

Fig. 9. *Series R-L-C circuit.*

Let V be the rms value of the voltage applied to the circuit.
V_R, the rms value of voltage across the resistance R.
V_L, the rms value of the voltage across the inductance L.
V_C, the rms value of the voltage across the capacitance C.
I, the rms value of current flowing through the circuit.

The current phasor is represented by OA. The voltage drop V_R across the resistance R is in phase with the current and is represented by OB. The voltage V_L across the inductance L leads *t* he current phasor by 90°(BC). The voltage VC across the capacitance lags the current by 90° and is shown by BD. Phasor BC and BD are in direct opposition and hence their resultant is given by

$$BE = (BC - BD); \text{(Assuming BC to be greater than BD)}$$

$$BE = (BD - BC); \text{(Assuming BD to be greater than BC)}$$

Urheberrechtlich geschütztes Material
Downloaded From : www.EasyEngineering.net

Downloaded From : www.EasyEngineering.net

Hence the applied voltage will be the phasor sum of the phasors OB and BE. Referring to the following figure.

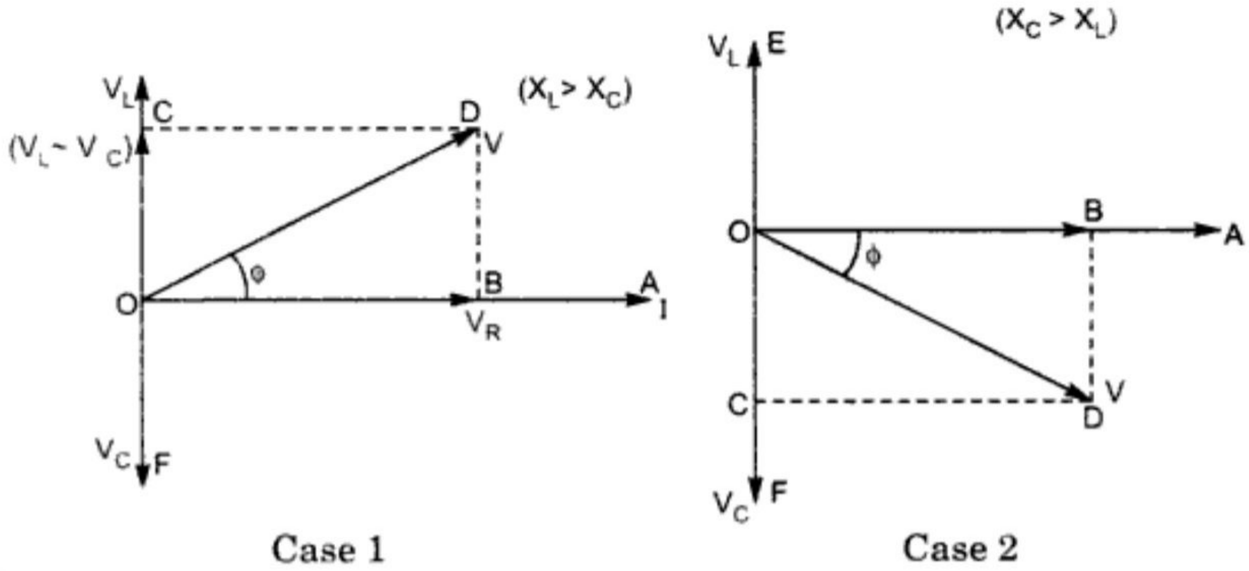

Fig. 10. *Phasor diagram for R-L-C series circuit case 1 and case 2.*

Case 1: From the phasor diagram drawn above,

$$OD = \sqrt{\left\{(OB)^2 + (OC)^2\right\}}$$

$$V = \sqrt{\left\{(OB)^2 + (OE - OF)^2\right\}}$$

$$V = \sqrt{\left(V_R^2 + (V_L - V_C)^2\right)}$$

$$V = \sqrt{\left\{(I.R)^2 + (I.X_L - I.X_L)^2\right\}}$$

$$V = I\sqrt{\left\{R^2 + (X_L - X_C)^2\right\}}$$

Or, current flowing in the series circuit is

$$I = \frac{V}{\sqrt{R^2 + (X_L - X_C)^2}} = \frac{V}{Z}$$

Case 2: From the above phasor diagram

$$OD = \sqrt{\left(OB^2 + OC^2\right)} = \sqrt{\left\{OB^2\,(OF - OE)^2\right\}}$$

$$V = \sqrt{\left\{V_R^2 + (V_C - I.X_L)^2\right\}}$$

$$= \sqrt{\left\{(IR)^2 + (I.X_C - I.X_L)^2\right\}} = I\sqrt{\left\{R^2 + (X_C - X_L)^2\right\}}$$

Or, current flowing in the series circuit is

$$I = \frac{V}{\sqrt{\left\{R^2 + (X_C - X_L)^2\right\}}}$$

Urheberrechtlich geschütztes Material
Downloaded From : www.EasyEngineering.net

Downloaded From : www.EasyEngineering.net

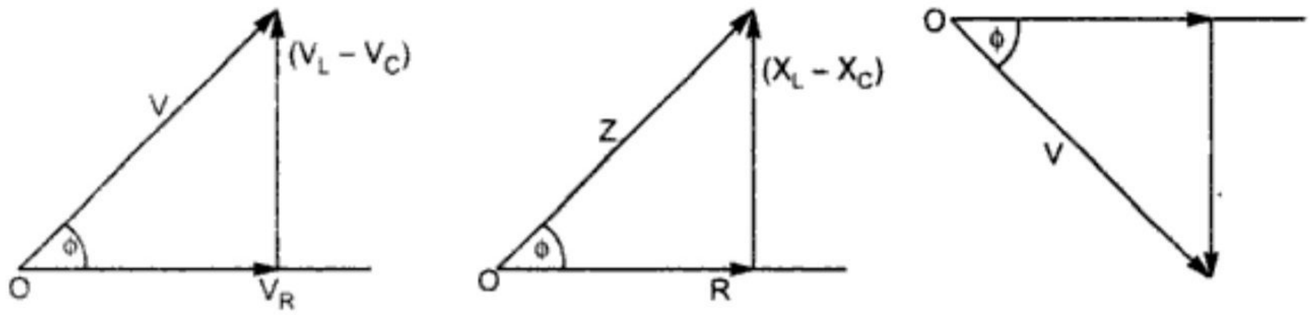

Fig. 11. *Triangle diagram for voltage and impedance.*

SOLVED NUMERICAL PROBLEMS

Example 1: *A series R-L circuit with R = 5 W and L = 10 mH is connected to 230 V, 50 Hz single phase supply. Calculate : (i) reactance ; (ii) impedance ; (iii) current drawn by the circuit ; and (iv) P.f. of the circuit.*

Solution :

$$R = 5\ W,\ L = 10\ mH,\ V = 230\ V,\ f = 50\ Hz$$
$$= 10 \times 10^{-3}\ H$$

(*i*) Reactance $X_L = 2\pi f l$

$$= 2 \times 3.14 \times 50 \times 10 \times 10^{-3}\ H$$
$$= 3.14\ W$$

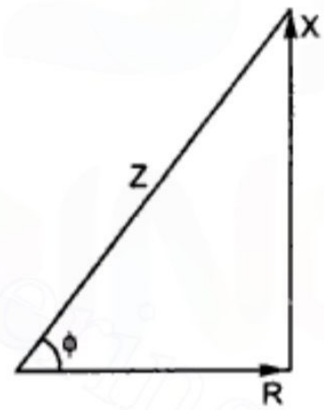

(*ii*) Impedance $Z = \sqrt{R^2 + X_L^2}$

$$= \sqrt{(5)^2 + (3.14)^2}$$
$$= 5.90\ W$$

(*iii*) Current drawn $I = \dfrac{V}{Z} = \dfrac{230}{5.90} = 38.98$ amp.

(*iv*) Power factor $\cos\phi = \dfrac{R}{Z} = \dfrac{5}{5.90}$

$$\cos\phi = 0.85$$

Example 2 : *A series R-C circuit has R = 5 W and C = 100 mF is connected to 230 V, 50 Hz single phase supply. Calculate (ii) impedance ; (i) reactance ; (iii) current drawn by circuit ; (iv) power factor.*

Solution : R = 5 W, C = 100 mF, V = 230 V, f = 50 Hz

(*i*) Reactance $X_C = \dfrac{1}{WC} = \dfrac{1}{2\pi fc} = \dfrac{1}{2 \times 3.14 \times 50 \times 100 \times 10^{-6}}$

$$X_C = 31.85\ W$$

(*ii*) Impedance $Z = \sqrt{R^2 + X_L^2}$

$$= \sqrt{(5)^2 + (31.85)^2}$$

Urheberrechtlich geschütztes Material
Downloaded From : www.EasyEngineering.net

Downloaded From : www.EasyEngineering.net

$$Z = 32.24 \text{ W}$$

(*iii*) Current $$I = \frac{V}{Z}$$

$$= \frac{230}{32.24} = 7.13 \text{ amp.}$$

(*iv*) Power factor $$\cos\phi = \frac{R}{Z} = \frac{5}{32.24}$$

$$Pf = \cos\phi = 0.155 \text{ (reading)}$$

Example 3: *A series R-L-C circuit is connected to a 230 V, 50 Hz single phase a.c. supply. The value of R = 6 W, L = 15 mH and C = 125 mF. Find (i) total reactance (ii) impedance ; (iii) current drawn by the circuit ; (iv) P.f. of the circuit.*

Solution : (*i*) Total reactance

$$X_L = W_L = 2 \times 3.14 \times 50 \times 15 \times 10^{-3}$$

$$X_L = 4.71 \text{ W}$$

$$X_C = \frac{1}{WC} = \frac{1}{2 \times 3.14 \times 50 \times 125 \times 10^{-6}}$$

$$X_C = 25.48 \text{ W}$$

Since $X_C > X_L$, so the circuit is capacitive

$$X = X_L - X_L = 25.48 - 4.71$$

$$X = 20.77 \text{ W}$$

(*ii*) Impedance $$Z = \sqrt{R^2 + X^2}$$

$$= \sqrt{(6)^2 + (20.77)^2}$$

$$Z = 21.62 \text{ W}$$

(*iii*) Current drawn $$I = \frac{230}{21.62}$$

$$I = 10.64 \text{ Amp.}$$

(*iv*) Power factor $$\cos\phi = \frac{R}{Z}$$

$$= \frac{6}{21.62}$$

$$\text{P.f.} = \cos\phi = 0.28 \text{ (leading)}$$

Example 4 : *A capacitor of 100 mF is connected across a 200 V, 50 Hz single phase supply calculate (i) the reactance of the capacitor ; (ii) rms value of current and (iii) the maximum current.*

Solution : $$C = 100 \text{ mF} = 100 \times 10^{-6} \text{ F}$$

$$V = 200 \text{ V}, \phi = 50 \text{ Hz}$$

Urheberrechtlich geschütztes Material
Downloaded From : www.EasyEngineering.net

Downloaded From : www.EasyEngineering.net

(*i*) Reactance $$X_C = \frac{1}{WC} = \frac{1}{2\pi fc}$$

$$= \frac{1}{2 \times 3.14 \times 50 \times 100 \times 10^{-6}} = 31.85 \text{ W}$$

(*ii*) Rms value of applied voltage = 200 V

Rms value of current drawn :

$$I_{rms} = \frac{V}{X_C} = \frac{200}{31.85} = 6.28 \text{ amp.}$$

(*iii*) Maximum Current

$$I_{max} = \sqrt{2}\ I_{rms} = \sqrt{2} \times 6.28 = 8.88 \text{ amp.}$$

Example 5: *A non-inductive lond takes 20 A at 200 V. Calculate the inductance of the reactor to be connected in series in order that some current be supplied from 240 V, 50 Hz supply. Also determine the phase angle between the 230 V supply and the current. Neglect the resistance of reactor.*

Solution : Voltage applied to non-inductive lond = 200 V

Current flowing through the lond = 20 A

Resistance of non inductive lond = $\frac{200}{20}$ = 10 ohm.

Now a reactor of inductance L is connected in series with the non-inductive resistance of 10 W.

Impedance of the circuit

$$= \sqrt{R^2 + X_L^2} = \sqrt{(10)^2 + (2\pi \times 50 \times L)^2}$$

Voltage applied to the circuit = 240 V

Current flowing in the circuit = 20 A

Impedance $$= \frac{V}{I}$$

or $$\sqrt{(10)^2 + (100\pi L)^2} = \frac{240}{20}$$

$$= 12$$

$$(10)^2 + (100\pi L)^2 = (12)^2$$

$$(100\pi L)^2 = (12)^2 - (10)^2$$

$$100\pi L = \sqrt{44}$$

$$L = \frac{6.63}{100\pi}$$

$$L = 0.021 \text{ H.}$$

Phase angle between applied voltage and current

Material com direitos autorais
Downloaded From : www.EasyEngineering.net

Downloaded From : www.EasyEngineering.net

$$\phi = \tan^{-1}\left(\frac{X_L}{R}\right) = \tan^{-1}\left(\frac{6.63}{10}\right)$$

$$\phi = 33.54°$$

Example 6: *A capacitor of 25 mF is connected in series with a variable resistor. The circuit is connected across a 50 Hz mains. Find the value of the resistor for a particular condition when the voltage across the capacitor is half the supply voltage.*

Solution : $C = 25 \text{ mF} = 25 \times 10^{-6} \text{ F}, f = 50 \text{ Hz}$

Capacitive reactance $X_C = \dfrac{1}{2\pi fc}$

$$= \frac{1}{2 \times 3.14 \times 50 \times 25 \times 10^{-6}} = 127 \text{ W}$$

Let the resistance of the variable resistor for the condition mentioned be R ohms.

Impedance $Z = \sqrt{R^2 + X_C^2}$

$$Z = \sqrt{(R)^2 + (127)^2}$$

Let the current drawn be I Amp.

$$V = I.Z = I\sqrt{R^2 + (127)^2}$$

Voltage across the capacitor

$$V = I \,.\, X_C = I \,.\, (127)$$

As per given condition,

voltage across the capacitor $= \dfrac{1}{2}$ (Voltage applied)

$$I \,.\, X_C = \frac{1}{2}(I \,.\, Z)$$

$$I(127) = \frac{1}{2}\left(I \,.\, \sqrt{R^2 + (127)^2}\right)$$

$$254 = \sqrt{R^2 + (127)^2}$$

$$R^2 = (254)^2 - (127)^2$$

$$R = \sqrt{(254)^2 - (127)^2}$$

$$R = 219 \text{ W.}$$

Example 7: *A two element seriess circuit is connected across an a.c. source $V = 100\sqrt{2}\sin(314t + 25°)$ V. The current in the circuit then is found to be $i = 10\sqrt{2}\sin(314t + 45°)$ amp. Determine the parameters of circuit.*

Solution : $V = 100\sqrt{2}\sin(314t + 25°)$ V

$$i = 10.\sqrt{2}\sin(314t + 45°) \text{ A}$$

Material com direitos autorais
Downloaded From : www.EasyEngineering.net

Downloaded From : www.EasyEngineering.net

Phase angle between voltage and current (45 – 25°) = 20° *i.e.*, current leads

$$\text{P.f.} = \cos 20° = 0.94$$

Impedance $$Z = \frac{V}{i} = \frac{100}{10} = 10 \text{ W}$$

so, $$R = Z \cos \phi$$

$$R = 10 \cos 20° = 9.4 \text{ W}$$

$$X_C = Z \sin \phi$$

$$= 10 \,.\, \sin 20°$$

$$X_C = 3.42 \text{ W}$$

$$C = \frac{1}{2\pi f X_C} = \frac{1}{2 \times 3.14 \times 50 \times 3.42}$$

$$C = 9.31 \times 10^{-4} \text{ F}$$

$$C = 9.31 \text{ mF}.$$

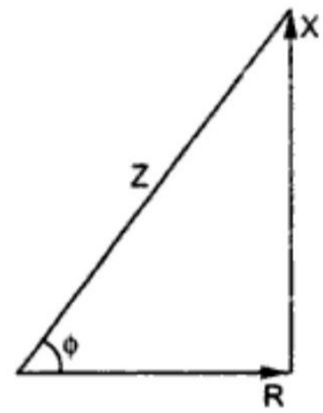

Example 8 : *Figure below shows that the resistance and reactance drops the terminal voltages V_1 and V_2 and the current. Find the valus of (i) the current I, (ii) V_1 and V_2 and (iii) P.f.*

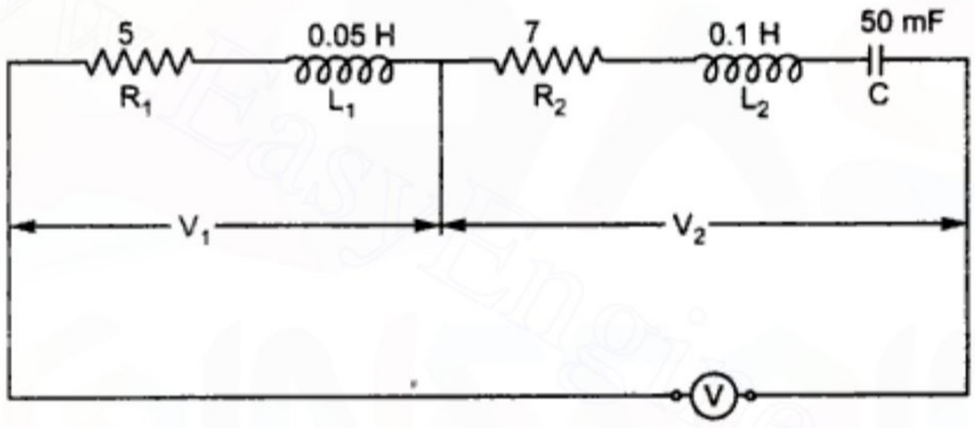

Solution : $$R = 5 + 7 = 12 \text{ W}$$

$$L = 0.05 + 0.1 = 0.15 \text{ H}$$

$$C = 50 \text{ mF} = 50 \times 10^{-6} \text{ F}$$

So, $$X_L = 2\pi f L$$

$$= 2 \times 3.14 \times 50 \times 0.15$$

$$= 47.1 \text{ H}$$

$$X_C = \frac{1}{2\pi f c} = \frac{1}{2 \times 3.14 \times 50 \times 50 \times 10^{-6}}$$

$$X_C = 63.70 \text{ W}$$

$$Z = \sqrt{R^2 + (X_L - X_C)^2} = \sqrt{(12)^2 + (47.1 - 63.70)^2}$$

$$Z = 20.48 \text{ W}$$

Since $X_C > X_L$ so circuit is capacitive in nature.

(*i*) Current $$I = \frac{V}{Z} = \frac{230}{20.48} = 11.23 \text{ Amp.}$$

Copyrighted material
Downloaded From : www.EasyEngineering.net

Downloaded From : www.EasyEngineering.net

(*ii*) Terminal voltages $V_1 = I \cdot Z_1 = 11.23 \cdot \sqrt{R_1^2 + X_{L_1}^2}$

$$= 11.23\sqrt{(5)^2 + (2\pi \times 50 \times 0.05)^2}$$

$$V_1 = 185.04 \text{ Volt}$$

$$V_2 = I \cdot Z_2$$

$$= 11.23\sqrt{R_2^2 + \left(X_{L_2} - X_C\right)^2}$$

$$= 11.23\sqrt{(7)^2 + \left(2\pi \times 50 \times 0.1 - \frac{1}{2\pi \times 50 \times 50 \times 10^{-6}}\right)}$$

$$V_2 = 11.23\sqrt{49 + (31.4 - 63.69)^2}$$

$$V_2 = 371 \text{ Volt}$$

(*iii*) P.f. of circuit $\cos\phi = \frac{R}{Z} = \frac{12}{20.48} = 0.586$

$$\text{P.f.} = \cos\phi = 0.586 \text{ (leading)}$$

Example 9: *Branch A of a parallel circuit of an inductive coil R = 50 W, L = 0.1 H and the branch B consists of a resistor of 45 W in series with a capacitor of 100 mF. Calculate the current, power and power factor of the circuit, when the supply voltage is 230 V at 50 Hz.*

Solution : (*i*) Inductive reactance of branch A,

$$X_A = 2\pi fl$$

$$= 2 \times 3.14 \times 50 \times 0.1$$

$$= 31.4 \text{ W}$$

Impedance of Branch A

$$Z_A = \sqrt{(50)^2 + (3.14)^2}$$

$$= 59.04 \text{ W}$$

Current in Branch A

$$I_A = \frac{V}{Z_A} = \frac{230}{59.04}$$

$$I_A = 3.9 \text{ amp.}$$

Phase angle $f_A = \tan^{-1}\left(\frac{31.4}{59.04}\right)$

$$f_A = 32.13°$$

Capacitive reactance of branch B, X_B

$$X_B = \frac{1}{2\pi fc}$$

Materiál chráněný autorskými právy
Downloaded From : www.EasyEngineering.net

Downloaded From : www.EasyEngineering.net

$$= \frac{1}{2\pi \times 50 \times 100 \times 10^{-6}} = 31.83 \text{ W}$$

Impedance $$Z_B = \sqrt{(45)^2 + (31.83)^2} = 55.12 \text{ W}$$

$$I_B = \frac{V}{Z_B} = \frac{230}{55.12} = 4.17 \text{ Amp.}$$

Angle of lead

$$f_B = \tan^{-1}\left(\frac{X}{R}\right)$$

$$= \tan^{-1}\left(\frac{31.83}{45}\right) = 35.27°.$$

(*ii*) Sum of active components of branch current

$$= I_A \cos \phi_A + I_B \cos \phi_B$$
$$= 3.9 \cos 32.14 + 4.17 \cos 35\ 27°$$
$$= 6.7 \text{ A}$$

Sum of reactive componetns of branch current

$$= - I_A \sin \phi_A + I_B \sin \phi_B$$
$$= - 3.9 \sin 32.14 + 4.17 \sin 35\ .\ 27°$$
$$= 0.33 \text{ A}$$

Total amount drawn by the parallel

$$\text{circuit I} = \sqrt{(6.7)^2 + (0.33)^2}$$
$$I = 6.71 \text{ A.}$$

(*iii*) Power factor of the current

$$\cos \phi = \frac{6.7}{6.71} = 0.998 \text{ (leading)}$$

(*iv*) Power taken by the parallel curernt

$$= VI \cos \phi = 230 \times 6.71 \times 0.998$$
$$= 1541 \text{ W.}$$

Example 10: *A resistance of 5 W and indcutance of 0.03 H are connected in parallel and fed from a since having V = 250 sin (314t + 50°). Determine (i), the total current (ii) the power factor, equivalent resistance and inductance of the circuit.*

Solution : $$R = 4W,\ L = 0.03 \text{ H},\ W = 3.14 \text{ rad./s}$$

$$X_L = WL$$
$$= 3.14 \times 0.03 = 9.42 \text{ W}$$

and $$Z_L = R + jX_L$$
$$= 5 + j9.42 = 10.66 \angle 6.204$$

$$Z_{eq} = \frac{R\,(j \times L)}{R \times j \times L}$$

Materiál chráněný autorskými právy
Downloaded From : www.EasyEngineering.net

Downloaded From : www.EasyEngineering.net

$$I_2 = VZ_2$$
$$= (230\angle 53.8)(0.054\angle 61.05)$$
$$= 12.42\angle 114.85$$
$$= (-5.2 + j11.27) \text{ amp.}$$

For Branch 1,

$$S_1 = VI_1$$
$$= (230\angle 53.8)(14.49\angle -3.03)$$
$$= 333.27\angle 50.77°$$
$$S_1 = 2107.72 + j2581$$
$$P_1 = 2107.72 \text{ W}$$
$$= 2.11 \text{ KW}$$
$$Q_1 = 2581 \text{ VA}$$
$$= 2.581 \text{ KVA}$$
$$S_1 = 3.33 \text{ KVA}$$

For Branch 2,

$$S_2 = VI_2$$
$$= (230\angle 53.8)(12.48\angle -114.85)$$
$$= 2870.4\angle -61.05$$
$$= 1389.41 - j2511.72$$
$$P_2 = 1389.41 \text{ W}$$
$$P_2 = 1.4 \text{ KW}$$
$$Q_2 = -2511.72 \text{ VA}$$
$$Q_2 = -2.5 \text{ KVA}$$
$$S_2 = 2.87 \text{ KVA}$$

Current drawn from source $I = I_1 + I_2$

$$I = (14.47 + j0.76) + (-5.2 + j11.27)$$
$$I = (9.27 + j12.03)$$
$$I = 15.19\angle 52.83$$

Current is lagging by an angle

$$= (53.80 - 52.83)$$
$$= 0.97°$$
$$\cos\phi = \cos(0.97°)$$
$$\cos\phi = 0.999$$

Example 12: *Two circuits having the same numerical ohmic impedance are joined in parallel. The power factor of one circuit is 0.8 and the other is 0.75. What is the power factor of the combination ?*

Solution : Let Z be impedance of each circuit

$$\cos\phi_1 = 0.8$$
$$Z_1 = Z\angle 36.86Z \qquad \phi_1 = 36.86°$$

Materiál chráněný autorskými právy
Downloaded From : www.EasyEngineering.net

Downloaded From : www.EasyEngineering.net

$$Z_1 = Z\,(0.8 + j0.6) \qquad \cos\phi_2 = 0.75$$
$$Z_2 = Z\,\angle 41.41^\circ \qquad \phi_2 = 41.41^\circ$$
$$Z_2 = Z\,(0.75 + j0.66)$$

Since $Z_1 \,||\, Z_2$

So,
$$Z = \frac{Z_1 . Z_2}{Z_1 + Z_2} = \frac{(Z\,\angle 36.86)(Z\,\angle 41.41)}{Z\,(0.8 + j0.6 + 0.75 + j0.66)}$$
$$= \frac{Z\,\angle 78.27}{(\angle 1.55 + j1267)} = \frac{Z\,\angle 78.27}{2\,\angle 39.26}$$
$$= \frac{Z}{2}\angle 39.01$$

Power factor of combination is

$$\cos\phi = \cos 39.01$$
$$\text{P.f.} = 0.777$$

EXERCISES

1. Define the term inductive reactance of a coil and explain its variation with frequency.
2. What is the phase angle between the applied voltage and the current in a purely inductive circuit? Justify your answer analytically.
3. Define the term capacitive reactance and explain its variation with frequency. Also derive an expression for the instantaneous current in a purely capacitive circuit, when a sin usoidal voltage given by $e = E_{max} \sin \omega t$ is applied to the circuit.
4. An inductor having a reactance of 15 Ω and negligible resistance is connected across a 240 V, 50 Hz sin gle phase supply. Find the current drawn by the coil. What will be the effect on the current drawn if (*i*) frequency is reduced to half and (*ii*) frequency is three time of fundamental? The supply voltage is kept constant.
5. A choke coil having a fixed resistance of 4 ohm and an inductive reactance of 15 ohm is connected in series with a variable resistor. A voltage of 230 V is applied to this circuit. For what value of variable resistor is the power consumed in it maximum? Also determine its value when the power consumed by the complete circuit is maximum.
6. An inductance of 50mH is connected in series with a resistance of 10 Ohm. The voltage applied to the circuit is 230 V, 50 Hz. Calculate (*i*) impedance, (*ii*) Current, (*iii*) power absorbed and (*iv*) power factor.
7. A choke coil having a resistance of 10 Ω and inductance of 0.05 H is connected in series with a resistance of 20 Ω, an inductance of 0.06 H and a capacitance of 100 μF. The final circuit is energized from 230 V, 50 Hz supply. Calculate (*i*) Current taken from the supply, (*ii*) Voltage across the choke coil (*iii*) Voltage across the remaining part of the circuit.
8. A coil having resistance of 15 Ω and inductance of 0.05 H is connected in series with a condenser of 100 μF. The whole circuit has been connected to 230 V, 50 Hz supply. Calculate (*i*) impedance,(*ii*) current,(*iii*) power factor and absorbed power.
9. A resistor of 15 Ω and capacitance of 0.05 μF is connected in series .The circuit has been connected to 230 V, 50 Hz supply. Calculate (*i*) impedance, (*ii*) current, (*iii*) power factor

เนื้อหาคุ้มครองลิขสิทธิ์
Downloaded From : www.EasyEngineering.net

Downloaded From : www.EasyEngineering.net

and absorbed power. Also draw the phasor diagram with proper scaling.

10. A series circuit consisting of resistance of 100 Ω, inductance 0.05 H and a capacitance of 50 μF is energized fro a 230 V, 50 Hz mains. Determine (*i*) impedance (*ii*) the current in the circuit,(*iii*)power factor ,(*iv*) the phase angle,(*v*) Voltage across the resistance and (*vi*) voltage across the capacitance.

11. A resistor and a capacitor are connected in series across a 230 V ac supply. The current taken by the circuit is 6 A when the frequency of supply is 50Hz. The current is reduced to 5 A when the frequency of the supply is decreased to 25 Hz. Determine (*i*) the value of resistor and (*ii*) the value of capacitor.

12. A coil having a resistance of 20 Ω and inductive reactance 25 Ω is connected in series with a capacitor of reactance 30 V.The circuit as a whole is connected across 230 V, 50 Hz supply. Determine (*i*) current drawn (*ii*) angle of phase difference between the applied voltage and the current,(*iii*) active component of current,(*iii*) reactive component of current,(*iv*) power factor of the circuit and (*v*) voltage across the coil.

Copyrighted material
Downloaded From : www.EasyEngineering.net

Downloaded From : www.EasyEngineering.net

7

Single Phase AC Parallel Circuit

Introduction

A parallel circuit consists of two or more branches connected in parallel. The voltage is same for each branch, but the current may differ in magnitude and phase depending upon the branch impedance. Each branch of the circuit is analyzed separately; the voltage is taken as the reference phasor. The magnitude and phase of each current is determined. The total current in the circuit is equal to the phasor sum of the branch current. Fig. 1 shows an AC circuit possessing resistance R Ω, inductance L Henry and capacitance C farad all are connected in parallel across a supply of V volts and f Hertz. Current flowing in the resistive, inductive and capacitive branches are respectively represented by I_R,I_L and I_C. The current taken by this circuit from the supply is the phasor sum of the branch currents *i.e.* the phasor sum of I_R,I_L and I_C.

Current through the resistive branch R, $I_R = \frac{V}{R}$ and is in phase with applied voltage.

Current through the inductive branch L, $I_L = \frac{V}{X_L} = \frac{V}{(2\pi fL)}$

This current is lagging behind the applied voltage by 90°.

Current through the capacitive branch C, $I_C = \frac{V}{X_C} = 2\pi fCV$ ampere.

The current in the capacitive branch leads the applied voltage by 90°.

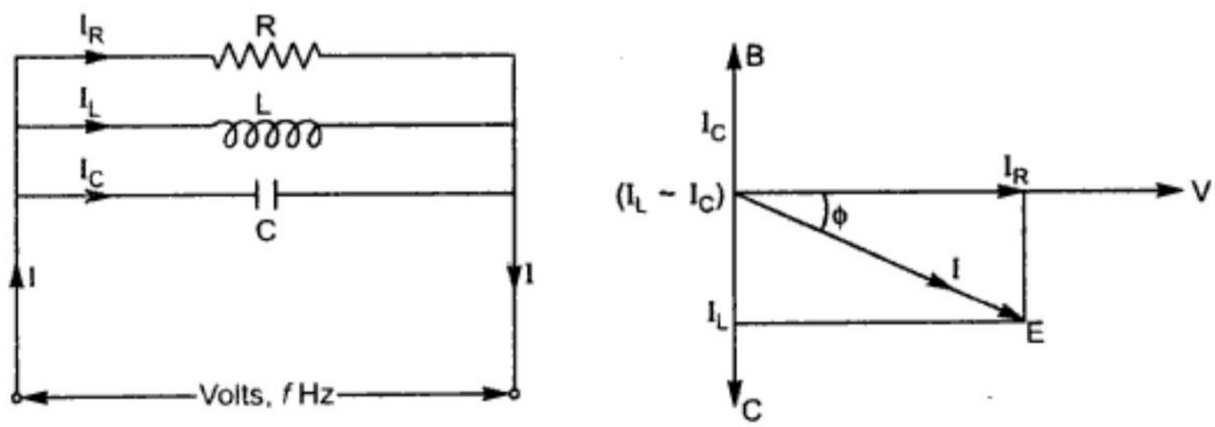

Fig. 1. *Fundamental parallel circuit and its phasor representation.*

Copyrighted material
Downloaded From : www.EasyEngineering.net

Downloaded From : www.EasyEngineering.net

In parallel circuits, voltage across the various branches of the circuit is the same and as such the applied voltage should be taken as reference phasor to draw the phasor diagram of parallel circuits. The phasor diagram of this circuit with applied voltage as reference phasor is shown in Fig. 1. Current in the inductive branch has been taken greater than that of the current in the capacitive branch.

Thus, the resultant of I_L and I_C is $(I_L - I_C)$.

Current drawn from the supply,

$$I = \text{Phasor sum of } I_R \text{ and } (I_L - I_C)$$

$$= \sqrt{\left\{I_R^2 + (I_L - I_C)^2\right\}}$$

The phasor difference between the applied voltage and the resultant current I is

$$\varnothing = \tan^{-1} \frac{(I_L - I_C)}{I_R}$$

$$\tan \varnothing = \frac{(I_L - I_C)}{I_R}$$

The resultant current lags the applied voltage, if $\tan\varnothing$ is negative and leads when it is positive. The above circuit is basic one and its solution is quite simple. However parallel circuit may consist of a large number of branches connected in parallel and each branch might be consisting of more than one element connected in series.

Methods to Solve Parallel Circuits

When a number of series circuits are connected in parallel across an ac supply, the total current taken by the circuit as a whole is the phasor sum of the currents drawn by various branches of the circuit. The total current in such cases can be calculated by either of three methods. (1) Phasor diagram method (2) Admittance method (3) Symbolic method.

Phasor Diagram Method : A parallel circuit consisting of two branches has been shown in Fig. 2. Branch A consists of a resistance and inductance in series, branch B consist of a resistance and capacitance in series. Let the current be I_A and I_B in the branches A and B respectively. The total current I drawn by the circuit is phasor sum of I_A and I_B.

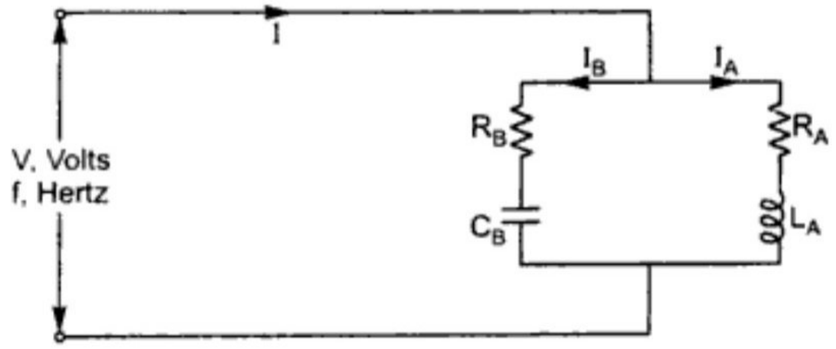

Fig. 2. *Parallel circuit with capacitive and inductive branch.*

Branch A

Voltage across branch A = V, volts

Copyrighted material
Downloaded From : www.EasyEngineering.net

Downloaded From : www.EasyEngineering.net

Impedance of branch A, $Z_A = \sqrt{\{(R_A)^2 + (X_{LA})^2\}}$

Thus current taken by branch A, $I_A = \dfrac{V}{Z_A}$

$$= \frac{V}{\left\{\sqrt{R_A^2 + X_{LA}^2}\right\}}$$

Phase difference of this current with respect to the applied voltage is given by

$$\varnothing_A = \tan^{-1}\left(\frac{X_{LA}}{R_A}\right)$$

This current will lag the applied voltage by an angle $\varnothing$ A.

Branch B

Branch B is a capacitive branch and thus the current I_B will lead the applied voltage

Impedance of branch B, $Z_B = \sqrt{\{R_B^2 + X_{CB}{}^2\}}$

Current drawn by branch B, $I_B = \dfrac{V}{Z_B} = \dfrac{V}{\left\{\sqrt{R_B^2 + X_{CB}^2}\right\}}$

The branch current, I_B leads the applied voltage V by an angle $\varnothing_B$ given by

$$\varnothing_B = \tan^{-1}\left(\frac{X_{CB}}{R_B}\right)$$

Now, we can drawn the phasor diagram for above currents and phase angle with voltage as reference vector or phasor (OC).

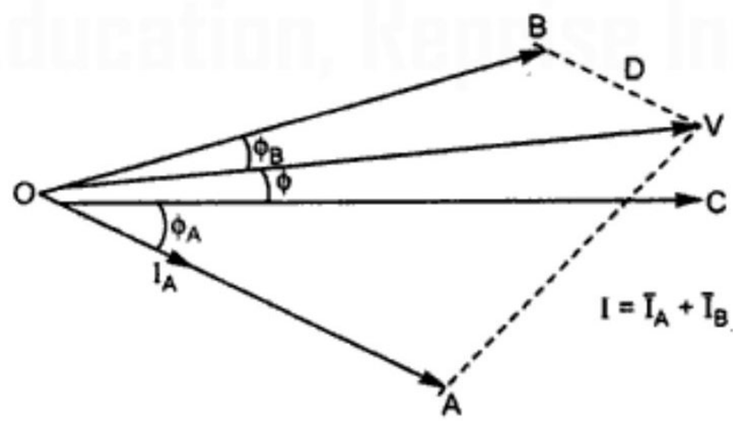

Fig. 3. *Phasor diagram of Parallel circuit.*

Currents in the branches A and B have been represented by OA and OB respectively. Phasor sum of OA and OB is given by OD, which represents total current, I. The power factor of the circuit can also be obtained from the phasor diagram. This method of finding the resultant current by drawing a phasor diagram, gives clear insight into the problem. This method can be used for complicated circuit also.

Copyrighted material
Downloaded From : www.EasyEngineering.net

Downloaded From : www.EasyEngineering.net

Analytical Method

The resultant current can also be obtained by resolving the branch currents, I_A and I_B into their X- and Y-components as shown in Figure and then combining these properly.

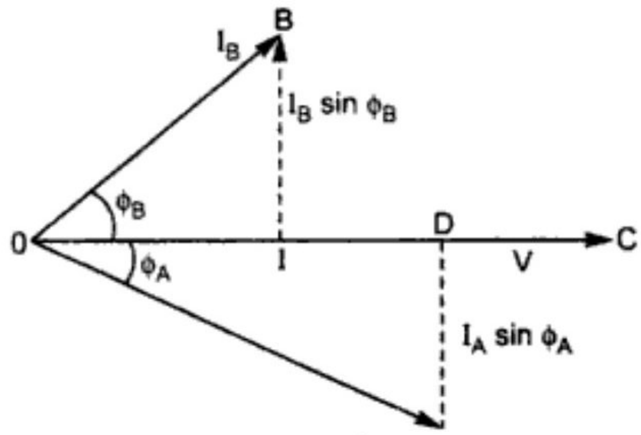

Fig. 4. *Resolution of branch current.*

From the above phasor diagram,

X-component of $I_A(OD) = I_A \cos \varnothing_A$

X-component of $I_B(OE) = I_B \cos \varnothing_B$

Sum of X - component (active components) of branch currents

$$= I_A \cos \varnothing_A + I_B \cos \varnothing_B$$

Now,

Y-component of $I_A(AD) = -I_A \sin \varnothing_A$

Y-component of $I_B(BE) = I_B \sin \varnothing_B$

Therefore the sum of Y components (reactive components) of branch currents

$$= -I_A \sin \varnothing_A + I_B \sin \varnothing_B$$

Active components of resultant current = I Cos $\varnothing$

Reactive component of resultant current= I Sin $\varnothing$

Hence,

$$I \cos \varnothing = I_A \cos \varnothing_A + I_B \cos \varnothing_B$$

$$I \sin \varnothing = -I_A \sin \varnothing_A + I_B \sin \varnothing_B$$

$$I = \sqrt{\left\{(I_A \cos \varnothing_A + I_B \cos \varnothing_B)^2 + (-I_A \sin \varnothing_A + I_B \sin \varnothing_B)^2\right\}}$$

$$\tan \varnothing = \frac{(-I_A \sin \varnothing_A + I_B \sin \varnothing_B)}{(I_A \cos \varnothing_A + I_B \cos \varnothing_B)}$$

$$= \frac{\text{Sum of reactive components of branch currents}}{\text{sum of active components of branch currents}}$$

Power factor of the circuit as a whole is,

$$\text{Cos } \varnothing = \frac{(I_A \cos \varnothing_A + I_B \cos \varnothing_B)}{I}$$

$$= \frac{\text{Sum of active components of branch currents}}{\text{Resultant current}}$$

Urheberrechtlich geschütztes Material
Downloaded From : www.EasyEngineering.net

Downloaded From : www.EasyEngineering.net

The analytical method of finding the resultant current is quick and more convenient but does not give clear insight into the problem.

Admittance Method

The admittance Y is defined as reciprocal of impedance

$$Y = \frac{1}{Z} = \frac{I}{V}$$

Unit of admittance is siemens (S)

Pure Resistance : For a circuit containing pure resistance R, the admittance is

$$Y_R = \frac{1}{Z_R} = \frac{1}{R} = G$$

Where G is the conductance, it is the reciprocal of resistance.

Pure Inductance : For a circuit containing pure inductance L, the admittance in

$$Y = \frac{1}{Z_L} = \frac{1}{jX_L} = -\frac{j}{X_L} = -jB_L$$

Where B_L is called the inductive susceptance. It is the reciprocal of the inductive reactance X_L

Inductive susceptance

$$B_L = \frac{1}{X_L} = \frac{1}{\omega L}$$

Pure Capacitance : For a circuit containing pure capacitance C, there admittance is

$$Y_C = \frac{1}{Z_C} = \frac{1}{-jX_C} = \frac{j}{X_C} = j\omega C = j\,B_C$$

Where B_C is called the capacitive susceptance, it is the reciprocal of capacitive reactance X_C.

Capacitive susceptance

$$B_C = \frac{1}{X_C} = \omega C$$

A circuit in which $X_L > X_C$ is called an inductive circuit. Similarly a circuit in which $X_C > X_L$ is called capacitive circuit.

Impedance Z of the circuit can be resolved into two components, a real components R(Resistance) and an imaginary component X(reactance) as shown in the impedance triangle Fig. 5.

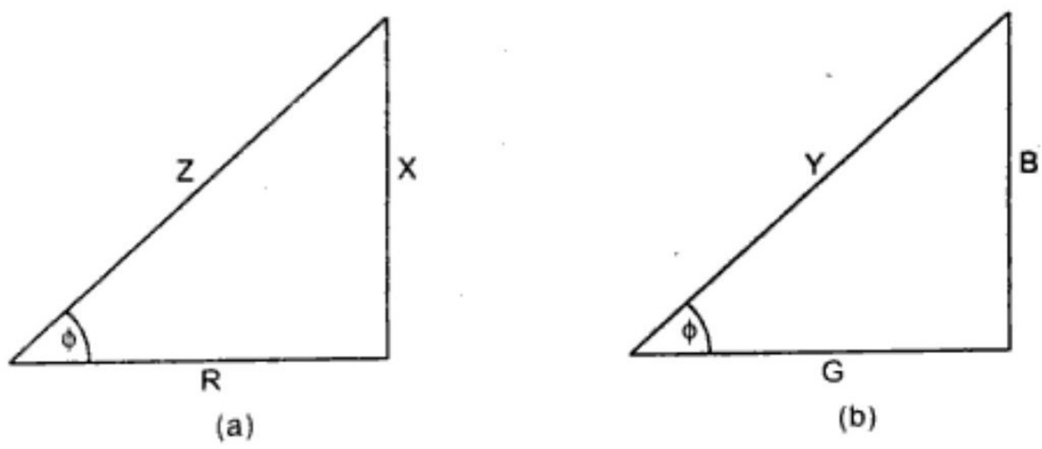

Fig. 5. *(a) Impedance triangle (b) Admittance triangle.*

Urheberrechtlich geschütztes Material
Downloaded From : www.EasyEngineering.net

Downloaded From : www.EasyEngineering.net

Similarly the admittance may be resolved into two components, a real component called conductance G and an imaginary component termed susceptance B as shown in the admittance triangle in Fig. 5.

$$\tan \varnothing = \frac{X}{R} = \frac{B}{G}$$

$$Y^2 = G^2 + B^2$$

Admittance $\quad Y = \sqrt{(G^2 + B^2)}$

Resultant current, $\quad I = V.Y$

Power factor of the circuit,

$$\cos \varnothing = \frac{G}{Y}$$

Admittance of a Series Circuit

$$Y = \frac{1}{Z} = \frac{1}{(R + jX_L)}$$

$$= \frac{(R - jX_L)}{\{(R + jX_L).(R - jX_L)\}}$$

$$= \frac{(R - jX_L)}{R^2 + X_L^2} = \frac{R}{(R^2 + X_L^2)} - \frac{jX_L}{(R^2 + X_L^2)}$$

$$= G - jB_L = \sqrt{(G^2 + B_L^2)}$$

Conductance of this circuit

$$G = \frac{R}{(R^2 + X_L^2)} = \frac{R}{Z^2}$$

Inductive susceptance of this circuit,

$$B_L = \frac{X_L}{(R^2 + X_L^2)} = \frac{X_L}{Z^2}$$

A series circuit consisting of resistance R and capacitive reactance X_C is considered,

Impedance of this circuit

$$Z = \sqrt{(R^2 + X_C^2)} = R - jX_C$$

$$= \frac{(R + jX_C)}{(R - jX_C).(R + jX_C)} = \frac{R + jX_C}{(R^2 + X_C^2)}$$

$$= \frac{R}{(R^2 + X_C^2)} + \frac{jX_C}{(R^2 + X_C^2)} = G + jB_C$$

Urheberrechtlich geschütztes Material
Downloaded From : www.EasyEngineering.net

Downloaded From : www.EasyEngineering.net

$$= \sqrt{\left(G^2 + B_C^2\right)}$$

Conductance $$G = \frac{R}{\left(R^2 + X_C^2\right)} = \frac{R}{Z^2}$$

Capacitive susceptance $$B_C = \frac{X_C}{\left(R^2 + X_C^2\right)} = \frac{X_C}{Z^2}$$

Hence for series circuit, the conductance is the ratio of its resistance to the square of its impedance and the susceptance is the ratio of its reactance to square of impedance.

Admittance of a Parallel Circuit

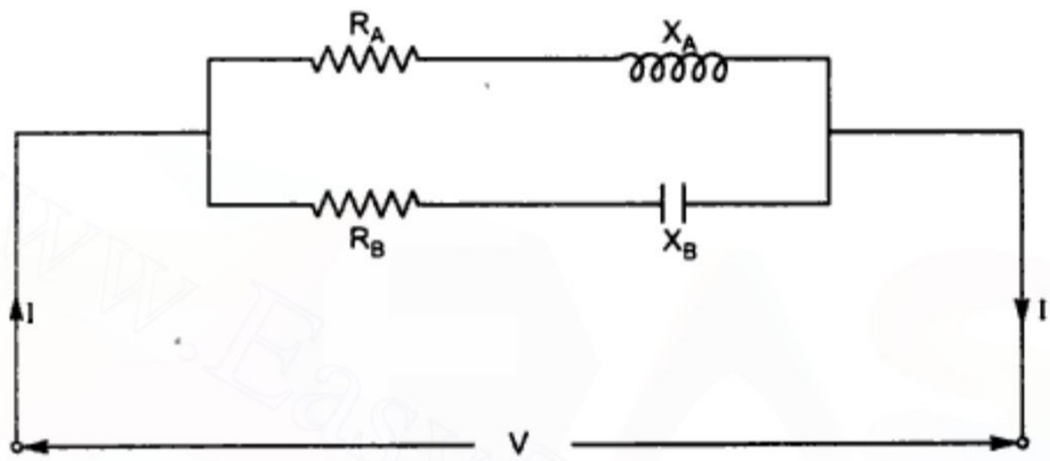

Fig. 6. *Parallel circuit.*

Conductance of the branch A, $$G_A = \frac{R_A}{\left(R_A^2 + X_A^2\right)} = \frac{R_A}{Z_A^2}$$

Inductive susceptance of branch A, $$B_A = \frac{X_A}{\left(R_A^2 + X_A^2\right)} = \frac{X_A}{Z_A^2}$$

Admittance of branch A, $$Y_A = G_A - jB_A$$
$$= \frac{R_A}{Z_A^2} - \frac{j.X_A}{Z_A^2}$$

Conductance of branch B, $$G_B = \frac{R_B}{\left(R_B^2 + X_B^2\right)} = \frac{R_B}{Z_B^2}$$

Capacitive susceptance of branch B, $$B_B = \frac{X_B}{\left(R_B^2 + X_B^2\right)} = \frac{X_B}{Z_B^2}$$

Admittance of branch B, $$Y_B = G_B + jB_B = \frac{R_B}{Z_B^2} + \frac{j.X_B}{Z_B^2}$$

Total admittance of the parallel circuit

$$Y = Y_A + Y_B \text{ (Phasor sum)}$$
$$= (G_A - jB_A) + (G_B + jB_B)$$
$$= (G_A + G_B) - j.(B_A + B_B)$$

Material com direitos autorais
Downloaded From : www.EasyEngineering.net

Downloaded From : www.EasyEngineering.net

$$Y = \frac{R_A}{Z_A^2} + \frac{R_B}{Z_B^2} - j\left(\frac{X_A}{Z_A^2} - \frac{X_B}{Z_B^2}\right)$$

Total admittance,
$$Y = \sqrt{\left[\left(\frac{R_A}{Z_A^2} + \frac{R_B}{Z_B^2}\right)^2 + \left(\frac{X_A}{Z_A^2} - \frac{X_B}{Z_b^2}\right)^2\right]}$$

Total current drawn by the parallel circuit I = VY

Power factor of the circuit as whole

$$\cos \varnothing = \frac{G}{Y} = \frac{(G_A + G_B)}{Y}$$

Hence in solving the problem on parallel circuit by this method, first conductance and susceptance of each branch of the parallel circuit is to be calculated. The sum of the conductance and susceptance of various branches gives the total conductance and susceptance of parallel circuits respectively.

Therefore total admittance of the circuit can be worked out from the total conductance and susceptance. Once the total admittance of the circuit is known, the resultant current and the power factor of the circuit can be determined.

EXERCISES

1. A parallel circuit consisting of the following three branches is connected to a 220 V ac supply.

   Branch A: purely resistive, resistance, 10 ohm.

   Branch B: inductive, resistance 5 Ω,reactance, 8 Ω

   Branch C: capacitive, resistance, 6 Ω reactance 16 Ω

   Calculate (*i*) current in each branch, (*ii*) total current taken from the supply and (*iii*) power of the combined circuit.
2. Two inductive coils of resistances 10 and 20 Ω, and inductive reactance's of 7.5 and 15 Ω are connected in parallel across a 230 V, ac mains. Calculate (*i*) current in each coil (*ii*) total current drawn by the combination and (*iii*) the power factor of the combination.
3. An inductive circuit having a resistance of 5 Ω and inductance of 10 μH and a capacitive circuit with resistance with resistance 8 Ω and capacitance 314 μF are connected in parallel across a 100 V, 50 Hz supply. Calculate (*i*) current through the inductive and capacitive circuit (*ii*) angle of phase difference of branch currents with respect to applied voltage and (*iii*) total current drawn by the combination.
4. An inductive coil of resistance 15 Ω and inductive reactance 45 Ω is connected in parallel with a capacitor of capacitive reactance 50 Ω.The combination is charged with a 230 V, 50 Hz ac supply. Find the total current drawn by the circuit and its power factor. Draw the phasor diagram of the circuit with proper scaling
5. A 200 W discharge lamp takes a current of 2 amps at unity power factor. Calculate the inductance of choke required to enable the lamp to work from 230 V, 50 Hz supply. Find also the capacitance of the condenser to be connected across the mains. Find also the capacitance of condenser to be connected across the mains to bring the resultant power factor unity.

Copyrighted material
Downloaded From : www.EasyEngineering.net

Downloaded From : www.EasyEngineering.net

6. Two impedances, $Z_1 = 8 + j6\ \Omega$ and $8 - j6\ \Omega$ are connected in parallel across a single phase, 50 Hz supply. Find the power taken by each branch if the total current drawn is 20 Amp.
7. A coil having resistance of 20 Ω and an inductance of 0.1 H is connected in parallel with 10 μF condenser across 230 V variable frequency supply. Calculate (*i*) the frequency and (*ii*) current through the coil, when the total current drawn by the parallel combination is in phase with the voltage.
8. A series-parallel circuit is arranged as follows:

   Branch A-resistance 8 Ω, Inductive reactance 20 Ω

   Branch B-resistance 10 Ω, Inductive reactance 5 Ω

   These two branches are connected in parallel. A third branch C is now connected in Series with the parallel combination, whose resistance is 5 Ω and capacitive reactance, 2 Ω. Calculate (*i*) equivalent impedance of the entire circuit and (*ii*) phase angle between applied voltage and total current.
9. Three impedances $Z_A = (20 - j15)\ \Omega$, $Z_B = -j50\ \Omega$ and $Z_C = (12 + j13)\ \Omega$ are connected in parallel across a 230 V, 50Hz supply. Using the symbolic method, find out the values of three branch currents and the total current in complex notation.
10. A series parallel circuit consists of three branches A, B, C in Parallel. The Parameters of the various branches are given below:

    Branch A: resistance 5 Ω, inductance 0.015 H

    Branch A: resistance 5 Ω, Capacitance 0.015 μF

    Branch C: resistance 10 Ω.

    The entire circuit is connected across a voltage of 230 V, 50 Hz.Calculate (*i*) the impedance of the circuit (*ii*) current flowing in each branch (*iii*) power consumed in each branch.
11. Two impedances $Z_A = (10 + j15)\ \Omega$ and $Z_B = (10 + R) + j\,(25 - X_C)$ are connected in parallel across a single-phase ac supply. The Current taken by the two impedance branches A and B are equal in magnitude and the phase angle between them 90°.Calculate (*i*) the values of R And X_C and (*ii*) the phase difference of the branch currents with respect to the applied voltage.
12. Three impedances, $Z_A = (11 + j4)\ \Omega$, $Z_B = (3 + j4)\ \Omega$ and $Z_C = (6 - j8)\ \Omega$ are in parallel. Find the conductance, susceptance and admittance of each branch and for total circuit.

Copyrighted material
Downloaded From : www.EasyEngineering.net

Downloaded From : www.EasyEngineering.net

8

Electric Resonance

Introduction

Resonance is defined as the condition in a circuit containing at least one inductor and one capacitor, when the supply voltage and the supply current are in phase. Thus, at resonance the equivalent impedance of the circuit is purely resistive. Since the supply voltage and supply current are in phase, the power factor of a circuit is unity. At resonance the circuit impedance Z and admittance Y are real quantities.

Effect of Frequency Variation in R, L and C Series Circuit

An ac circuit containing resistance, inductance and capacitance in series has been shown in Fig. 1.

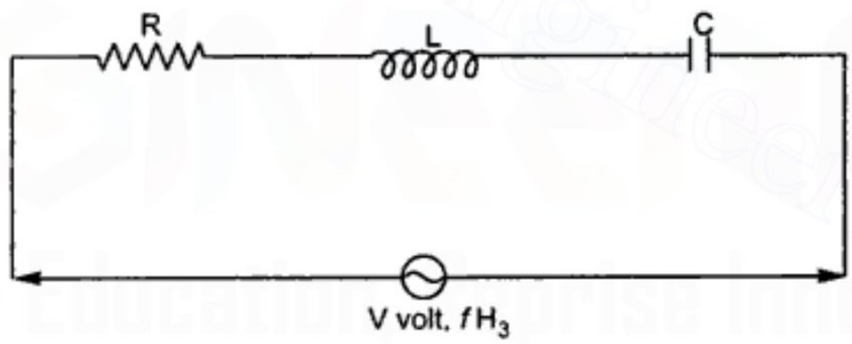

Fig. 1. *R-L-C Series circuit.*

The relationship of various parameters of this circuit with the frequency of supply is given by,

Inductive reactance of the circuit, $X_L = \omega L = 2\pi f L$

Capacitive reactance of the circuit, $X_C = \dfrac{1}{\omega C} = \dfrac{1}{2\pi f C}$

Resultant reactance $$X = X_L - X_C = \left(\frac{2\pi f L - 1}{2\pi f C}\right)$$

Resultant reactance will be positive if inductive reactance is greater than the capacitive reactance, in case capacitive reactance is greater than the inductive reactance of the circuit, the resultant will be negative.

Copyrighted material
Downloaded From : www.EasyEngineering.net

Downloaded From : www.EasyEngineering.net

Impedance of the circuit, $Z = \sqrt{\left\{R^2 + (X_L - X_C)^2\right\}}$

$$= \sqrt{\left\{R^2 + \left(2\pi f L \frac{-1}{2\pi f C}\right)^2\right\}}$$

Equation indicates that the various parameters of this circuit except resistance R are functions of frequency. Inductive reactance is directly proportional to the supply frequency, whereas capacitive reactance is inversely proportional to frequency. Thus on a plot of frequency vs. parameters of the circuit, inductive reactance is represented by the straight line and capacitive reactance by a rectangular hyperbola. Moreover inductive reactance has been shown in the fourth quadrant, because of its negative nature. The curve of resultant reactance is obtained from the cures of X_L and X_C. In a similar way, the impedance curve has been plotted from resistance line and the effect of frequency upon various parameters of this circuit as discussed above.

Referring to Fig. 2, it is observed that the resultant reactance is negative for all parameters below OA, and positive for frequencies greater than OA for a particular value of inductance and capacitance. It is equal to zero at the frequency OA. Hence the impedance of the circuit is minimum at the instant the resultant reactance becomes zero, *i.e.* at frequency OA. At all other frequencies, the impedance is higher than this value. The rms value of current flowing in such a circuit is given by,

$$I = \frac{V}{Z}$$

$$I = \frac{V}{\sqrt{\left\{R^2 + (X_L - X_C)^2\right\}}} = \frac{V}{\sqrt{\left\{R^2 + \left(2\pi f L \frac{-1}{2\pi f C}\right)^2\right\}}}$$

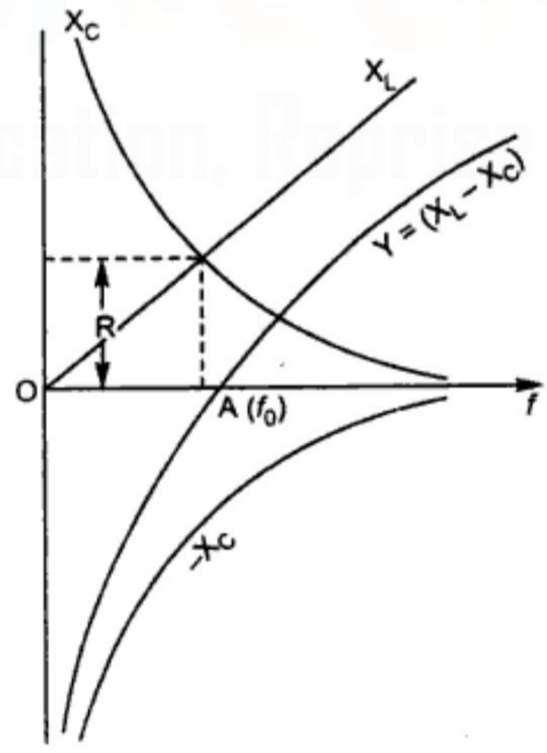

Fig. 2. *Effect of frequency on circuit parameters.*

Copyrighted material
Downloaded From : www.EasyEngineering.net

Downloaded From : www.EasyEngineering.net

Thus the current is maximum when the impedance of the circuit is minimum, *i.e.* at frequency OA. At all other frequencies other than OA, impedance increases and therefore the current decreases Fig. 3 shows the effect of frequency variation upon the current drawn by the circuit and the voltages across the various parameters of the circuit. It is observed that the voltages across the inductance are equal to the voltage across the capacitance at the frequency f_0. Current is maximum and the impedance is minimum at this frequency. Moreover, the whole circuit behaves as a purely resistive circuit and thus the current is in phase with applied voltage at this frequency. This condition is said to be the condition for electrical resonance, an effect that is extremely important in radio work. Under the condition of resonance, the voltages across the inductor and capacitor are equal and may be many times greater than the applied voltage.

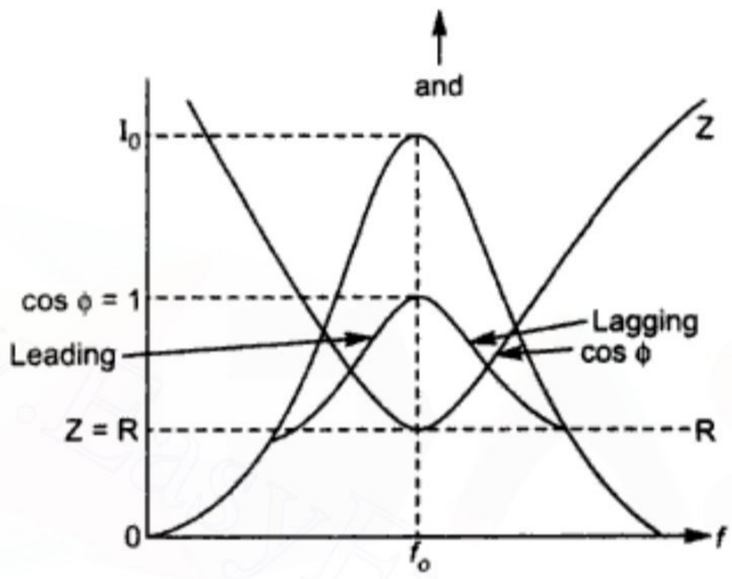

Fig. 3. *Effect of frequency on voltage, current and power factor.*

Resonance in R-L-C Series Circuit

The frequency at which resonance occurs is called resonant frequency, denoted by f_0. Resonance occurs when,

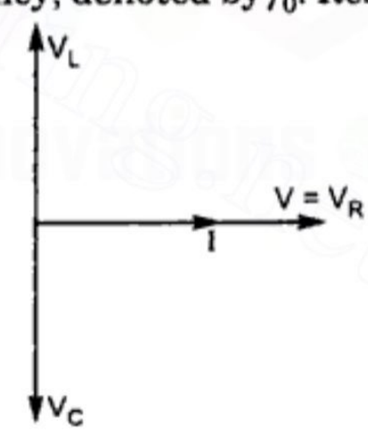

Fig. 4 (a). *When $V_L = V_C$, then $f = f_0$*

Inductive reactance = Capacitive reactance

$$X_L = X_C$$

$$\omega L = \frac{1}{\omega C}$$

$$2\pi f L = \frac{1}{2\pi f C}$$

Thus the frequency at resonance

$$f_0 = \frac{1}{2\pi}\sqrt{LC} \text{ Hz}$$

This frequency is called resonant frequency.

If ω_0 = resonant frequency in radian/second.

$$\omega_0 = 2\pi f_0 = \frac{1}{\sqrt{LC}} \text{ radian/sec.}$$

Copyrighted material
Downloaded From : www.EasyEngineering.net

Downloaded From : www.EasyEngineering.net

The series resonance effect may be provided by the following methods:

1. Varying frequency, keeping L and C constant.
2. Varying either L or C (or both) for a given frequency shown in Fig. 4.

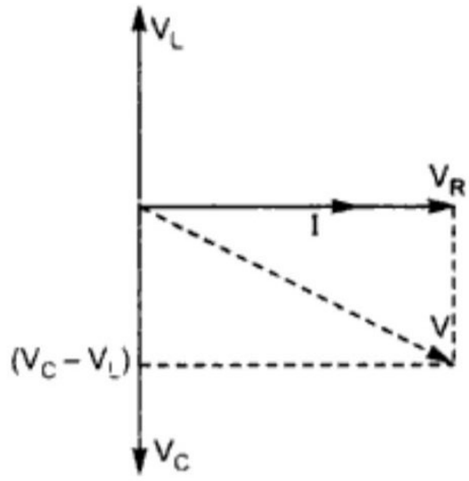

Fig. 4 (b) *When $V_L > V_C$, then $f < f_0$*

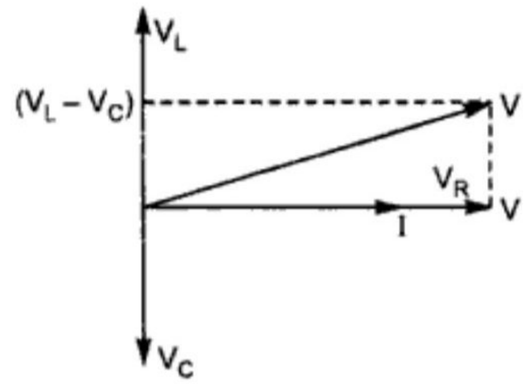

Fig. 4 (c) *When $V_L > V_C$, then $f > f_0$*

Voltage Magnification

Voltage across the inductance at resonant frequency,

$$V_L = I.X_L = I.\omega L$$

$$= I.(2\pi f_0)L$$

$$= I\left(\frac{2\pi \times 1}{2\pi\sqrt{LC}}\right)L = I.\left(\sqrt{\frac{L}{C}}\right)$$

Current flowing in the circuit at resonance, $I = \frac{V}{R}$

$$V_L = \left[\frac{V}{R}\right]\left[\frac{\sqrt{L}}{C}\right]$$

$$V_L = V\left[\frac{\sqrt{L}}{CR^2}\right]$$

Voltage across the capacitance at resonance frequency is given by,

$$V_C = I.X_C = I.\left(\frac{1}{\omega C}\right)$$

$$= \frac{I}{2\pi f_0 C} = \frac{I}{2\pi C} \times \frac{1}{\frac{1}{2}\pi\sqrt{LC}} \qquad \left(f_0 = \frac{1}{2\pi\sqrt{LC}}\right)$$

$$= \frac{I}{2\pi C} \times \frac{2\pi\sqrt{LC}}{1} = I\sqrt{\frac{L}{C}}$$

$$= \frac{V}{R}\left(\frac{1}{\sqrt{\frac{C}{L}}}\right) = \frac{V}{R}\left(\sqrt{\frac{L}{C}}\right) = V\left(\frac{\sqrt{L}}{CR^2}\right) \qquad \left(I = \frac{V}{R}\right)$$

Copyrighted material
Downloaded From : www.EasyEngineering.net

Downloaded From : www.EasyEngineering.net

Thus at resonant frequency f_0 both the voltages are equal and each is greater than applied voltage, hence a voltage magnification occurs at the resonance condition.

The voltage magnification at resonance is given by,

$$\text{Voltage magnitude at resonance} = \frac{\text{Voltage across L or C}}{\text{Supply voltage}}$$

$$\text{Q-factor} = \frac{V\sqrt{L}}{\frac{CR^2}{V}} = \frac{\sqrt{L}}{CR^2}$$

$$= \left(\frac{\sqrt{L}}{R}\right)\left(\frac{1}{\sqrt{C}}\right) = \frac{2\pi f_0 L}{R}$$

This is generally termed as Q-factor or quality factor of the circuit.

$$\text{Q-factor} = \frac{2\pi f_0 L}{R}$$

$$\text{Q-factor} = \frac{\omega_0 L}{R}$$

Here the current is maximum at resonance. Such a series resonant circuit is often referred to as an acceptor circuit.

Bandwidth of Series Resonant Circuit

The bandwidth of series resonant circuit is given by the band of frequencies, which lie between two points on either side of resonant frequency where the current falls to $\frac{1}{\sqrt{2}}$ or 0.707 of its maximum value at resonance. When the resistance of the circuit is zero *i.e.* curve 1, the current rises to infinity at resonant frequency f_0. The maximum current is comparatively high for low value of the resistance R and current curve exhibits very sharp peak as shown in curve 2. The maximum value of current corresponding to resonant frequency diminishes with a large value of circuit resistance and the current curves becomes flatter as indicated by the curves 3 and 4.

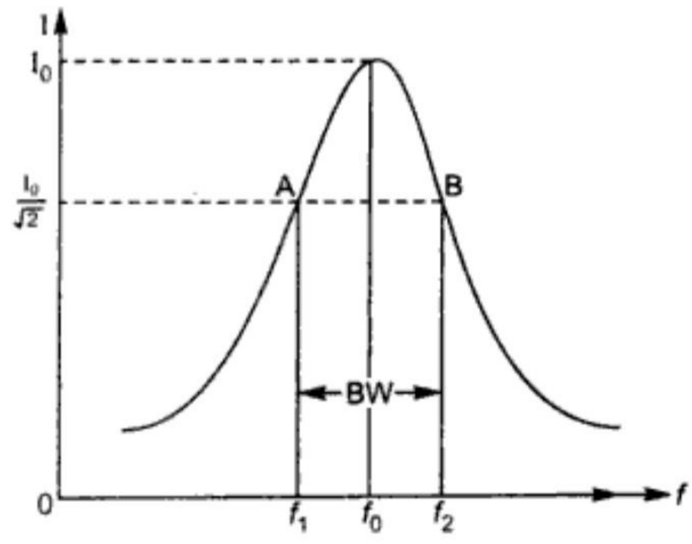

Fig. 5. *Bandwidth of Resonant Circuit.*

Copyrighted material
Downloaded From : www.EasyEngineering.net

Downloaded From : www.EasyEngineering.net

If a horizontal line AB at a height of $\frac{V}{R\sqrt{2}}$ is drawn, so as to cut any particular current-frequency (resonant) curve at f_1 and f_2 then $(f_2 - f_1)$ shown by the shaded strip in Fig. 4 is called the bandwidth. f_1 is called the lower cut-off frequency and f_2 is called the upper cutoff frequency point.

The current drawn by the circuit is given by

$$I = \frac{V}{\sqrt{\left[R^2 + \left(\omega L \frac{-1}{\omega C}\right)^2\right]}}$$

At point A and B shown in above figure, current

$$I = \frac{V}{R\sqrt{2}}$$

Thus to find f_1 or ω_1 and f_2 or ω_2 corresponding to points A and B

$$\frac{V}{R\sqrt{2}} = \frac{V}{\left[\sqrt{R^2 + \left(\omega L \frac{-1}{\omega C}\right)^2}\right]}$$

$$R^2 + \left(\omega L \frac{-1}{\omega C}\right)^2 = 2R^2$$

$$\left(\omega L \frac{-1}{\omega C}\right) \pm R = 0$$

$$(\omega^2 LC - 1 \pm R\omega C) = 0$$

$$\omega^2 - \frac{1}{LC} \pm R\frac{C}{L}\omega = 0$$

or $$\omega^2 - \frac{R_C}{L}\omega - \frac{1}{LC} = 0$$

$$\omega = \pm \frac{R}{2L} \pm \sqrt{\frac{R^2}{4L^2} + \frac{1}{LC}}$$

For low values of R, the term $\left(\frac{R^2}{4L^2}\right)$ can be neglected in comparison with the term $\frac{1}{LC}$.

Then ω is given by

$$\omega = \pm \frac{R}{2L} \pm \sqrt{\frac{1}{LC}}$$

The resonant frequency for this circuit is given by

$$f_0 = \frac{1}{2\pi}\sqrt{LC}$$

Copyrighted material
Downloaded From : www.EasyEngineering.net

Downloaded From : www.EasyEngineering.net

$$2\pi f_0 = \frac{1}{\sqrt{LC}}$$

$$\omega_0 = \frac{1}{\sqrt{LC}}$$

Substituting

$$\omega = \pm \frac{R}{2L} \pm \omega_0$$

$$\omega = \omega_0 \pm \frac{R}{2L}$$

$$\omega_1 = \omega_0 - \frac{R}{2L}$$

$$\omega_2 = \omega_0 + \frac{R}{2L}$$

$$\omega_2 - \omega_1 = \frac{R}{2L} + \frac{R}{2L}$$

$$\omega_2 - \omega_1 = \frac{R}{L}$$

$$f_2 - f_1 = \frac{R}{2\pi L}$$

Hence bandwidth of series resonant circuit is

$$f_2 - f_1 = \frac{R}{2\pi L}$$

Resonance in Parallel Circuits

The basic condition of resonance, *i.e.* power factor of the entire circuit being unity, remains the same for parallel circuit also. So resonance will occur in a parallel circuit, when the power factor of entire circuit becomes unity.

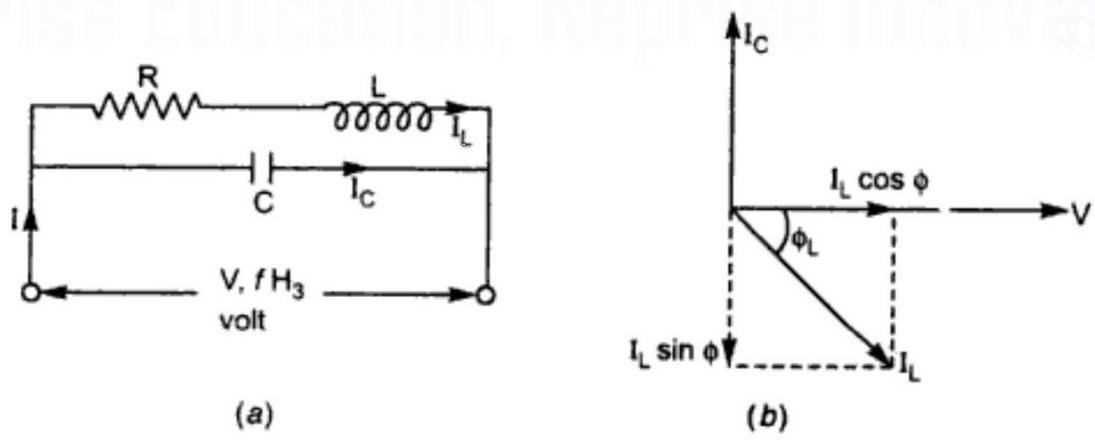

Fig. 6 *Parallel resonant circuit.*

The Figure shows a parallel circuit consisting of an inductive coil in parallel with a capacitor. The phasor diagram of the circuit with applied voltage as reference phasor has been drawn in Fig. 6. The current drawn by the inductive branch lags the applied voltage by an angle ϕ. It can be resolved into two components, an active component of current and reactive component as shown in Fig. 6. The current drawn by the capacitive branch leads the applied

Copyrighted material
Downloaded From : www.EasyEngineering.net

Downloaded From : www.EasyEngineering.net

voltage by 90 degree. The power factor of the circuit becomes unity; when the total current drawn by entire circuit is in phase with the applied voltage. This will happen only when the current drawn by the capacitive branch I_C equal reactive component of current of inductive branch.

Hence for resonance in parallel circuit,

$$I_C = I_L \sin \phi$$

Current in capacitive branch, $I_C = \dfrac{V}{X_C}$

Current in inductive branch, $I_L = \dfrac{V}{Z_L}$

where Z_L is the impedance of inductive branch,

Impedance of inductive branch $Z_L = R + jX_L$

$$= \sqrt{\left(R^2 + X_L^2\right)}$$

angle of lag of inductive branch current with respect to applied voltage,

$$\phi = \tan^{-1}\left(\frac{X_L}{R}\right)$$

Thus $$\sin \phi = \frac{X_L}{Z_L}$$

$$I_L \sin \phi = \left(\frac{V}{Z_L}\right) \cdot \left(\frac{X_L}{Z_L}\right)$$

$$= \left(\frac{VX_L}{Z_L^2}\right)$$

Resonance in parallel circuit will occur when

$$\frac{V}{X_C} = \frac{VX_L}{Z_L^2}$$

or $$Z_L{}^2 = X_L X_C$$

$$R^2 + (\omega L)^2 = \omega L\left(\frac{1}{\omega C}\right)$$

$$R^2 + (2\pi f_0 L)^2 = \frac{2\pi f_0 L}{2\pi f_0 C}$$

$$(2\pi f_0 L)^2 = \frac{L}{C - R^2}$$

$$(2\pi f_0)^2 = \frac{1}{CL} - \frac{R^2}{L^2}$$

Material com direitos autorais
Downloaded From : www.EasyEngineering.net

Downloaded From : www.EasyEngineering.net

$$2\pi f_0 = \sqrt{\left(\frac{1}{LC} - \frac{R^2}{L^2}\right)}$$

$$f_0 = \left(\frac{1}{2\pi}\right)\left(\sqrt{\frac{1}{LC} - \frac{R^2}{L^2}}\right)$$

Current Magnification

At resonance in a parallel circuit, the branch current may be many times greater than the supply. Thus by means of a parallel resonant circuit, the current taken from the supply can be greatly magnified. Hence the type of resonance is called current resonant. This current magnification in parallel circuit is normally termed as Q-Factor of the circuit.

$$\text{Q-Factor of the circuit} = \frac{I_C}{I_L}\cos\phi$$

$$= \frac{I_L \sin\Phi}{I_L \cos\Phi} = \tan\phi = \frac{X_L}{R} = \frac{2\pi f_0 L}{R}$$

Hence at resonance the resultant current drawn by the parallel circuit is in phase with the applied voltage.

$$\text{Resultant current } I' = I_L \cos\phi$$

$$= \left(\frac{V}{Z_L}\right)\left(\frac{R}{Z_L}\right) = \frac{VR}{Z_L^2}$$

Under the condition of resonance,

$$Z_L^{\,2} = X_L X_C$$

$$= \frac{\omega L \times 1}{\omega C} = \frac{L}{C}$$

Substituting for $Z_L^{\,2}$, resultant current

$$I' = \frac{VR}{\left(\frac{L}{C}\right)} = \frac{V}{\left(\frac{L}{CR}\right)}$$

Thus the impedance offered by a resonant parallel circuit, $Z_0 = \frac{L}{CR}$.

Z_0 is called the dynamic impedance of the circuit. This impedance is purely resistive because it is independent of frequency. It is seen that lower the resistance of the coil, the higher the value of Z_0. Hence the value of impedance at resonance is maximum and the resultant is minimum current. A parallel resonant circuit is also called a rejector circuit. Since the current at resonance is minimum. In other words, a tank circuit almost rejects the current at resonance. Figure shows the characteristics of the parallel circuit consisting of an inductance L and capacitance C in parallel plotted against frequency, the applied voltage being constant.

$$\text{Inductive susceptance} = \frac{1}{X_L} = \frac{1}{2\pi f L}$$

Material com direitos autorais
Downloaded From : www.EasyEngineering.net

Downloaded From : www.EasyEngineering.net

Thus inductive susceptance is inversely proportional to the frequency and it is represented by a rectangular hyperbola.

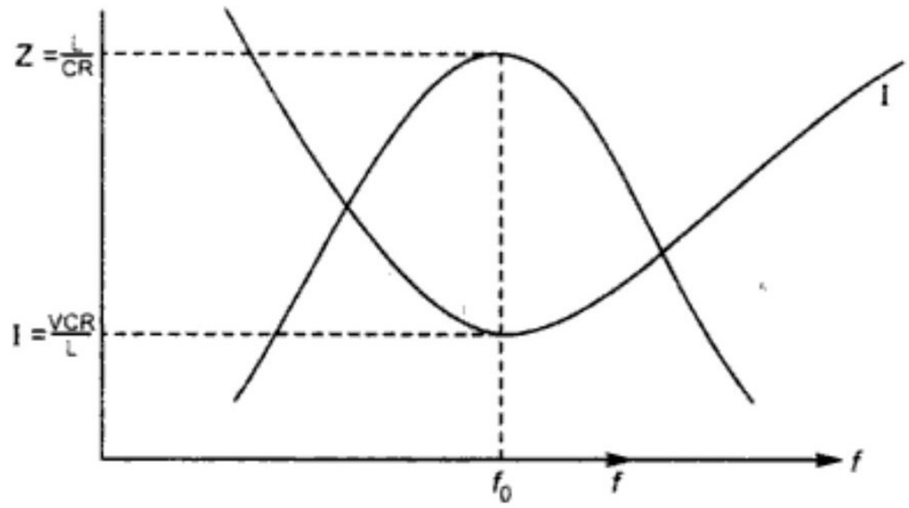

Fig. 7. *Resonance characteristic.*

Capacitive susceptance is directly proportional to frequency and is represented by a straight line passing through the origin. Total susceptance is the sum of the inductive and capacitive susceptance. As the conductance in the circuit is zero, the total susceptance is also equal to the total admittance of the circuit. The total current is zero (minimum) when the total admittance of the circuit becomes zero. The frequency at which total current becomes minimum is the resonant frequency f_0. Below the resonant frequency the inductive susceptance predominates thus making the circuit current to be lagging whereas beyond f_0 capacitive susceptance predominates and the current leads the applied voltage. At resonant frequency f_0, the current is in phase with the applied voltages.

SOLVED NUMERICAL PROBLEMS

Example 1: *The series R-L-C circuit is composed of components having R = 1.0 Ω, L = 100 mH and C = 50 μF. Calculate the resonance frequency and corresponding input current at 25 V.*

Solution : $R = 1.0$, $L = 100$ mH and $C = 50\ \mu F = 5 \times 10^{-6}$ F

$V = 25$ V, $L = 100 \times 10^{-3}$ H

Resonance frequency, $$f_0 = \frac{1}{2\pi\sqrt{LC}}$$

$$= \frac{1}{2 \times 3.14\sqrt{100 \times 10^{-3} \times 50 \times 10^{-6}}}$$

$$= 71.21 \text{ Hz}$$

At resonance $Z = R = 1.0\ \Omega$

$$I_0 = \frac{V}{R} = \frac{25}{1} = 25 \text{ amp.}$$

Example 2: *A circuit having a resistance of 10 Ω, an inductance of 0.5 H and a variable capacitance in series, is connected across a 110 V, 50 Hz supply. Calculate (i) The value of capacitance is give resonance, (ii) current (iii) voltage across the inductance (iv) voltage across the capacitance, and (v) Q factor of the circuit.*

Material com direitos autorais
Downloaded From : www.EasyEngineering.net

Downloaded From : www.EasyEngineering.net

Solution : Resonance will occur at 50 Hz, provided the inductive reactance of the circuit equals the capacitive reactance at this frequency *i.e.*,

At resonance, $X_L = X_C$

$$2\pi f L = \frac{1}{2\pi f C}$$

$$2\pi \times 50 \times 0.5 = \frac{1}{2\pi \times 50 \times C}$$

$$C = \frac{1}{(2\pi \times 50)^2 \times 0.5}$$

$$C = 20.28 \times 10^{-6}\ \text{F}$$

$$C = 20.28\ \mu\text{F}.$$

(*ii*) At resonance, $X_L = X_C$. Thus the impedance of the circuit,

$$Z = R = 10\ \Omega$$

Current drawn by the circuit $= \frac{110}{10} = 11$ A

(*iii*) Inductive reactance of the circuit $X_L = 2\pi f L$

$$X_L = 2\pi \times 50 \times 0.5$$
$$= 157\ \Omega$$

Voltage across inductance, $V_L = I \,.\, X_L$

$$= 11 \times 157$$
$$= 1727 \text{ Volt.}$$

(*iv*) Capacitive reactance, $X_C = X_L = 157\ \Omega$

Voltage across the capacitor $= I \,.\, X_C$

$$= 11 \times 157 = 1727 \text{ Volt.}$$

(*v*) Q-factor of the circuit $= \frac{\text{Voltage across L or C}}{\text{Supply voltage}}$

$$= \frac{1727}{110} = 15.7.$$

Example 3: *A large coil of inductance 1.5 H and resistance 50 Ω is connected in series with a capacitor of capacitance 25 μF. Calculate the frequency at which the circuit resonates. If a voltage of 110 V is applied to the circuit at resonant condition, calculate drawn current from the supply and voltage across the coil and capacitor.*

Solution :

$$R = 50\ \Omega,\ L = 1.5\ \text{H},\ C = 25\ \mu\text{F} = 25 \times 10^{-6}\ \text{F}$$
$$V = 110\ \text{V}$$

$$f_0 = \frac{1}{2\pi\sqrt{LC}} = \frac{1}{2\pi\sqrt{1.5 \times 25 \times 10^{-6}}} = 26\ \text{Hz}$$

$$I_0 = \frac{V}{R} = \frac{110}{50} = 2.2\ \text{A}$$

Reactance of coil at resonance

Material com direitos autorais
Downloaded From : www.EasyEngineering.net

Downloaded From : www.EasyEngineering.net

$$X_{L_0} = 2\pi f_0 L$$
$$= 2\pi \times 26 \times 1.5 = 244.92\ \Omega$$

Reactance of capacitor at resonance

$$X_{C_0} = X_{L_0} = 244.92\ \Omega$$

Impedance of the coil at resonance

$$Z_{coil} = \sqrt{R^2 + X_{L_0}^2} = \sqrt{(50)^2 + (244.92)^2}$$
$$= 250\ \Omega$$

Voltage across the coil $= Z_{coil} \cdot I_0$
$= 250 \times 2.2 = 550$ Volt.

Voltage across the capacitor $= X_{C_0} \cdot I_0$

$= 244.92 \times 2.2 = 538.82$ Volt.

Example 4: *A choke coil is connected in series with a 25 μF capacitor. With a constant supply voltage of 220 V the circuit takes its maximum current of 45 amp, when the supply frequency is 50 Hz. Calculate (a) the resistance and inductance of the choke coil ; (b) the voltage across the capacitor.*

Solution : $f_0 = 50$ Hz, V = 220 V, I = 45 amp, C = 25 μF = 25×10^{-6} F

(*a*) At resonance,

$$I_0 = \frac{V}{R}$$

$$R = \frac{V}{I_0} = \frac{220}{45} = 4.89\ \Omega.$$

$$f_0 = \frac{1}{2\pi\sqrt{LC}}$$

$$50 = \frac{1}{2 \times 3.14\sqrt{L \times 25 \times 10^{-6}}}$$

$$25 \times 10^{-6} L = \frac{1}{(314)^2}$$

$$L = \frac{1}{(314)^2 \times 25 \times 10^{-6}}$$

$$L = 0.405\ \text{H}.$$

(*b*) Reactance of the capacitor

$$X_{C_0} = \frac{1}{2\pi f_0 C} = \left(\frac{1}{2\pi \times 50 \times 25 \times 10^{-6}}\right)$$

$$X_{C_0} = 127.39\ \Omega$$

Voltage across the capacitor

$$= X_{C_0} . I_0$$

Copyrighted material
Downloaded From : www.EasyEngineering.net

Downloaded From : www.EasyEngineering.net

$$= 127.39 \times 45$$

$$= 5732.48 \text{ Volts.}$$

Example 5: *In measurement a series R-L-C circuit resonance occur at 1.50 MHz if capacitance is 200 pF and Q-factor was 50. Determine the inductance and effective series resistance of the inductor ; neglect resistance of capacitor.*

Solution:

$$f_0 = 1.5 \text{ MHz}, \text{ C} = 200\, p\text{F}$$
$$= 200 \times 10^{-12} \text{ F}$$

At resonance,

$$X_L = X_C \quad Q = 50$$

$$2\pi f L = \frac{1}{2\pi f C}$$

$$L = \frac{1}{(2\pi f)^2 C}$$

$$L = \frac{1}{\left(2\pi \times 1.5 \times 10^6\right)^2 \times 200 \times 10^{-12}}$$

$$L = 5.63 \times 10^{-5} \text{ H}$$

$$L = 56.3\, \mu\text{H}$$

$$Q = \frac{W_0 L}{R} = \frac{2\pi f_0 L}{R}$$

$$50 = \frac{2 \times 3.14 \times 1.5 \times 10^6 \times 56.3 \times 10^{-6}}{R}$$

$$R = 10.61\, \Omega.$$

Example 6: *If the bandwidth of a resonant circuit is 10 kHz and lower half-power frequency is 120 kHz, what is the value of the upper half power frequency ? What is the value of the quality factor?*

Solution : Lower half power frequency = Resonant frequency $- \frac{1}{2}$ bandwidth

$$f_1 = f_0 - \frac{1}{2} \Delta f$$

$$120 = f_0 - \frac{1}{2} \times 10$$

$$f_0 = 120 + 5 = 125 \text{ kHz}$$

Upper half-power frequency = resonant frequency $+ \frac{1}{2}$ bandwidth

$$f_2 = f_0 + \frac{1}{2} \Delta F$$

$$= 125 + \frac{1}{2} \times 10 = 130 \text{ kHz}$$

$$\text{Q-factor} = \frac{\text{Resonant frequency}}{\text{Bandwidth}}$$

Copyrighted material
Downloaded From : www.EasyEngineering.net

Downloaded From : www.EasyEngineering.net

$$Q = \frac{f_0}{\Delta f} = \frac{125}{10} = 12.5.$$

Example 7: *In the take circuit components are 500 μF capacitor and coil of resistance of 50 Ω and inductance 250 mH. Calculate the frequency of resonance and Q-factor.*

Solution :

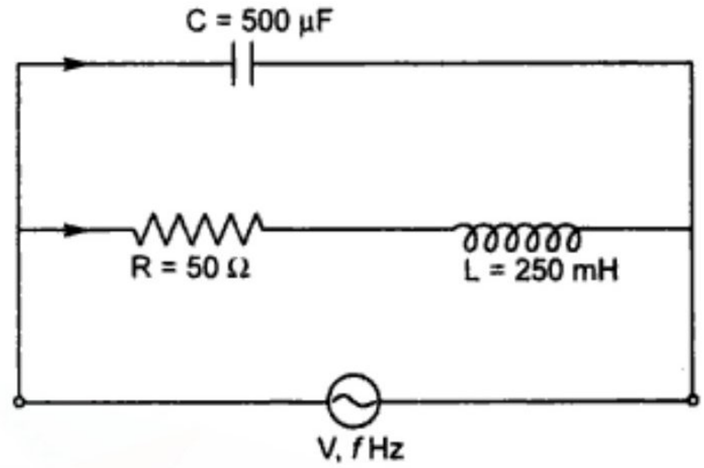

$$L = 250 \text{ mH} = 250 \times 10^{-3} \text{ H}, C = 500 \ \mu\text{F} = 500 \times 10^{-9} \ R = 50 \ \Omega$$

Resonant frequency,

$$f_0 = \frac{1}{2\pi}\sqrt{\frac{1}{LC} - \frac{R^2}{L^2}}$$

$$= \frac{1}{2 \times 3.14}\sqrt{\frac{1}{250 \times 10^{-3} \times 500 \times 10^{-9}} - \left(\frac{50}{250 \times 10^{-3}}\right)^2}$$

$$= \frac{1}{2 \times 3.14}\sqrt{8{,}00{,}000 - 40{,}000} = 449.26 \text{ Hz}$$

Example 8: *Find the value of L for the circuit drawn below in figure :*

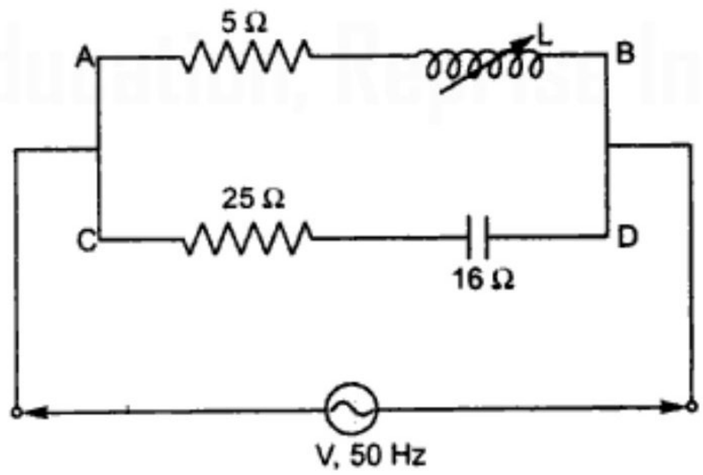

Solution : Let the admittance of branch AB be Y_1 and that of CD be Y_2.

$$\therefore \quad Y_1 = \frac{1}{5 + jX_L} = \frac{5 - jX_L}{25 + X_L^2} = \frac{5}{25 + X_L^2} - \frac{jX_L}{25 + X_L^2}$$

and

$$Y_2 = \frac{1}{25 - j16} = \frac{25 + j16}{625 + 256} = \frac{25}{881} + \frac{j16}{881}$$

Հեղինակային իրավունքով պաշտպանված նյութ
Downloaded From : www.EasyEngineering.net

Downloaded From : www.EasyEngineering.net

$$Y_2 = (0.028 + j0.018)$$

At resonance,

$$\frac{X_L}{25 + X_L^2} = \frac{16}{881}$$

$$881\, X_L = 16\, X_L^2 + 25 \times 16$$

$$16\, X_L^2 - 881\, X_L + 25 \times 16 = 0$$

$$X_L^2 - 55.06\, X_L + 25 = 0$$

$$X_L = \frac{55.06 \pm \sqrt{(55.06)^2 - 4 \times 1 \times 25}}{2}$$

$$X_L = \frac{55.06 \pm 54.14}{2}$$

$$X_L = 54.6\ \Omega$$

$$X_L = 0.46\ \Omega$$

When $X_L = 54.6 \quad X_L = 2\pi f L$

$$L = \frac{54.6}{2 \times 3.14 \times 50}$$

$$L = 0.173\ \text{H}$$

and $X_L = 0.46$

$$L = \frac{0.46}{100\pi}$$

$$L = 1.46\ \text{mH}.$$

Example 9: *A parallel R-L-C circuit has inductance of 10 mH and resistance of 5 Ω. What value of the capacitance will produce resonance frequency 800 Hz ? Calculate also the quality factor of the circuit.*

Solution : $R = 5\ \Omega,\ L = 10\ \text{mH},\ f_0 = 800\ \text{Hz}$

$$L = 10 \times 10^{-3}\ \text{H}$$

Let the value of capacitance to be C farad

$$f_0 = \frac{1}{2\pi\sqrt{LC}}$$

$$800 = \frac{1}{2\pi\sqrt{10 \times 10^{-3} \times C}}$$

$$C = \frac{1}{(800 \times 2\pi)^2 \left(10 \times 10^{-3}\right)}$$

$$C = 3.96 \times 10^{-6}\ \text{F}$$

$$C = 3.96\ \mu\text{F}$$

$$\text{Q-factor} = w_0 RC = 2\pi f_0 RC$$

$$= 2 \times 3.14 \times 800 \times 5 \times 3.96 \times 10^{-6}$$

$$= 0.099.$$

Հեղինակային իրավունքով պաշտպանված նյութ
Downloaded From : www.EasyEngineering.net

Downloaded From : www.EasyEngineering.net

Example 10: *A series R-L-C circuit resonates at a frequency of 1500 Hz and consumes 75 W power for 50 V a.c. source at resonant frequency. The bandwidth is 0.75 kHz, calculate R, L and C.*

Solution : $f_0 = 1500$ Hz, P = 75 W, V = 50 V, BW = 0.75 kHz = 750 Hz

We know that,

$$P = \frac{V^2}{R}$$

or

$$R = \frac{V^2}{P} = \frac{(50)^2}{75} = 33.33\ \Omega$$

$$BW = \frac{R}{2\pi L}$$

or

$$L = \frac{R}{2\pi\, BW} = \frac{33.33}{2 \times 3.14 \times 750}$$

$$L = 7.08 \times 10^{-3}\ H$$

$$L = 7.08\ mH$$

Resonant frequency $f_0 = \dfrac{1}{2\pi\sqrt{LC}}$

$$1500 = \frac{1}{2 \times 3.14\sqrt{7.08 \times 10^{-3}\ C}} = 1.56 \times 10^{-6}\ F$$

$$C = \frac{1}{(62.8 \times 1500)^2 \times 7.08 \times 10^{-3}} = 1.56\ mF$$

EXERCISES

1. Explain briefly the phenomena of electrical resonance in ac circuits.
2. What happens when resonance takes place in an ac circuit? When the frequency of the supply is varied above and below the resonant frequency, explain what happens to the power factor of the circuit?
3. Discuss the effect of varying the frequency over a wide range upon the parameters of an RLC series circuit.
4. Discuss the effect of varying the frequency upon the current drawn and the power factor in RLC series circuit.
5. Draw the phasor diagram showing the voltage drop across the various elements of series RLC circuit. Explain the term resonance as applicable to this circuit and establish a relationship between L, C and the frequency for the resonance to, take place.
6. An inductive coil of resistance 2 ohm an inductance 0.05 H is connected to the following values of capacitance of the condenser in turn: (1) 250 μF, (2) 1000 μF and (3) 3000 μF. Find in each case frequency of the supply at which current drawn by the circuit will be maximum. Determine also the current and the voltage across the condenser in each case when voltage of 230 V, 50 Hz is applied to the circuit.

Copyrighted material
Downloaded From : www.EasyEngineering.net

Downloaded From : www.EasyEngineering.net

7. What are the features of resonance in parallel circuit? Calculate the value of C which in resonance for the circuit shown below when frequency is 1,000 Hz and find Q-factor for each branch. *(U.P. Technical. University, EE-2001)*

4Ω	5Ω
J8Ω	C

8. Draw resonance curve for a series R-L-C series circuit. Locate LCF, UCF and BW.Write an expression for Q.

9. Find the half-power frequencies for R-L-C series circuit which has Q = 50 and f_0 = 50 kHz.

10. Show that the condition for resonance in a parallel R-L-C circuit is same as that in a series R-L-C circuit. State the application of resonance.

Copyrighted material
Downloaded From : www.EasyEngineering.net

Downloaded From : www.EasyEngineering.net

9

Polyphase Circuits

Introduction

Why sinusoidal function?

1. First reason is that the natural response of an under damped second-order system is a damped sinusoid, and if in losses are present it is a pure sinusoid. So sinusoid appears natural signal.
2. Second reason is that by Fourier theorem it proves that most of the useful mathematical functions of time which repeat themselves to times per second by the sum of an infinite number of sinusoidal time functions with frequency that are integral multiples of to; the given periodic function $f(t)$ can be approximated an closely as we wish by the sum of finite number of such terms. So decomposition of a periodic function in to a number of approximately chosen sinusoidal forcing function is a very powerful analytical method, for it enable us to superimpose the partial responses produced in any linear circuit by the respective sinusoidal components and thereby obtain the desired response caused by the given periodic forcing function so response to a sinusoidal forcing function is found is the dependence of other forcing function on Sinusoidal Analysis.
3. Sinusoidal function derivatives and integrals are also sinusoidal. Since the forcing response takes on the form of the forcing function, its integral and its derivatives, the sinusoidal forcing function will produce a sinusoidal forced response through out a linear circuit. The sinusoidal forcing function thus allows a much earlier mathematical analysis than does almost every other forcing function.
4. It is an easy function to generate as the most household and industry utilizes the alternating current.

The entire output of the electric power industry world made is generated and distributed as poly phase power at 50 Hz or 60 Hz frequencies. Most common poly phase system is balanced three-phase system. For special application more number of phases are used.

The system is said to be balanced when the various voltages are equal in magnitude and displaced from one another by equal angles and draws power equally from the three phases but when one of voltages is instantaneously zero the phase relationship shows that the other two must be at half amplitude. So at any instant total instantaneous power remains constant. This is an advantage for rotating machinery to keep its torque on rotor much more constant than the single-phase source were used; thereby less vibration.

There are other advantages over single-phase system

1. Size of three-phase machine is smaller than single-phase machine of same capacity.

Copyrighted material
Downloaded From : www.EasyEngineering.net

Downloaded From : www.EasyEngineering.net

2. Conductor required by three-phase transmission system is less compared to equivalent single-phase system.

Generation of a Three-Phase Supply

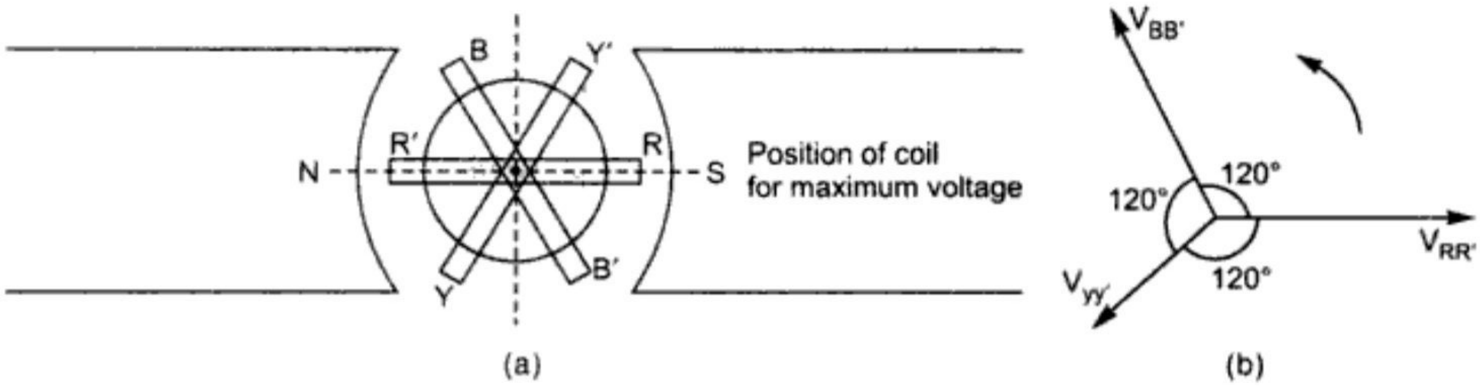

Fig. 1. *Three phase power generation.*

When three identical RR', YY' and BB' are placed 120° apart and rotated in the uniform magnetic field, a sinusoidal voltage is generated across each coil (according the Faraday's law) In the Fig. 1 shows a three-phase two pole alternator. Its three sets of coils are symmetrically mounted on a rotor such that their axes are at 120° from each other. When the rotor is rotated in the anti-clock wise direction at constant angular velocity ω radians per second a sinusoidal voltage is generated across each coil. Since the coils are rotated at the same velocity ($\omega = 2\pi f$), the generated voltages have the same frequency. Coils are identical so generated voltages be of same magnitude but phase difference of 120° between each of voltages.

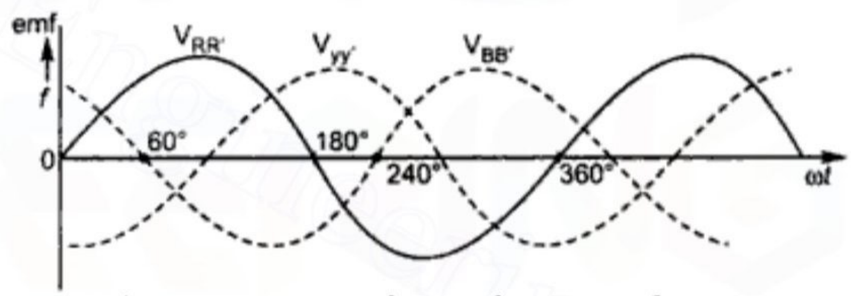

Fig. 1.(c) *Wave form of 3 – ϕ emfs.*

The generated voltages in the coils are given by

$$V_{RR'} = V_m \sin \omega t$$

$$V_{YY'} = V_m \sin (\omega t - 120°)$$

$$V_{BB'} = V_m \sin (\omega t - 240°)$$

In polar form

$$V_{RR'} = V_L 0°,\ V_{YY'} = V_L - 120°,\ V_{BB'} = V_L - 240° \text{ or } V_L 120°$$

It is seen that $V_{RR'}$ leads $V_{YY'}$ by 120° and $V_{YY'}$ leads $V_{BB'}$ by 120° also these three voltages reach their maximum positive values in the order of $V_{RR'}$, $V_{YY'}$, $V_{BB'}$.The order in which the phase voltages reach their maximum values is called phase sequence. For Fig. 1 shown coils are rotating in anticlock wise direction, the phase sequences of the rotor is rotated in clock-wise direction the voltages reach their maximum positive values in the order $V_{RR'}$, $V_{YY'}$, $V_{BB'}$ to phase sequence in RYB. Thus the phase sequence determines the direction of rotation.

Connection of Three-Phase Supplies

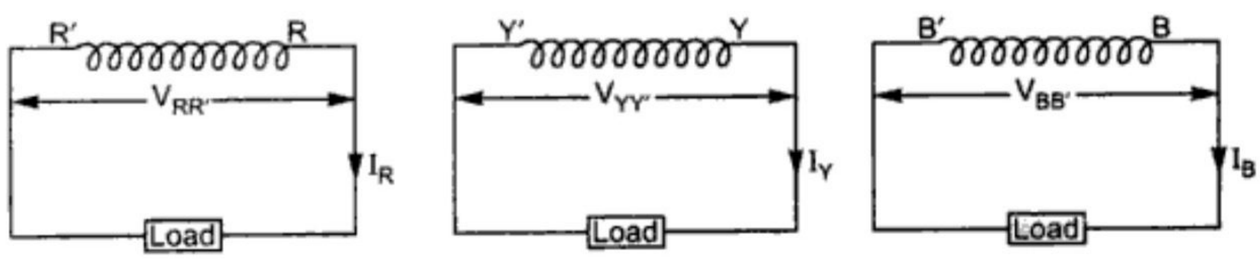

Fig. 2

Copyrighted material
Downloaded From : www.EasyEngineering.net

Downloaded From : www.EasyEngineering.net

Since voltage is generated in each coil so it would supply separate loads if isolated from each other. The arrangement is shown in the above Fig. 2.

From the above figure it requires six wires to carry energy from the coils to the loads. This is equivalent to three separate single phase system such system is called a three phase, six wire system if the coils are interconnected properly the number of connecting wires may be reduced. There are two methods of interconnection *i.e.* star and delta connections. It is preferred that the algebraic sum of ordinates of e.m.f. wave shapes of the three phases is always zero, irrespective of the position of the ordinates. Hence the sum of instantaneous values of e.m.f. in a three phase system is always zero. *i.e.*

$$V_{RR'} + V_{YY'} + V_{BB'} = 0$$

$$V_{RR'} + V_{YY'} + V_{BB'} = V_m \sin\theta + V_m \sin(\theta - 120°) + V_m \sin(\theta - 240°)$$

$$= V_m [\sin\theta + \sin(\theta - 120°) + \sin(\theta - 240°)]$$

$$= V_m [\sin\theta + \sin\theta \cos 120° - \cos\theta \sin 120° + \sin\theta \cos 240° - \cos\theta \sin 240°]$$

$$= V_m \left[\sin\theta + \sin\theta\left(-\frac{1}{2}\right) - \cos\theta\left(\sqrt{\frac{3}{2}}\right) + \sin\theta\left(-\frac{1}{2}\right) - \cos\theta\left(\sqrt{\frac{3}{2}}\right)\right]$$

$$= V_m \left[\sin\theta - \frac{1}{2}\sin\theta - \frac{1}{2}\sin\theta\right] = 0$$

Similarly for currents flowing through the three phase circuit.

Star (γ) CONNECTION

In star connection R′Y′B′ are connected together to form a common point N while R, Y and B to external circuit though three conductors called lines. The point N is called neutral or star point. A wire brought out form star point is called neutral wire. The three line conductors and a neutral wire system is called three phase four wire system. While three line conductors is called three-phase system. The neutral point is connected to ground; Fig. 3.

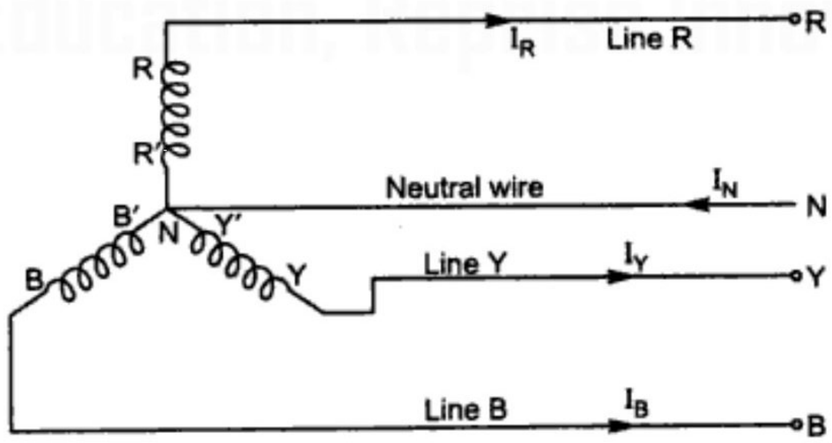

Fig. 3 *Star connection.*

Delta (Δ) Connection

If three isolated coils are connected to form a closed delta by starting end of one phase being joined the finishing end of another phase as shown in Fig. 4.

Հեղինակային իրավունքով պաշտպանված նյութ
Downloaded From : www.EasyEngineering.net

Downloaded From : www.EasyEngineering.net

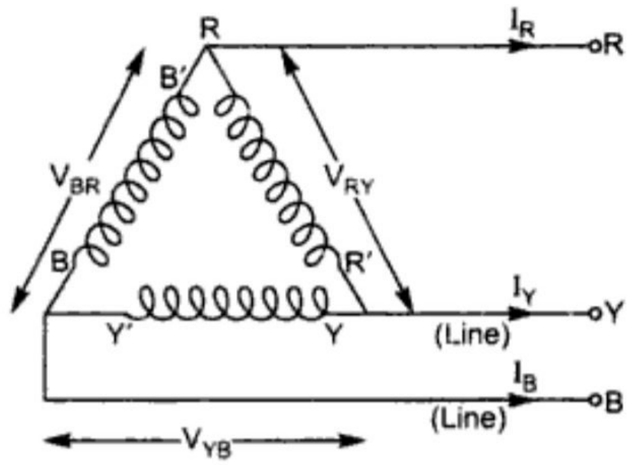

Fig. 4. *Delta connection.*

As earlier shown that algebraic summation of V_{RY}, V_{YB} and V_{BR} is zero so there will not be circulating current in the mesh.

Line and Phase Voltage and Current in Star Connection

The voltage between two lines is called the line-to-line voltage or simply the line voltage. The line voltages are V_{RY}, V_{YB}, V_{BR} between the pairs of lines R-Y, Y-B and B-R respectively. In a symmetrical system these voltages are equal in magnitude and each is designated as V_L

$$|V_{RY}| = |V_{YB}| = |V_{BR}| = V_L$$

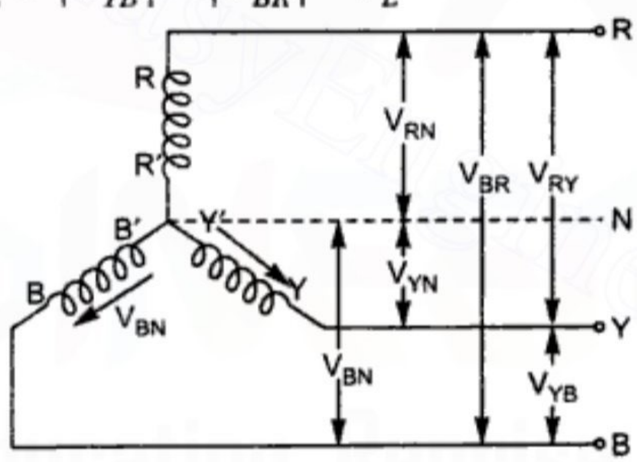

Fig. 5. *Star connection-showing line and phase voltage.*

The voltage between each line and neutral is called the phase voltage (V_{Ph}). The three-phase voltages are V_{RN}, V_{YN} and V_{BN} .In symmetrical system these voltages are equal in magnitude

$$|V_{RN}| = |V_{XN}| = |V_{BN}| = V_{Ph}$$

$$V_{RN} = V_{Ph} \angle 0°$$

$$V_{XN} = V_{Ph} \angle -120°$$

$$V_{BN} = V_{Ph} \angle +120°$$

Line voltage $$V_{YB} = V_{YN} - V_{BN} = 2V_{YN} \cos 30°$$

$$= 2V_{Ph}\left(\sqrt{\frac{3}{2}}\right) = \sqrt{3}\, V_{Ph}$$

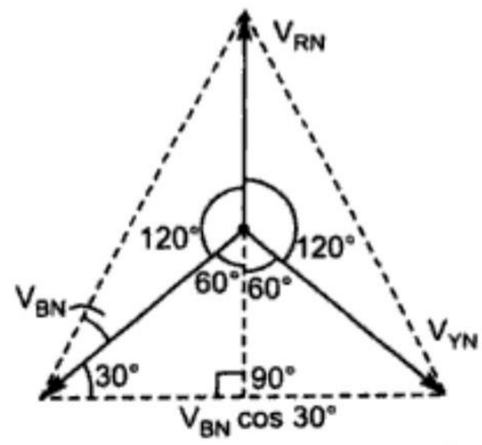

Fig. 6. *Star connection phasor diagram.*

Հեղինակային իրավունքով պաշտպանված նյութ
Downloaded From : www.EasyEngineering.net

Downloaded From : www.EasyEngineering.net

Similarly, line voltage

$$V_{BR} = V_{BN} - V_{RN}$$
$$= 2V_{BR}\cos 30°$$
$$= 2V_{Ph}\left(\sqrt{\frac{3}{2}}\right) = \sqrt{3}\,V_{Ph}$$

Line voltage $\quad V_{RY} = V_{RN} - V_{YN}$

$$= 2V_{RN}\cos 30° = \sqrt{3}\,V_{Ph}$$

Hence in star–connected 3-phase system line voltage $V_L = \sqrt{3}$. Phase voltage (V_{Ph}).

While, the current in the line is equal to the phase current.

Hence in star connection

$$V_L = \sqrt{3}\,V_{Ph}$$
$$I_L = I_{Ph}$$

The angle between the line currents and the corresponding line voltage is $(30 + \phi)$ the case of lagging load and $(30 - \phi)$, in case of leading loads.

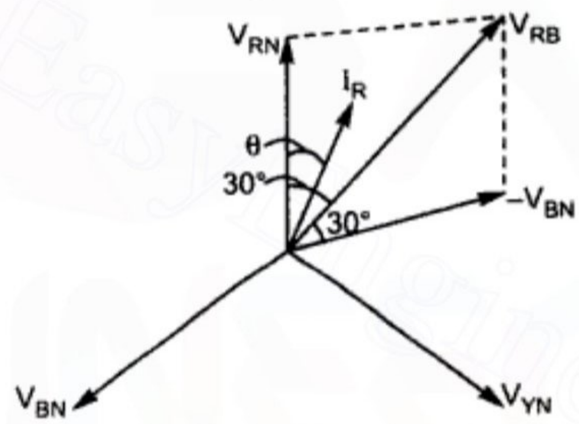

Fig. 7. *Showing angle of lead or lag between voltage and current.*

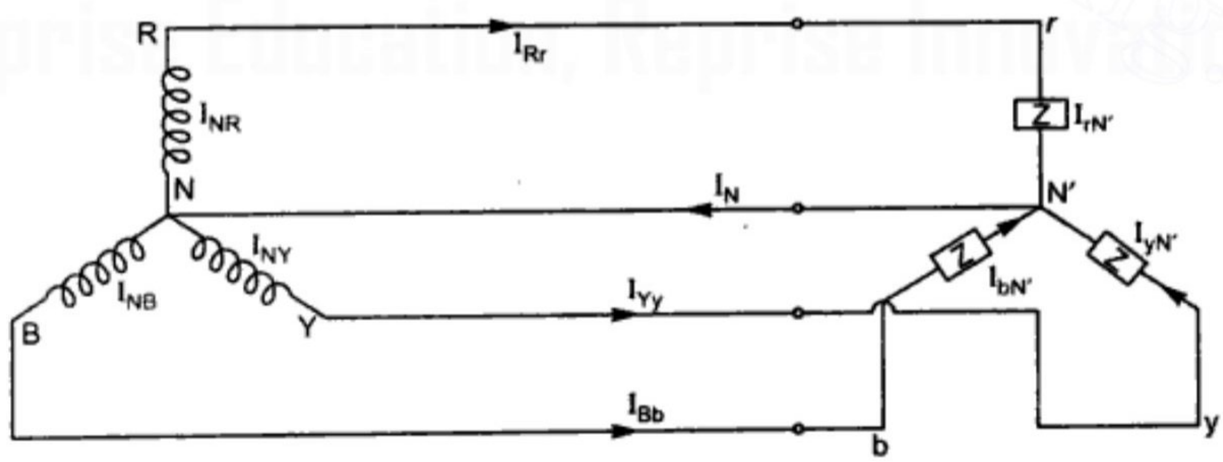

Fig. 8. *Three-phase, four wire supply system.*

So

$$I_{NR} = I_{Rr} = I_{rN'}$$
$$I_{NY} = I_{Yy} = I_{yN'}$$
$$I_{NB} = I_{Bb} = I_{BN'}$$

Հեղինակային իրավունքով պաշտպանված նյութ
Downloaded From : www.EasyEngineering.net

Downloaded From : www.EasyEngineering.net

Line current is same as phase current both in magnitude and phase.

$$I_L = I_{Ph}$$

Neutral Current

Each impedance is connected between a line and neutral. This equivalent to three-phase circuits.

The line currents are given by

$$I_{Rr} = \frac{V_{RN}}{Z},\ I_{Yy} = \frac{V_{YN}}{Z},\ I_{Bb} = \frac{V_{BN}}{Z}$$

Let the load is inductive

$$Z = |Z_{Ph}| \angle \phi$$

We have,

$$V_{RN} = V_{Ph} \angle 0°$$

$$V_{YN} = V_{Ph} \angle -120°$$

$$V_{BN} = V_{Ph} \angle 240° \text{ or } V_{Pn} \llcorner +120°$$

So

$$I_{Rr} = V_{Ph} \angle 0° / Z_{Pn} \phi$$

$$I_{Yy} = V_{Ph} \angle -120° / Z_{Ph} \angle \phi = V_{Ph}/Z_{Ph} \angle -120° - \phi$$

$$I_{Bb} = V_{Ph} \angle 120° / Z_{Ph} \angle \phi = V_{Ph}/Z_{Ph} \angle 120° - \phi$$

Magnitude of each line current is same and phase is 120° apart from each other. Since the line currents form a balanced system, so the phasor sum of the current must be zero.

By, KCL at neutral point N'

$$I_N = I_{Rr} + I_{Yy} + I_{Bb} = 0 \text{ [balanced system]}$$

Line and Phase Voltages and current in Delta Connected

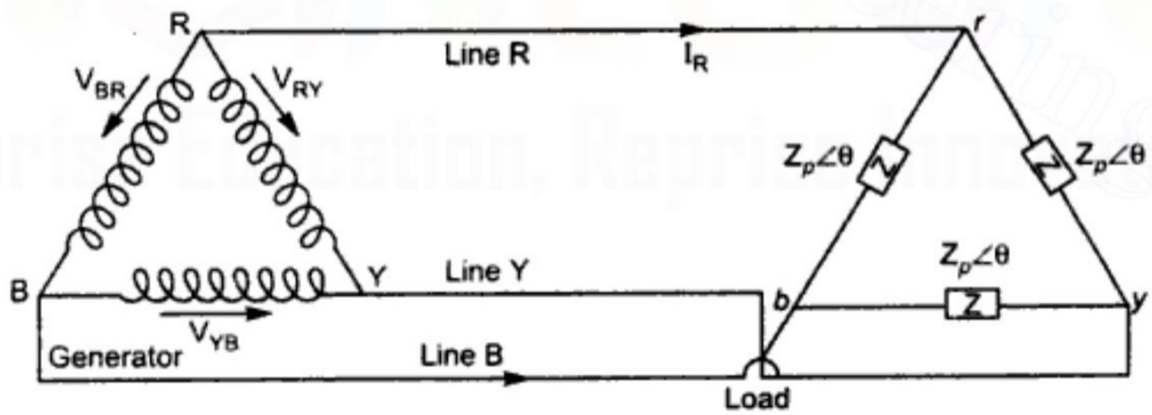

Fig. 9. *Delta connection, showing line and phase quantity.*

The voltage between any two lines is the line voltage V_L. In delta connection the phase coils are connected between lines. Therefore the phase voltage is equal to the line voltage.

$$|V_{RY}| = |V_{YB}| = |V_{BR}| = V_L = V_{Ph}$$

Phase and Line Currents in Delta Connection

If V_{RY} is considered as the reference voltage.

The phase current and can be found as

Հեղինակային իրավունքով պաշտպանված նյութ
Downloaded From : www.EasyEngineering.net

Downloaded From : www.EasyEngineering.net

$$I_{RY} = V_{RY}/Z_{Ph} = V_L \angle 0°/Z_{Ph} \angle \phi = V_L/Z_{Ph} \angle -\phi$$
$$I_{YB} = V_{YB}/Z = V_L \angle -120°/Z_{Ph} \angle \phi = V_L/Z_{Ph} \angle -120 - \phi$$
$$I_{BY} = V_{BY}/Z = V_l \angle 120°/Z_{Ph} \angle \phi = V_L/Z_{Ph}\ \phi \angle 120 - \phi$$

The three phase currents therefore have equal magnitudes

$I_{Ph} = V_L/Z_{Ph}$ and separated by 120° phase angle.

Line current

$$I_R = I_{ry} - I_{br} = 2\ I_{Ph} \cos 30° = \sqrt{3}\ I_{Ph}$$
$$I_Y = I_{yb} - I_{ry} = 2I_{Ph} \cos 30° = \sqrt{3}\ I_{Ph}$$
$$I_B = I_{br} - I_{yb} = 2I_{Ph} \cos 30° = \sqrt{3}\ I_{Ph}$$

Volt-Amperes, Power and Reactive Volt-Amperes in Three Phase System

Volt-Amperes. In single-phase volt-amperes is given by the expression:

$$S_{1-\phi} = V.I \text{ volt amp}$$

In three phase whether balanced or unbalanced is given by sum of the volt-amperes in each phase.

If the load is balanced, total volt-ampere will be three times of volt-ampere per phase.

$$S_{3-\phi} = 3V_{Ph}I_{Ph} \text{ volt-amperes}$$

Where, V_{Ph} and I_{ph} are the rms phase voltage and rms phase current.

In term of line values for star connection

$$V_{Ph} = \frac{V_L}{\sqrt{3}} \text{ and } I_{Ph} = I_L$$

$$S_{3-\phi} = 3V_{ph}\ I_{Ph} = 3.\left(\frac{V_L}{\sqrt{3}}\right).I_L = \sqrt{3}\ V_L I_L \text{ in VA.}$$

For delta connected system

$$V_{Ph} = V_L \text{ and } I_{Ph} = \frac{I_L}{\sqrt{3}}$$

$$S_{3-\phi} = 3V_{Ph}\ I_{Ph} = \frac{3V_L.I_L}{\sqrt{3}} = \sqrt{3}\ V_L I_L \text{ in VA}$$

Hence for both star and delta connection

$$S_{3-\phi} = \sqrt{3}\ V_L I_L \text{ VA.}$$

Activre Power

In single phase

$$P_{1-\phi} = V.I \cos \phi \text{ W}$$

Power consumed by a three-phase load, whether balanced or unbalanced is equal to the sum of the power of each phase. For balanced load the total power is equal to three times the power per phase

مادة محمية بموجب حقوق النشر
Downloaded From : www.EasyEngineering.net

Downloaded From : www.EasyEngineering.net

$$P_{3-\phi} = 3P_{1-\phi} = 3V_P I_P \cos\phi \text{ W}$$

In terms of line values for both star and delta connection

$$P_{3-\phi} = \sqrt{3}\, V_L I_L \cos\phi \text{ W}$$

Reactive Power

In a single phase circuits are given by

$$Q_{I-\phi} = V.I \sin\phi \text{ VA.}$$

Reactive power of three-phase load either balanced or unbalanced are equal to the sum of reactive volt-amperes of each phase.

$$Q_{3-\phi} = 3V_P I_P \sin\phi \text{ Var.}$$

In term of line values for star and delta connections

$$Q_{3-\phi} = \sqrt{3}\, V_L I_L \sin\phi \text{ Var.}$$

Measurement of Power

1. Measurement of power by single-wattmeter method

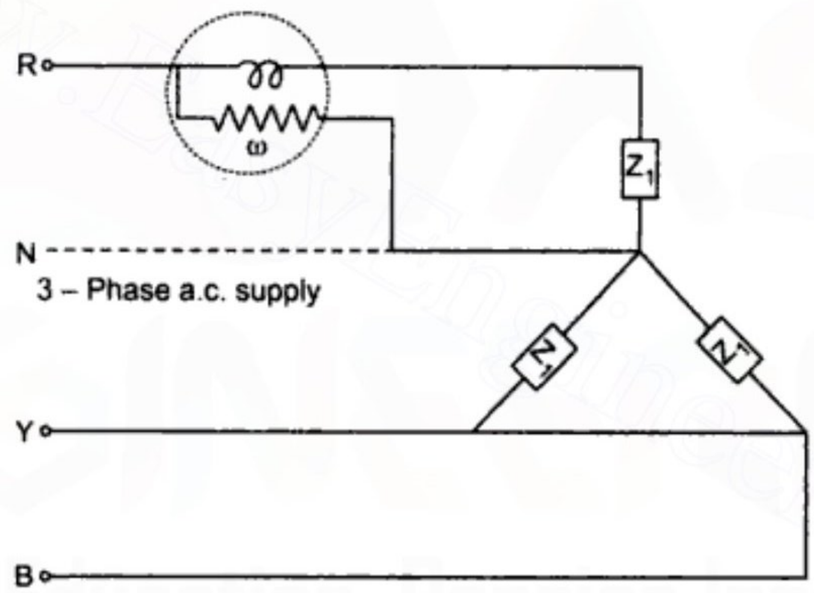

Fig. 10. *Circuit diagram of power by single wattmeter.*

If the load on each phase is balanced then the power consumed by load can be measured with the help of only single wattmeter with its current coil in one line and the pressure coil between the line and the neutral point in Fig. 10. The reading of wattmeter thus connected, gives the power per phase. So

$$\text{Total power} = 3 \times \text{power per phase}$$
$$= 3 \times \text{wattmeter reading.}$$

2. Measurement of power by two-wattmeter method

By two-wattmeter method power can be measured whether the load is balanced or unbalanced. The load may be star or delta connection form. The currents coils of the two wattmeter's are connected in any of two lines and the pressure coils are connected between these lines and third line as shown in Fig. 11.

Copyrighted material
Downloaded From : www.EasyEngineering.net

Downloaded From : www.EasyEngineering.net

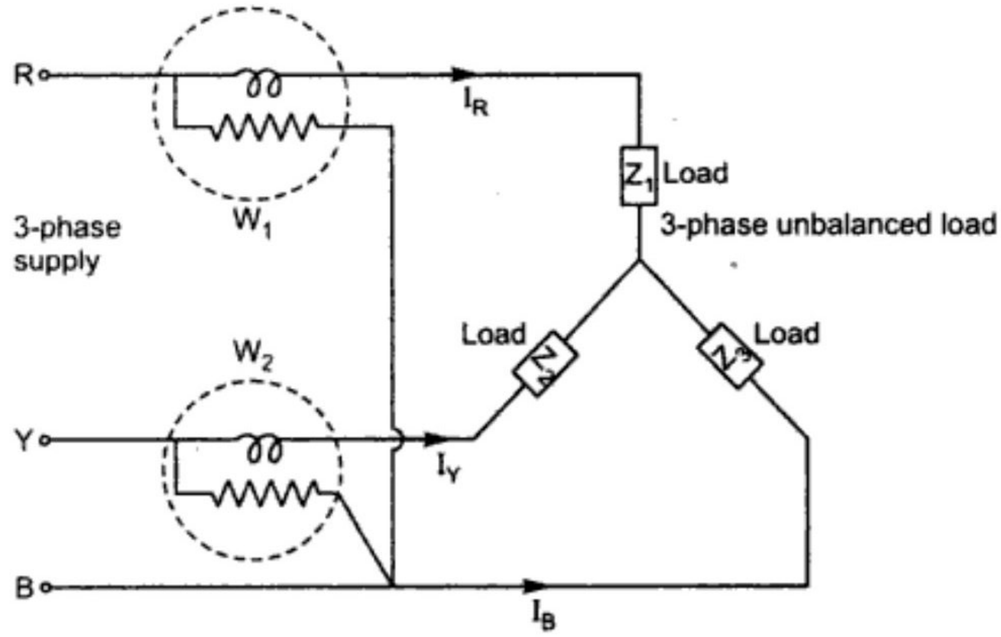

Fig. 11 *(a) Circuit diagram of power by two wattmeter.*

Let V_{RN}, V_{YN} and V_{BN} be the voltages across the three phases of the load and I_R, I_Y and I_B the currents flowing in the three lines.

Total instantaneous power in the load $= V_{RN} I_R + V_{YN} I_Y + V_{BN} I_B$

Instantaneous current through the current coil of the wattmeter, $W_1 = I_R$

Instantaneous voltage across the pressure coil of wattmeter W_1

$$V_{RB} = V_{RN} - V_{BN}$$

Instantaneous power measured by Wattmeter W_1

$$= I_R (V_{RN} - V_{BN}) = I_R V_{RB}$$

Instantaneous current through the current coil of the wattmeter, $W_2 = I_Y$

Instantaneous voltage across the pressure coil of wattmeter W_2

$$V_{YB} = V_{YN} - V_{BN}$$

Instantaneous power measured by wattmeter W_2

$$= I_Y (V_{YN} - V_{BN})$$

$$= I_Y V_{YB}$$

Total instantaneous power $= V_{RN} I_R + V_{YN} I_Y + V_{BN} I_B$

By KCL

$$I_R + I_Y + I_B = 0$$

or

$$I_B = -(I_R + I_Y)$$

Putting the values of I_B in equation

Total instantaneous power $= V_{RN} I_R + V_{YN} I_Y + V_{BN} I_B$

$$= V_{RN} I_R + V_{YN} I_Y + V_{BN} (-I_R - I_Y)$$

$$= I_R (V_{RN} - V_{BN}) + I_Y (V_{YN} - V_{BN})$$

= Instantaneous power measured by W_1 + Instantaneous power measured by W_2

Copyrighted material
Downloaded From : www.EasyEngineering.net

Downloaded From : www.EasyEngineering.net

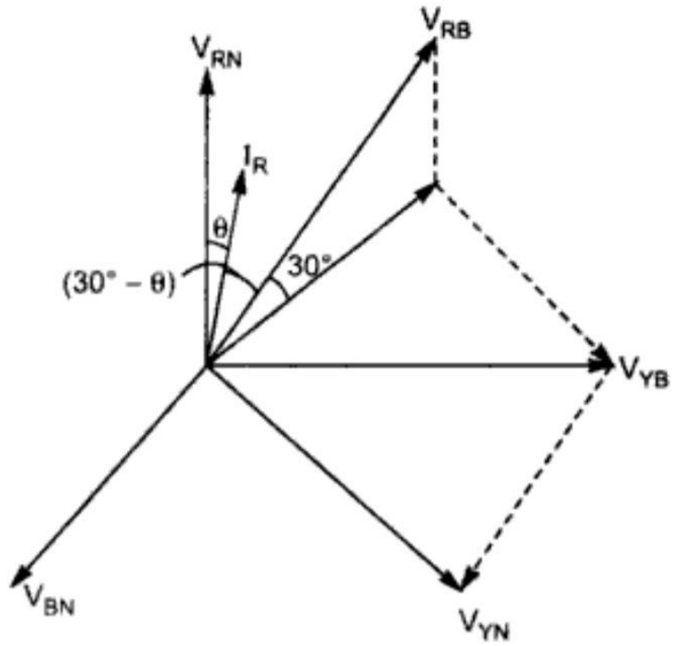

Fig. 11. *(b) Phasor diagram of measurment of power.*

So at any instant power measured by two-wattmeter is equal to total power consumed in load. This is valid for whether load is balanced or unbalanced.

The readings of the two wattmeters are

$$W_1 = \sqrt{3}\, V_L.I_L \cos(30 - \phi)$$
$$= \sqrt{3}\, V_L.I_L \cos(30 - 60) = \sqrt{3}\, V_L.I_L \cos 30°$$
$$= \frac{3V_L.I_L}{2}$$
$$W_2 = \sqrt{3}\; V_L.I_L \cos(30 + \phi)$$
$$= \sqrt{3}\, V_L.I_L \cos(30 + 60) = \sqrt{3}\, V_L.I_L \cos 90° = 0$$

So $$W = W_1 + W_2 = \frac{3V_L.I_L}{2}$$

Hence when the power factor is 0.5 one of wattmeter reads zero while other measures total power.

3. When power factor is zero. We have $\phi = 90°$

$$W_1 = \sqrt{3}\, V_L.I_L \cos(30 - \phi)$$
$$= \sqrt{3}\, V_L.I_L \cos(30 - 90) = \frac{\sqrt{3}V_L.I_L}{2}$$
$$= \frac{\sqrt{3}V_L.I_L}{2}$$
$$W_2 = \sqrt{3}\; V_L.I_L \cos(30 + 90) = \sqrt{3}\, V_L.I_L \cos 120 = \sqrt{3}\, V_L.I_L\left(-\frac{1}{2}\right)$$
$$= -\frac{\sqrt{3}}{2} V_L.I_L$$

Total power $$W = W_1 + W_2 = 0$$

Copyrighted material
Downloaded From : www.EasyEngineering.net

Downloaded From : www.EasyEngineering.net

Therefore, with zero power factor, the reading of two wattmeters are equal but of opposite sign.

4. If the power factor is below 0.5, one of wattmeters will give negative indication. So to read the wattmeter, we must either reverse the current coil or pressure coil connections. The wattmeters will give positive reading but this must be taken as negative for calculating the total power.

SOLVED NUMERICAL PROBLEMS

Example 1: *Three impedances each having a resistance of 20 Ω and an inductive reactance of 18 Ω are connected in star across a 400 V, three phase supply. Calculate (i) the line current (ii) the power factor (iii) total power in kW.*

Solution : Resistance / Phase $R_F = 20\,\Omega$

Reactance/Phase $X = 18\,\Omega$

$V_L = 400\,V$

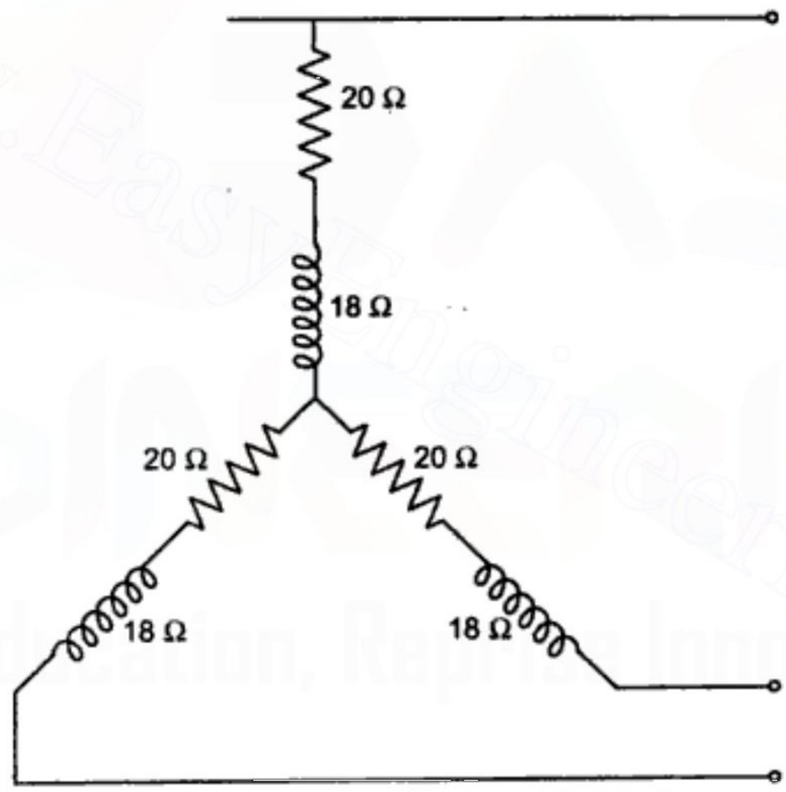

Star connected system

Phase voltage $V_P = \dfrac{V_L}{\sqrt{3}} = \dfrac{400}{\sqrt{3}} = 231\ V$

Impedance/Phase $= \sqrt{R^2 + X^2}$

$$Z_P = \sqrt{(20)^2 + (18)^2} = 26.91\ \Omega$$

(*i*) Line current for star connection $I_L = I_P$

$$= \frac{V_P}{Z_P} = \frac{231}{26.91} = 8.58 \text{ amp}$$

Copyrighted material
Downloaded From : www.EasyEngineering.net

Downloaded From : www.EasyEngineering.net

(*ii*) Power factor $\cos\phi = \dfrac{R}{Z} = \dfrac{20}{26.91} = 0.74$ lagging

(*iii*) Total power

$$P = \sqrt{3}\, V_L I_L \cos\phi$$

$$= \sqrt{3} \times 400 \times 8.58 \times 0.74 = 4.42 \text{ kW}.$$

Example 2: *A 220 V, three phase voltage is applied to a balanced delta connected three-phase load by phase impedance (4 + j5) Ω.*

(i) Find the line current in each line.

(ii) What is the power consumed per phase?

(iii) What is the phaser sum of the three-line currents why does it have this value?

Solution : For delta connected system $V_L = V_P$

$$V_L = V_P = 220 \text{ V}$$

$$Z_P = (4 + j5)$$

$$= 6.4 \angle 51.34°$$

Phase current $\quad I_P = \dfrac{V_P}{Z_P} = \dfrac{220}{6.4} = 34.38$ amp

(*i*) Line current $I_L = \sqrt{3}\, I_P = \sqrt{3} \times 34.38 = 59.54$ amp.

(*ii*) Power consumed $P = I_P^2 R_P = (34.38)^2 \times 4 = 4.73$ kW/Phase.

(*iii*) Phasor Sum.

The phasor sum of the three line currents will be zero because the line currents are equal in magnitude and have a mutual phase difference of 120°.

Example 3: *A three-phase 200 kW, 50 Hz, delta-connected induction motor is supplied from 3-phase, 400 V, 50 Hz supply system. The efficiency and the power factor of 3-phase induction motor are 90% and 0.85 respectively. Calculate (i) current in each motor phase (ii) the line current (iii) active and reactive components of phase currents.*

Solution :

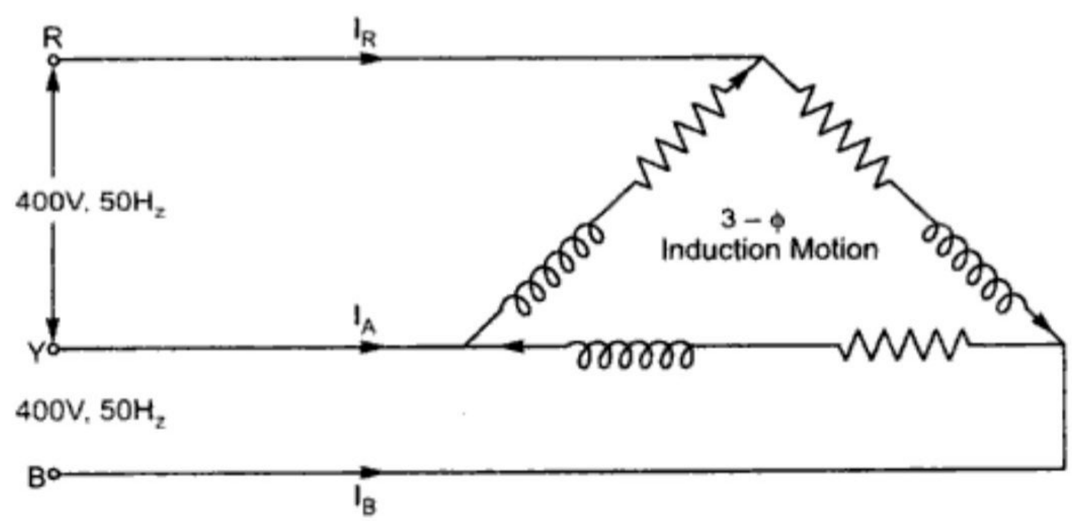

Phase delta connected induction motor.

Copyrighted material
Downloaded From : www.EasyEngineering.net

Downloaded From : www.EasyEngineering.net

(*i*) Line voltage $V_L = 400$ V

Voltage across the motor phase, V_{Ph} = line voltage, V_L

$= 400$ V

Output of three-phase I.M. $= 200$ kW

Input to the motor $= \dfrac{\text{Output}}{\text{Efficiency}} = \dfrac{200 \times 10^3}{0.90}$

$= 222222.22$ W

Input to the motor $= 3\, V_{Ph}\, I_{Ph} \cos \phi$

$222222 = 3 \times 400 \times I_{Ph} \times 0.85$

$I_{Ph} = 217.86$ amp

Current drawn by each phase would be same in magnitude.

(*ii*) Line current,

$$I_L = \sqrt{3} I_{Ph}$$

$$= \sqrt{3} \times 217.86$$

$$= 377.35 \text{ amp.}$$

(*iii*) Active component of phase current $= I_{Ph} \cos \phi$

$= 217.86 \times 0.85$

$= 185.18$ amp

Reactive component of phase current $= I_{Ph} \sin \phi$

$= 217.86 \times 0.53$

$= 114.76$ amp

Example 4: *A balanced three-phase star connected load of 100 kW takes a leading current of 75 amp, when connected across a 3-phase, 1.1 kV, 50 Hz supply. Find the circuit constants of the load per phase.*

Solution : Line voltage across the load, $V_L = 1.1$ kV $= 1100$ V

Phase voltage, $V_{Ph} = \dfrac{1100}{\sqrt{3}} = 635$ V

Current takes by the load $= 75$ amp

For star connection, $I_{Ph} = I_L$

Thus phase current, $I_{Ph} = 75$ amp

Impedance per phase, $Z_{Ph} = \dfrac{V_{Ph}}{I_{Ph}}$

$= \dfrac{635}{75} = 8.47\ \Omega$

Total power drawn by the load $= 100$ kW

$= 100 \times 10^3\ \Omega$

$$P = \sqrt{3}\, V_L \,.\, I_L \cos \phi$$

$$100 \times 10^3 = \sqrt{3} \times 1100 \times 75 \times \cos \phi$$

Bahan dengan hak cipta
Downloaded From : www.EasyEngineering.net

Downloaded From : www.EasyEngineering.net

Phase voltage $V_P = \frac{V_L}{\sqrt{3}} = \frac{400}{\sqrt{3}} = 231$ V

Current in R-phase, $I_R = \frac{2 \times 10^3}{231} = 8.61$ amp

Current in Y-phase, $I_Y = \frac{3 \times 10^3}{231} = 12.99$ amp

Current in B-phase, $I_B = \frac{4 \times 10^3}{231} = 17.30$ amp

(*ii*) All the loads are resistive in nature, therefore power factor will be unity *i.e.*, current in phase with respective voltage. Assuming D.C. phase sequence RZB,

$$I_R = 8.65\angle 0°$$
$$= (8.65 + j0°) \text{ amp}$$
$$I_Z = 12.99\angle -120°$$
$$= (-6.50 - j11.25) \text{ amp}$$
$$I_B = 17.30\angle -240°$$
$$= (-8.65 + j14.98) \text{ amp}$$

Current in the neutral conductor

$$I_N = I_R + I_Z + I_B$$
$$= 8.65 - 6.50 - j11.25 - 8.65 + j14.98$$
$$= -6.50 + j3.73$$
$$I_N = 7.49\angle 150°.$$

Example 6: *The power input to a three-phase induction motor is read by two wattmeters. The readings are 1000 W and 500 W respectively. Calculate the power factor of the motor.*

Solution : $W_1 = 500$ W, $W_2 = 1000$ W

We know that,

$$\tan\phi = \frac{\sqrt{3}\,(W_2 - W_1)}{W_2 + W_1} = \frac{\sqrt{3}\,(1000 - 500)}{1000 + 500}$$
$$\tan\phi = 0.577$$
$$\phi = \tan^{-1}(0.577)$$
$$\phi = 30°$$
$$\cos\phi = \cos 30°$$
$$\cos\phi = 0.866$$

P.f. of the motor $= \cos\phi = 0.866.$

Example 7: *In the three-phase circuit power measured by two wattmeter gives 16.2 kW and – 8.2 kW. The line voltage was 400 V. Determine (i) total active power drawn by the load ; (ii) power factor ; and (iii) line current.*

Solution : $W_2 = 16.2$ kW, $W_1 = -8.2$ kW, $V_L = 400$ V

Bahan dengan hak cipta
Downloaded From : www.EasyEngineering.net

Downloaded From : www.EasyEngineering.net

(*i*) Total Active Power,

$$P = W_2 + W_1 = 16.2 - 8.2 = 8.0 \text{ kW}$$

(*ii*) Power factor,

$$\tan\phi = \frac{\sqrt{3}\,(W_2 - W_1)}{W_2 + W_1} = \frac{\sqrt{3}\,(16.2 + 8.2)}{16.2 - 8.2} = 5.283$$

$$\phi = \tan^{-1}(5.283)$$

$$\phi = 79.28$$

$$\cos\phi = \cos 79.28 = 0.186 \text{ lagging.}$$

(*iii*) Line current, $P = \sqrt{3}\, V_L \,.\, I_L \cos\phi$

$$8 \times 10^3 = \sqrt{3} \times 400 \times I_L \times 0.186$$

$$I_L = \frac{8 \times 10^3}{128.86} = 62.08 \text{ amp.}$$

Example 8: *A balanced star connected load is supplied from a symmetrical, 3-phase, 440 V, 50 Hz supply system the current in each phase is 15 A and lags behind its phase voltage by an angle of 36°. Calculate (i) Phase voltage (ii) load parameters, (iii) total power and (iv) readings of two wattmeters, connected in the load circuit to measure the total power.*

Solution :

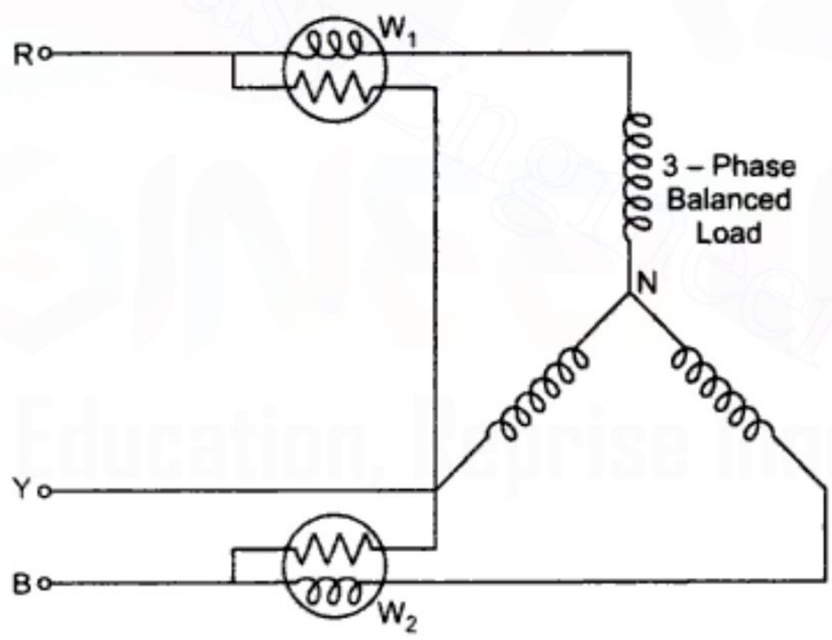

Two-wattmeter connections

(*i*) Line voltage, $V_L = 440$ V

Phase voltage in star connected Ckt $V_{Ph} = \dfrac{V_L}{\sqrt{3}}$

$$= \frac{440}{\sqrt{3}} = 254 \text{ Volt.}$$

(*ii*) Current in each phase = 15 A

Impedance of the load per phase.

Material com direitos autorais
Downloaded From : www.EasyEngineering.net

Downloaded From : www.EasyEngineering.net

$$Z_{Ph} = \frac{V_{Ph}}{I_{Ph}} = \frac{254}{15} = 16.93\ \Omega$$

$$Z_{Ph} = \sqrt{R^2 + X^2} = 16.93\ \Omega$$

Current in each phase lags by its voltage 36°.

Hence, $\tan 36° = \frac{X}{R}$

$$X = R \tan 36° = 0.726\ R$$

Substituting the value of X in equation,

$$R^2 + (0.726\ R)^2 = (16.93)^2$$

$$1.52\ R^2 = (16.93)^2$$

$$R = \frac{16.93}{\sqrt{7.52}} = 13.73\ \Omega$$

So, $X = 0.726\ R = 0.726 \times 13.73$

$$X = 9.97\ \Omega$$

(*iii*) Power consumed by each phase $= V_{Ph} \cdot I_{Ph} \cos \phi$

$$= 254 \times 15 \times \cos 36°$$

$$= 3082.35\ W$$

$$= 3.08\ kW$$

So, total power $= 3 \times P_{Ph}$

$$= 3 \times 3.08$$

$$= 9.24\ kW$$

(*iv*) Total power $= W_1 + W_2$ (reading of two wattmeters)

Thus, $W_1 + W_2 = 9.24\ kW$

$$\tan 36° = \frac{\sqrt{3}\,(W_2 - W_1)}{W_2 + W_1}$$

$$W_2 - W_1 = \frac{9.24 \times 10^3 \times 0.726}{\sqrt{3}}$$

$$W_2 - W_1 = 3873\ W$$

$$W_2 + W_1 = 9.24$$

$$W_2 - W_1 = 3.87$$

So, solving these equations

$$W_1 = 2.69\ kW$$

$$W_2 = 6.56\ kW$$

Example 9: *Two wattmeters connected to read the total power in a three-phase system supplying a balanced load of 12 kW and – 3 kW, respectively. Calculate the total power and power factor. Also explain the significance of (i) equal wattmeter readings, and (ii) A zero reading on one wattmeter.*

Solution : $W_2 = 12\ kW$, $W_1 = -3kW$

Material com direitos autorais
Downloaded From : www.EasyEngineering.net

Downloaded From : www.EasyEngineering.net

Total power $W = W_1 + W_2$

$= -3 + 12 = 9$ kW

$$\tan\phi = \frac{\sqrt{3}\,(W_2 - W_1)}{W_2 + W_1} = \frac{\sqrt{3}\,(12+3)}{12-3} = \frac{\sqrt{3}\times 15}{9}$$

$\tan\phi = 2.89$

$\phi = \tan^{-1}(2.89) = 70.89°$

Power factor, $\cos\phi = \cos 70.89° = 0.33.$

(*i*) Equal wattmeter reading cases :

For reading of the two wattmeters to be equal,

$$\sqrt{3}\,V_L\,.\,I_L\cos(30-\phi) = \sqrt{3}\,V_L\,.\,I_L\cos(30+\phi)$$

$$\cos(30-\phi) = \cos(30+\phi)$$

or $\theta = 0°$

$\cos\phi = 1.0$

This suggest unity power factor, *i.e.*, readings of two wattmeters are equal.

(*ii*) Zero reading on one wattmeter

As reading of wattmeters are

$$W_2 = \sqrt{3}\,V_L\,.\,I_L\cos(30-\phi)$$

$$W_1 = \sqrt{3}\,V_L\,.\,I_L\cos(30+\phi)$$

For zero reading on one of the wattmeter, ϕ must be 60°, which makes

$$W_1 = \sqrt{3}\,V_L\,.\,I_L\cos 90° = 0.$$

EXERCISES

1. Deduce the relationship between the phase and the line voltages in a three phase star connected circuit.
2. Derive an expression for the total power input for a balanced three-phase load in terms of line voltage, line current and power factor.
3. Show that the power intake by a three-phase circuit can be measured by two wattmeters connected properly in a circuit.
4. Draw suitable phasor diagram to explain the significance of (*i*) equal wattmeters readings (*ii*) zero reading on one wattmeters.
5. Each phase of a 3-phase, Δ-connected load consists of an impedance $Z = 10\angle 60°$ ohm. The line voltage is 440 volts at 50 Hz. Compute the total power.
6. Each phase of a 3-phase, star-connected load consists of an impedance $Z = 10\angle 60°$ ohm. The line voltage is 440 volts at 50 Hz. Compute the total power.
7. Three identical impedances are connected in delta to a three-phase supply of 415 V 50 Hz; the line current is 25 amps. The total power taken from the supply is 10 kW. Calculate the resistance and inductance of the impedances.

Copyrighted material
Downloaded From : www.EasyEngineering.net

Downloaded From : www.EasyEngineering.net

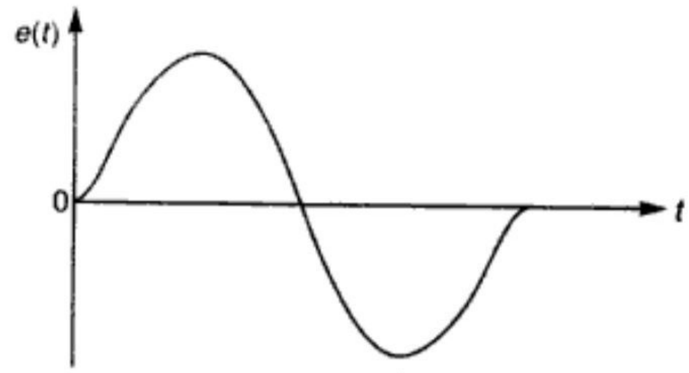

Fig. 1. *Continuous signal.*

The instrumental working on analog mode of operation is known as analog instruments. The analog instruments are those type of instruments in which the quantity under measurement is expressed by the deflection of pointer the instrument.

Digital Mode

The signals, which are used in the digital mode of operation, are discrete in nature *i.e.* discontinuous in the form of pulses. These signals vary in discrete steps and thus take up only finite different values in a given range.

The instruments working in digital mode of operation is known as digital instruments are those instruments in which the quantity under measurement is expressed in decimal number.

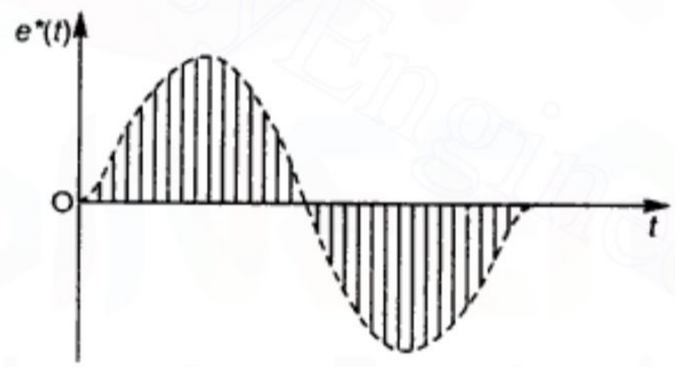

Fig. 2. *Discrete signal.*

The analog instruments are three types

(*i*) Indicating Instrument

(*ii*) Integrating Instrument

(*iii*) Recording Instruments

Indicating Instruments: Indicating instruments are the types of instrument in which the values of quantity under measurement are measured by the deflection of the pointer on a graduated scale. For example ammeter, voltmeter, wattmeter etc.

Integrating Instruments: Integrating instruments are those instrument which gives the values of quantity under measurment in a specified duration of time total, amount of electrical energy (kwh) supplied to a circuit in a specified duration of time. Energy meter, Ampere hour meter is the best example of integrating instrument it gives.

Recording Instruments: Recording instruments are those instruments, which gives a continuous record of the variation of the quantity under measurement. For example current, voltage and power over specified period of time. The moving part of the instrument carries an

Copyrighted material
Downloaded From : www.EasyEngineering.net

Downloaded From : www.EasyEngineering.net

inked pen, which rests lightly on a chart or graph sheet carried by a revolving drum. The drum moves at uniform speed in direction perpendicular to the direction of the deflection of the moving part (pen) the path traced out on the chart or graph sheet by pen gives the continuous variations in the quantity being recorded. For example, X-Y plotter.

Classification of Instruments

Indicating instruments are of the following types:

(*i*) Moving iron instrument
(*ii*) Moving coil instrument
(*iii*) Dynamometer type instrument
(*iv*) Hot wire type instrument
(*v*) Electrostatic type instrument
(*vi*) Induction type instrument

All such instrument essentially consists of a pointer moving over a calibrated scale and attached to the moving system pivoted in jewel bearings. In order to ensure the proper operation of indicating instruments.

Torque in Instruments

(*i*) Deflection torque. (T_d)
(*ii*) Controlling torque (T_c)
(*iii*) Damping torque (D)

1. *Deflection Torque:* One important requirement in an indicating instrument is the arrangement for producing deflecting or operating torque when the instrument is connected in the electrical circuit to measure the given electrical quantity. The deflecting torque causes the moving system to move from zero position when the instrument is connected to the circuit to measure the given electrical quantity.

2. *Controlling Torque:* Due to the action of deflecting torque the pointer will continue to move indefinitely and shall be independent of the value of electrical quantity to be measured. This necessitates that the controlling torque must be provided. This controlling torque should oppose the deflecting torque and should with increase with the deflection of the moving system so that the pointer is brought to rest at a position when the opposing torques are equal. The controlling torque performs the following two functions:

(*i*) It opposes the deflecting torque and increases with the deflection of the moving system.
(*ii*) It brings the pointer back to zero position after the removal of deflecting torque.

The controlling torque is provided by the following methods:

(*a*) Spring Control
(*b*) Gravity Control

(*a*) *Spring control:* The spring control is provided in most of the indicating instruments. Basically the controlling torque is obtained either by twisted suspension wire or two spirally wound springs. In spring control the two hairsprings are made from non-magnetic alloy. Such as phosphor-bronze. The two springs are wound in opposite direction on the spindle S of the moving system. The two springs are labelled as S_1 and S_2 shown in Fig. 3.

Copyrighted material
Downloaded From : www.EasyEngineering.net

Downloaded From : www.EasyEngineering.net

When the pointer is at rest *i.e.* zero position, the control weight w_1 is vertical. When the pointer deflected through an angle θ, the control weight acquires new position. The tendency of control weight to acquire original position due to gravity provides the controlling to the moving system.

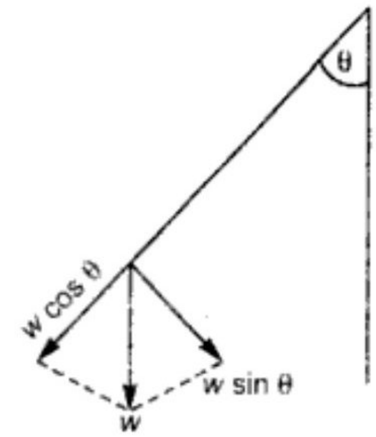

Fig. 4(b)

From above we can conclude that the control force so obtain can be given by,

$$F_c = w \sin \theta$$

And controlling torque T_c is expressed as,

$$T_c = \text{Force} \times \text{perpendicular distance}$$

$$T_c = w \sin \theta . l$$

$$T_c = w\, l \sin \theta$$

Here, assuming w_1 Constant we get the controlling torque is directly proportional to the sine of angle between the moving system and the weight-applied w_1.

3. *Damping Torque:* If the moving system is acted upon by deflecting torque alone then the pointer due to its inertia will oscillate about final position before coming to rest. These oscillations are undesirable and must be prevented. In order to avoid oscillation of the pointer and to bring it quickly to its deflected position, damping torque is provided, which opposes the movement in backward or forward of the pointer and operates only when the system is moving.

It is worthwhile to mention here that damping torque acts only when the pointer is in motion. When the pointer is in a particular final position though deflecting and controlling torques are acting on the moving system but the damping torque is zero because the pointer is steady and there is no movement of the moving system. In fact damping torque act like a brake on the moving system.

The degree of damping decides the behaviour of the moving system. If the instrument is under-damped the pointer oscillate about the final position and take some time to come to rest. On the other hand if the instrument is over-damped, the pointer will become slow and lethargic. However if the degree of damping is adjusted to such a value that the pointer moves and quickly come to its final position, the instrument is said to be deadbeat. Fig. 5 shows the graph for under damping, over damping and critical damping (Deadbeat).

Method commonly used to provide damping are

(*i*) Air friction damping

(*ii*) Eddy current damping

(*iii*) Fluid damping

Classification of MI instrument

MI instruments are of two types:

1. Attraction type
2. Repulsion type

1. Attraction Type Moving Instruments

Principle : These instruments are based on the principle that when an unmagnetised soft iron piece is placed in the magnetic field, then the piece is attracted towards the coil. The moving system of the instrument is attached to the soft iron piece and the operating current is passed through a coil placed near it. The operating current sets up magnetic field, which

Material com direitos autorais
Downloaded From : www.EasyEngineering.net

Downloaded From : www.EasyEngineering.net

Since deflection $\theta \propto I^2$ therefore scale of such instruments is non-uniform being crowded in the beginning. In order to make the scale of such instruments uniform, suitably shaped iron piece is used.

2. Repulsion Type Moving Instruments

Principle : These instruments are based on the principle of repulsion between the two iron pieces similarly magnetized.

Construction : It consists of a fixed cylindrical hollow coil which carries the operating current (see Fig. 6). Inside the coil there are two soft iron pieces or vanes one of which is fixed and other is movable. The fixed iron piece attached to the coil whereas the movable iron piece is attached to the pointer shaft. Under the action of deflecting torque the pointing attached to the moving system moves over the scale.

The controlling torque is produced by spring control method and damping torque is provided by air friction damping.

Working: When the instrument is connected in the circuit current flows through the coil. The magnetic field magnetizes both the iron pieces in the same direction *i.e.*, both pieces become similar magnets and hence they repel each other. Due to this force of repulsion only movable iron piece moves as the other piece is fixed and can not move. The results is that the pointer attached to the moving system moves from zero position.

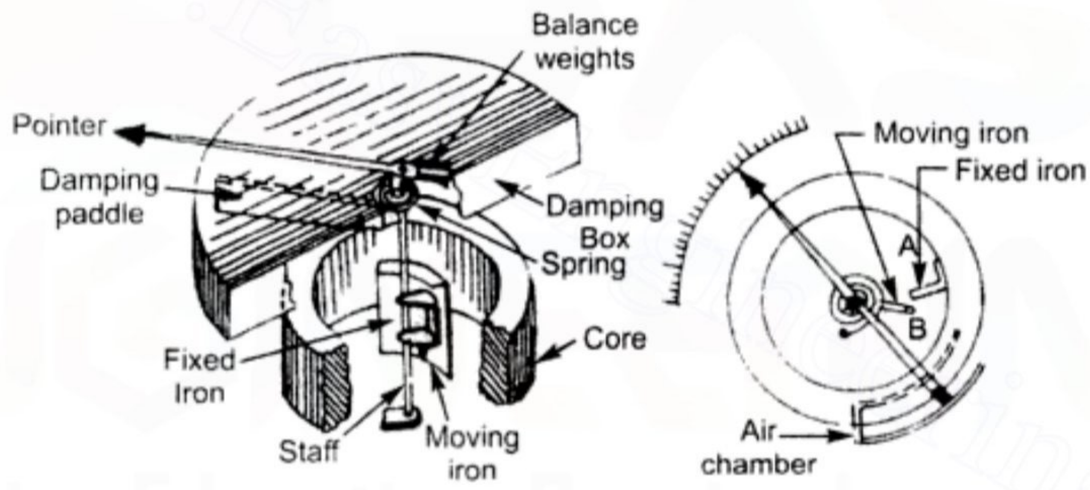

Fig. 6. *Moving iron repulsion type constructional feature.*

Deflecting Torque: The deflecting torque result due to the repulsion between the similarly changed iron pieces. If the two pieces develop pole strength m_1 and m_2 respectively, then,

Instantaneous deflecting torque $\propto$ repulsive force

$$\propto m_1 m_2$$

Since pole strengths developed are proportional to H,

Instantaneous deflecting torque,

$$T_d \propto H^2$$

Assuming constant permeability H α current I through coil

Deflecting torque $T_d \propto I^2$

Controlling torque provided by springs $T_c \propto \theta$

In the steady position of deflection,

Material com direitos autorais
Downloaded From : www.EasyEngineering.net

Downloaded From : www.EasyEngineering.net

$$T_d = T_c$$
$$\theta \propto I^2$$
$$\propto I^2 \quad \text{(for d.c.)}$$
$$\propto I_{r.m.s.} \quad \text{(for a.c.)}$$

Since deflection θ is proportional to square of current through the coil therefore scale of such instruments is non-uniform; being crowded in the beginning. However, scale of such instruments can be made uniform by using torque shaped iron pieces.

Merits and Demerits of Moving Iron Instruments

Merits: The moving iron instruments have the following advantages:

1. These are cheap, robust and simple in construction.
2. The instruments can be used for both a.c. as well as d.c. circuits.
3. These instruments have high operating torque.
4. These instruments are reasonably accurate.

Demerits: The following are the disadvantages of moving iron instruments:

1. Such instruments have non-uniform scale.
2. These instruments are not very sensitive.
3. Errors are introduced due to change in frequency in case of a.c. measurements.
4. Higher power consumption.

Moving Coil Instruments

Moving coil instruments are of two types namely :

1. Permanent magnet type (for d.c. work only)
2. Dynamo-meter type (for both a.c. and d.c. work)

Permanent-Magnet Type Moving Coil Instruments

These instruments are employed either as ammeters or voltmeters and can be used for d.c. work only.

Principle: This type of instrument is based on the principle that when a current carrying conductor is placed in a magnetic field mechanical force acts on the conductor. The coil placed field and carrying operating current is attached to the moving system. With the movement of the coil the pointer moves over the scale.

Construction: It consists of a powerful permanent magnet with soft iron pieces and light rectangular coil of many turns of fine wire wound on aluminium former inside which is an iron core shown as in Fig. The purpose of coil is to make the field uniform. The coil is mounted on the spindle and acts as the moving element. The current is led into and out of the coil by means of the two control hair springs one above and the other below the coil. The springs also provide the controlling torque. Eddy current damping is provided by aluminium former.

Working: When the instrument is connected in the circuit, operating current flows through the coil. This current carrying coil is placed in the magnetic field produced by the permanent magnet and therefore mechanical force act in the coil. As the coil is attached to the moving system the pointer moves over the scale.

Material com direitos autorais
Downloaded From : www.EasyEngineering.net

Downloaded From : www.EasyEngineering.net

$$T_c \propto I \quad \text{...(2)}$$

The pointer will come to rest at a position when $T_d = T_c$

From equations (1) and (2) we get,

$$\theta \propto I$$

Thus the deflection θ is directly proportional to the operating current. Therefore such instruments have uniform scale.

Advantages:

(i) Uniform scale

(ii) Very effective eddy current damping

(iii) Power consumption is low

(iv) No hysteresis loss

(v) As working field is very strong therefore such instruments are not affected by stray fields.

(vi) Such instruments require small operating current

(vii) Very accurate and reliable.

Disadvantages:

(i) Such instruments cannot be used for a.c measurements.

(ii) Some errors are caused due to the ageing of control springs and the permanent magnet.

(iii) Costlier as compared to moving iron instruments.

Extension of Range of PMMC Instruments

The range of PMMC instruments can be extended by using shunt and multipliers :

Extension of range of ammeter by using shunt: The shunts are basically used to bypass the high current in the circuit. The shunt is very low resistor, which is connected in parallel with the ammeter. The basic movement of meter of a d.c. ammeter in a PMMC is *d*'Arsonoval galvanometer. The coil winding of a basic movement meter is small and light and can carry very small currents. Fig. 8 shows the basic movement and its shunt in ammeter circuit.

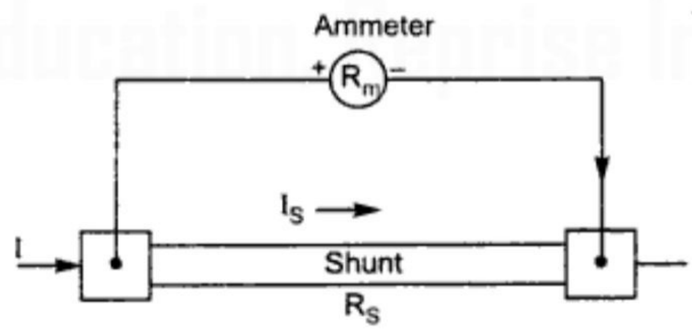

Fig. 8. *Ammeter shunt.*

By KVL, the shunt resistance can be calculated.

Where in circuit,

R_{sh} = shunt resistance

I_{sh} = shunt current

R_m = resistance of movement in coil.

I_m = deflection current of movement

I = current to be measured

Material com direitos autorais
Downloaded From : www.EasyEngineering.net

Downloaded From : www.EasyEngineering.net

The controlling torque is provided by two springs which also serve the additional purpose of leading the current into and out of the moving coil. Air friction damping is provided in such instruments.

Working: When the instrument is connected in the circuit operating currents flow the coils. Due to this mechanical force exists between the coils. The result is that the moving the coil (which is capable of moving moves the pointer over the scale. The pointer comes to rest at a position where deflecting torque is equal to the controlling torque.

By reversing the current the field due to the fixed coils is reversed as well as the current in the moving coil so that the direction of deflecting torque remain unchanged. Therefore such instrument can be used for both d.c and a.c measurement.

Deflecting Torque

Let I_r = current through fixed coil

I_m = current through moving coil

$$T_d \propto I_t I_m$$

Since $I_t - I_m$, the fixed and moving coils being in series,

$$T_d \propto I^2 \quad ...(i)$$

Since the control is by springs therefore controlling torque is proportional to the angle of deflection θ *i.e.*,

$$T_e \propto \theta \quad ...(ii)$$

The pointer will come to rest at a position when $T_d = T_e$

From equations (*i*) and (*ii*), we get

$$\theta \propto I^2$$

It is clear that of the pointer is directly proportional to the square of the operating current. Hence, the scale of these instruments is non-uniform being crowded in their lower parts and spread out at the top (see Fig. 9)

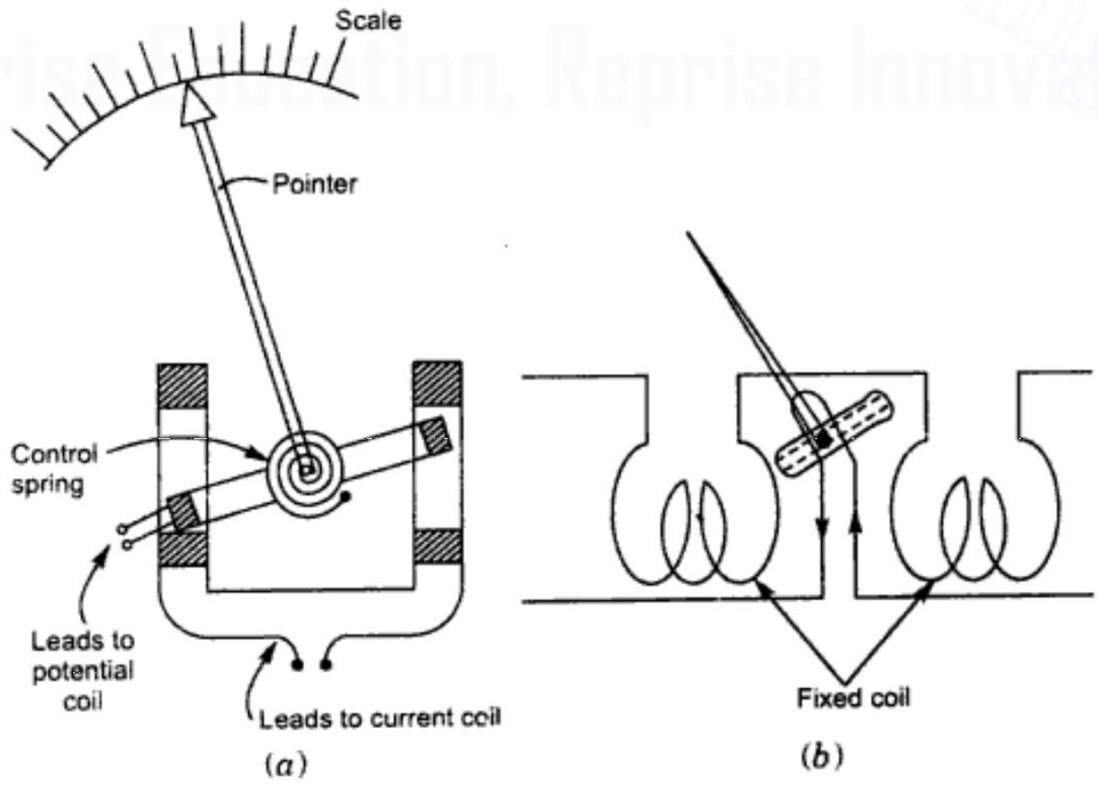

Fig. 9. *Constructional feature of dynamometer instrument.*

Material com direitos autorais
Downloaded From : www.EasyEngineering.net

Downloaded From : www.EasyEngineering.net

$$\frac{I}{I_m} = \frac{R_m + R_s}{R_s}$$

$$I = \frac{I_m . R_m + R_s}{R_s}$$

i.e. Circuit current = f.s.d. Current. $\frac{R_m + R_s}{R_s}$

Instrument Constant

The ratio of current to be measured to full-scale deflection current is called instrument constant *i.e.*,

$$\text{Instrument constant} = \frac{I}{I_m} = \frac{R_m + R_s}{R_s}$$

It is clear that with different shunts the same instruments will have different instrument constant.

2. Shunt with voltmeter: High resistance is connected in series with its coil.

Let R_m = voltmeter resistance

R = high resistance in series with voltmeter coil

I_m = full scale deflection current for voltmeter.

Since voltmeter is connected in parallel with circuit AB,

Voltage across AB = voltage across voltmeter

$$V = I_m (R + R_m)$$

$$R + R_m = \frac{V}{I_m}$$

$$R = \frac{V}{I_m - R_m}$$

i.e., Required high resistance,

$$R = \frac{\text{Max. voltage be measured}}{\text{f.s.d. voltmeter current}} - \text{voltmeter resistance}$$

Where f.s.d. → full scale deflection

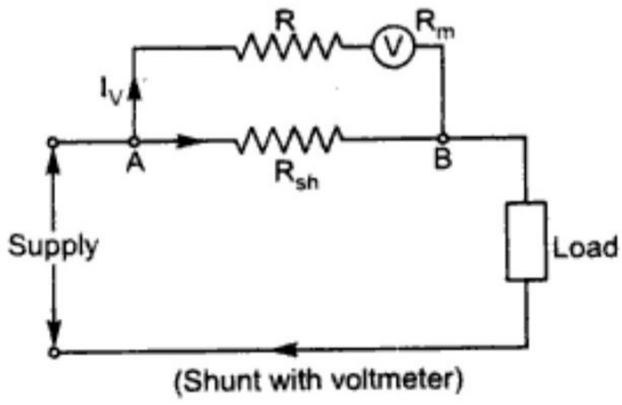

(Shunt with voltmeter)

Fig. 11

Bahan dengan hak cipta
Downloaded From : www.EasyEngineering.net

Downloaded From : www.EasyEngineering.net

Shunts for a.c. Instruments

In order to maintain the current division between the shunt and instrument constant for all frequencies the ratio of impedances of the instrument and leads to that of the shunt must remain constant.

If L_m and L_s are the inductances of the instrument and the shunt respectively then the ratio

$$\frac{\sqrt{R_m^2 + \omega^2 L_m^2}}{\sqrt{R_s^2 + \omega^2 L_s^2}} = \text{const.}$$

Should remain constant for all the frequencies which is possible only when time constants of the shunt and instrument are same.

$$\frac{L_m}{R_m} = \frac{L_s}{R_s} = k$$

Multiplying factor,

$$N = \frac{1}{I_m} = \frac{I_s + I_m}{I_m} = \frac{I_s}{I_m + 1}$$

$$= \frac{\sqrt{R_m^2 + \omega^2 L_m^2}}{\sqrt{R_s^2 + \omega^2 L_m^2}} + 1 = \frac{R_m\sqrt{1 + \omega^2\left(\frac{L_m}{R_s}\right)^2}}{R_s\sqrt{1 + \omega^2\left(\frac{L_s}{R_s}\right)^2}} + 1$$

$$\frac{R_m\sqrt{1 + \omega^2 k^2}}{R_s\sqrt{1 + \omega^2 k^2}} + 1 = \frac{R_m}{R_s} + 1 = Mf$$

Measurement of Electric Voltage, Current, Power and Energy

Voltage and Current

Moving iron instrument are used as ammeters and voltmeter only. They work both on A.C and D.C system.

(*i*) *Ammeter:* An instruments which is used to measure electric current in a circuit is called an ammeter.

An ammeter is always connected in series with the circuit and carries the current to be measured or function of it. This current flowing through the operating coil produces the desired deflecting torque(see Fig. 12) since an ammeter to be connected in series therefore it should have a low resistance. Hence, when a moving iron instrument is used as ammeter the operating coil is provided with a few turns of thick wire so that it has low resistance.

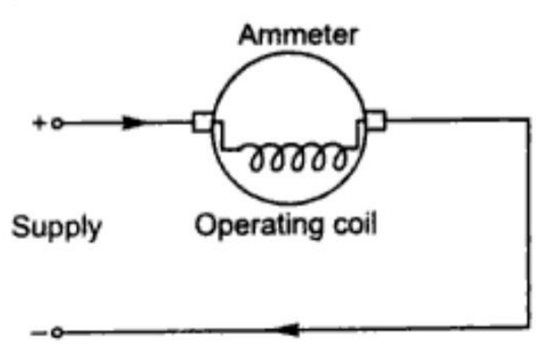

Fig. 12

Bahan dengan hak cipta
Downloaded From : www.EasyEngineering.net

Downloaded From : www.EasyEngineering.net

(*ii*) *Voltmeter:* An instrument which is used to measure voltage between two points in a circuit is called a voltmeter.

A voltmeter is always connected in parallel in the portion whose voltage is to be measured. This current flowing through the operating coil of the meter produced the deflecting torque (see Fig. 13). since voltmeter is connected in parallel in order that its connection does not disturb the circuit condition therefore the resistance of the voltmeters should be very high. To do so a high resistance (of the order of kilo ohms) is connected in series with the coil of the instrument as shown.

Let R_V be the total resistance (resistance of operating coil + high series resistance) of the instrument. The small current I_V flowing through the instrument is given by;

$$I_V = \frac{V}{R_V}$$

Clearly deflection

$$\theta \propto I_V \propto \frac{V}{R_V}$$

$$\theta \propto V$$

Therefore deflection of proportional to the voltage and hence the instrument measures voltage.

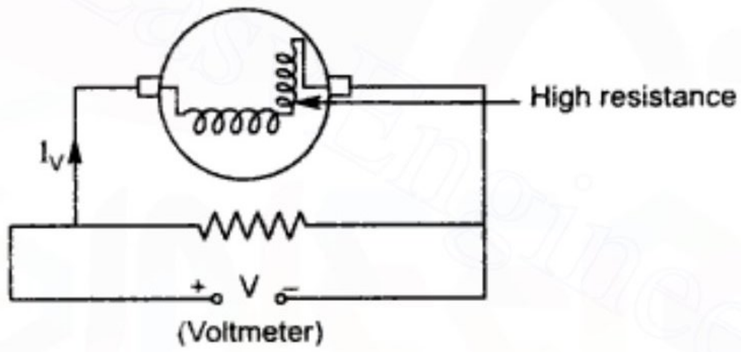

Fig. 13

Induction Voltmeters and Ammeters

Induction type voltmeters and ammeters are used for a.c. measurements only. They can be either of Ferrari's type or shaded pole type. When used as an ammeter current to be measured or a part of it is passed through the operating coil of the instrument. However, when used as a voltmeter current proportional to the voltage to be measured is passed through the operating oil.

$$T_d \propto I^2$$

$$T_d \propto V^2$$

Power

(*a*) **Induction Type wattmeter:** The induction type wattmeter is used to measure a.c power only in contrast to dynamometer wattmeter which can be used to measure d.c. as well as a.c. power.

Principle : The principle of operation of an induction wattmeter is the same as that of induction ammeters and voltmeters i.e. induction principle. However, it differs from induction

Bahan dengan hak cipta
Downloaded From : www.EasyEngineering.net

Downloaded From : www.EasyEngineering.net

current coil and I_V in the voltage coil and also the corresponding fluxes $\varnothing$ and $\varnothing_C$ are $(90 - \varnothing)$ apart.

The flux $\varnothing_V$ induces eddy currents i_V the aluminum disc which lags behind $\varnothing_V$ by 90° similarly $\varnothing_C$ induces eddy currents i_C which again lag behind $\varnothing_C$ by 90°.

Mean deflecting torque,

$$T_d \propto \varnothing_V \varnothing_C \sin(90° - \varnothing)$$
$$\propto VI \cos \varnothing$$
$$\propto \text{a.c power}$$

since control is by springs therefore,

$$T_C \propto \theta$$

For steady deflected position,

$$T_d = T_c$$
$$\theta \propto \text{power}$$

Hence such instruments have uniform scale.

(*b*) **Dynamometer Type Wattmeter:** A dynamometer type wattmeter is most commonly employed for measurement of power in a.c as well as d.c circuits.

Principle : It is based on the principle that mechanical force existing between two current carrying conductors.

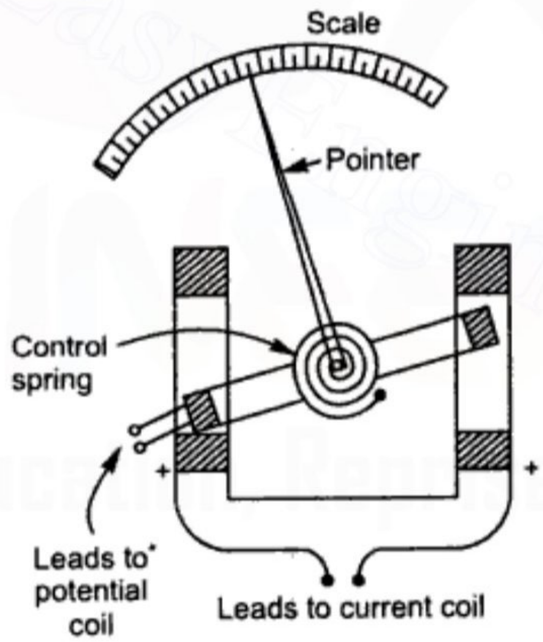

(a) *Dynamometer type wattmeter*

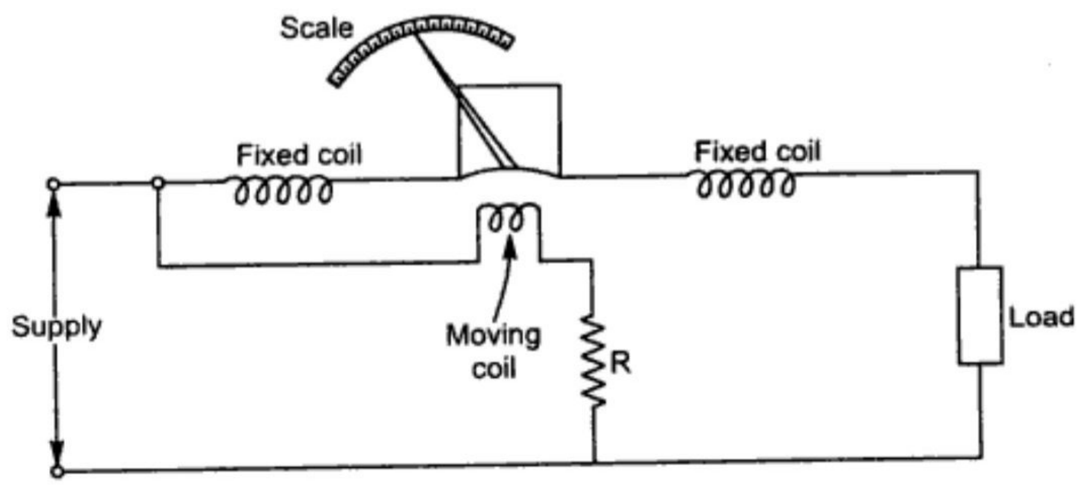

Fig. 15 (b)

Bahan dengan hak cipta
Downloaded From : www.EasyEngineering.net

Downloaded From : www.EasyEngineering.net

Construction: It essentially consists of two coils namely ; fixed coil and moving coil. The fixed coil is split into two equal parts which are placed closed together and parallel of each other. The moving coils is pivoted between the two fixed coils and is on the spindle to which is attached the pointer.

The fixed coils are connected in the series with the load and carry the circuit current. it is therefore called current coil. The moving coil is connected across the load and carries current proportional to the voltage. It is therefore called *potential coil*. Generally a high resistance is connected in series with potential coil to limit the current through it.

The controlling torque is provided by springs which is also serve the additional purpose of leading current into and out of the moving coil. Air friction damping is employed in such instruments.

Working: When power is to be measured in a circuit the instruments is suitable connected in the circuit. The current coil is connected in series with load so that is carried the circuit current. The potential coil is connected across the load so that is carries current proportional to the voltage.

Due to the current in the coil mechanical force exists between them. The result is that the moving coil which is capable of moving , moves the pointer over the scale. The pointer comes to rest at a position where deflecting torque is equal to the controlling torque.

Reversing the current reverses the field due to fixed coil as well as the current in the moving coil so that the direction of the deflection torque remains unchanged therefore such instruments can be used for the measurement of a.c. as well as d.c. power.

Deflecting Torque: It can be easily proved that deflecting torque is proportional to the power in the circuit.

D.C. Work: Let us suppose that in a d.c. circuit,

$$V = \text{voltage across load}$$

$$I = \text{current through load}$$

Current through fixed coil,

$$I_f \propto I$$

Current through moving coil,

$$I_m \propto V$$

Deflecting torque T_d is due to currents I_f and I_m.

$$T_d \propto I_m I_f \propto VI \propto \text{power}$$

A.C. Work: Let us suppose that in an a.c circuit,

$$E = \text{instantaneous voltage across load}$$

$$I = \text{instantaneous current through load}$$

If the load has a lagging power factor of cos ∅ then equations become:

$$E = E_m \sin \omega t$$

$$I = I_m \sin (\omega t - \varnothing)$$

Current through fixed coil

$$I_f \propto i$$

Current through moving coil,

$$i_m \propto e$$

Bahan dengan hak cipta
Downloaded From : www.EasyEngineering.net

Downloaded From : www.EasyEngineering.net

The current coil carries the line current and produces magnetic field in phase with the line current. The pressure coil is made highly inductive so that the current through it lags behind the supply voltage by 90° thus a phase difference of 90° exists between the fluxes produced by the two coils. This sets up a rotating field which interacts with the disc to cause it to rotate.

Construction: A single phase induction type energy meter generally has the following details:

1. Moving system
2. Operating mechanism
3. Recording mechanism

1. Moving System: The moving system consists of a light aluminium disc on a vertical spindle. The spindle is supported by a cup-shaped jeweled bearing at the bottom end and has a spring journal bearing at the top end.

There is no pointer and control spring so that the disc makes continuous rotation under the action of deflecting torque.

2. Operating mechanism: The operating mechanism consists of

(*i*) Series circuit

(*ii*) Shunt magnet

(*iii*) Breaking magnet

(*i*) *Series magnet:* This series magnet consist a number of U-shaped laminations assemble together to form a core. A thick wire of few turns is wound on both legs of the U-shaped laminated core. The wound coil is known as current coil and is connected in series will the load so that is carried the load current. The series magnet is placed underside the aluminium disc and produces magnetic field proportional to and in phase with the current.

(*ii*) *Shunt magnet:* The shunt magnet consists of a number of M-shaped laminations assembled together to form a core. A fine wire of large turns is wound on the central limb of this magnet. The wound coil is known as pressure coil and is connected across the load so that is carried current proportional to supply voltage. The shunt magnet is placed above the aluminium disc as shown.

In order to obtain deflecting torque current in the pressure coil must lag behind the supply voltage by 90°. This necessary phase shift is obtained by placing a copper ring (also known as compensating loop) over central limb of shunt magnet. This copper ring as a short circuited transformer secondary. As its inductance is high as compared with its resistance the current circulating in the ring will lag by nearly 90° behind the voltage producing it.

(*iii*) *Braking magnet:* The speed of aluminium disc is controlled to the required value by the C-shaped permanent breaking magnet. The magnet is mounted is so that the disc resolves in the air gap between the polar extremities. As the disc rotates currents are induced in the disc because it cuts the flux produced by the breaking magnet. The direction of the current in the disc is such that it oppose the rotation of the disc. Since the induced currents in the disc are proportional to the speed of the disc therefore braking torque is proportional to the disc speed *i.e.* $T_B \propto N$.

3. Recording Mechanism: When the energy meter is connected in the circuit to measure electrical energy the current coil carries the load current where as the pressure coil carries current proportional to the supply voltage. The magnetic field due to current coil is in

Material com direitos autorais
Downloaded From : www.EasyEngineering.net

Downloaded From : www.EasyEngineering.net

phase with line current whereas the magnetic produced due to pressure coil lags approximately 90° behind the supply voltage.

The current coil field produces eddy currents in the disc which react with the field due to the pressure coil. Thus a driving force is created which causes the disc to rotate.

The braking magnets provide the braking torque on the disc. By altering the position of this magnet desired speed can be obtained. The spindle is geared to the recording mechanism so that electrical energy consumed in the circuit is directly registered in kWh.

Theory: The current coil carries current proportional to load current whereas the pressure coil carries current proportional to voltage.

SOLVED NUMERICAL PROBLEMS

Example 1: *The torque of an ammeter varies on the square of the current through it. If a current of 6A produces a deflection of 90°, what will be the deflection for a current of 3A when the instrument is*

(*a*) Sping-controlled

(*b*) Gravity controlled.

Solution : We have,

$$T_d \propto I^2$$

(*a*) For spring control,

$$T_C \propto \theta \quad \text{and} \quad \theta \propto I^2$$

So, $90° \propto (6)^2$ and $\theta \propto (3)^2 = 90° \times \frac{(3)^2}{(6)^2} = 90° \times \frac{9}{36}$

$$= 90° \times 2.5 = 22.5°.$$

(*b*) For gravity control,

$$T_C \propto \sin\theta \quad \therefore \quad \sin\theta \propto I^2$$

$\sin 90° \propto 6^2$ and $\theta \propto 3^2$

$$\sin\theta = \frac{9}{36}$$

$$\theta = \sin^{-1} 2.5$$

$$\theta = 14.3°$$

MI Instrument

Example 1: *A 230 V moving-iron voltmeter takes a current of 0.03A when connected to a 230 V d.c. supply. The coil has an inductance of 2 henry. Calculate the reading in the meter when connected to a 230 V, 80 Hz a.c. supply.*

Solution : When used in d.c. supply, the instrument offers ohmic resistance only. Therefore,

$$\text{Resistance of Instrument} = \frac{230}{0.03}$$

Material com direitos autorais
Downloaded From : www.EasyEngineering.net

Downloaded From : www.EasyEngineering.net

$$= \frac{230 \times 100}{3} = \frac{23 \times 1000}{3} = 7666.7\ \Omega$$

When used in a.c. supply,

Impedance at 80 Hz $= \sqrt{(7666.7)^2 + (2\pi \times 80 \times 2)}$

$$= \sqrt{5877 + 2 \times 3.14 \times 80 \times 2} = 7676.8\ \Omega.$$

Instrument reading

$$= 230 \times \frac{7666.7}{7676.8} = 229.6\ \text{V}$$

Moving Coil Instrument

Example 1: *A moving coil instrument having a resistance of 40 ohms has a full scale deflection of 1 mA. Calculate :*

(a) Shunt resistance to convert the instrument into an ammeter of 2A range.

(b) Total resistance of the meter.

Solution : The equivalent circuit is drawn below :

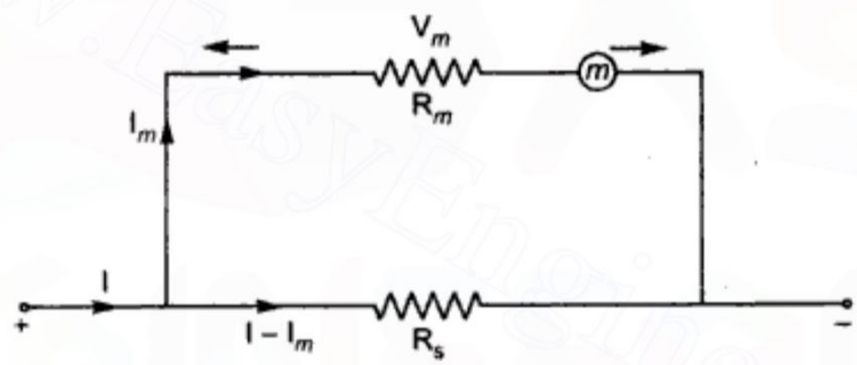

Given, $I = 2A$

$$I_m = 1 \times 10^{-3}\ \text{A}$$

$$R_m = 50\ \Omega.$$

$$I_m \times R_m = (I - I_m)\, R_S$$

(*a*) $R_S = \dfrac{1 \times 10^{-3} \times 40}{2 - 1 \times 10^{-3}} = \dfrac{50 \times 10^{-3}}{2 - 1 \times 10^{-3}} = 0.0250\ \Omega.$

(*b*) Total resistance $= \dfrac{(0.0250)\,50}{0.0250 + 50} = 0.025$ ohm.

Example 2: *A moving coil instrument has a full scale deflection of 1mA and a resistance of 50 Ω Find the resistance R_1, R_2 and R_3 for converting it into a multi-range voltmeter of ranges 1.5, 5 and 10 volts.*

Solution : For 1.5 V range,

$$I = \frac{V}{R_1 + R_m}$$

Material com direitos autorais
Downloaded From : www.EasyEngineering.net

Downloaded From : www.EasyEngineering.net

or, $$R_1 = \frac{V}{I} - R_m = \frac{1.5}{1 \times 10^{-3}} - 50 = 1450\ \Omega.$$

For 5 V range, $$R_2 = \frac{5}{1 \times 10^{-3}} - 50 = 4950\ \Omega$$

and for 10 V range, $$R_3 = \frac{10}{1 \times 10^{-3}} - 50 = 9950\ \Omega.$$

Electrodynamometer Type

Example 1: *The inductance of an 20 A electrodynamometer ammeter changes uniformly at the rate of 0.0035 μH / degree. The spring constant is 10^{-6} N-m / degree. Determine the angular deflection at full scale.*

Solution : Final steady state deflection $\theta = \frac{I^2}{K} \cdot \frac{dm}{d\theta}$

$$\frac{dm}{d\theta} = \frac{0.0035}{\frac{\pi}{180}} \times 10^{-6} = 0.2 \times 10^{-6}\ \text{Nm/rad.}$$

∴ Deflection $$\theta = \frac{(20)^2}{10^{-6}} \times 0.2 \times 10^{-6}$$
$$= 400 \times 0.2 = 80°$$

Example 2: *For a certain dynamometer ammeter the mutual inductance M varies with deflection θ as m = – 6 cos (θ + 30°) mH.*

Find the deflecting torque produced by 50 mA d.c. corresponding to a deflection of 60°.

Solution : Rate of change of mutual inductance with deflection.

$$\frac{dM}{d\theta} = \frac{d}{d\theta}\left[-6 \cos(\theta + 30°)\right]$$
$$= 6 \sin(\theta + 30°)\ \text{mH}$$

Now, $\frac{dM}{d\theta}$ at a deflection of 60° is $\left(\frac{dM}{d\theta}\right)_{\theta = 60°}$

$$= 6 \sin(60° + 30°)\ \text{mH}$$
$$= 6 \times 10^{-3}\ \text{H/degree.}$$

Deflecting torque,

$$T_d = I^2 \frac{dM}{d\theta}$$
$$= (50 \times 10^{-3})^2 \times 6 \times 10^{-3}$$
$$= 15 \times 10^{-6}\ \text{Nm} = 15\ \mu\text{Nm.}$$

Material com direitos autorais
Downloaded From : www.EasyEngineering.net

Downloaded From : www.EasyEngineering.net

18. Explain how an electrodynamometer type instrument is able to measure the true r.m.s. value of a voltage or current irrespective of its waveform.

19. Describe the constructional details of an Electrodynamometer type wattmeter. Derive the expression for torque when the instrument is used in a.c. Explain why it is necessary to make the potential coil circuit purely resistive?

20. Derive the expression for the capacitance to be connected across the resistor in the pressure coil circuit so as to neutralize the effect of inductance of pressure coil circuit.

21. When two wattmeter methods is used for measurement of power in a three phase balanced circuit, comment upon the readings of the two wattmeters under following condition assuming system to be star connected.

(*i*) When the power factor is unity.

(*ii*) When the power factor is zero lagging.

(*iii*) When the power factor is 0.5 lagging.

(*iv*) When the power factor is 0.3 lagging.

22. Explain construction and working of single-phase energy meter and also explain the adjustment made in energy meter with respect to following points :

(*i*) Lag adjustment

(*ii*) Friction compensation

(*iii*) Creeping.

23. What are the various types of single-phase energy meter. Explain each in brief.

24. A moving coil instrument has the following data :

Number of turns = 100,

Width of coil = 30 mm,

depth of coil = 40 mm, flux density in the air gap

$= 0.2\ \text{Wb/m}^2$.

Calculate the deflecting torque when carrying a current of 15 mA. Also calculate the deflection if the control spring constant is 2×10^{-6} Nm/degree.

25. A moving-coil instrument has at normal temperature a resistance of 15 Ω and a current of 35 millionmphere gives full scale deflection. If its resistance rises to 15.2 Ω due to temperature change, calculate the reading when a current of 2000 A is measured by means of a 0.235×10^{-3} A shunt of constant resistance. What is the percentage error ?

26. The inductance of a certain moving iron ammeter is $\left(6 + 2\theta - \frac{1}{2}\theta^2\right)$ μH, where q is the deflection in radian from the zero position. The control spring torque is 8×10^{-6} N-m/rad. Calculate the scale position in radian for current 1, 2, 3, 4 and 5 A and disucss the scale shape obtain.

27. A 240 V, 8 A electrodynamometer wattmeter has a resistance of current and potential coils of 0.5 Ω and 12000 Ω respectively. Find the percentage error due to each of the two method of connection. With unit power factor loads at 24 V with current of 6 A.

Copyrighted material
Downloaded From : www.EasyEngineering.net

Downloaded From : www.EasyEngineering.net

28. Calculate the monthly bill in the case of a consumer whose maximum demand is 110 kW, average monthly load factor is 20 percent, and where tariff in use is Rs. 30 per kW of maximum demand and 30 paise per kWh consumed.

29. The declared constant of a 5 A, 220 V d.c. watt hour meter is 3285 revolutions per kWh. Calculate the speed of the disc at full load.

Copyrighted material
Downloaded From : www.EasyEngineering.net

Downloaded From : www.EasyEngineering.net

UNIT V

11

Transformer

Introduction

A transformer is a static device consisting of two or more coils coupled through a magnetic circuit. The transfer of energy from one circuit to another takes place at different voltage levels (normally) while without a change in frequency.

Transformers are so widely used as electrical apparatus ranging from low-power, low-current electronics and control circuits to extra high voltage power systems. Transformers in which ferrites or ferromagnetic magnetic cores are used to provide tight magnetic coupling and high flux densities such transformers are known as iron core transformers. While in which air as coupling medium is called air core transformers but have poor coupling and sometimes used in low power electronics circuit. Generally work performed by transformers are; changing voltage and current level in electric power system, Impedance matching for maximum power transfer, Isolation of one circuit from another, Also used to measure voltage and currents in conjunction with measuring instrument. These are known as Instrument transformers. Normally two types of core construction are used; core types and shell types. Fig. 1.

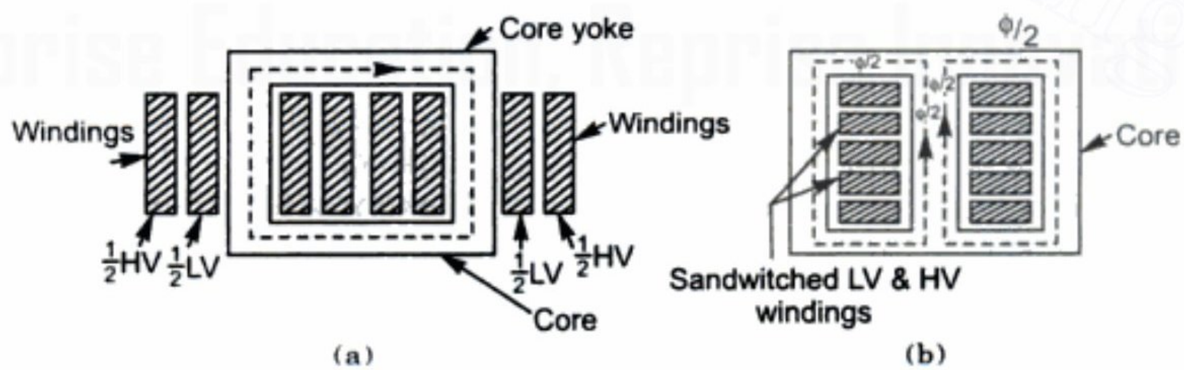

Fig. 1. *(a) Core type transformer, (b) Shell type transformer.*

In the core type the windings are wound around two legs of a magnetic core of rectangular shape while in the shell type, the windings are wound around the center leg of a Three-legged magnetic core. To reduce core losses, the magnetic core are formed of a stack of thin laminations *i e.*, silicon steel of 0.35 mm thickness material allows the use of high flux densities (1-1.5 T) while L Shaped laminations are used for shell type construction. To avoid continuous air gap lamination are stacked alternatingly Fig. 2.

Material com direitos autorais
Downloaded From : www.EasyEngineering.net

Downloaded From : www.EasyEngineering.net

For low power and high frequencies, compressed powdered ferro-magnetic alloys known as Permalloy are used. Pulse transformer and high frequency electronic transformer cores made of soft ferrites.

A schematic representation of a two-winding transformer is shown as in Fig. 3. The two verticals lines are used to signify tight magnetic coupling between the windings. One winding, which is connected to ac supply, is referred as the primary windings while other windings connected to an electrical load is referred as the secondary windings.

The windings with the higher numbers of turns will have a high voltage and it is called the High voltage (HV) or high tension (HT) winding. The windings with the lower number of turns are called the low voltage (LV) or low tension (LT) windings.

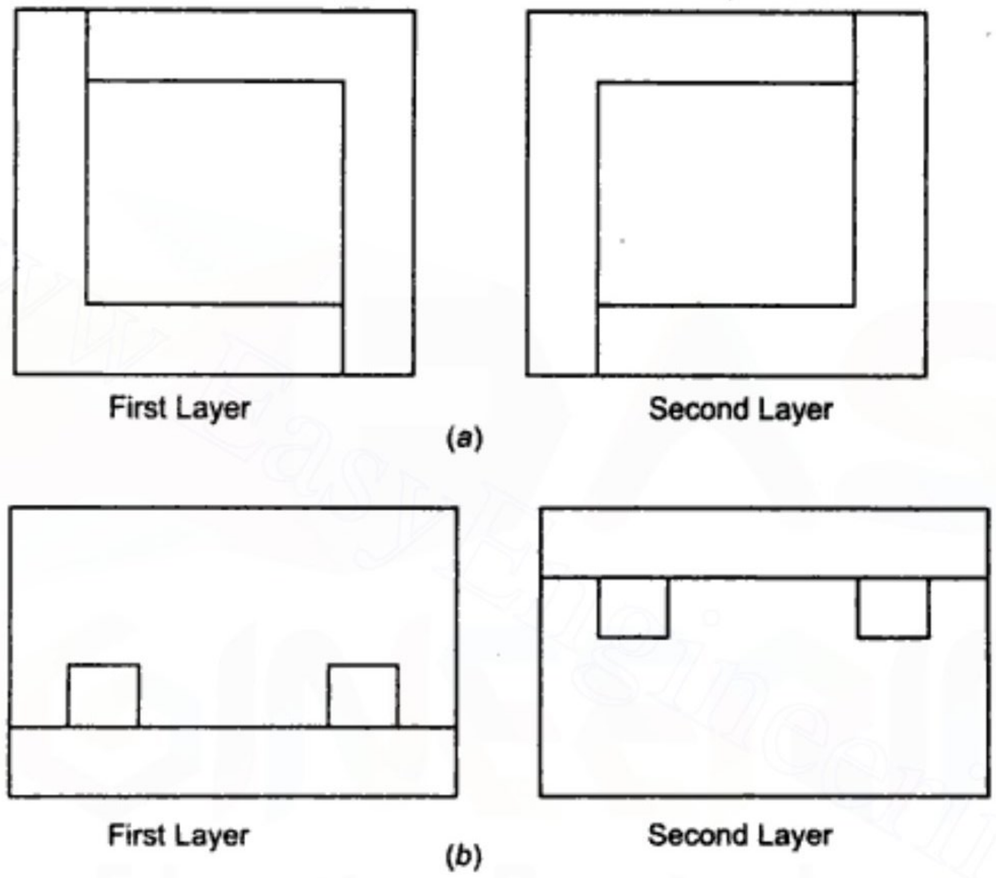

Fig. 2. *Transformer core construction (a) L-shaped lamination (b) E-shaped lamination.*

The core types of construction has a longer mean length of cores and shorter mean length of coil turn; this type is better suited for EHV requirement since there is better scope for insulation .The shell type construction has better mechanical support and good provision for bracing the windings. The shell type transformers requires more specialized fabrication facilities than core types while the latter offers the additional advantage of permitting visual inspection of coils in the case of a fault and ease of repair at substation site. For these reasons, the present practice is to use the core type transformers in large high voltage installation.

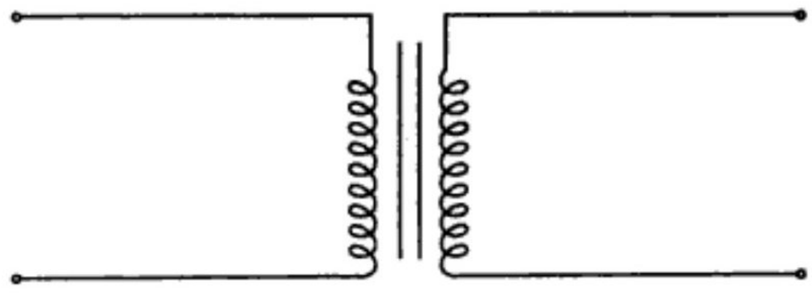

Fig. 3. *Schematic representation of two-winding transformer.*

Material com direitos autorais
Downloaded From : www.EasyEngineering.net

Downloaded From : www.EasyEngineering.net

Ideal Transformer

In order to see the effort of flow of secondary current in transformers, certain assumptions will be made which are close approximations for a practical transformer. A transformer having ideal properties is hypothetical one. Assumptions for transformer to be ideal are as following:

1. The primary and secondary windings have zero resistance *i.e.* no copper loss (ohmic loss) and no resistive voltage drop in the ideal transformers. While practical transformers finite but small windings resistances.
2. There is no leakage fluxes so all the flux is combined to the core and links both the winding while a practical transformer have a small amount of leakage flux *ie.* magnetization curve should be linear.
3. The permeability of core is infinite so that exciting current required to establish flux in core is zero (negligible).
4. Losses in the core (eddy current losses and hysteresis losses) are considered to be zero.

Fig. 4 shows an ideal transformer having a primary of N_1 turns and secondary of N_2 turns on a common magnetic core. The voltage of the source to which primary is connected is

$$v_1 = \sqrt{2}\ V_1 \cos \omega t$$

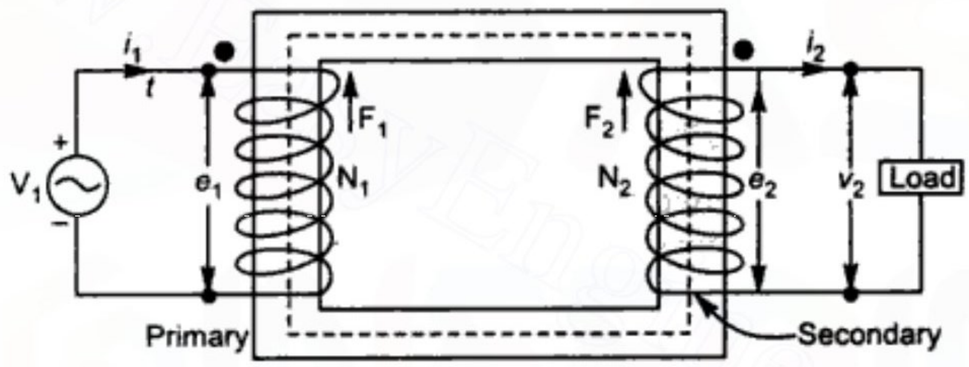

Fig. 4. *Ideal transformer on load.*

While the secondary is initially assumed to be an open circuited. As a consequence flux ϕ is established in the core such that

$$e_1 = v_1 = N_1 \frac{d\phi}{dt} \qquad ...(1)$$

But the exciting current drawn from the source is nil (*i.e.* zero) by virtue of assumption that core has infinite permeability. The core flux ϕ which is completely mutual (no leakage) flux that causes an emf *i.e.* $e_2 = N_2 \dfrac{d\phi}{dt}$ to be induced in the secondary of polarity marked on the diagram for the windings direction indicated .The dots marked at one end of each winding indicate the windings ends which simultaneously have the same polarity due to emfs. induced.

So that
$$\frac{e_1}{e_2} = \frac{N_1}{N_2} = K \qquad ...(2)$$

Since K ,the transformation ratio is a constant. While e_1 and e_2 are in phase. The secondary terminal is

$$v_2 = e_2$$

Hence
$$\frac{v_1}{v_2} = \frac{e_1}{e_2} = \frac{N_1}{N_2} = K \qquad ...(3)$$

Material com direitos autorais
Downloaded From : www.EasyEngineering.net

Downloaded From : www.EasyEngineering.net

Therefore an ideal transformer changes voltage in direct ratio of the number of turns in the two windings. In terms of rms values equation (3) will be written as

$$\frac{V_1}{V_2} = \frac{E_1}{E_2} = \frac{N_1}{N_2} = K \qquad ...(4)$$

Now let the secondary be connected to a load of impedance Z_2 so that the secondary feeds a sinusoidal current of instantaneous value i_2 to the load. Due to flow of current (i_2) the secondary creates mmf $F_2 = i_2N_2$ opposing the flux ϕ. However the mutual flux ϕ cannot change as otherwise the (v_1, e_1) balance will be disturbed (as windings has zero resistance). The result is that the primary draws a current i_1 from the source so as to create mmf $F_1 = i_1N_1$; which at all time cancels out the load caused mmf i_2N_2 so that ϕ is maintained constant independent of the load current flow.

Thus $$i_1N_1 = i_2N_2$$

$$\frac{i_1}{i_2} = \frac{N_2}{N_1} = \frac{1}{K} \qquad ...(5)$$

Obviously i_1 and i_2 are the phase for positive current directions marked on the diagram (primary current in at the dotted terminal and secondary current out of the dotted terminal) Since flux ϕ is independent load, so that e_2 and v_2 must always equal e_2 as the secondary resistance is less. Therefore from Eqs. (3) and Eqs. (5)

$$\frac{i_1}{i_2} = \frac{N_2}{N_1} = \frac{v_2}{v_1} \qquad ...(6)$$

or $$v_1i_1 = v_2i_2 \qquad ...(7)$$

Which means that the instantaneous power into primary equals the instantaneous power of the secondary; a direct consequence of the assumption (1) which means a loss less transformer.

In terms of rms value equation (6) will be written as

$$\frac{I_1}{I_2} = \frac{N_2}{N_1} = \frac{1}{K}$$

Which implies that current in an ideal transformer transform in inverse ratio of windings turns. Equation (7) in terms of rms value will read

$V_1I_1 = V_2I_2$ *i.e.* the VA output balanced by VA input.

Fig. 5 shows the schematic of ideal transformer of Fig. 4 with dot marks identifying similar polarity ends. It was already seen above that V_1 and V_2 are in phase and so are I_1 and I_2. Now

$$\frac{V_2}{V_1} = \frac{N_1}{N_2} \text{ and } \frac{I_1}{I_2} = \frac{N_2}{N_1}$$

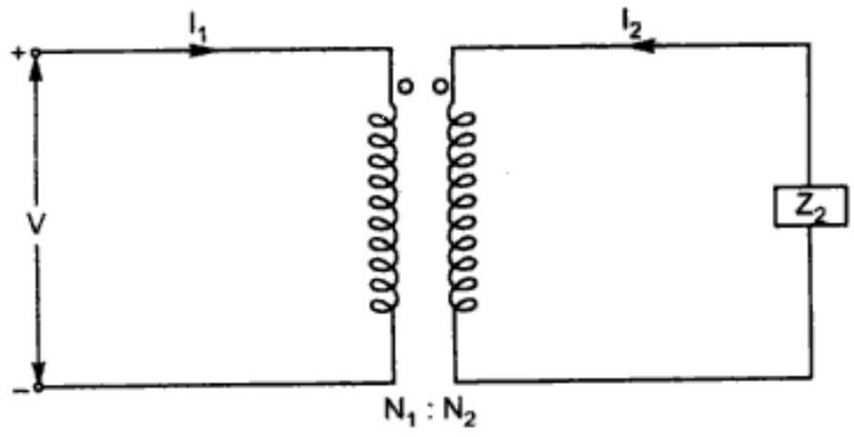

Fig. 5. *Schematic diagram of ideal Transformer.*

Material com direitos autorais
Downloaded From : www.EasyEngineering.net

Downloaded From : www.EasyEngineering.net

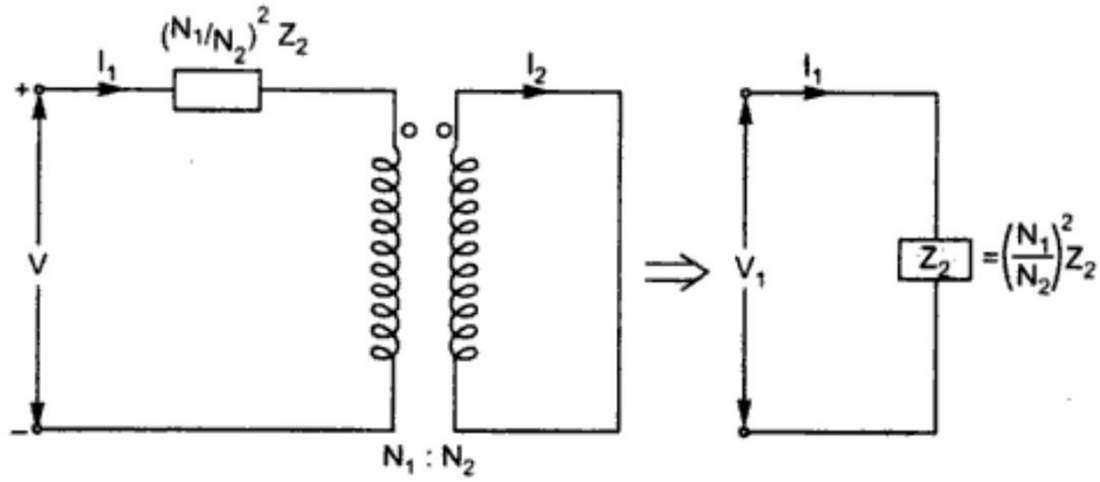

Fig. 6. *Ideal transformer referring impedance from secondary to primary.*

Dividing out above equations.

$$\frac{V_1}{V_2} = \frac{N_1}{N_2}$$

$$\frac{I_1}{I_2} = \frac{N_2}{N_1}$$

$$\frac{V_1}{I_1} = \left(\frac{N_1}{N_2}\right)^2 \frac{V_2}{I_2} = \left(\frac{N_1}{N_2}\right)^2 Z_2$$

$$Z_1 = \left(\frac{N_1}{N_2}\right)^2 Z_2 = K^2 Z_2 = Z'_2$$

Therefore we can say the impedance in secondary side when seen on the primary side in transformed in the direct ratio of the square of turns fig. 6 (*a* and *b*).

Similarly impedance Z_1 from the primary side can be referred to the secondary as

$$Z_1 = \left(\frac{N_2}{N_1}\right)^2 Z_1 = \left(\frac{1}{K}\right)^2 Z_1$$

Transferring impedance from one side to other side of transformer is known as referring the impedance to the other side.

It may be concluded that is an ideal transformer voltages are transformed in the direct ratio of turns; currents in the inverse ratio and impedances in the direct ratio squared; while power and VA remain unaltered.

Real Transformer and its Equivalent circuit

In the real transformer; both the primary and secondary have finite resistances R_1 and R_2 ; which are uniformly distributed throughout the windings, These gives rise to associated copper losses(I^2R). While a major part of the total flux is confined to the core as mutual flux ϕ linking both the primary and secondary, a small amount of flux does leak through paths which lie mostly in air and link separately in the individual windings. In Fig. 7 with primary and

Материал, защищенный авторским правом
Downloaded From : www.EasyEngineering.net

Downloaded From : www.EasyEngineering.net

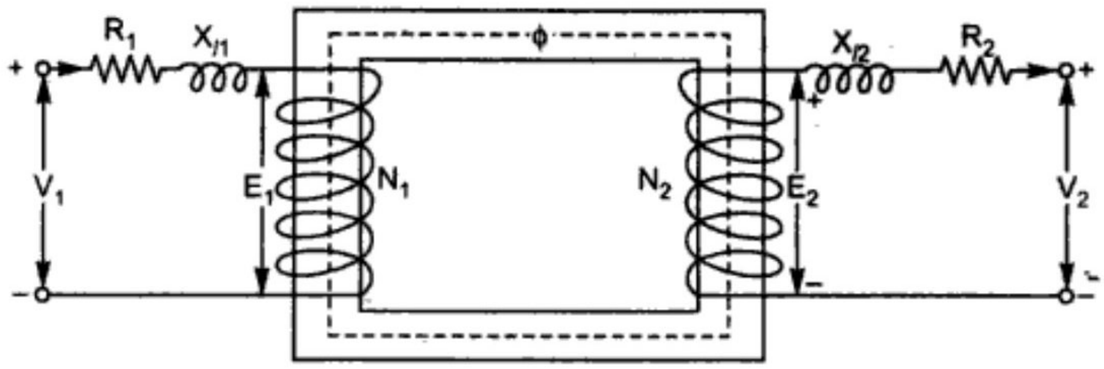

Fig. 8. *Circuit model of semi-ideal transformer.*

Equivalent Circuit

The current I_1 flowing in the primary of semi-ideal transformer can be visualized to comprise two components as below:

(*i*) Exciting current I_o whose magnetizing component I_m creates mutual flux ϕ and whose core loss component I_c provide the loss associated with alternation of flux.

(*ii*) A load component I'_2 which counter balances the secondary mmf $I_2 N_2$ so that the mutual flux remain constant independent of load, determined only by E_1.

Thus $$I_1 = I_o + I'_2$$

where $$\frac{I'_2}{I_2} = \frac{N_2}{N_1}$$

The exiting current I_o can be represented by the circuit model of Fig. 7 so that semi-ideal transformer of Fig. 8 is now reduced to the true ideal transformer. The corresponding circuit (Equivalent circuit) modeling the behavior of a real transformer is drawn in Fig. 9 (*a*) where is for ease of drawing the core not shown for the ideal transformer.

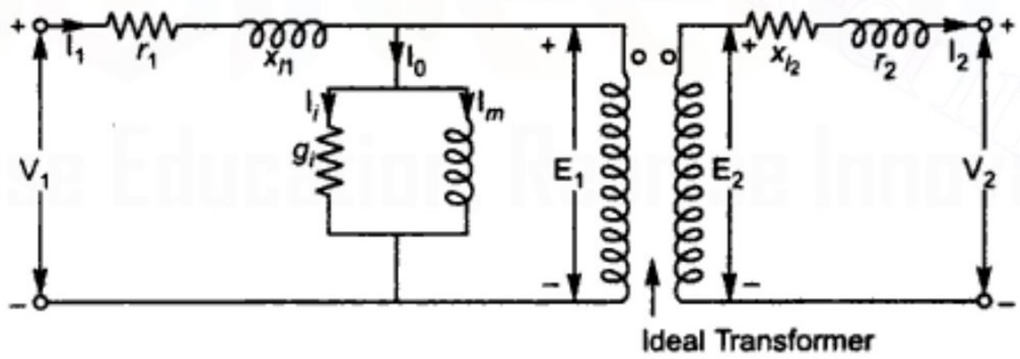

(*a*)

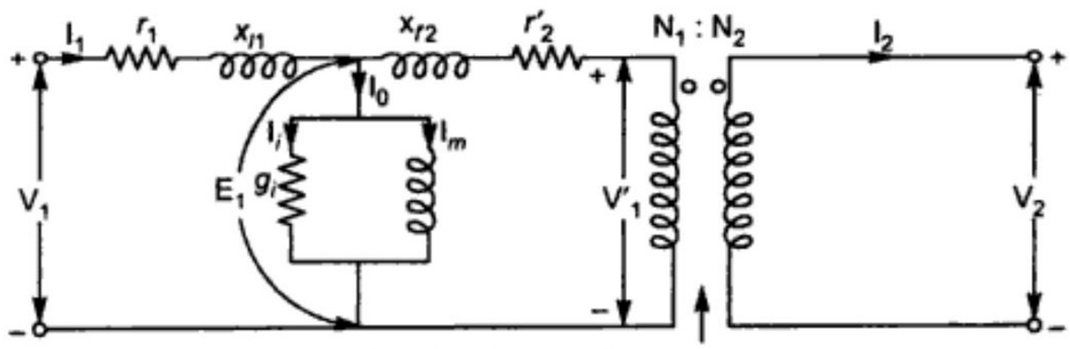

(*b*) **Ideal transformer**

Материал, защищенный авторским правом
Downloaded From : www.EasyEngineering.net

Downloaded From : www.EasyEngineering.net

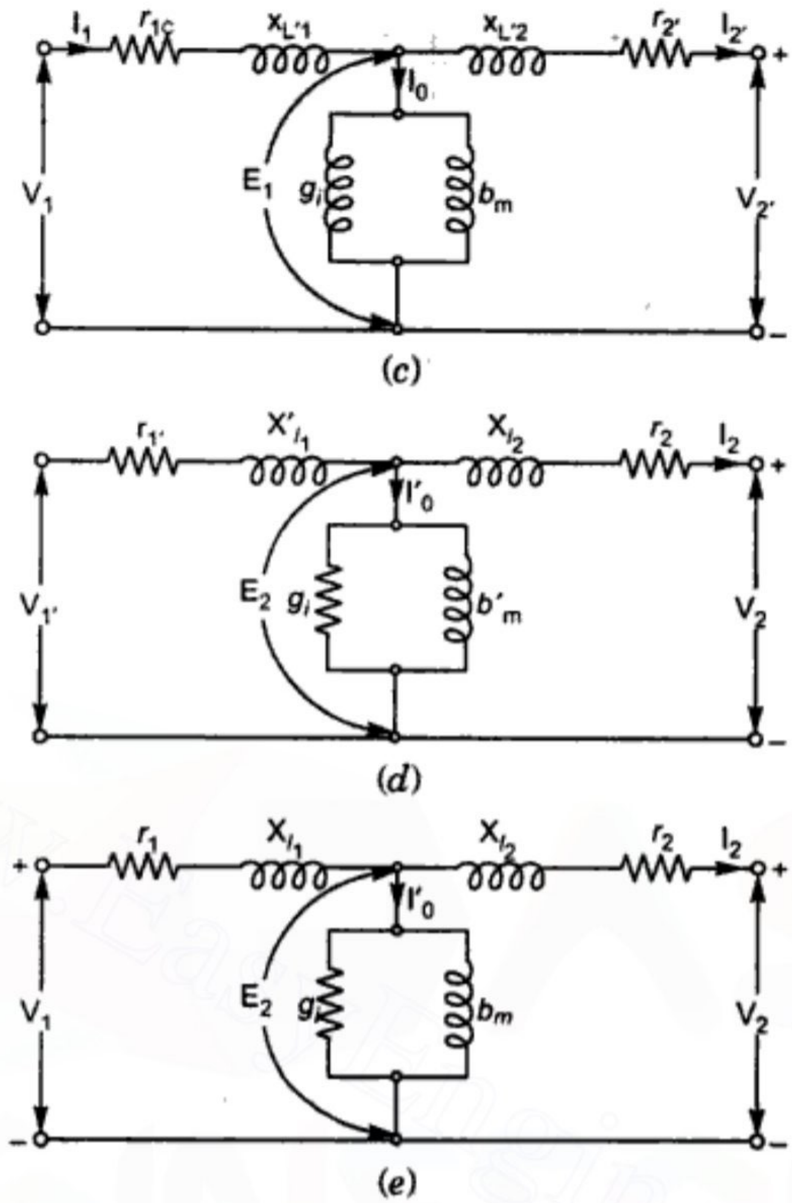

Fig. 9. *Development of transformer equivalent circuit.*

The impedance $(R_2 + jX_{l2})$on the secondary side of ideal transformer can now referred to its primary side resulting in the equivalent circuit of Fig. T-9 (*b*)

Where in $$X'_{l2} = \left(\frac{N_1}{N_2}\right)^2 X_{l2} \text{ and } R'_2 = \left(\frac{N_1}{N_2}\right)^2 R_2$$

The load voltage and current referred to the primary side are

$$V'_2 = \left(\frac{N_1}{N_2}\right) V_2 \text{ and } I'_2 = \left(\frac{N_2}{N_1}\right) I_2$$

The transformer equivalent circuit can similarly be referred to side 2 by transforming all impedances, voltages and current to the side 2. It may be noted here that the admittances (conductance and susceptance) are transformed in the inverse ratio squared in contrast to impedances. The equivalent circuit of Fig. 9 (*c*) referred to side 2 is given in Fig. 9 (*d*) where in

$$G'_i = \left(\frac{N_1}{N_2}\right)^2 G_I \,;\, B'_m = \left(\frac{N_1}{N_2}\right)^2 B_m$$

$$R'_1 = \left(\frac{N_2}{N_1}\right)^2 R_1 \,;\, X'_{l1} = \left(\frac{N_2}{N_1}\right)^2 X_{l1}$$

Материал, защищенный авторским правом
Downloaded From : www.EasyEngineering.net

Downloaded From : www.EasyEngineering.net

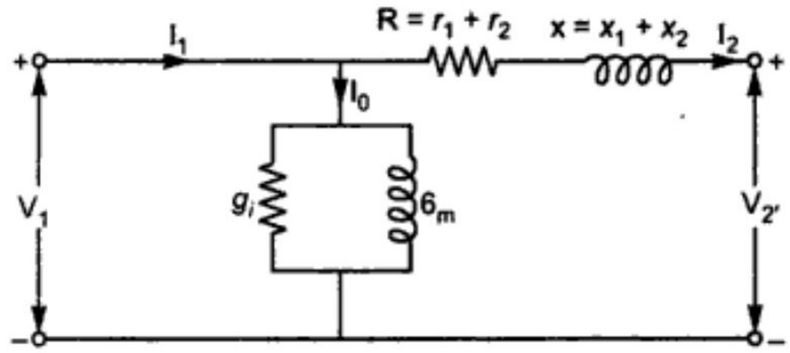

(*b*)

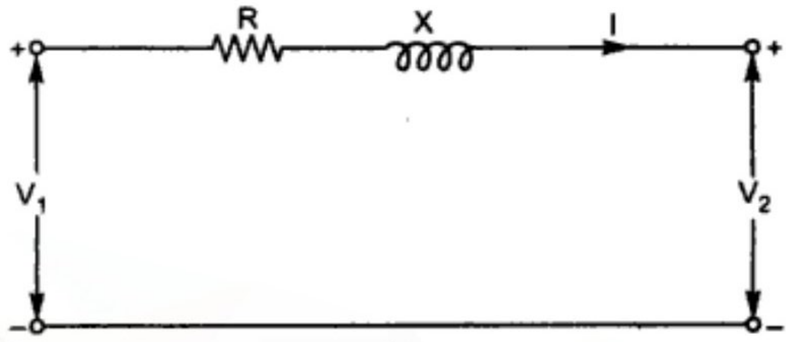

(*c*)

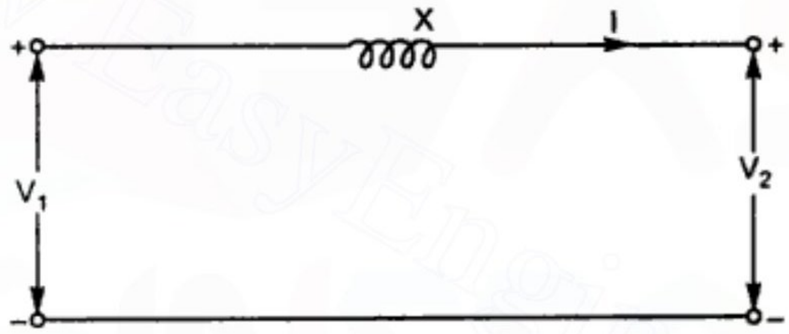

(*d*)

Fig. 10. *Approximate equivalent circuit of a transformer.*

$$\bar{V}_2 = \bar{V} - \bar{I}Z$$
$$\bar{V}_1 = V_2 + I(R + jX)$$

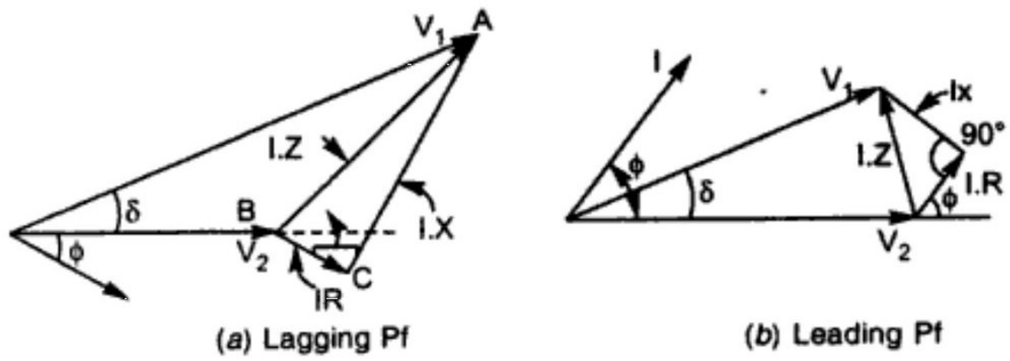

(*a*) Lagging Pf (*b*) Leading Pf

Fig. 11. *Phasor diagram of transformer for the approximate equivalent circuit.*

It is observed from these phasor diagrams that for the phase angle indicated

$$V_2 < V_1 \text{ for lagging power factor}$$

and

$$V_2 > V_1 \text{ for leading power factor}$$

Материал, защищенный авторским правом
Downloaded From : www.EasyEngineering.net

Downloaded From : www.EasyEngineering.net

In the phasor diagrams the angle δ is such that V_1 leads V_2. This is an indication of fact that power flows from side 1 to side 2 of the transformer this angle is quite small and is related to the value of the equivalent reactance , resistance of the transformer being negligible.

Name Plate Rating

The voltage ratio is specified as $\frac{V_1\,(\text{rated})}{V_2\,(\text{rated})}$. It means that when voltage V_1 (rated) is applied to the primary, the secondary voltage on full load at specified power factor is V_2 (rated). The ratio $\frac{V_1\,(\text{rated})}{V_2\,(\text{rated})}$ is not exactly equal to $\frac{N_1}{N_2}$ because of the voltage drops in the primary and secondary. These drops being small ;so neglected and it is assumed that for all practical purposes.

$$\frac{V_1\,(\text{rated})}{V_2\,(\text{rated})} = \frac{N_1}{N_2}$$

The rating of transformer is specified in units of VA or KVA or MVA depending on its size.

$$\text{KVA (rated)} = \text{V (rated)} \times \text{I (full load)}/1000$$

Where V and I are referred to one particular side.

The transformer name plate also specifies the equivalent impedance, but not actual ohm. It is expressed as the percentage voltage drop as:

$$\text{I (full load)} \times Z \times 100/\text{V (rated)}$$

Where all quantities must be referred to any one side.

Transformers Losses

The transformer has no moving parts so that its efficiency is much higher than of rotating machines. Following losses takes place in transformer:

1. *Core loss:* It consists of Hysteresis and eddy current losses resulting from alternations of magnetic flux in the core. The Core loss is constant for a transformer operated at constant voltage and frequency; as for all power transformer frequency kept constant.
2. *Copper loss :* This loss occurs in windings resistance when the transformers carries is load current, varies as the square of the loading expressed as a ratio of the full load.
3. *Load (Stray) loss:* It is Largely results from leakage fields inducing eddy-current in tank wall and conductors.
4. *Dielectric-loss:* The loss takes place in insulating material(dielectric material) particularly oil and solid insulation.

Power losses in the transformer is basically due to core loss or iron loss (constant) and copper loss (variable).

The above losses and parameters of equivalent circuit can be easily determined by two simple tests without actually load it.

Материал, защищенный авторским правом
Downloaded From : www.EasyEngineering.net

Downloaded From : www.EasyEngineering.net

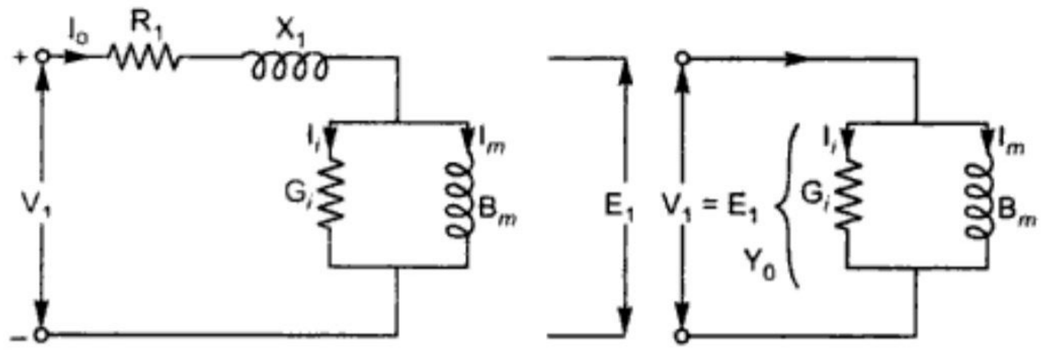

Fig. 13. *Equivalent circuit as seen on open circuit.*

So $$B_m = \sqrt{\left(Y_0^2 - G_i^2\right)}$$

where θ_o = no load power factor

$$\theta_o = \cos^{-1}\left(\frac{P_o}{V_o I_o}\right)$$

Short circuit test: In this test, one windings is short circuited across its terminals. For convenience of supply arrangement voltage and current to be handled the test is usually conducted from the HV side of the transformer while the LV side is short circuited as shown in Fig. 14. Since the transformer resistances and leakage resistance are very small so the voltage V_{sc} needed to circulate the short circuited current or full load current is very low *i.e.* 5-8% of the rated voltage. Though the choice of the winding to be short-circuited is usually determined by the measuring equipments available for us the test.

Therefore the exciting current under short circuit condition is only about 0.1 to 0.5% of the full load current (I_0 at the rated voltage is 2-6% of the full load current) so the shunt branch of the equivalent circuit can altogether be neglected giving the equivalent circuit of Fig. 15.

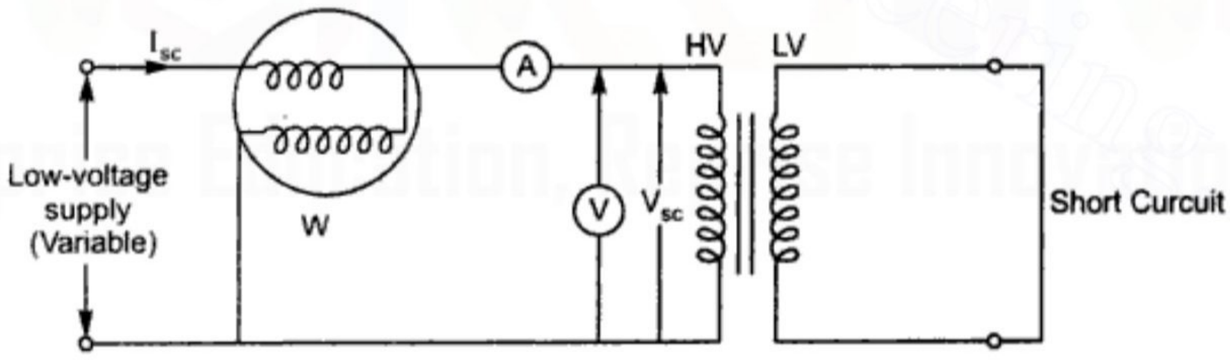

Fig. 14. *Circuit diaagram for short circuit test on transformer.*

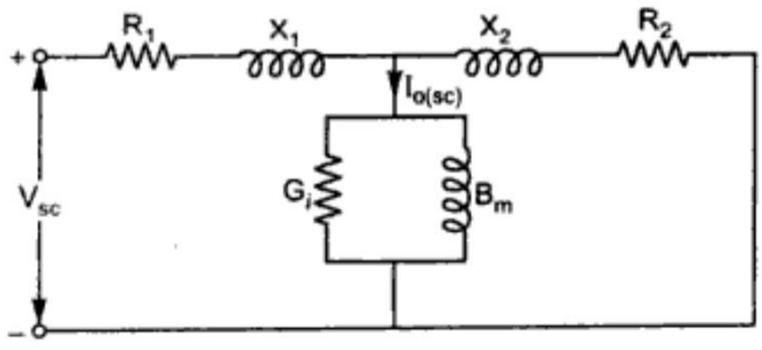

Fig. 15. *Equivalent circuit under short circuit condition as seen from the HV side.*

Urheberrechtlich geschütztes Material
Downloaded From : www.EasyEngineering.net

Downloaded From : www.EasyEngineering.net

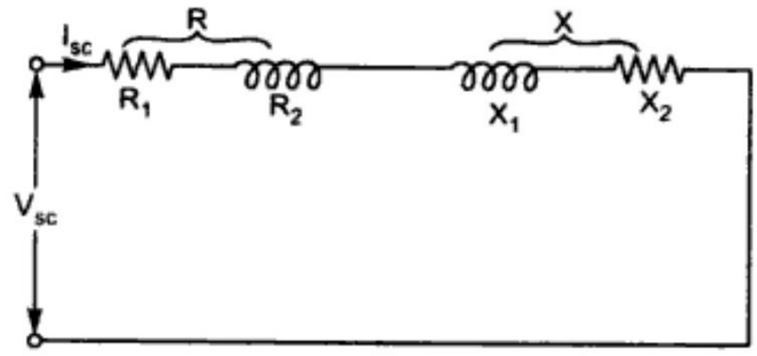

Fig. 16. *Equivalent circuit under short circuit condition.*

While conducting the SC test, the supply voltage is gradually raised from zero till the transformer draws full-load current (usually by Auto Transformer). The meter readings under these conditions are:

$$\text{Voltage} = V_{sc}$$

$$\text{Current} = I_{sc}$$

$$\text{Power input} = P_{sc}$$

Since the transformer is excited at very low voltage, the iron loss is neglected, the power input corresponds only to copper loss *i.e.*

$$P_{sc} = P_c = \text{Copper loss}$$

From equivalent circuit for Fig. T-16, the circuit parameters are computed as below:

$$Z = \frac{V_{sc}}{I_{sc}} = \sqrt{(R^2 + X^2)}$$

Equivalent resistance $\quad R = \dfrac{P_{sc}}{(I_{sc})^2}$

Equivalent reactance $\quad X = \sqrt{(Z^2 - R^2)}$

These values are referred to the side (HV) from which are test is conducted. If desired the values could be easily referred to the other side. The short circuit test gives the equivalent resistance and reactance of transformer. So OC and SC tests together give the parameter of the approximate equivalent circuit.

Sumpner's (Back to Back) Test: The OC and SC tests on a transformer yield its equivalent circuit parameters these cannot be used for the heat run test where in the purpose is to determine the steady temperature rise in the transformer was fully loaded continuously this is so because under each of these tests the power loss to which the transformer is subjected is either the core loss or copper loss but not both. While the by sumpner's test method without conducting an actual loading test found simultaneously on two identical transformers.

In the sumpner's test the primaries of the two transformers are connected in parallel across the rated voltage supply (V_1), while the two secondaries are connected in phase opposition as shown in Fig. 17. For the secondaries to be in phase opposition the voltage across T_2T_4 must be zero otherwise it will be double the rated secondary voltage in which case the polarity of one of the secondaries must be reversed. Current at low voltage (V_2) is injected into secondary circuit at T_2T_4.

Urheberrechtlich geschütztes Material
Downloaded From : www.EasyEngineering.net

Downloaded From : www.EasyEngineering.net

As per superposition Theorem if V_2 source is assumed shorted, the two transformers appear in open circuit to source V_1 as their secondaries are in phase opposition and therefore no current can flow in them. The current drawn from source V_1 is thus $2I_0$ and power is $2P_0$. When V_1 is regarded as shorted, the transformers are series connected across V_2 and are short circuited on the side of primaries. Therefore the impedance seen at V_2 is 2Z and when V_2 is adjusted to circulate full load current (I_{fl}). The power fed is $2P_c$ (twice the full load copper loss of each transformer). Thus in the Sumpner's test; while the transformers are not supplying any load full iron loss occurs in their cores and full. Copper loss occurs in their windings. Net power input to the transformers being $(2P_0 + 2P_c)$ .The heat run test could therefore be conducted on the two transformers while only losses are supplied.

In Fig. 17 the auxiliary voltage source is included in the circuit of secondaries, the test could also be conducted by including the auxiliary source in the circuit of primaries.

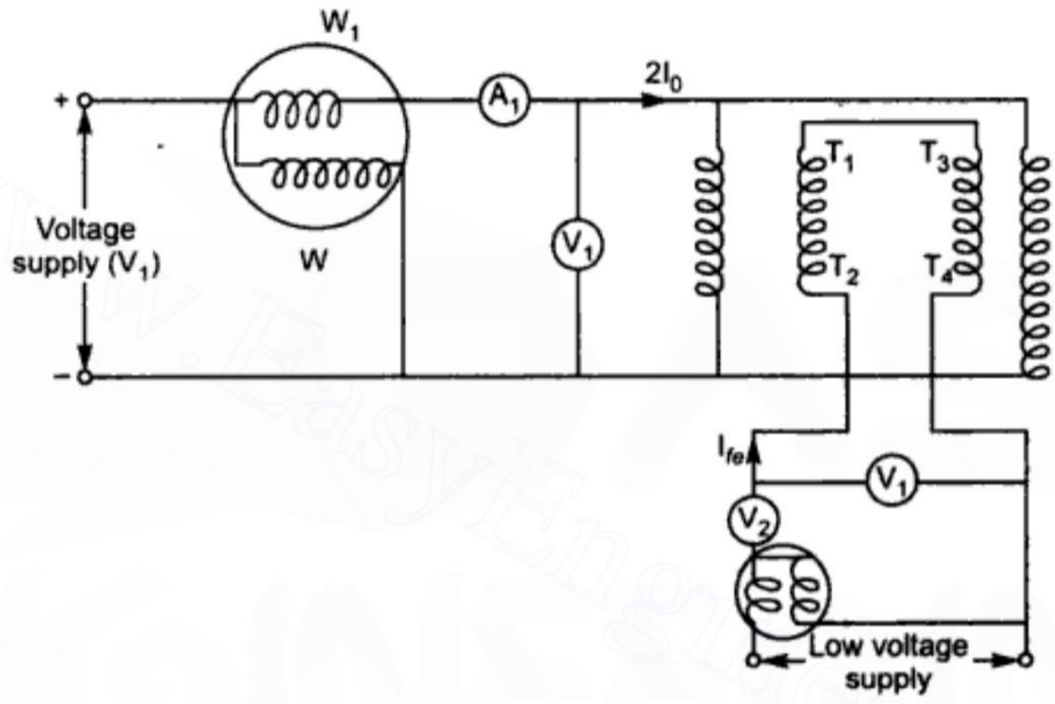

Fig. 17. *Sumpner's test on two identical single-phase transformers.*

Transformer Efficiency

Power and distribution transformers are designed to operate under condition of constant rms voltage and frequency. The total losses occurring in transformer under loaded condition can be divided with two groups:

1. Iron losses that occur in the magnetic core. These include Hysteresis and eddy current losses.
2. Copper losses occurring in the windings of transformer.

Iron losses are assumed as constant losses because the core flux is practically independent of load. Since the transformer is a static device, there are no rotational losses such as windage and frictional losses in a rotating machine.

The efficiency of a transformer is in the range of 96 – 99%.The efficiency of a transformer is defined as the ratio of the useful power output to the input power thus

$$\eta = \text{output/input}$$
$$= 1 - \text{losses/(output+losses)}$$

Urheberrechtlich geschütztes Material
Downloaded From : www.EasyEngineering.net

Downloaded From : www.EasyEngineering.net

$$= \text{Output}/(\text{output} + \text{losses})$$

The accurate method of determining efficiency would be to find the losses from open circuit test and short circuit test method.

$$\eta = \frac{V_2 I_2 \cos\theta_2}{(V_2 I_2 \cos\theta + P_i + P_c)}$$

where P_i = iron loss

$$P_c = \text{copper loss} = I_1^2 R_1 + I_2^2 R_2$$
$$= I_2^2 R_{eq(2)}$$

where $R_{eq(2)}$ = equivalent resistance referred to the secondary side. Thus it is found that Copper losses vary as the square of the load current.

$\cos\theta_2$ = load power factor.

V_2 = rated secondary voltage.

I_2 = load current.

So, efficiency can be given as

$$\eta = \frac{V_2 I_2 \cos\theta_2}{\left(V_2 I_2 \cos\theta_2 + P_i + I_2^2 R_{eq(2)}\right)}$$

above equation shows that for a given power factor, efficiency varies with load current. Therefore

$$\eta = \frac{V_2 \cos\theta_2}{\left[V_2 \cos\theta_2 + \left(\frac{P_i}{I_2 + I_2 R_{eq(2)}}\right)\right]}$$

For maximum value of efficiency "η" for given $\cos\theta_2$, the denominator of above equation must have the least value. The condition for maximum η obtained by differentiating the denominator and equating it to zero is

$$\frac{d}{dI_2}\left\{\frac{V_2 \cos\theta_2 + P_i}{I_2 + I_2 R_{eq(2)}}\right\} = 0$$

$$-\frac{P_i}{I_2^2} + R_{eq(2)} = 0$$

$$I_2^2 R_{eq(2)} = Pi$$

Hence, total Copper losses (variable) = Core loss (constant)

Hence the efficiency of the transformer is maximum at a load that makes the total copper losses equal to the core loss (constant losses).

"All-day" efficiency: The all day efficiency of a transformer is the ratio of the total energy output (kWh) in a 24-h a day to the total energy input in the same time. The distribution are normally operating on a varying load cycle, while the core losses are constant independent of the load.

Hence the efficiency of such transformers should be measured on the energy basis.

Urheberrechtlich geschütztes Material
Downloaded From : www.EasyEngineering.net

Downloaded From : www.EasyEngineering.net

$$\text{All day efficiency} = \frac{\text{Output in kilowatt-hours}}{\text{Input in kilowatt-hours}}$$

It is an important figure of merit for distribution transformers, which feed daily load cycle varying over a wide load range. Higher energy efficiencies are achieved by designing distribution transformers to yield maximum efficiency at less than full load. This is achieved by restricting. The core flux to lower values by using a relatively larger core cross section.

Voltage Regulation

Generally all the loads are designed to operate practically at constant voltage. It is therefore necessary that the output voltage of a transformer must stay within a normal limits as the load and its power factor vary. The load terminal voltage changes because of the voltage drop in the leakage reactance of the transformer. Therefore the voltage regulation is used to determine the voltage drop/change characteristic of the transformer.

Voltage regulation is defined as the change in magnitude of the secondary voltage, when full load of specified power factor supplied at rated voltage in thrown off *i.e.* reduced to no load with primary voltage and frequency held constant, as percentage of the rated load terminal voltage.

In term of symbols

$$\% \text{ Voltage regulation} = \left(\frac{V_{20} - V_{2,fl}}{V_{2,fl}}\right) \times 100$$

where V_{2fl} = rated secondary voltage while supply full load at specified power factor.

V_{20} = Secondary voltage when loads is thrown off.

Fig. 18 shows the transformer equivalent circuit referred to the secondary side and Fig. 19 gives its phasor diagram. The voltage drops IR and IX are very small in a well designed transformer. As a result the angle δ between V_1 and V_2 is of negligible order , so that

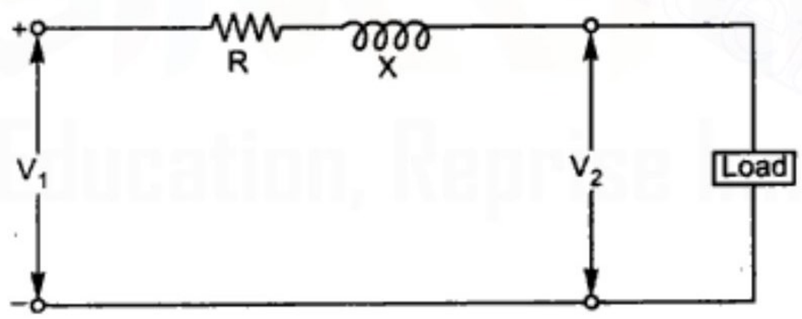

Fig. 18. *Approximate equivalent circuit referred to secondary.*

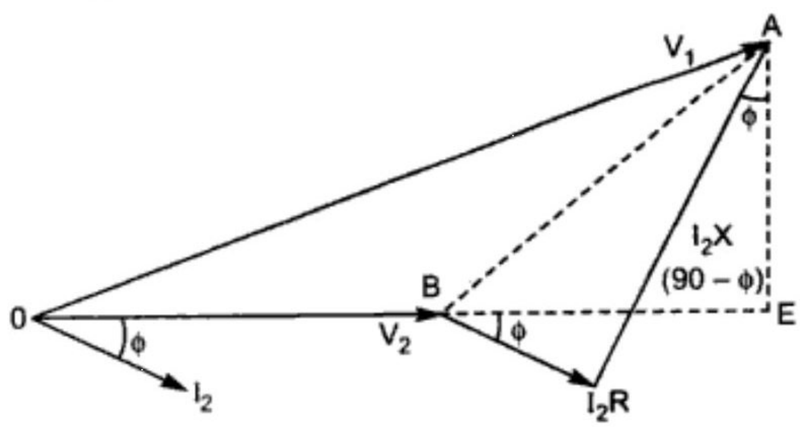

Fig. 19. *Phasor diagram.*

Urheberrechtlich geschütztes Material
Downloaded From : www.EasyEngineering.net

Downloaded From : www.EasyEngineering.net

Hysteresis loss $= 693.7 \times \frac{2}{3} = 462.4$ W

Eddy current loss $= 693.7 \times \frac{1}{3} = 231.2$ W

As both primary voltage and frequency are increased in same ratio, flux density will be constant.

New value of hysteresis loss $= (462.4)\left(\frac{80}{50}\right)$

$= 739.84$ W

New value of eddy current loss

$$= 231.2 \times \left(\frac{80}{50}\right)^2$$

$$= 231.2 \times 2.56 = 591.872 \text{ W}$$

Total core (Iron loss) at 430 V and 80 Hz

$$= 739.84 + 591.87$$

$$= 1331.71 \text{ W}$$

Example 8: *At 340 V and 50 Hz, the total core loss of a transformer was found to be 1800 W. When the transformer is supplied at 180 V and 26 Hz, the core loss is 600 W. Calculate the hysteresis and eddy current loss at 340 V and 50 Hz.*

Solution : $\frac{V_1}{f_1} = \frac{340}{50} = 6.8$

and $\frac{V_2}{f_2} = \frac{180}{26} = 6.8$

Since $\frac{V_1}{f_1} = \frac{V_2}{f_2} = 6.8$

So, flux density remain constant. Hence,

$$\frac{P_i}{f} = x + yf$$

$\therefore$ $$\frac{1800}{50} = x + 50y \quad \text{... (i)}$$

and $$\frac{600}{26} = x + 25y \quad \text{... (ii)}$$

On solving equation (*i*) and equation (*ii*)

$$x + 50y = 36.00$$
$$\underline{x} + \underline{26y} = \underline{30.76}$$
$$50y - 26y = 36.00 - 30.76$$
$$24y = 5.24$$

Copyrighted material
Downloaded From : www.EasyEngineering.net

Downloaded From : www.EasyEngineering.net

Also, $$\frac{N_1}{N_2} = \frac{V_1}{V_2} = \frac{330}{540} = 0.62$$

Voltage in low voltage side

$$V_{1\,(sc)} = V_{2\,(sc)} \times \frac{N_1}{N_2} = 30 \times \frac{330}{540} = 18.4 \text{ V}$$

Primary full load current (*l.v.* side)

$$\Rightarrow \qquad I_{1\,sc} = I_{2\,(sc)} \times \frac{N_2}{N_1} = 12 \times \frac{540}{330} = 19.64 \text{ A}$$

Now, power during short-circuited condition

$$P_{i\,(sc)} = I^2_{1\,(sc)}\, R_{e_1}$$

$$R_{e_1} = \frac{P_{i\,(sc)}}{I^2_{1\,(sc)}} = \frac{90}{(19.64)^2} = \frac{90}{385.540} = 0.234\ \Omega.$$

$$Z_{e_1} = \frac{V_{1\,(sc)}}{I_{1\,(sc)}} = \frac{18.40}{19.64} = 0.9368\ \Omega.$$

Therefore, $$X_{e_1} = \sqrt{Z^2_{e_1} - R^2_{e_1}} = \sqrt{(0.936)^2 - (0.234)^2}$$

$$= \sqrt{0.8776 - 0.0547}$$

$$= \sqrt{0.8229} = 0.907\ \Omega.$$

From above obtained parameters, the equivalent circuit can be drawn as

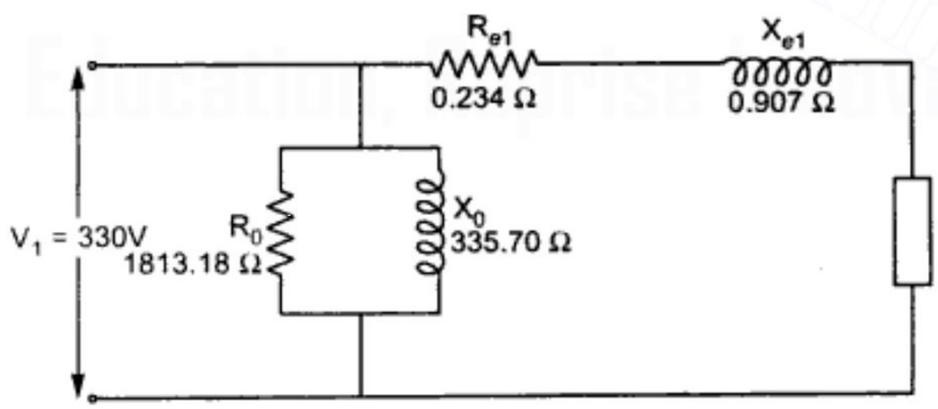

Example 10: *A transformer is rated at 120 KVA. At full load operated condition its copper loss is 1000 watts and its core loss is 940 watts. Determine the following :*

(i) the efficiency at full load and unit power factor

(ii) the efficiency at half load, 0.8 power factor

(iii) the efficiency at 80% full load and 0.7 power factor

(iv) the load KVA at which maximum efficiency will occur

(v) the maximum efficiency at 0.85 power factor.

Copyrighted material
Downloaded From : www.EasyEngineering.net

Downloaded From : www.EasyEngineering.net

Solution : P = 120 KVA = 120×10^3 VA

$$P_{ifl} = 1000 \text{ W}, P_i = 940 \text{ W}.$$

So, efficiency is given by

$$\eta = \frac{mP\cos\phi_2}{mP\cos\phi_2 + P_i + m^2 P_{ifl}}$$

where, $$m = \frac{\text{load (Given)}}{\text{full load}}$$

(*i*) At full load condition $m = 1$ and $\cos\phi_2 = 1'$

$$\eta = \frac{1 \times 120 \times 10^3 \times 1}{1 \times 120 \times 10^3 \times 1 + 940 + (1)^2 \times 1000}$$

$$= \frac{120 \times 10^3}{120 \times 10^3 + 940 + 1000}$$

$$= \frac{120 \times 10^3}{120 \times 10^3 + 1940} = \frac{120 \times 1000}{121940}$$

$$= 0.984 = 98.4\%$$

(*ii*) At half loaded condition,

$$m = \frac{1}{2} \text{ . } \cos\phi_2 = 0.8$$

Efficiency at half load

$$\eta = \frac{\frac{1}{2} \times 120 \times 10^3 \times 0.8}{\frac{1}{2} \times 120 \times 10^3 \times 0.8 + 940 + \left(\frac{1}{2}\right)^2 \times 1000}$$

$$= \frac{60 \times 1000 \times 0.8}{60 \times 10^3 \times 0.8 + 940 + 250} = \frac{60 \times 1000 \times 0.8}{60 \times 1000 \times 0.8 + 1190}$$

$$= \frac{48 \times 1000}{48 \times 1000 + 1190} = \frac{48000}{49190} = 0.975$$

$$= 97.5\%.$$

(*iii*) Given, $\cos\phi_2 = 0.7$

Now, at 80% of full load

$$m = \frac{80}{100} = 0.8$$

Copyrighted material
Downloaded From : www.EasyEngineering.net

Downloaded From : www.EasyEngineering.net

Voltage regulation $= \frac{I_2}{V_2}\left[R_{e_2} \cos \phi + X_{e_2} \sin \phi\right]$

$$= \frac{10.5}{330}\left[1.451 \times 0.8 + 4.535 \times 0.6\right]$$

$$= 0.03\ [1.1608 + 2.721] = 0.1164 \text{ Pu.}$$

or, 1.164%.

Copyrighted material
Downloaded From : www.EasyEngineering.net

Downloaded From : www.EasyEngineering.net

12

Three Phase Induction Machine

Introduction

The most commonly and widely used motor in any industry is induction motor. The induction motor is a.c. operated machine and very much similar to transformer in its operation and construction. Induction motors are more rugged, require less maintenance and are less expensive than d.c. machine of equal kilo watt and speed ratings. It is widely used for industrial drive due to low cost, efficient and reliable. It has good speed regulation and high starting torque. It has a reasonable overload capacity. Like other electrical rotating machine, an induction machine can also be used as an induction generator, if the rotor is rotated by a primemover. However, induction generators have restricted applications as a source of power supply. Induction motors are called generalised transformer because both depends upon Faraday's law of electromagnetic induction for its operation and both have same equivalent circuit and phaser diagram. The only difference is that induction motor has rotating part but transformer is static device.

Construction of Induction Machine

Three-phase induction motor consists of two main parts namely stator which is stationary part and the rotor which is rotating part of induction motor. The rotor is placed inside the stator and is supported on both the side by two end-shields which house the bearings. The stator is built up of high grade alloy steel lamination to reduce the eddy current losses. The laminations are slotted on the inner periphery and are insulated from each other. Energy is supplied to the stator. Energy is transferred to the rotor windings through electromagnetic induction and hence such machines are called iduction motors.

Rotor is one of the important part of induction motor. It is also built up of thin laminations of the same material as stator. The rotor core is a laminated steel cylinder having slots in which aluminium conductors are die-cast or copper conductors are wound parallel to the shaft. The stator windings are made from three separate windings and are insulated from each other and displaced in space by 120° electrical.

Stator frame and yoke are also very important part of induction motor as they support and give proper stand to the motor. Stator frame supports the stator and the yoke give proper stand to motor.

Types of Rotor : As per construction point of view, the rotor of three phase induction motors are classified in two category.

(*i*) Cage rotor and

(*ii*) Slip ring or wound rotor.

Copyrighted material
Downloaded From : www.EasyEngineering.net

Downloaded From : www.EasyEngineering.net

Cage Rotor : The rotor aluminium conductors in a squirrel cage induction motor does not need any insulation from the rotor-core, as the current will flow through the parts of minimum resistance that is through the rotor conductors. The rotor bars are shorted at both the rotor ends by end-rings. The slots of rotor are not made parallel to the rotor shaft but are skewed at a certain angle with the shaft to reduce the magnetic noise during motor operation, to produce a more uniform torque and prevent the possible magnetic locking. The magnetic locking is also termed as cogging. During cogging the rotor and stator teeth attract each other due to magnetic effect, so there is no rotation of rotor.

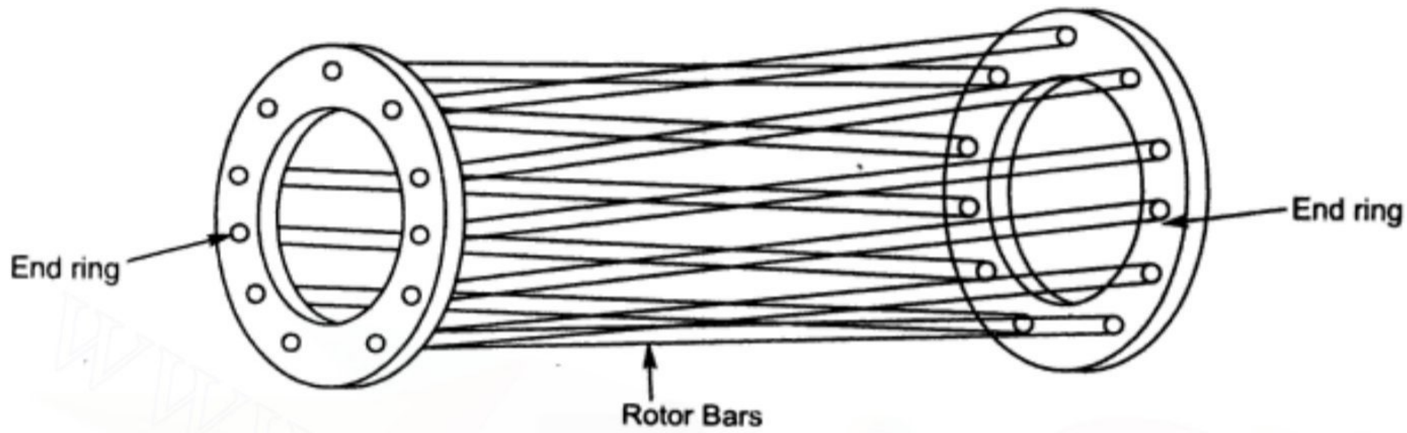

Fig. 1. *Cage rotor (Slightly skewed)*

Slip Ring or Wound Rotor : The rotor winding is made on the insulated rotor slots with copper conduct similar to the stator winding. The stator windings are connected in star. The three free ends are brought to the three slip rings mounted on the shaft. Slip rings are also insulated from the rotor shaft. The external resistance can be connected with the rotor winding through brush and slip-ring connection. The external resistance provides the facility to increase the starting torque and decrease the starting current. It also helps in controlling the speed of three phase induction motor.

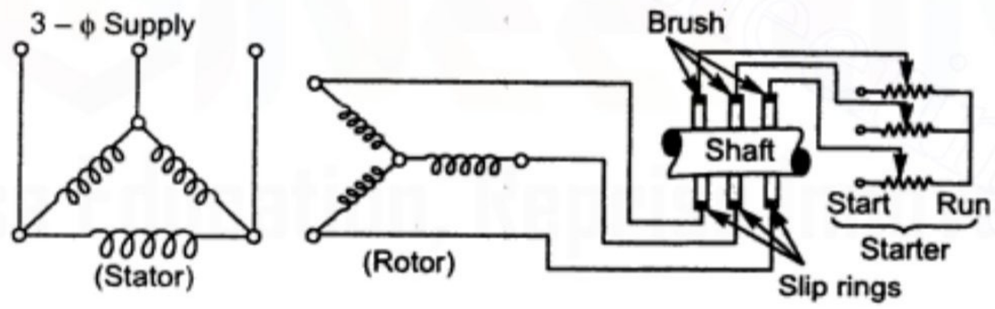

Fig. 2. *Wound rotor induction motor.*

Difference between Cage Rotor and Slip-ring Induction Motor

Cage Rotor	*Slip-ring or Wound Rotor*
1. Robust in construction and low cost	1. Bulky due to presence of brush and high cost
2. Requires less maintenance	2. Regular maintenance is needed.
3. Absence of brush eliminate the chances of sparking	3. Sparking takes place due to brush
4. Highly efficient and high power factor	4. Less efficient and low power factor than cage rotor.
5. Low startingtorque and higher starting current than wound rotor	5. High starting torque and low starting current.
6. External resistance can not be added. So, fail to control the speed.	6. External resistance can be added to rotor circuit in order to control the speed.

Material com direitos autorais
Downloaded From : www.EasyEngineering.net

Downloaded From : www.EasyEngineering.net

Working Principle of a Three-phase Induction Motor

As it is discussed earlier in construction that the induction motor is essentially consists of two parts one is stator and the other is rotor. The three phase supply is feded to the three phase stator winding. The rotor gets its excitation through electromagnetic induction. When three phase supply is connected across the stator terminal, a rotating magnetic field, constant in magnitude but rotating at synchronous speed is produced. The speed of rotating field so produced depends upon the supply frequency and the number of poles for which the winding is made. The expression for frequency and synchronous speed is given by

$$f = \frac{PN_S}{120}$$

$$N_S = \frac{120f}{P}$$

where $N_S \rightarrow$ synchronous speed

$P \rightarrow$ Number of poles

$f \rightarrow$ supply frequency

When three phase current is given to the stator winding rotating magnetic field is produced in the air gap between rotor and stator. The rotor winding cuts the rotating field and an emf is induced in the rotor winding, when the rotor is at rest, the frequency of this emf is same as the supply frequency. If the rotor circuit is closed, a current flows in the rotor winding. The current in the rotor winding produces an mmf which rotates and is induced in opposition to stator mmf. The interaction of the stator and the rotor fields produces a torque which causes the rotor to rotate in the direction of the stator field. The relative movement between the stator field and the rotor conductors is ultimately reduced due to slip. The induced emf, current and frequency are reduced. The torque remains unidirectional because the rotor mmf, although now rotating at a slower speed relative to the stator viz., synchronous speed.

Production of Rotating Field

The three phase winding is displaced in space by 120° and the current supplied is displaced in time by 120°. When this 3-phase current supplied to 3-phase stator winding, a magnetic flux is produced which rotated in space.

Let the instantaneous fluxes be given by

$$\phi_1 = \phi_m \sin wt$$

$$\phi_2 = \phi_m \sin (wt - 120°)$$

$$\phi_3 = \phi_m \sin (wt + 120°)$$

Consider the figure shown below :

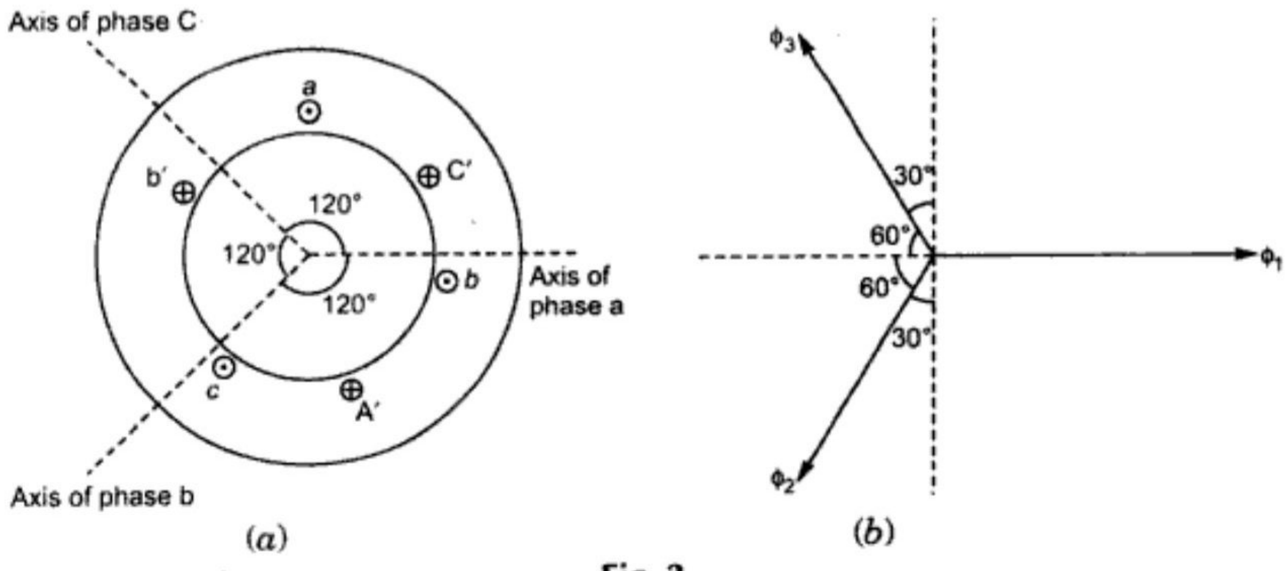

Fig. 3

Material com direitos autorais
Downloaded From : www.EasyEngineering.net

Downloaded From : www.EasyEngineering.net

The resultant flux produced by this system may be determined by resolving the horizontal and vertical components with respect to the physical axes as shown in Fig. 3(*b*).

The resultant vertical component of flux is given by

$$\phi_v = 0 - \phi_2 \cos 30° + \phi_3 \cos 30°$$

$$= \cos 30° \, [-\phi_m \sin (wt - 120°) + \phi_m \sin (wt + 120°)]$$

$$= \frac{\sqrt{3}}{2} \phi_m \, [-(\sin wt \cos 120° - \cos wt \sin 120°) + (\sin wt \cos 120° + \cos wt \sin 120°)]$$

$$= \frac{\sqrt{3}}{2} \phi_m (2 \cos wt \sin 120°) = \frac{\sqrt{3}}{2} \phi_m \times 2 \cos wt \times \frac{\sqrt{3}}{2}$$

$$\phi_v = \frac{3}{2} \phi_m \cos wt \qquad \text{... (1)}$$

Now, resolving the resultant horizontal component of flux is given by

$$\phi_h = \phi_1 - \phi_2 \cos 60° - \phi_3 \cos 60°$$

$$= \phi_1 - (\phi_2 + \phi_3) \cos 60°$$

$$= \phi_1 - \frac{1}{2}(\phi_2 + \phi_3)$$

$$= \phi_m \sin wt - \frac{1}{2} [\phi_m \sin (wt - 120°) + \phi_m \sin (wt + 120°)]$$

$$= \phi_m \sin wt - \frac{\phi_m}{2} (\sin wt \cos 120° - \cos wt \sin 120° + \sin wt \cos 120° + \cos wt \sin 120°)$$

$$= \phi_m \sin wt - \frac{\phi_m}{2} \times \left(2 \sin wt \left(-\frac{1}{2}\right)\right)$$

or,

$$\phi_h = \frac{3}{2} \phi_m \sin wt \qquad \text{... (2)}$$

The component ϕ_v and ϕ_h are shown below :

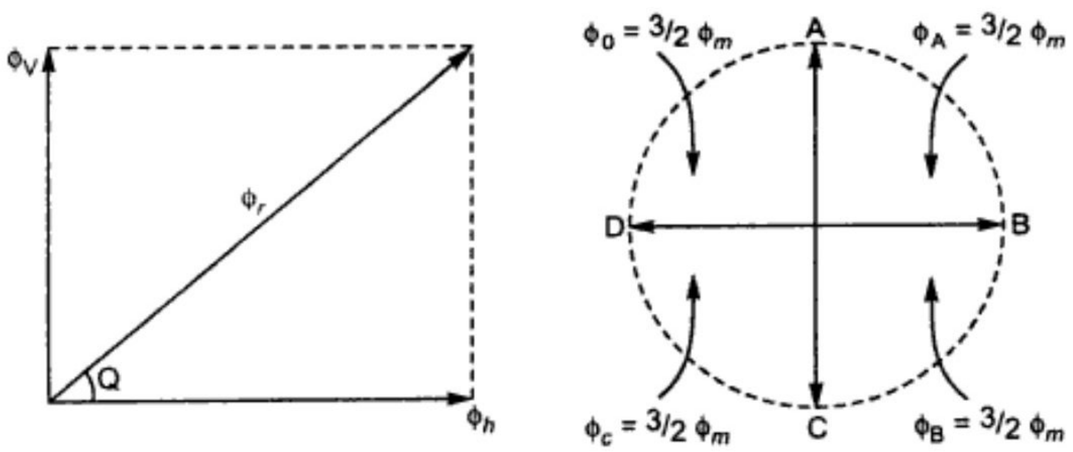

Fig. 4

Now, the total resultant flux

$$\phi_r = \sqrt{\phi_v^2 + \phi_h^2} = \sqrt{\left(\frac{3}{2} \phi_m \sin wt\right)^2 + \left(\frac{3}{2} \phi_m \cos wt\right)^2}$$

Material com direitos autorais
Downloaded From : www.EasyEngineering.net

Downloaded From : www.EasyEngineering.net

$$= \frac{3}{2}\phi_m \sqrt{\sin^2 wt + \cos^2 wt}$$

or,
$$\phi_r = \frac{3}{2}\phi_m \quad \text{... (3)}$$

Also,
$$\tan\theta = \frac{\phi_v}{\phi_h} = \frac{\frac{3}{2}\phi_m \cos wt}{\frac{3}{2}\phi_m \sin wt}$$

$$= \cot wt = \tan\left(\frac{\pi}{2} - wt\right)$$

$\therefore$
$$\theta = \frac{\pi}{2} - wt \quad \text{... (4)}$$

Therefore from equation (4) it can be concluded that

(*i*) When $wt = 0°$ at that time $\theta = 90°$ and position A is achieved as shown in figure (*d*).

(*ii*) When $wt = 90°$, $\theta = 0$ and position B is achieved.

(*iii*) When $wt = 180°$, $\theta = -90$ and position C is achieved.

(*iv*) When $wt = 270°$, $\theta = -180°$ and position D is achieved.

Slip : The speed of the rotor relative to that of the stator rotating field is called slip. In other words the difference between synchronous speed and the rotor speed is also known as slip. It is usually expressed as a fraction of the synchronous speed. In usual practice slip is expressed either as per unit or as a percentage of synchronous speed.

$$\text{Per Unit Slip} = \frac{\text{Synchronous Speed } (N_s) - \text{Rotor Speed } (N_r)}{\text{Synchronous Speed } (N_s)}$$

and percentage slip
$$= \frac{N_s - N_r}{N_s} \times 100$$

The value of slip at full-load varies from about 6 percent for small motors to about 2 percent for all large motors.

At stand still the rotor speed is zero and so slip will be

$$S = \frac{N_s - N_r}{N_s}$$

as
$$N_r = 0$$
$$S = 1$$

The rotor cannot run at synchronous speed because then there will be no rotor emf and no rotor current and torque. If rotor is required to run at synchronous speed then some external driving torque is compulsory. If the rotor speed becomes greater than synchronous speed *i.e.*, $N_r > N_s$, the slip becomes negative, the rotor torque opposes the external driving torque and the machine starts acting as induction generator.

EMF and Current in Induction Motor

The voltage applied to each phase is constant and purely sinusoidal and alternating in nature at frequency f_1, the flux per pole ϕ is sinusoidally distributed in space around the air gap and is rotating at synchronous speed and the stator and rotor should posses same number of poles and phases.

Material com direitos autorais
Downloaded From : www.EasyEngineering.net

Downloaded From : www.EasyEngineering.net

At stand still condition, the emf induced in each phase of stator and rotor is given by

$$E_1 = 4.44\, K_{b1}\, K_{p1} f_1 N_1 \phi \quad \text{... (i)}$$

$$E_2 = 4.44\, K_{b2}\, K_{p2} f_1 N_2 \phi \quad \text{... (ii)}$$

where,

E_1 = emf induced per phase in stator volts

E_2 = emf induced per phase in rotor volts

ϕ = flux per pole in weber

f_1 = supply frequency in Hz

N_1 and N_2 = number of turns in series per phase of the stator and rotor respectively.

K_{b1}, K_{b2} = breadth factor of stator and rotor winding respectively.

K_{p1}, K_{p2} = pitch factor of stator and rotor winding respectively.

At standstill condition the frequency of emf induced in the rotor is same as supply frequency.

The rotor current can be obtained at two different cases depending upon the condition of slip.

(*i*) At standstill conditions

Let E_{20} = emf induced for phase of rotor at standstill.

R_2 = Resistance per phase of the rotor.

X_{20} = Reactance per phase of the rotor at standstill.

$= 2\pi f_1 L_2$

At standstill condition the rotor frequency is equal to the supply frequency.

Z_{20} = rotor impedance per phase at standstill

I_{20} = rotor current per phase at standstill

So,

$$Z_{20} = R_2 + JX_{20} \quad \text{... (i)}$$

$$I_{20} = \frac{E_{20}}{Z_{20}} \quad \text{... (ii)}$$

Power factor at standstill condition is

$$\cos \phi_2 = \frac{R_2}{Z_{20}} = \frac{R_2}{\sqrt{R_2^2 + X_{20}^2}} \quad \text{... (iii)}$$

(*ii*) Current in Rotor at some slip S :

The induced emf for phase in the rotor winding at slip S is

$$E_{2S} = SE_{20}$$

Rotor winding resistance per phase = R_2

Rotor winding reactance per phase at slip S is

$$X_{2S} = 2\pi f_2 L = 2\pi (Sf_1) L = SX_{20}$$

Rotor winding impedance for phase at slip S is

$$Z_{2S} = R_2 + JX_{2S} = R_2 + JSX_{20}$$

Rotor current at slips is

Material com direitos autorais
Downloaded From : www.EasyEngineering.net

Downloaded From : www.EasyEngineering.net

$$I_{2S} = \frac{E_{2S}}{Z_{2S}}$$

Power factor at slip S is

$$\cos \phi_{2S} = \frac{R_S}{Z_{2S}}$$

where the subscript 2, 0 and S represents rotor standstill condition and at some slip S.

Frequency of Rotor Voltage and Current

The frequency of Rotor winding is of variable nature but the frequency of stator winding is same as that of the supply frequency and it is given by

$$f = \frac{PN_s}{120} \quad \ldots (i)$$

The rotor frequency depends upon the slip. At the standstill condition the rotor frequency is same as that of the supply frequency. The rotor frequency depends upon the difference between the synchronous speed and the rotor speed and the slip at that instant and is given by :

$$f_r = \frac{P(N_s - N_r)}{120} \quad \ldots (ii)$$

Dividig equation (*ii*) by equation (*i*), we get

$$\frac{f_r}{f} = \frac{P(N_s - N_r)/120}{PN_s/120} = \frac{N_s - Nr}{N_s}$$

$$\frac{f_r}{f} = s$$

$$f_r = sf \quad \ldots (iii)$$

Therefore, rotor current frequency = per unit slip × supply frequency

when the rotor is at standstill

$$N_r = 0$$

$$s = \frac{N_s - N_r}{N_s} = 1 \text{ and } f_r = f$$

Induction Motor : A Generalised Transformer

The induction motors are also known as generalised transformer due to the following facts :

The emf equation of transformer is given by

$$E = 4.44 \,.\, f \,.\, N \,.\, \phi$$

and Emf equation of induction motor is

$$E_1 = 4.44 \,.\, K_{b1} K_{p1} f_1 N_1 \phi$$

and

$$E_2 = 4.44 \,.\, K_{b2} \,.\, K_{p2} f_1 N_2 \phi$$

So, the emf equation of transformer and induction motors are similar, the only difference is that due to rotating part in induction motor, the extra term pitch factor and breadth factor is

Material com direitos autorais
Downloaded From : www.EasyEngineering.net

Downloaded From : www.EasyEngineering.net

$$T_d = \frac{\text{Rotor power developed}}{\text{Angular velocity of rotor}} \text{ in Newton-Metre.}$$

where $W_R = \frac{2\pi NR}{60}$ rad/sec.

N_R = rotor speed in RPM at which powér is developed.

Stator Circuit Diagram

Let R_S = Stator phase winding resistance

X_S = Leakage reactance of stator phase winding

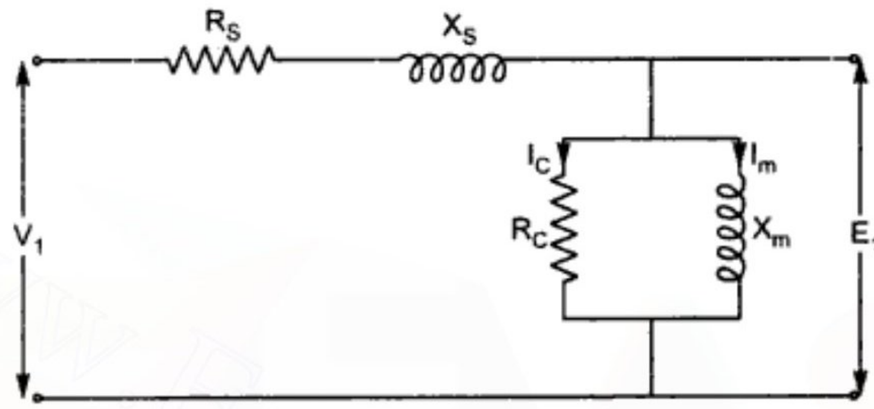

Fig. 6

The stator equivalent diagram of induction motor on per phase bars is given below :

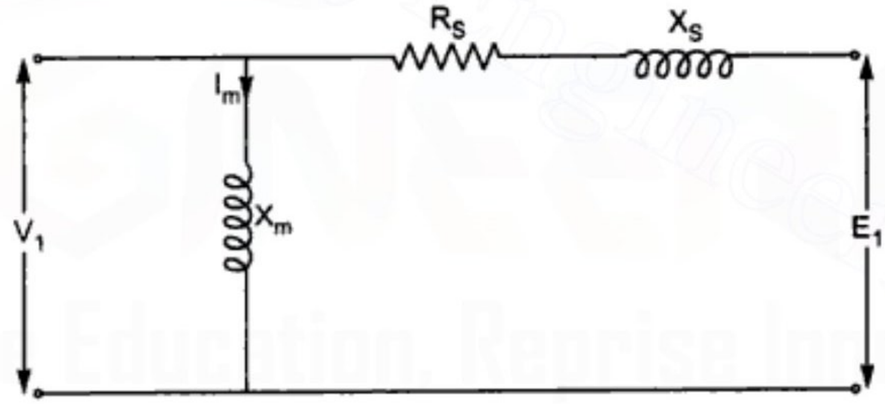

Fig. 7

Equivalent circuit diagram of induction machine on a per phase basis referred to stator is given below :

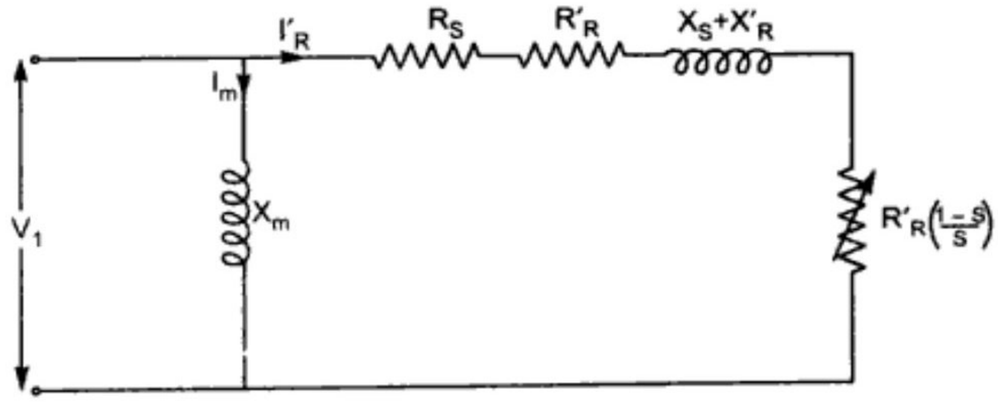

Fig. 8

Material com direitos autorais
Downloaded From : www.EasyEngineering.net

Downloaded From : www.EasyEngineering.net

At light loads (small slip), the resistor representing the mechanical power $R_R^1 \frac{(1-S)}{S}$ is large. Hnece I_R^1 is small as compared to magnetising current I_m. Hence the circuit behaves pargely inductive as X_m is the dominating element in the circuit and therefore power factor is small.

Determination of Equivalent Circuit Parameters

(*i*) **No Load Test:** The motor is run with incompled load and with rated voltage supplied to the stator which is shown below in Fig. 9.

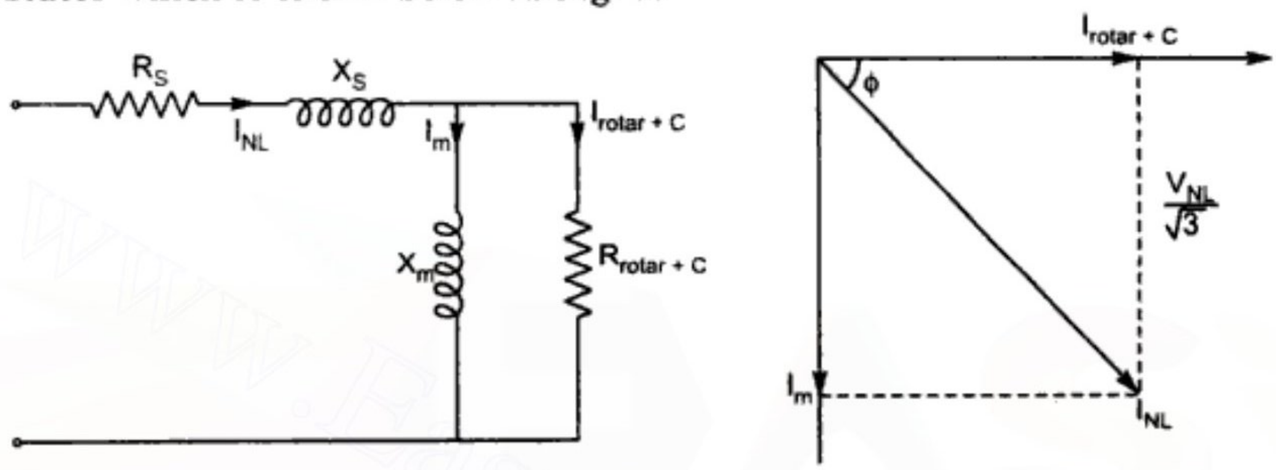

Fig. 9

V_{NL} = Line to line stator voltage at no load

I_{NL} = Line current at no-load

P_{NL} = Three phase power input at no load.

So, Input–power = $P_C + P_{roter} + 3I_2N_LR_S$

where P_C = core loss

P_{roter} = friction and windage loss

Hence, $P_{roter} + C = P_{NL} - 3I_2N_LR_S$

$\therefore$ Magnetising reactance $X_m = \frac{V_{NL}}{\sqrt{3}\, I_{NL}}$

(*ii*) **Blocked Rotor Test:**

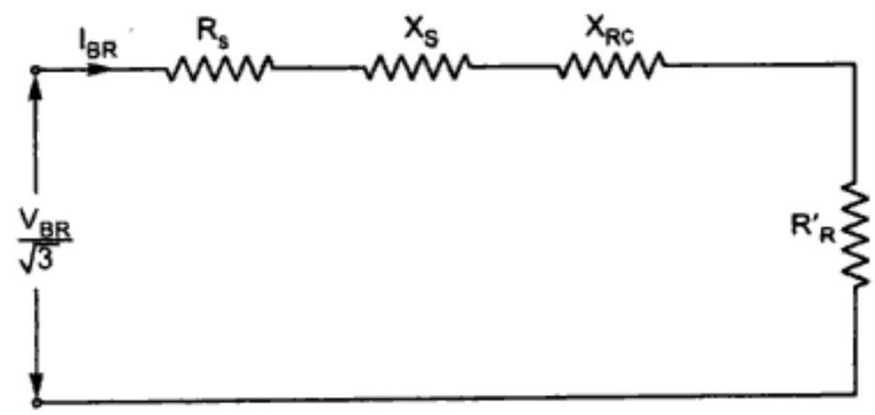

Fig. 10

In this blocked rotor test the rotor is blocked externally by some means and prevent rotor from turning.

Hence, $N_R = 0$ and ultimately at standstill $s = 1$

Material com direitos autorais
Downloaded From : www.EasyEngineering.net

Downloaded From : www.EasyEngineering.net

Therefore, $T \propto V_1^2$

By this obtained result equ. (*iii*) can be written as

$$T \propto \frac{SE^2R_2}{R_2^2 + S^2X_{20}^2}$$

or,
$$T = \frac{K\,SE^2R_2}{R_2^2 + S^2X_{20}^2} \quad ...(iv)$$

Torque- slip characteristics: The torque equation is given as

$$T = \frac{K\,SE^2R_2}{R_2^2 + (SX_{20})^2}$$

where R_2 and X_{20} are rotor resistance and reactance per phase respectively and k_1 is proportionately constant.

when $s = 0$, $T = 0$ and hence the torque slip curve starts from origin *i.e.* zero.

At normal speeds, close to the synchronous speed SX_{20} will be small and is negligible with respect to rotor resistance R_2.

Therefore, $T \propto S$, where R_2 and the supply voltage is constant.

Since $S \propto T$, for low value of slip, torque-slip curve is approximately a straight line. As slip increases the torque also increases and becomes maximum when $S = \frac{R_2}{X_{20}}$ when the slip further increases with increases in motor load, then rotor resistance R_2 becomes negligible compared to SX_{20}. Therefore, larger values of slip.

So, we get

$$T \propto \frac{S}{(SX_{20})^2} \times \frac{1}{S}$$

Hence, the curve obtain following above condition will be a rectangular hyperbola.

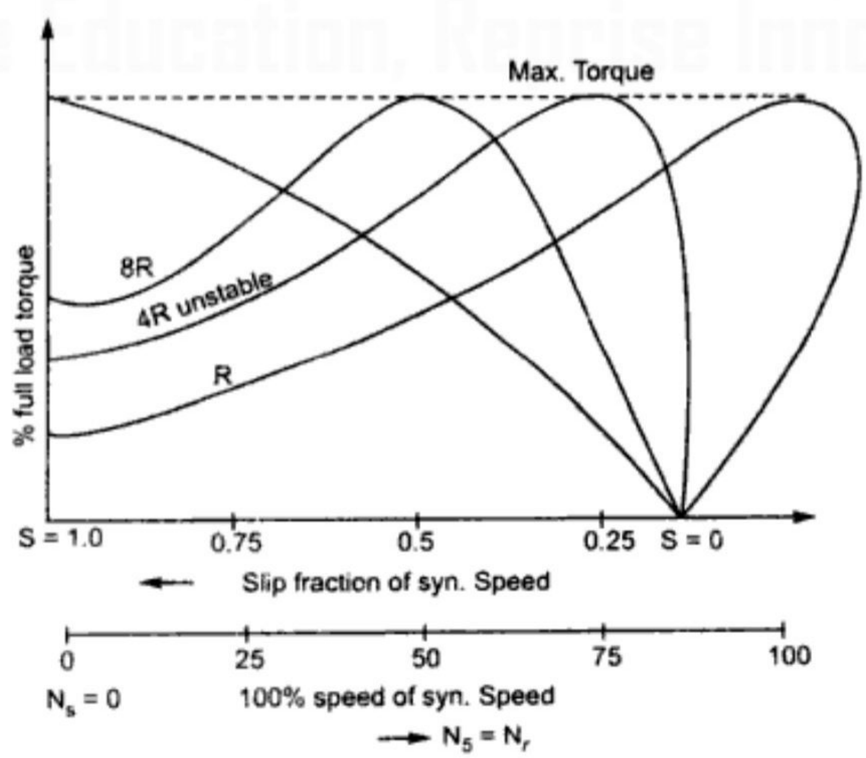

Fig. 12

Material com direitos autorais
Downloaded From : www.EasyEngineering.net

Downloaded From : www.EasyEngineering.net

The torque-slip characteristics of three phase induction motor works three different modes *i.e*,

(*i*) **Motering mode :** At synchronous speed $s = 0$, this results torque to be zero. When the speed is near to synchronous speed, the slip in very small and the term $(SX_{20})^2$ in torque equation becomes negligible as compared to the rotor resistance R_2.

Therefore,

$$T = \frac{K_1 S}{R_2}$$

when R_2 is constant,

$$T = K_2 S \qquad ...(i)$$

when $$K_2 = \frac{K_1}{R_2}$$

above equation conclude that the torque is proportional to the slip. Hence, when the slip is small, the torque-slip curve will be a straight line. In this condition the motor will be in motering mode.

(*ii*) **Generating Mode:** In this mode of operation, the slip gradually increases with the increase in load with the increase in the term $(SX_{20})^2$, so that R_2^2 term in torque equation become negligible and ultimately neglected.

Therefore, $$T = \frac{K_3 R_2}{(SX_{20})^2}$$

This, torque becomes inversely proportional to the slip towards the stand still conditions. In this mode the torque-slip curve is represented by a rectangular hyperbola. This mode of operation is generating mode.

(*iii*) **Braking Mode:** when the torque decreases from the point of maximum torque resulting in decrease in the speed of rotation and finally motor slops, then it can be said that motor is working in Braking mode.

Torque speed-characteristics can be drawn as below including the above mentioned mode of operation is

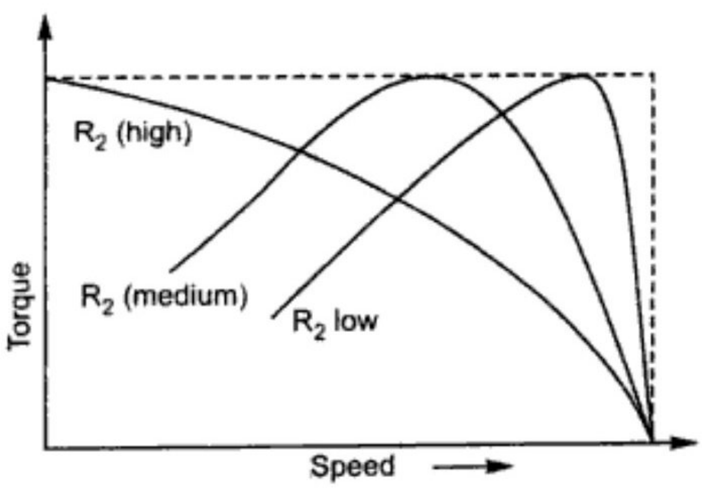

Fig. 13

Material com direitos autorais
Downloaded From : www.EasyEngineering.net

Downloaded From : www.EasyEngineering.net

Also,

$$\frac{\text{Starting torque with star-delta starting}}{\text{Starting torque with direct switching in delta}} = \frac{\left(\frac{V_L}{\sqrt{3}}\right)^3}{V_L^2} \qquad ...(ii)$$

Here, the starting torque with star-delta starter is reduced to one-third with direct switching in delta.

Now,

$$\frac{\text{Starting torque with star-delta starting}}{\text{Full-load torque with stator winding in delta}} = \left(\frac{\left(Ipst(Y)^2 \cdot \frac{R_2}{1}\right)}{2\pi n_s}\right) \div \left[\frac{I_{pfl(\Delta)}}{2\pi n_s} \cdot \frac{R_2}{S_{fl}}\right]$$

$$= \left[\frac{I_{pst(\Delta)}}{I_{pfl(\Delta)}}\right] S_{fl}.$$

where, $I_{pfl(\Delta)}$ = full-load phase current with winding in delta.

But
$$I_{pst(Y)} = \frac{\frac{V_L}{\sqrt{3}}}{Z_{e10}}$$

$$I_{pst(\Delta)} = \frac{V_L}{Z_{e10}}$$

$\therefore$
$$I_{pst(Y)} = \frac{1}{\sqrt{3}} I_{pst(\Delta)}$$

$$I^2_{pst(Y)} = \frac{1}{3} I^2_{pst(\Delta)}$$

$$\frac{\text{Starting torque with star-delta starting}}{\text{Full-load torque with stator winding in delta}}$$

$$= \left(\frac{I_{pst(Y)}}{I_{pfl(\Delta)}}\right)^2 S_{fl} = \frac{1}{3}\left[\frac{I_{pst(\Delta)}}{I_{psl(\Delta)}}\right] S_{fl}$$

(*ii*) **Direct on-line starting :** In this method of starting of squirrel cage motor, the full voltage is connected across the stator terminals, large current is drawn by the windings. This is due to the reason that, at starting the induction motor behaves as a short circuited transformer with its secondary, i.e., rotor seperated from the primary *i.e.*, the stator by a small air-gap.

The connection diagram for direct in-line starting is shown in Fig. 15(*a*).

Material com direitos autorais
Downloaded From : www.EasyEngineering.net

Downloaded From : www.EasyEngineering.net

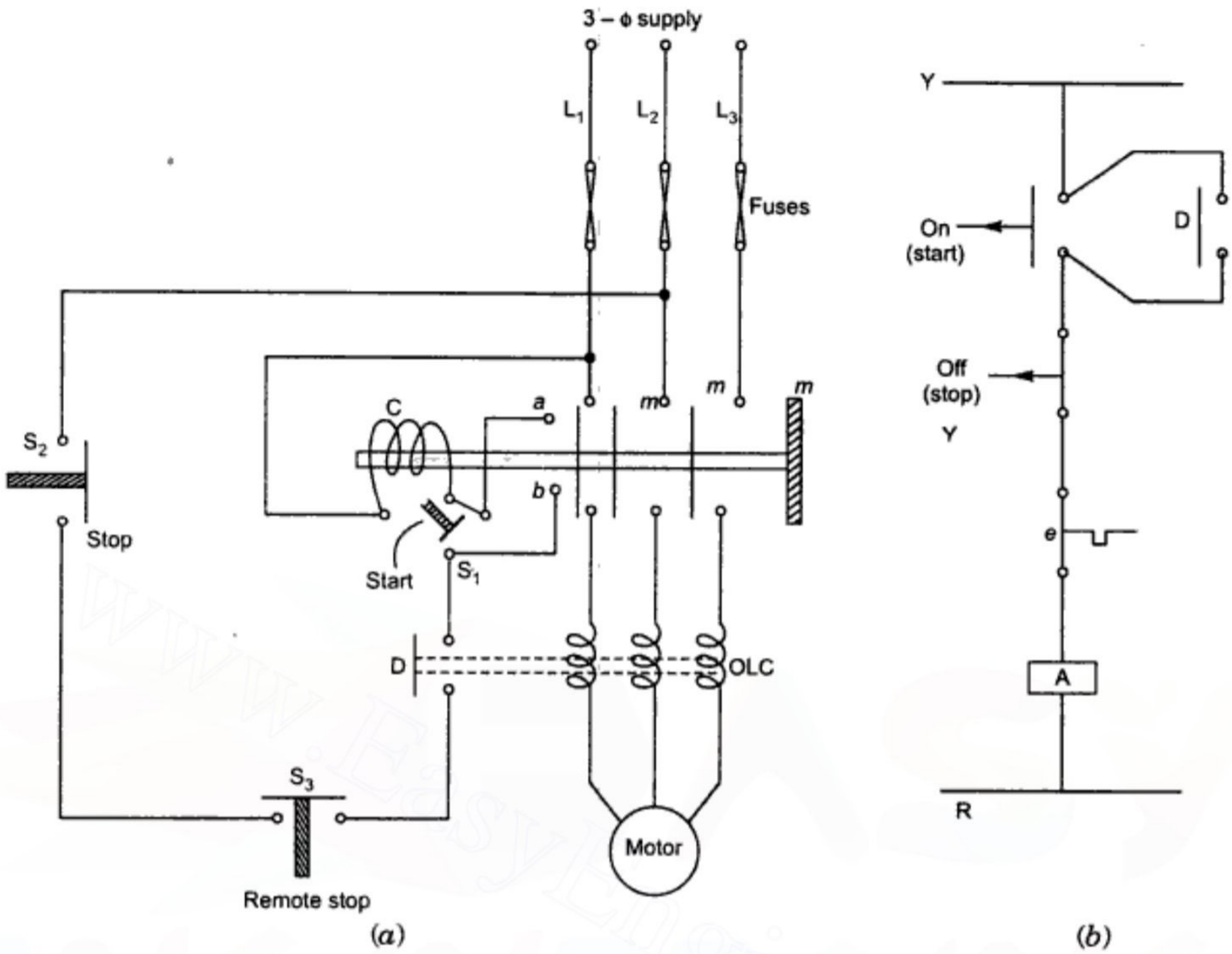

Fig. 15. *Schematic diagram of circuit.*

Auto Transformer Starting

An auto-transformer with different tappings at a voltage lower than the rated voltage is used for starting a three induction motor.

During starting a low voltage is applied through the least tap. As the motor picks up speed, the tap position is switched over to higher voltage tap position.

Theory of auto transformer starting : An auto transformer starter consists of an transformer and a switch as shown in fig. 6.

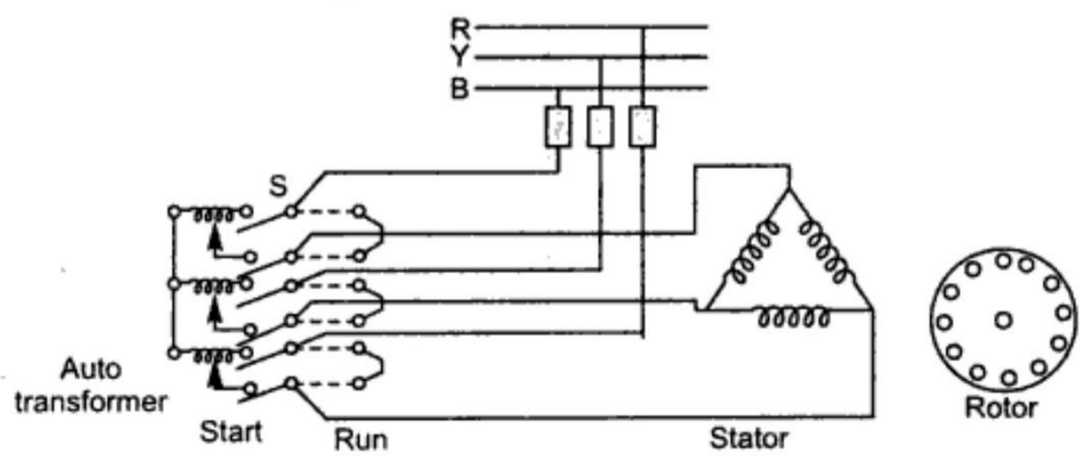

Fig. 16. *A manual Auto transformer starter.*

Material com direitos autorais
Downloaded From : www.EasyEngineering.net

Downloaded From : www.EasyEngineering.net

when switch s is put on start position, a reduced voltage is applied across the motor terminals. when the motor picks up speed nearly 80 percent of its normal speed, the switch is put to RUN position. Then the auto transformer is cut out of the circuit and full rated voltage gets applied across the motor terminal. Normally two or three voltage steps are used during starting and then the auto transformer is completely cut out from the circuit.

Let I_s be the starting current with direct starting, If the full load current and n be the transformation ratio of auto transformer. As the voltage applied to each phase is reduced to $\frac{1}{n}$ of the line voltage. So,

$$\text{Current in each phase of motor} = \frac{I_s}{n}$$

$$\text{Line current} = \frac{\text{Motor current}}{\text{Transformation ratio}}$$

$$i.e., \text{ line current} = \frac{1}{n^2} . I_s$$

Therefore, starting torque

$$= \text{Full load torque} \left(\frac{\text{Motor starting current}}{\text{Full load current}}\right)^2$$

$$= \text{Full load torque} \left(\frac{\frac{I_s}{n}}{I_f}\right)^2$$

$$= \frac{1}{n^2} \times \text{Starting torque (direct starting)}$$

Speed Control of Three Phase Induction Motor

The speed of rotor of 3 – ϕ induction motor is given by

$$N_r = (1 - S) N_s \quad ...(i)$$

and

$$N_s = \frac{120 f}{P} \quad ...(ii)$$

Therefore, putting the value of equ. (*ii*) in equation. (*i*), the rotor speed becomes

$$N_r = (1 - S) \frac{120 f}{P} \quad ...(iii)$$

where, N_r = Speed of rotor in rpm

S = Slip of Induction motor

P = No. of poles of Induction motor

f = Supply frequency

From equation (*iii*) it is seen that the speed of 3 – ϕ induction motor can be controlled by controlling or changing the supply frequency, no. of poles and slip.

Material com direitos autorais
Downloaded From : www.EasyEngineering.net

Downloaded From : www.EasyEngineering.net

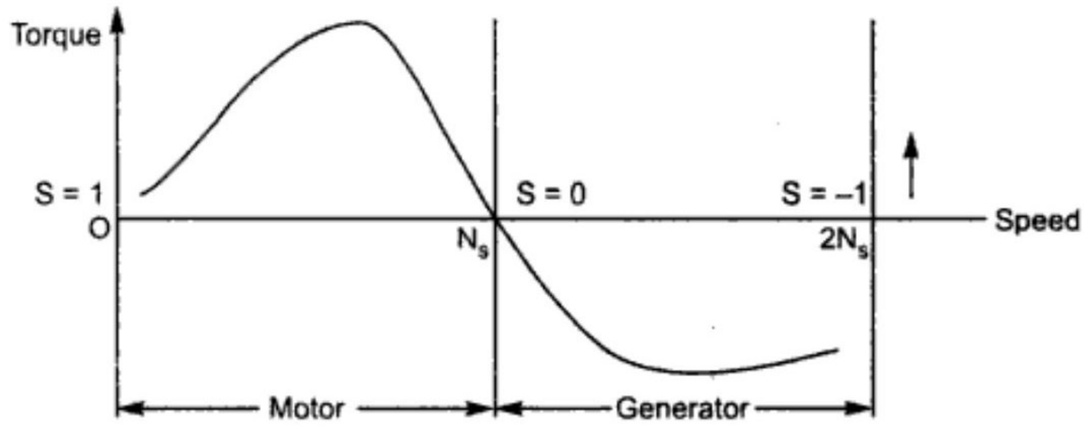

(Characteristics of Induction Generator)

Fig. 18

SOLVED NUMERICAL PROBLEMS

Example 1: *A 6-pole, 3-phase, 50 Hz induction motor has rotor resistance 0.03 ohm and reactance 0.14 ohm respectively per phase. Calculate speed at maximum torque. What resistance is to be added to give $\frac{3}{4}$ maximum torque at starting?*

Solution : Number of poles = 6 poles

Supply frequency = 50 Hz

$$\therefore \quad N_s = \frac{120f}{P} = \frac{120 \times 50}{60} = 100 \text{ rpm.}$$

$$R_2 = 0.03\ \Omega\ ;\ X_2 = 0.14\ \Omega.$$

The condition for maximum torque is

$$R_2 = S_m X_2$$

$$\therefore \quad S_m = \frac{R_2}{X_2} = \frac{0.03}{0.14} = 0.21$$

Speed at maximum torque

$$N = (1 - S_m) N_1$$
$$= (1 - 0.2) \times 1000 = 800 \text{ rpm.}$$

If $T_{st} = \frac{3}{4}$ maximum torque, then the relation between T_{st} and T_{max} is

$$\frac{T_{st}}{T_{max}} = \frac{2n}{1 + n^2}$$

where, $n = \frac{R_2 + r}{T_{max}}$ and r = resistance to be added.

$$\therefore \quad \frac{2n}{1 + n^2} = \frac{3}{4}$$

or, $$n^2 - 8n + 3 = 0$$

Material com direitos autorais
Downloaded From : www.EasyEngineering.net

Downloaded From : www.EasyEngineering.net

(a) Number of poles

(b) Full-load slip and rotor frequency

(c) Speed of stator field with respect to

(i) stator structure and

(ii) rotor structure

(d) Speed of rotor field with respect to

(i) stator structure and

(ii) rotor structure

Solution : (*a*) Using formulae

$$N_s = \frac{120f}{P}$$

$$1480 = \frac{120 \times 50}{P}$$

$$P = \frac{120 \times 50}{1480} = 4.05$$

Number of poles must be even so, number of poles will be either 4 or 6.

(*b*) Synchronous speed

$$N_s = \frac{120f}{P} = \frac{120 \times 50}{4} = 1500 \text{ rpm.}$$

$\therefore$ Slip $$s = \frac{N_s - N_r}{N_s} = \frac{1500 - 1480}{1500} = 0.014$$

Rotor frequency, $$f_2 = sf_1$$
$$= 0.014 \times 50 = 0.7 \text{ Hz.}$$

(*c*) (*i*) Speed of stator field w.r.t. stator structure

$$= N_s = 1500 \text{ rpm.}$$

(*ii*) Speed of stator field *w.r.t.* rotor structure

$$1500 - 1480 = 20 \text{ rpm}$$

(*d*) (*i*) Speed of rotor field w.r.t. stator structure

= (Mechanical speed of rotor) + (Speed of rotor field w.r.t. rotor structure)

$$= 1480 + 21 = 1501 \text{ rpm.}$$

(*ii*) Speed of rotor field w.r.t. rotor structure

$$= \frac{120 \times (\text{rotor frequency})}{\text{Poles}} = \frac{120 \times 0.7}{4} = 21 \text{ rpm.}$$

Example 4: *A 8 pole induction motor is fed from 50 Hz supply. If the rotor emf frequency at full load is 4 Hz. Calculate the full load slip and speed.*

Solution : $f_1 = 50$ Hz and $f_2 = 4$ Hz

Rotor frequency is

$$f_2 = sf_1$$
$$4 = s \times 50$$

Material com direitos autorais
Downloaded From : www.EasyEngineering.net

Downloaded From : www.EasyEngineering.net

$$s = \frac{4}{50} = 0.08$$

and also
$$N_s = \frac{120f}{P} = \frac{120 \times 50}{8} = 750 \text{ rpm}$$
$$N_r = N_s(1 - s)$$
$$= 750\,(1 - 0.08) = 690 \text{ rpm.}$$

Example 5: *A 6-pole, 3-phase, 420 V, 50 h.p., 50 Hz star connected induction motor has the following parameter per phase :*

$$r_1 = 1.2\,\Omega \qquad x_1 = 0.25\,\Omega$$
$$r'_2 = 0.14\,\Omega \qquad x'_2 = 0.30\,\Omega$$

The stator core losses equals 1200 W, friction and windage losses are equal to 850 W. The no-load current is 16 amperes at P.f. of 0.08 lagging, when the motor is operating at a slip of 0.028, calculate

(a) Input line current and power factor
(b) Torque developed by motor
(c) Horse power output
(d) Efficiency.

Solution :

(a) $V_1 = \frac{420}{\sqrt{3}} = 242.49 \angle 0 \text{ V}$

$$I'_2 = \frac{V_1}{r_1 + \frac{r_2'}{s} + J(x_1 + x'_2)} = \frac{242.4 \angle 0}{\left(0.12 + \frac{0.14}{0.028}\right) + J(0.25 + 0.30)}$$

$$I'_2 = \frac{242.4\angle 0}{5.12 + j(0.55)}$$
$$I_0 = 16 \angle -85$$
$$= I_1 = I_2' + I_0$$

(b) Rotor copper loss

$$= 3\,(I_2')^2\, r_2' = 3$$

Example 6: *A 6 pole, 3-phase, 230 V induction motor develops a torque of 18.37 N-m when the stator current is 60 A. Find the stator current and torque if the stator voltage is reduced to 130 V.*

Solution : We obtain earlier that torque is directly proportional to V_1^2

Therefore, new value of torque

$$= 18.37\left(\frac{130}{230}\right)^2 = 5.87 \text{ N-m}$$

The stator current
$$= 60 \times \frac{130}{230}$$
$$= 33.9 \text{ Amperes.}$$

Material cu drept de autor
Downloaded From : www.EasyEngineering.net

Downloaded From : www.EasyEngineering.net

frequency of rotor emf =

$$f_2 = 0.06 \times 50 = 3 \text{ Hz}$$

(*c*) Rotor input = 200 – 10 = 190 kW

$$\text{Rotor copper loss} = s \times \text{Rotor input}$$
$$= 0.06 \times 190 = 11.4 \text{ kW}$$

(*d*) Motor output = 190 – 11.4 – 5

$$= 190 - 16.4 = 173.6 \text{ kW}$$

$$\text{Efficiency of motor} = \frac{\text{Motor output}}{\text{Motor input}} = \frac{173.6}{200}$$
$$= 0.868 = 86.8\%.$$

Example 11: *A 3-phase, 50 Hz, 420 V 4-pole star connected induction motor has following equivalent circuit parameters and stator losses is 3 kW.*

$$R_0 = 110 \text{ ohm}, \quad X_0 = 22 \text{ ohm}$$
$$r_1 = 0.2 \text{ ohm}, \quad x_1 = 0.5 \text{ ohm}$$
$$r_2' = 0.3 \text{ ohm}, \quad x_2 = 0.5 \text{ ohm}.$$

The full load slip is 0.04. Calculate :

(*a*) *motor speed*
(*b*) *stator current at no-load*
(*c*) *stator current at full-load*
(*d*) *motor input at full-load*
(*e*) *rotor copper losses*
(*f*) *motor output and efficiency.*

Solution : (*a*) $N_r = N_s(1 - s)$

and
$$N_s = \frac{120f}{P}$$
$$N_r = \frac{120f}{P}(1 - s) = \frac{120 \times 50}{4}(1 - 0.04)$$
$$N_r = 1500 \times 0.96 = 1440 \text{ rpm}$$

(*b*) Stator voltage per phase $= \dfrac{420}{\sqrt{3}} = 230.94$ V

No load current

$$I_0 = \frac{V_1}{R_0 + JX_0} = \frac{230.94}{110 + J22}$$
$$= 1.86 \angle -10.3° \text{ A}$$

(*c*) $$I_2' = \frac{V_1}{r_1 + Jx_1 + Jx_2' + \dfrac{r_2'}{s}} = \frac{230.94}{0.2 + J0.5 + J0.5 + \dfrac{0.3}{0.04}}$$

$$I_2' = 42.73 \angle -10.09° \text{A}$$

Stator current at full load

Material com direitos autorais
Downloaded From : www.EasyEngineering.net

Downloaded From : www.EasyEngineering.net

$= I_0 + I_2'$

Motor power factor

$= \cos(-10.09) = 0.89$ lagging.

(*d*) Motor Input $= \sqrt{3} \times 420 \times 42.73 \times 0.89$

$= 27664.3$ Watts

$= 27.66$ kW.

(*e*) Stator losses = 3 kW

Rotor Input $= 27.66 - 3$

$= 25.66$ kW.

Rotor copper loss $= 0.04 \times 25.66 = 1.026$ kW.

(*f*) Motor output $= 25.66 - 1.026 - 3$

$= 25.66 - 4.02 = 21.64$ kW

Motor efficiency $= \dfrac{21.64}{25.66} = 0.843 = 84.3\%$.

EXERCISES

1. Describe the construction and working of a 3-ϕ induction motor.
2. Why 3-ϕ induction motors are called as 'Generalised Transformer' ?
3. Compare cage and wound 3-phase induction motor.
4. What do you understand by 'slip' in an induction motor ?
5. Derive an expression for the frequency of rotor current in an induction motor.
6. Explain the reason why an induction motor does not run at synchronous speed.
7. Why the power factor of a 3-phase induction motor is lagging ?
8. What is a star-delta stator ?
9. What are the various method of starting of three phase induction motor ? Explain in brief.
10. Why the rotor core loss is negligible in 3-ϕ induction motor ?
11. Explain torque-slip characteristics of 3-ϕ induction motor.
12. Draw and explain phasor diagram of a three phase motor.
13. Derive equation for torque developed in an induction motor.
14. Explain various methods of testing of 3-ϕ induction motor. How are the parameters of equivalent circuit determined from the test results ?
15. What do you understand by 'slip energy recovery' ?
16. Draw the equivalent circuit of 3-ϕ induction motor also specify the various circuit parameters.
17. Why starters are necessary for induction motor starting ? Name different starting methods for 3-phase induction motors.
18. Discuss briefly the various methods of speed control of 3-phase induction motors.

Material com direitos autorais
Downloaded From : www.EasyEngineering.net

Downloaded From : www.EasyEngineering.net

19. Explain in brief :

(*i*) Motoring mode
(*ii*) Generating mode
(*iii*) Braking mode

With respect to torque-slip characteristics.

20. What is an induction generator ?

21. If an 8-pole induction motor running from a supply of 50 H has an induced emf in the rotor frequency 1.3 Hz, determine the slip and speed of the motor.

22. Calculate the speed of a 4-pole induction motor having a slip of 5% at full load with a supply frequency of 50 Hz. What will be the speed of a 2-pole alternator supplying the motor?

23. A 4-pole, 50 Hz induction motor runs with a slip of 0.01 P.u. in full load. Calculate the frequency of the rotor current :

(*a*) at stand still and
(*b*) On full load.

24. A 4-pole induction motor runs at 1450 rpm at a frequency of 50 Hz supply. Find the percentage slip and the frequency of rotor current.

25. A 3-phase, 200 V induction motor has 4-poles. Find the rotor speed if

(*a*) frequency is 60 Hz and slip is 0.05
(*b*) frequency is 50 Hz and slip is 0.04.

26. A 6-pole, 50 Hz, 3-phase induction motor has a rotor resistance of 0.02 Ω per phase and the stand still reactance of 0.5 Ω per phase. Determine the speed at which the maximum torque is developed.

27. A 3-phase, 6 pole, 400 V, 50 Hz induction motor has a speed of 930 r.p.m. in full load. Calculate the slip. How many complete alternations will the rotor voltage make per minute ?

28. A 3-phase, 6-pole, 40 hp, 380 V star connected induction motor has the following parameters :

$$r_1 = 0.2\ \Omega\ ;\quad x_1 = 0.25\ \Omega$$
$$r_2' = 0.12\ \Omega\ ;\ x_2' = 0.3\ \Omega.$$

At no-load the motor. The stator core losses are 1100 W and rotational losses are 850 W. If slip is 2.3%, find

(*a*) Input line current
(*b*) Power factor
(*c*) Developed torque
(*d*) Efficiency

29. A 3-phase, 60 Hz, 6-pole induction motor has a full load slip of 0.04. Find frequency of rotor current at the instant of starting and at full load.

30. A 4-pole, 3-phase, 240 V, 50 Hz induction motor has the following parameters of its circuit model referred to stator side are

$$r_1 = 1.3\ \Omega,\quad x_1 = 1.2\ \Omega$$
$$r_2' = 0.4\ \Omega,\quad x_2' = 1.2\ \Omega$$
$$X_m = 25\ \Omega$$

Rotational losses are 800 W.

Material com direitos autorais
Downloaded From : www.EasyEngineering.net

Downloaded From : www.EasyEngineering.net

13

Single Phase Induction Motor

Introduction

The single-phase motors are manufactured in fractional Kilowatt range to be operated on single-phase supply and for use in several application like fans, washing machines, refrigerators, blowers, centrifugal pumps etc., Again single phase induction motors in very small sizes $\left(\frac{1}{300} \text{ to } \frac{1}{20} \text{ hp}\right)$ are used in toys, hair dryers, vending machines etc. The a.c. series motor, also known as universal motor is very widely used in portable tools, vacuum cleaners and various kitchen equipments. Single phase motors are less satisfactory compare to three phase induction motor and it operates at low power factor.

Single Phase Induction Motor

A single phase induction motor is similar to that of three phase induction motor in physical appearance. The single phase induction motor has a distributed single phase winding while in case of 3-ϕ induction motor, the stator has distributed three phase windings. The performance characteristics of single phase induction motor is less satisfactory than three phase motors. The three phase supply is given to 3-ϕ induction motor. If one phase of 3-ϕ induction motor is opened during the running condition with moderate load, it is observed that the motor continues to run at slightly lower speed.

By opening one of the phase from three phase, the three phase motor becomes single phase motor.

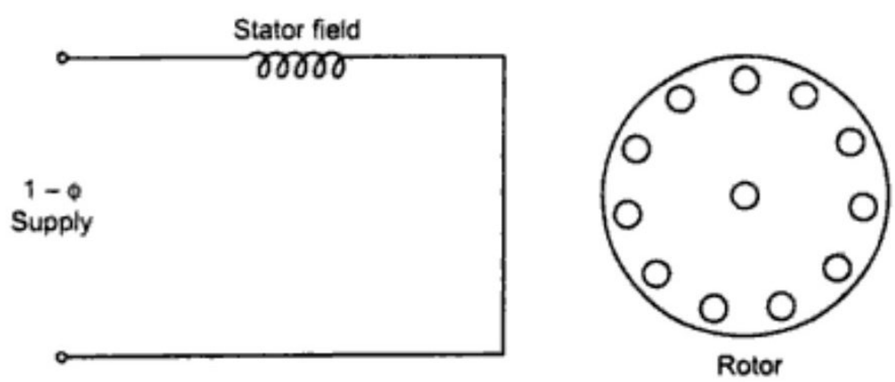

Fig. 1. *Single phase induction motor*

Material com direitos autorais
Downloaded From : www.EasyEngineering.net

Downloaded From : www.EasyEngineering.net

(Conditions in 1-ϕ induction motor during starting) the rotor has short circuited cage winding and the stator and rotor is magnetically coupled having uniform air gap between stator and rotor.

Construction of Single Phase Induction Motor

A single phase induction motor is similar to the three phase induction motor except its stator is fed with single phase supply. The rotor construction is identical to that of a three phase squirrel cage, type induction motor. In other words, only three phase rotor can be interchanged with that of a single phase rotor.

The stator and rotor of single phase induction motor are not electrically connected but are magnetically coupled and there is uniform air-gap between the stator and rotor. The stator slots are distributed uniformly, so a single-phase double-layer winding is employed. A simple single phase winding would produce no rotating magnetic field and no starting torque. It is therefore necessary to split the stator winding into two parts, each displaced in space on the stator to make the motor self-starting.

Working Principle of Single Phase Induction Motor

A single phase induction motor consists of a stator on which a single phase winding is provided and a rotor having cage winding. When single phase supply is given to the stator winding, a pulsating magnetic field is produced. The pulsating magnetic field means the field which is build up in one direction, falls to zero, and then again build up in opposite direction. The axis of this field is stationary in the horizontal direction as shown in Fig. 2. The pulsating field will induce an emf in the rotor conductor by transformer action. Since the rotor has a closed circuit, current will flow through the rotor conductors.

The direction of induced emf and current in the rotor conductor is shown in figure.

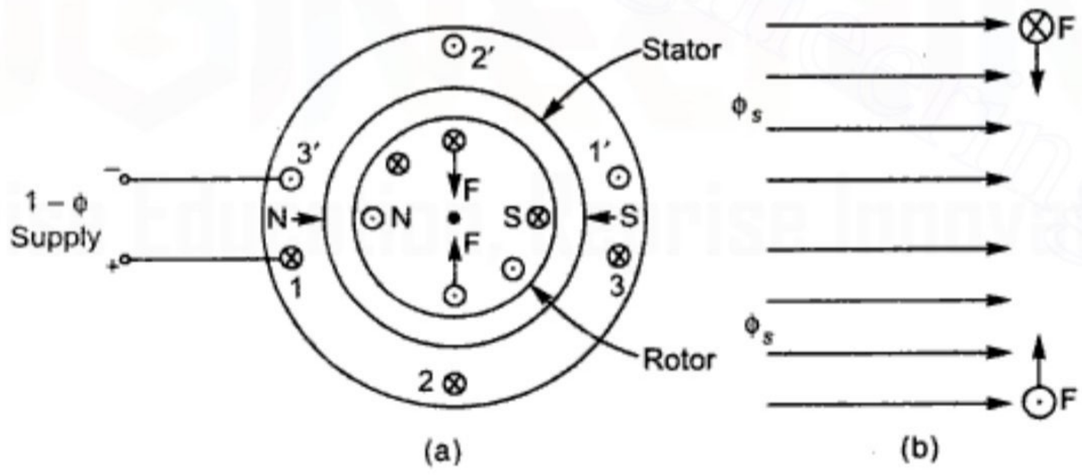

Fig. 2

(*a*) When rotor is stationary the rotor field produced by transformer emf aligned with stator field ; (*b*) Direction of force.

The two sets of forces shown in figure will cancel each other and the rotor will experiences no torque. The torque is zero as the stator and rotor magnetic fields are aligned. Therefore, when a single-phase supply is given to the stator winding, the rotor does not rotate. A starting torque is therefore provided to the rotor which enables the rotor to pick up speed in any direction.

Material com direitos autorais
Downloaded From : www.EasyEngineering.net

Downloaded From : www.EasyEngineering.net

The rotor of single phase induction motor develops torque when it is given an initial rotation can be explained with the help of two theories namely

(*i*) Cross-field theory

(*ii*) Double revolving field theory.

Both the theories are fairly complicated and neither has any advantage over the other in numerical calculations. Almost similar results are achieved with both the theories. Both the theories explains how a torque is produced while rotor rotate. Here in this book we shall discuss the double revolving field theory.

Double Revolving Field Theory of Single Phase Induction Motor

This theory is based on the fact that the pulsating magnetic field produced by the stator winding can be expressed as the sum of two oppositely rotating fields of same magnitude and strength. The magnitude of each of these fields will be equal to one-half of the maximum field strength of the stator pulsating field.

If two sinusoidally distributed mmfs having constant magnitude $\frac{F_{max}}{2}$ are rotating in opposite directions, their combined effect is equivalent to one pulsating field F_{max} cos *wt* varying between + F_{max} and – F_{max} as shown in Fig. 3.

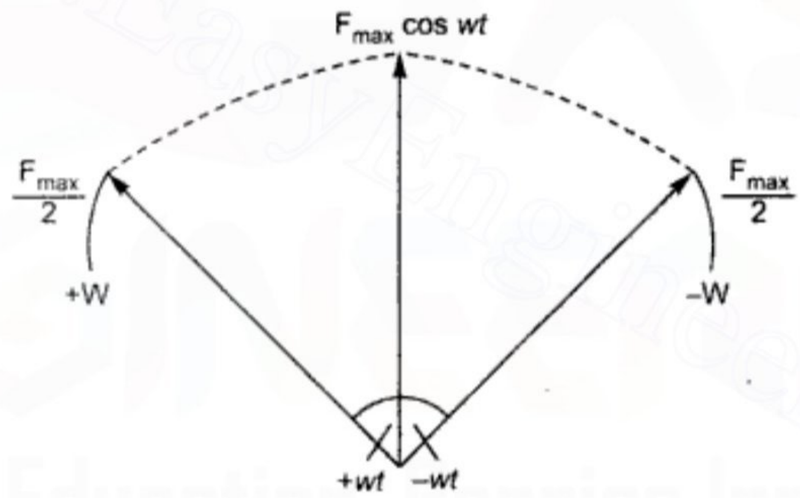

Fig. 3

Therefore, a pulsating fields can be resolved into two rotating fields of half amplitude rotating in opposite direction at synchrous speed.

The stator mmf F_s can be written as

$$F_s = F_i \cos \theta \qquad \text{... (i)}$$

Where,

θ → electrical space angle from stator coil axis

F_i → instantaneous value of mmf at the coil axis.

The instantaneous value of mmf at the coil axis is directly proportional to the instantaneous stator current. Therefore,

$$F_i = F_{max} \cos wt \qquad \text{... (ii)}$$

Putting the value of equation (*ii*) in equation (*i*) we get

Bahan dengan hak cipta
Downloaded From : www.EasyEngineering.net

Downloaded From : www.EasyEngineering.net

By this two phase arrangement, a revolving field a created and motor develops the starting torque.

(*b*) **Capacitor Start Motor :** It has also two windings on the stator that is main winding and auxiliary winding which are space displaced by 90°. The time displacement between the main winding and auxiliary winding current is obtained by insorting an additional capacitor in series with the auxiliary winding. By the use of capacitor of appropriate value the power factor of the motor is improved and also the main winding current I_a in auxiliary winding at standstill is made to lead I_m current of main winding by about 90°. Thus due to the use of capacitor the current I_a and I_m displaced by 90° resulting much larger starting torque than in resistance start split phase motor. The figure for capacitor start motor is drawn below:

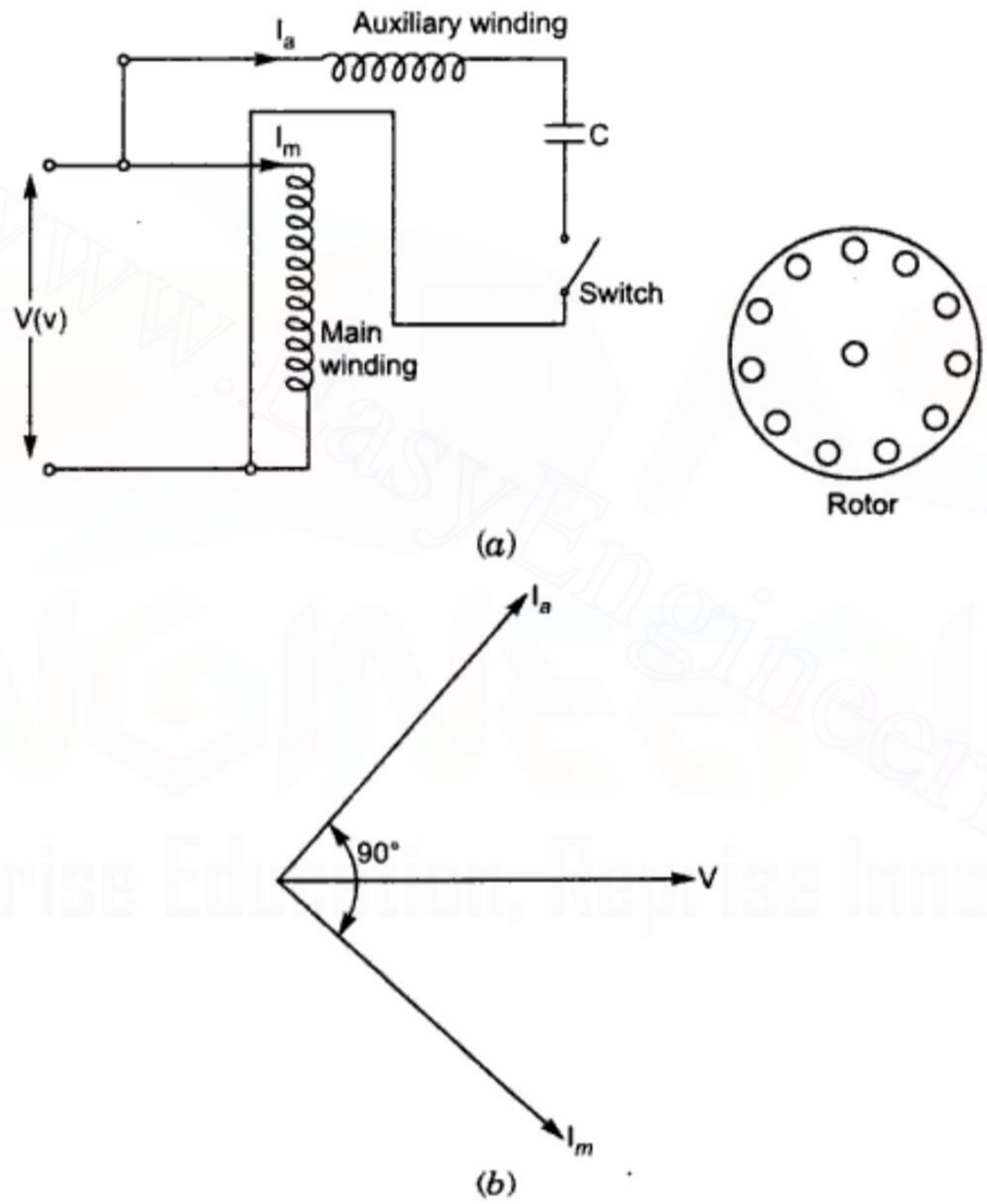

Fig. 5. *Capacitor start 1 – ϕI_M*

The capacitor and the auxiliary windings are made for the short time duration and the switch used in circuit disconnects them when the motor achieves about 75% speed.

(*c*) **Capacitor-Start Capacitor-Run Motor:** In this type of motor the auxiliary winding contain two capacitors which are parallel to each other with a centrigal switch as shown in Fig. 6.

Bahan dengan hak cipta
Downloaded From : www.EasyEngineering.net

Downloaded From : www.EasyEngineering.net

UNIT VI

14

Direct Current Machine (Generators)

Introduction

DC machine is generally an alternating current machine in which the current vary sinusoidally and is furnished with a special device named 'Commutator'. The commutation is the process by which the ac is converted into dc and vise-versa. The commutation process also helps in keeping the armature mmf field stationary in space.

The dc generator is the device, which converts the mechanical energy into electrical energy. It is based on the principal that when the conductor is rotated in a magnetic field, an induced voltage would generate in the conductor. d.c. generators are used only for special applications and local dc power generation. It is due to the reason that commutation is required to rectify the internal generated ac voltage and thus making of higher rating d.c. power generators is not feasible.

Construction of DC Machine

A d.c. generator mainly consists of four main parts they are,

(1) Field windings or field system (2) Armature windings or armature of d.c. machine (3) Commutator (4) Brushes.

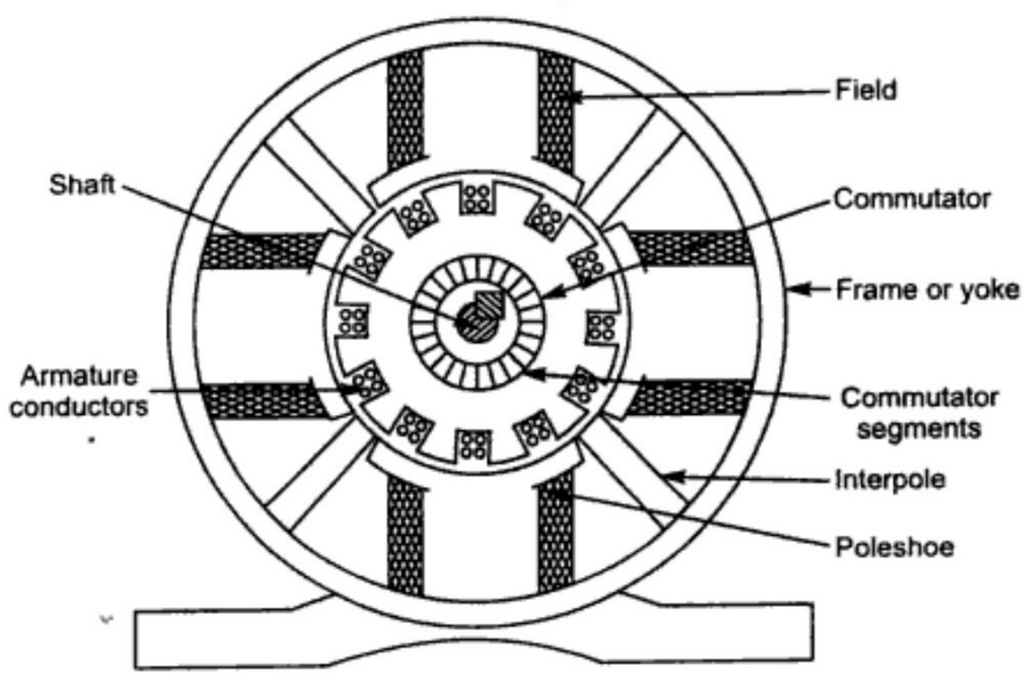

Fig. 1. *Main parts of a four-pole d.c. machine*

Materiál chránený autorským právom
Downloaded From : www.EasyEngineering.net

Downloaded From : www.EasyEngineering.net

Field system

The magnetic field system is stationary part of the d.c. machine. The main purpose of the field system is to produce a uniform magnetic field in the air gap, within which the armature rotates. Electromagnets are preferred in comparison with permanent magnet due to its greater magnetic effect.

The outer frame or yoke is a hollow cylinder of cast steel. Even numbers of poles are bolted to the yoke. The yoke is one of the essential parts of dc machine. It is necessary due to the following reason:

(*a*) It provides a path for the magnetic circuit

(*b*) It supports the pole core and acts protective shielding to the machine.

As the poles project inwards they are called as salient poles. Each pole core has a pole shoe having a curved surface. The pole shoe performs the following two requirements (*a*) It supports the field coils, (*b*) It reduces the reluctance by increasing the cross sectional area of the magnetic circuit.

Armature

The armature is the rotating part of the dc machine. The armature of the dc machine consists of a shaft upon which a laminated cylindrical core is mounted called armature core. The armature core has slots in its outer surface. The laminations are insulated from each other and tightly clamped together. The purposes of using these laminations is to minimize the eddy circuit loss. The armature is the one of the very important requirement of dc machine without which the whole operation results in failure. The connected arrangement of slots and conductor is called as armature winding. Basically two types of windings are used in dc machine, they are lap and wave winding.

Lap Winding

In lap winding, the finish end of one coil is connected to a commutator segment and to the start end of the adjacent. The armature coil is connected to the commutator by the lap winding form. The ends of each armature coil segments connected to the commutator so as to bring the equalization between total number of parallel path and the total number of poles of the machine. Coil under the same pole and similarly all remaining coils are connected.

Let A = no. of parallel paths

P = no. of poles of machine

So, according to the above statement in lap winding

$$A = P$$

It can be remembered easily by the spelling of lap winding. In LAP both A and P is present so, it can be remembered here as A = P.

Wave Winding

In wave winding pattern the ends of the armature coils are connected to the segment at same distance apart so as to obtain only two parallel paths. These two parallel paths are obtained between the positive and negative brushes.

Materiál chránený autorským právom
Downloaded From : www.EasyEngineering.net

Downloaded From : www.EasyEngineering.net

For wave winding $A = 2$

where A = no. of parallel paths

Commutator

The commutator is one of very important part of dc machine which rotates with the armature. The main function of commutator is to convert dc to ac and vice-versa, the commutator also helps to keep the magnetic flux stationary in space. Generally alternating voltage is produced in the coil, which is rotating in a magnetic field, but direct current is required in the external circuit. For this purpose commutator is needed. Each commutator segment is connected to the ends of the armature coils. The commutator receives the current from the brushes, which are also placed on the rotating armature.

Brushes

Generally the carbon brushes are used in the dc machine. The brushes are generally needed to collect from the armature winding. Two or more carbon brushes are placed in the commutator for uniform distribution of current. It distributes the current in both the cycle. Each brush is supported in a metal box called brush box. The current so produced in the armature winding passes through the commutator and then to the external circuit by these brushes.

Basic Magnetic Circuit of DC Generator

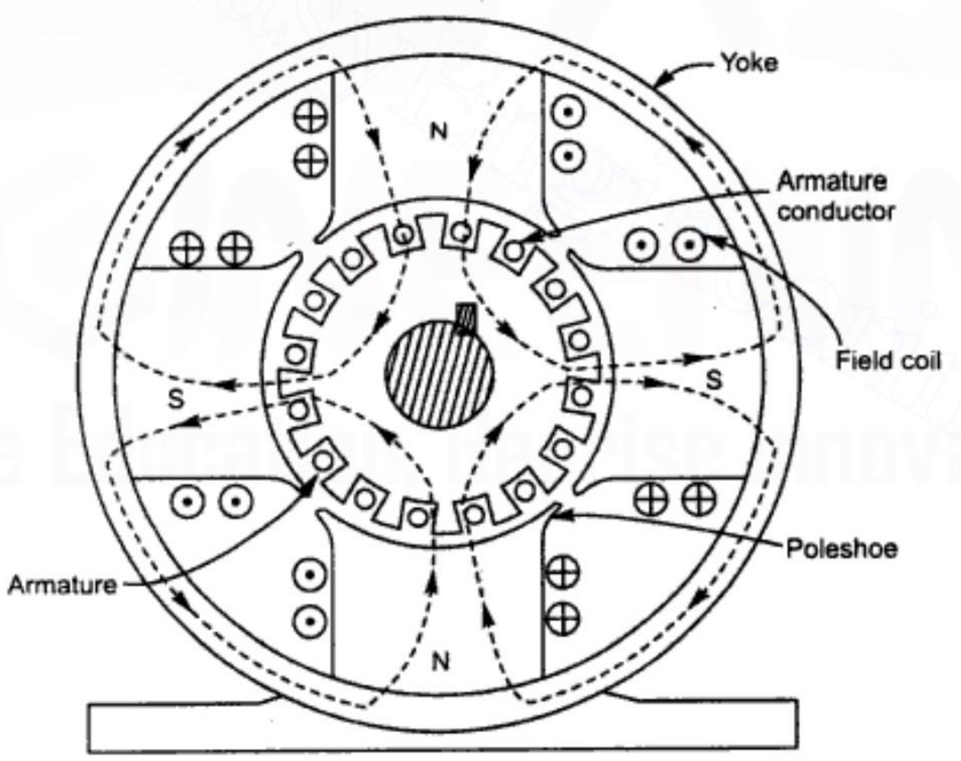

Fig. 2. *Magnetic circuit of D.C. generator.*

The magnetic circuit of a 4-pole dc generator is shown in Fig. 2. The dotted lines shows the main flux path. The air gap is the space between the armature and the pole face. The flux so produced by the field winding of a generator links the pole cores, air gap, armature core and the yoke.

Generator Action: DC generators are used only for special applications and the local dc power generation. It is due to the reason that Commutator is required to rectify the internal

Materiál chránený autorským právom
Downloaded From : www.EasyEngineering.net

Downloaded From : www.EasyEngineering.net

ac voltage and thus making of higher rating dc power generators is not feasible. Also dc motors are versatile machine, since these provide high starting and decelerating torques.

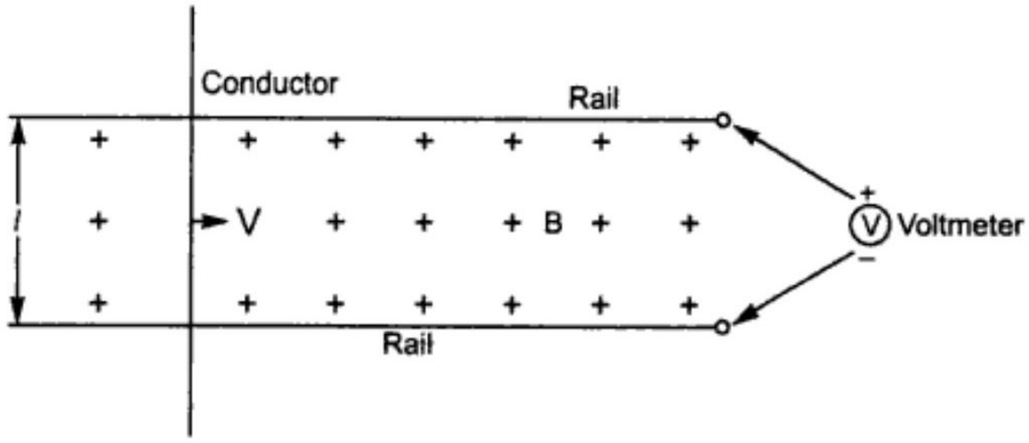

Fig. 3. *Generator action.*

Consider a conductor of length 'l' perpendicular to a uniform magnetic field of flux density 'B' moves with a relative velocity 'v' with respect to the field .

Then,

B = magnetic flux density in Tesla (T)
l = length of conductor in meter (m)
v = velocity of conductor in the field in m/s

When the conductor motion is not perpendicular to the field, the equation is given by,

$$e = Blv \sin \theta \text{ volts.}$$

Excitation of DC Machine

In dc machine the field coils or field winding is excited by the current in order to produce the magnetic flux. The production of the useful magnetic flux with the application of electric current to the field windings is generally known as excitation. Generally two types of excitation are possible in a dc machine, they are

(*i*) Separately-excited dc machine.
(*ii*) Self-excited dc machine.

Separately-Excited DC Machine

In this method of excitation the field winding is energized or excited by a separate dc source. With the application of separate dc source the field coils are energized and produces the magnetic flux. This type of excitation is known as separate excitation.

Self-Excited Machine

In this method of excitation the field coils or field winding is excited or energized by the machine itself. So, the excitation of field winding by machine itself is to produce magnetic flux is known as self-excitation.

The dc machines are distinguished according to the connection of field and armature winding. The main types of dc machines are categorized below:

Materiál chránený autorským právom
Downloaded From : www.EasyEngineering.net

Downloaded From : www.EasyEngineering.net

(*i*) Separately excited generator
(*ii*) Series generator
(*iii*) Shunt generator
(*iv*) Compound generator.

(*i*) *Separately excited d.c. Generators:*

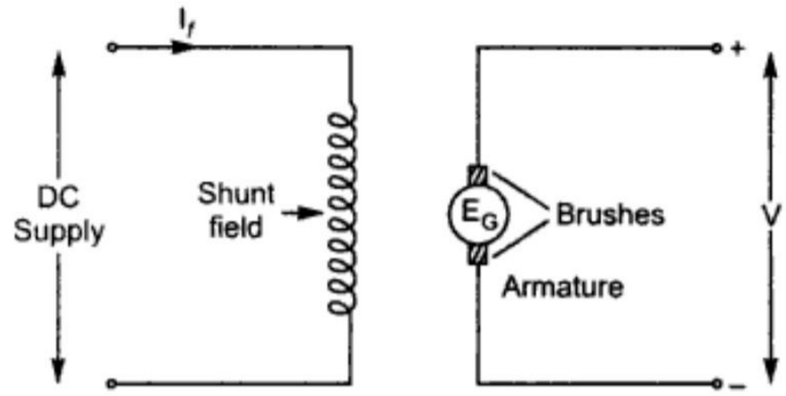

Fig. 4. *Separately excited D.C generator.*

As we have discussed earlier that in separate excitation the field winding is energized by a separate d.c. source is produced magnetic flux. The connection diagram for separately excited dc generators is drawn in Fig. 4.

In the diagram,

I_f = field current

V_t = terminal voltage (armature)

(*ii*) *Series Generator:* In series generator, the principal of operation is base on self-excitation method. The circuit or connection Fig. 5, for the series generators is given below:

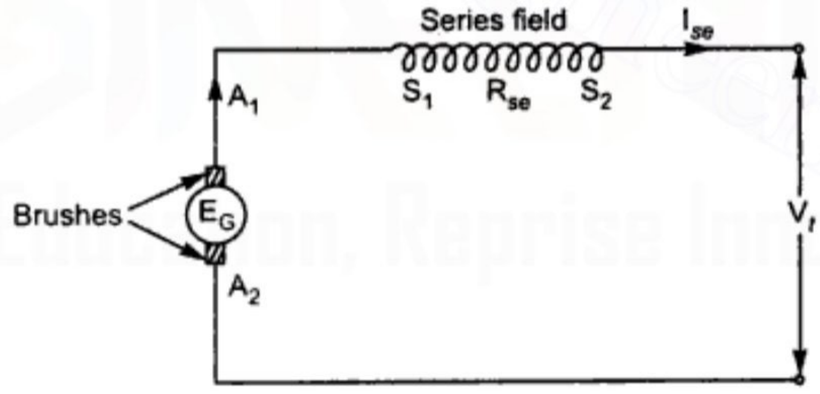

Fig. 5. *Series generators.*

where, I_a = armature current

I_{Se} = series field current

R_{Se} = series field winding

V_t = terminal voltage

In series generators, the field winding or field coils are in series with the armature windings. The operations of series a generator is based on the armature current, which flows through the series field winding and then magnetic flux is generated. Since the armature current is large, the series field winding consists of few turn of wire of large cross sectional area.

Materiál chránený autorským právom
Downloaded From : www.EasyEngineering.net

Downloaded From : www.EasyEngineering.net

(*iii*) *Shunt Generators:* The shunt generator is also self-excited dc machine. In this type of machine, the field winding or coils are in parallel to the armature winding. The connection diagram for the shunt generators is drawn below.

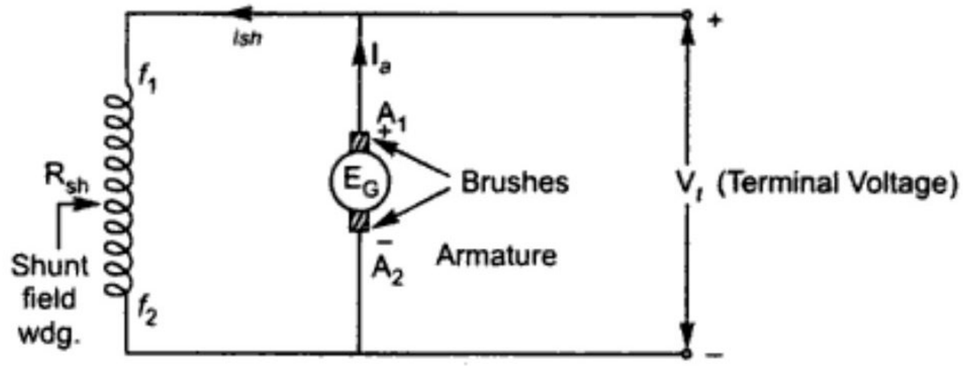

Fig. 6. *D.C. shunt generators.*

The shunt field is made of large number of turns of fine wire as it receive the full output voltage and small field winding current.

where R_{sh} = resistance of shunt field winding
I_{sh} = shunt field current
V_t = terminal voltage
I_a = Armature current

(*iv*) *Compound Generator*: This is also self-excited dc machine in which, the machine itself excites the field winding. In compound generation both the series and parallel field windings are connected across the armature. The machine having series and field winding both are known as compound generation. The two types of connection are possible in compound generator. They are

(*a*) Short shunt compound generation
(*b*) Long shunt compound

The connection diagrams for both the types of connection are drawn below:

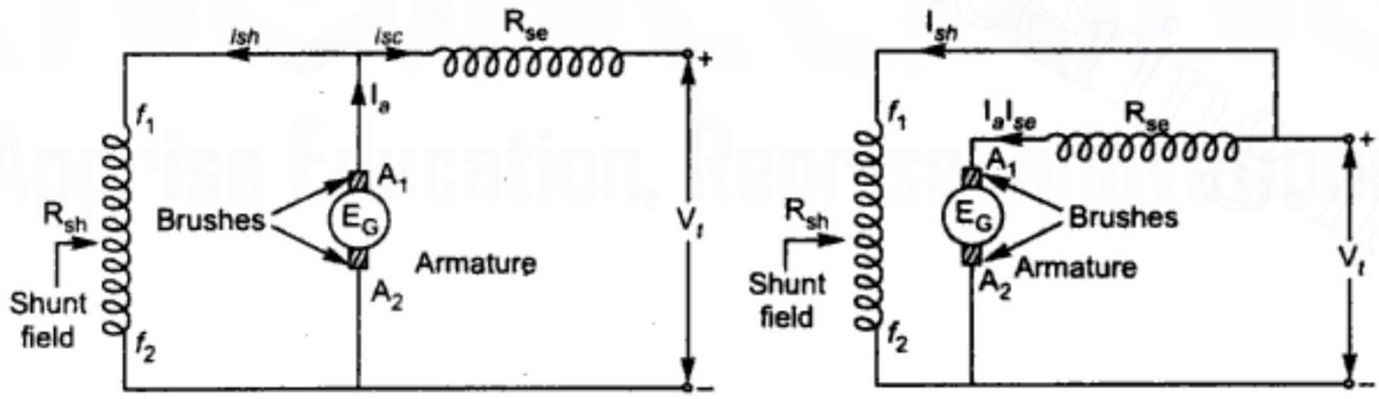

Fig. 7. *Short shunt and long shunt compound generator.*

In figure the connection diagram of short shunt compound generator is shown. In short-shunt, the shunt field is connected in parallel with the armature. Where as in the long-shunt compound generator both series and shunt fields are parallel with the armature.

I_a = armature current
I_{sh} = shunt field current
I_{se} = series field current
R_{sh} = shunt field winding
R_{se} = series field winding
V_t = terminal voltage.

Copyrighted material
Downloaded From : www.EasyEngineering.net

Downloaded From : www.EasyEngineering.net

Relationship between the Generated Voltage and Excitation Current of d.c. Generators

(*i*) *At no load*: At no load condition the generated emf is given by

$$E_G \propto \varnothing.N$$

or

$$E_G = K\varnothing N$$

where,

K = Constant of proportionality

$\varnothing$ = magnetic flux

N = Speed of rotation in RPM

E_G depends directly in the flux which is produced by the ampere-turns of the field coils when the speed is constant. Since the number of turns is constant, the flux depends on only the field current.

When $I_f = 0$ is with the field circuit open circuited a small voltage E_S is appeared due to effect of residual magnetism. When the field current increases the generated emf also increases linearly up to the knee of the magnetization curves. After this knee point is achieved, increases in I_f causes saturation of magnetic field .

From the above discussion we can conclude that a larger increase in field current is required to obtain desired increase in voltage above the knee point or in saturation region. The magnetization curve for separately excited dc machine is drawn in Fig. 8.

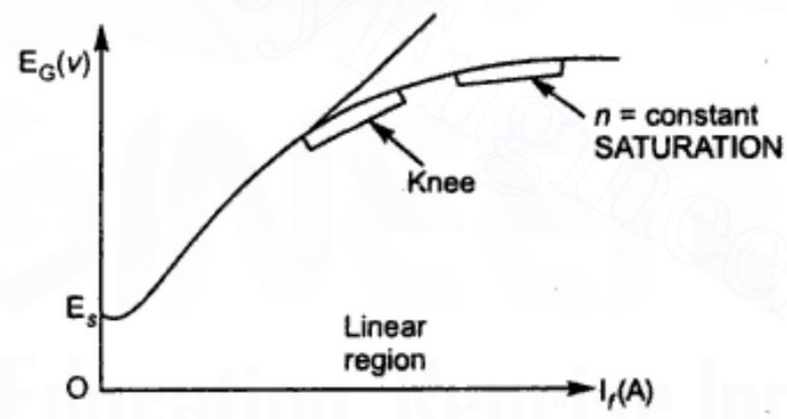

Fig. 8. *Magnetization (no load) characteristics of a separately excited d.c. machine.*

In above curves, the curves is not obtained from the origin but shifted a little above on the ordinate, due to the residual magnetism.

Application of Load

(*a*) *Separately excited d.c. generator:* Generally the terminal voltage decreases when the armature winding resistance increases and the expression is given as

$$V_t = E_G - I_a.R_a$$

where, V_t = terminal voltage

I_a = Armature current (load current)

Copyrighted material
Downloaded From : www.EasyEngineering.net

Downloaded From : www.EasyEngineering.net

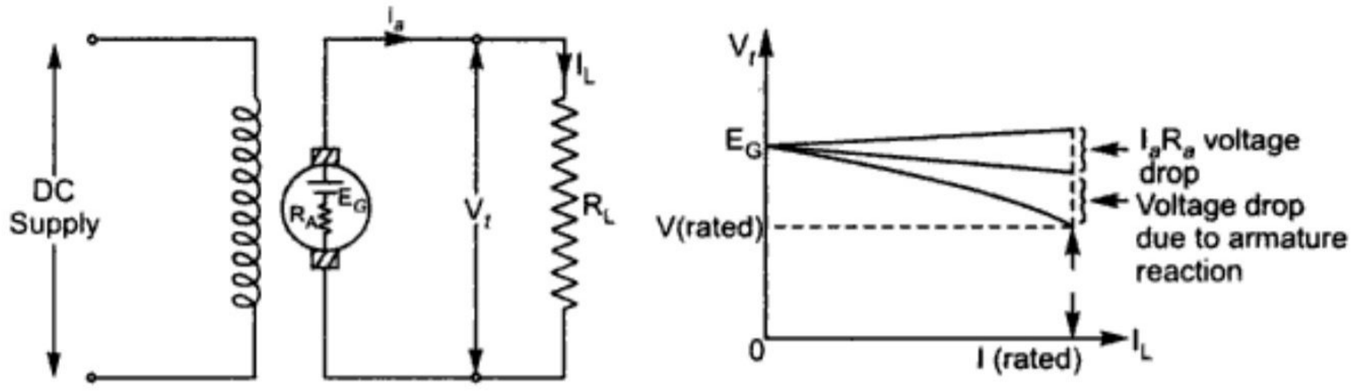

Fig. 9. *Load characteristics of a separately excited d.c. generator.*

Another factor for decrease in terminal voltage is the armature reaction. This armature reaction is discussed later on. Due to this the field flux decreases and distorted, which ultimately results in decreases of terminal voltage.

(*b*) *Series generator (with load) :* The circuit diagram for series generator is as shown below:

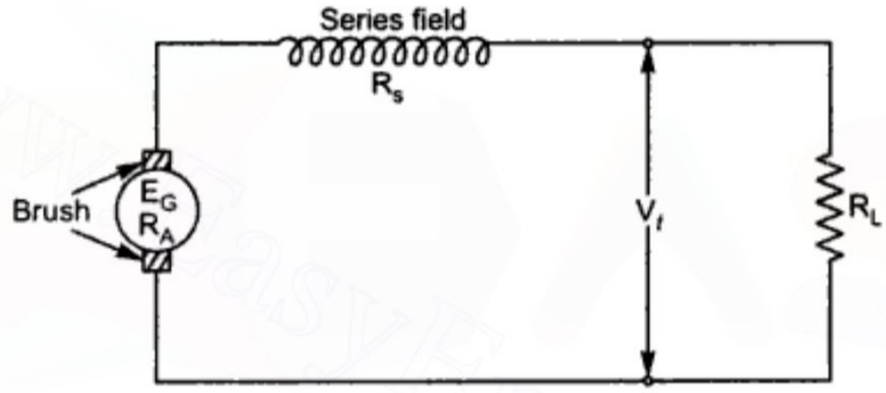

Fig. 10. *Circuit diagram for series generator with Load.*

In series generator when the load is connected then there is a voltage drop in field and armature winding. The voltage drop in series generator with the application of load is given by expression:

$$V_t = E_G - I_a(R_A + R_S)$$

where, V_t = terminal voltage
I_a = armature current
R_A = armature resistance
R_S = series field resistance

The load characteristics of d.c. series generator can be drown as below

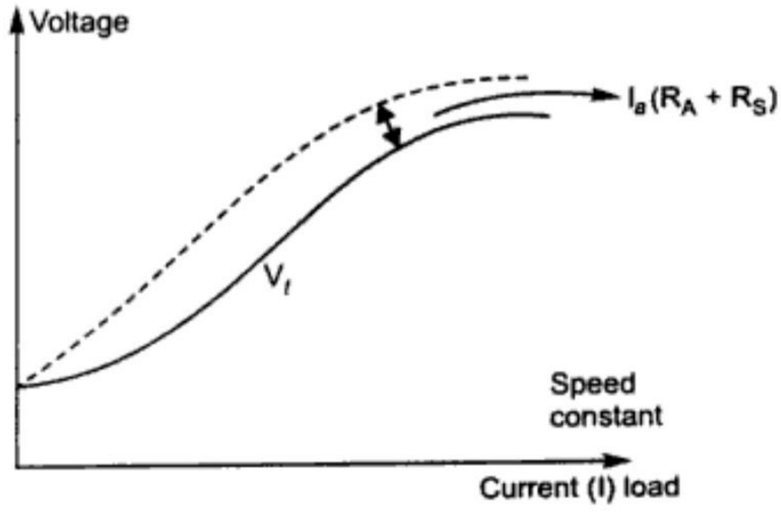

Fig. 11. *Load characteristics of d.c. series generator.*

Material com direitos autorais
Downloaded From : www.EasyEngineering.net

Downloaded From : www.EasyEngineering.net

In d.c. compound generator the shunt and series field is connected in parallel with the armature. When the load is connected across the armature, the voltage drop appears in series, shunt and armature winding ($I_A R_A$). This voltage drop appears due to weakend flux and distortion of flux path from the original.

The load characteristic of dc compound generation is shown below:

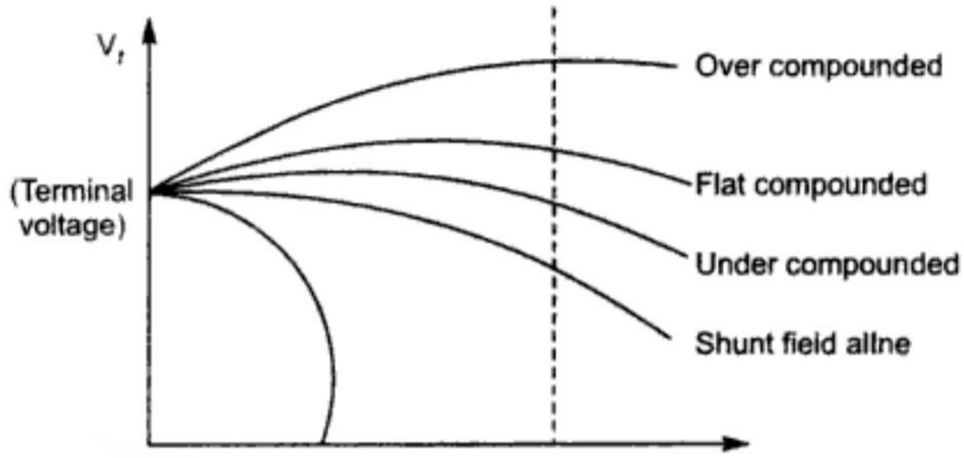

Fig. 15. *Load characteristics of d.c compound generator.*

e.m.f. Equation of d.c. Machine

The elementary form of a.c. and d.c. generation is shown below:

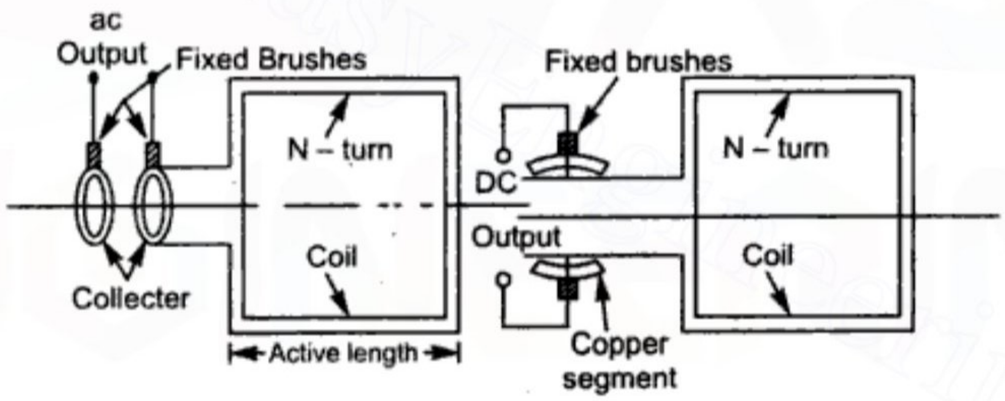

Fig. 16. *Elementary form of (a) a.c. generator (b) d.c. generator.*

When the field coils are energized then magnetic flux ∅ generated due to which the armature rotates. When the armature rotates then a voltage is induced in its coils. In a generator, e.m.f. is greater than the terminal voltage but in a motor, the generated e.m.f. is less than of the terminal voltage.

During generator action,the e.m.f. which is produced on the rotating armature is called the generated e.m.f. and $E_r = E_g$.

In case of motion the e.m.f. of rotation is called back e.m.f. and in this case $E_r = E_b$ .The final result for both generator and motor is same.

Let ∅ = flux in Weber (wb)

A = number of parallel paths

Z = total number of conductors

P = total number of paths

n = speed of rotation in revolution per second (rps)

Therefore, $\frac{Z}{A}$ = number of armature conductors.

Material com direitos autorais
Downloaded From : www.EasyEngineering.net

Downloaded From : www.EasyEngineering.net

So, generated voltage per conductor

$$= \frac{\text{Flux cut per revolution in Wb}}{\text{Time taken in one revolution in second}}$$

Since, n revolutions takes place in one second, so one revolution will be made in $\frac{1}{n}$ second.

Thus, average voltage generated per conductor

$$= \frac{P\varnothing}{\frac{1}{n}} = P\varnothing n \text{ volts.}$$

Therefore total voltage generated is given by

$$E = \text{(average voltage per conductors). (number of conductors per path)}$$

$$E = P\varnothing n.\frac{Z}{A}$$

or,

$$E = nP\varnothing\frac{Z}{A}$$

The above expression is called the e.m.f. equation of d.c machine.

Armature Reaction

When the armature of a dc machine carries current, the distributed armature windings produce its own mmf called armature reaction. In other words, the effect of armature mmf on the main field flux distribution in the air gap is also known as armature reaction.

The armature mmf produces two undesirable effects on the main field flux and they are

(*i*) Reduction in the main field flux

(*ii*) Distortion of the main field flux wave.

(*iii*) According to the above obtain expression of generated e.m.f.

$$E \propto \varnothing$$

When the $\varnothing$ decreases, the generated voltage and torque also decreases.

The figure illustrating the space distribution is shown below:

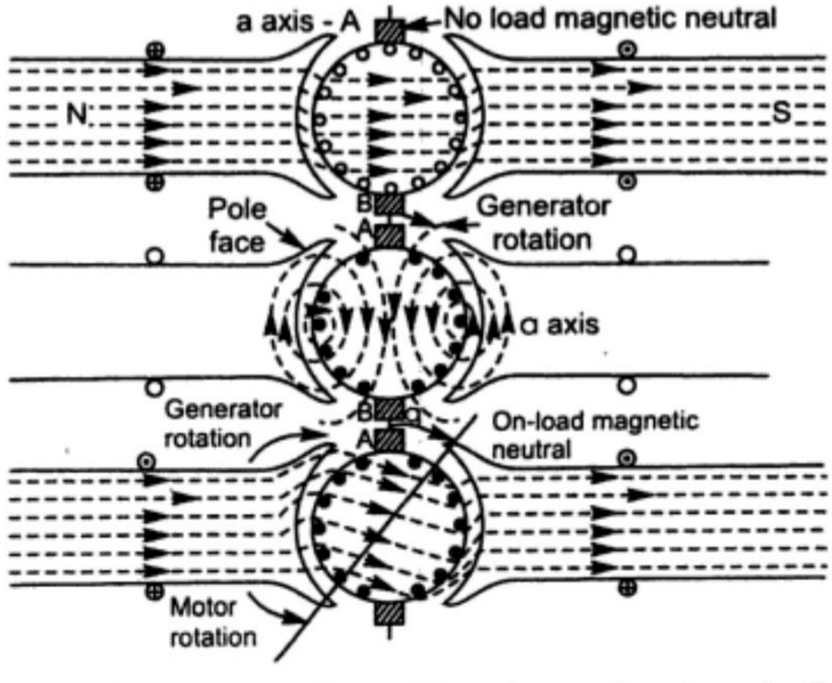

Fig. 17. *(a) Main pole flux (b) Armature flux (c) Resultant of main pole flux and armature flux.*

Material com direitos autorais
Downloaded From : www.EasyEngineering.net

Downloaded From : www.EasyEngineering.net

Commutation Process

When the armature coils reaches the brush, it carries current $\left(=\frac{I_a}{a}\right)$ in one direction but soon after the armature coil traversed the brush width, the current in the coil gets reversed to $-\frac{I_a}{a}$. This reversal of current in the armature coil is known as commutation process.

The two main function of commutation is

(*i*) It converts the unidirectional or direct current into the alternating current in the armature coil and vice-versa.

(*ii*) It also helps in keeping the armature mmf stationary in space.

Generally the current generated in armature of dc generator is of alternating nature. When armature conductors are under North Pole, these current flows in the direction and when it faces the South Pole, the flow of current takes place in opposite direction.

When the armature coil passes the brush width the current in the armature coil is reversed. When a brush spans two Commutator segments, the winding element connected to those segments is short circuited. This period of short circuit of armature coil by a brush creates the reversal of current and also it brings its maximum value in reverse direction.

The time during short-circuit condition is known as the period of commutation. It is denoted by T_C.

In the commutated coil, the current changes from $\frac{I_a}{a}$ (*i.e.*, I_c) to $-\frac{I_a}{a}$ (*i.e.* $-I_C$) in commutated period T_C. During the changes of the current in time interval T_C, an e.m.f. e_C is induced in the coil due to it self inductance L_C and its magnitude is given by

$$e_C = L_C \cdot \frac{di}{dt}$$

Also, e.m.f. is induced in the commutator coil due to mutual flux of neighboring coils. Therefore the sum of two e.m.f's first due to self-induction of the coil and second due to mutual flux of neighboring coil is known as 'Reactance voltage'. This reactance voltage is the principal cause of sparking in commutator and also it results serious effect on commutator and the carbon brush. The diagram for the commutation process pertaining the effects of reactance voltage is shown below.

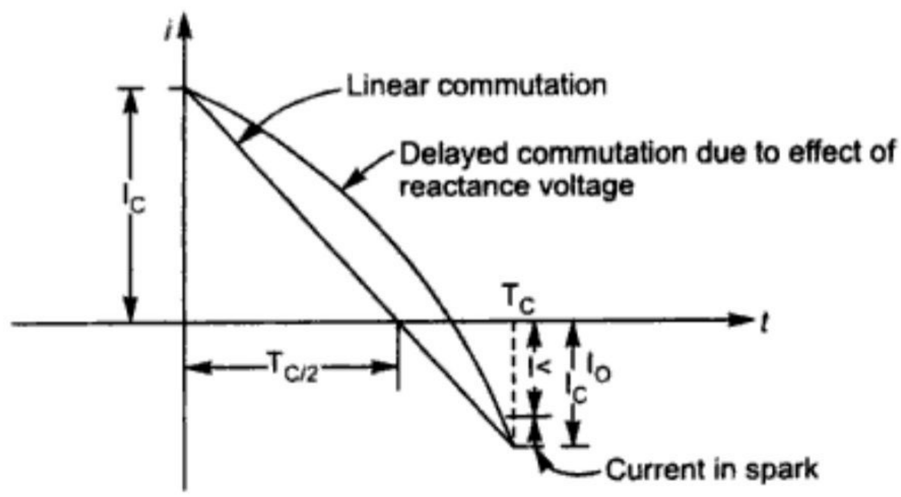

Fig. 18. *Delayed commutation (due to reactance voltage).*

Material com direitos autorais
Downloaded From : www.EasyEngineering.net

Downloaded From : www.EasyEngineering.net

Method for Decreasing the Effect of Commutation

The effect of reactance voltage 'e_C'due to which sparking occur can be reduced though not be completely eliminated by the following methods.

(*i*) **By Using Brushes:** The type of brush material affects the commutation process considerably. The various type of brushes are carbon, electro-graphite, copper-graphite etc. Carbon brushes are used for small d.c. machines, while in general electro- graphite is used frequently. Due to the use of the brushes the reactance voltage responsible for sparking is reduced.

(*ii*) **By Using Interpoles:** The Interpoles are the auxiliary poles, which are placed between the main poles. The Interpoles are fitted to the yoke and are known as commutating pole or compoles. The use of the Interpoles also helps in reducing the reactance voltage, which results in reduction of sparking at the commutator. The figure of interpole for d.c. machine is shown below.

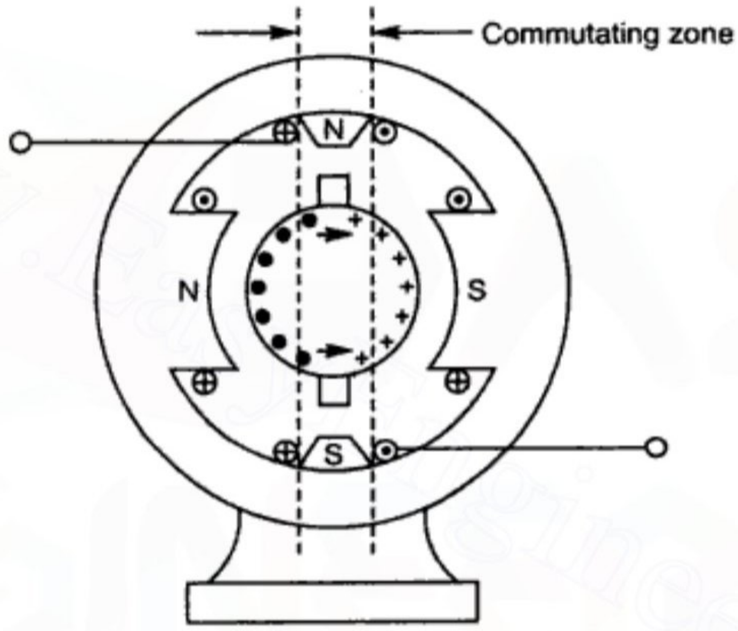

Fig. 19. *Inter poles for d.c. machine.*

SOLVED NUMERICAL PROBLEMS

Example 1: *A 10 pole dc generator has an armature with the following specifications slots : 120 with six conductor per slot, each capable of taking 100 amp winding lap. If the speed is 900 rmp find the flux per pole to produce a voltage of 250 volts on no-load. If the terminal voltage on full load is 240 volts what is the rated output of the machine ?*

Solution : Number of poles = 10

Slots	= 120
Conductors/slot	= 6
Capacity of conductor	= 100 A
Speed	= 900 rpm
Voltage	= 250 V

∴ Total number of conductors, Z = 6 × 120 = 720

We know e.m.f, $$E_g = \frac{\phi ZN}{60} \times \frac{P}{A}$$

Material com direitos autorais
Downloaded From : www.EasyEngineering.net

Downloaded From : www.EasyEngineering.net

Example 4: *A 10 pole lay wound be dc generator has 700 armature conductors. The total armature current is 1600 A. Find the number of compensating winding conductors in each pole face to give full armature reaction compensation if each pole covers 70% of the pole pitch.*

Solution : Number of total armature conductors/pole $= \frac{700}{10} = 70$

Number of active armature conductor/pole $= 0.7 \times 70 = 49$

Number of parallel $= 10$

Number of compensating winding conductors $= \frac{49}{10} = 4.9$

≈ 5 Cadin/pole. **Ans.**

Example 5: *Two generators (shunt) are together supplying 100 a to a load. Generator 1 gives 400 V on no load and 300 V when supplying 100 A. Generator second gives 400 V on no load 320 V when supplying 100 A. Find the current supplied by each and the voltage across load.*

Solution : Let I_1 be the current supplied by first generator. Then the current supplied by second generator is $100 - I_1$. The terminal voltage V is given by

$$V = 400 - \frac{I_1}{100}(400 - 300)$$

Also
$$V = 400 - \frac{100 - I_1}{100}(400 - 300)$$

Solve above two eqns.

$$100V - 40000 + I_1(100)$$

$$100\,V + 100\,I_1 - 40000 = 0 \qquad ...(i)$$

and second

$$100\,V - 40000 + (100 - I_1)(80) = 0$$

$$100\,V - 40000 + 80000 - 80\,I_1 = 0$$

$$100\,V - 80\,I_1 - 32000 = 0 \qquad ...(ii)$$

Subtract eqns. (*i*) and (*ii*)

$$100\,I_1 + 80\,I_1 - 40000 + 32000 = 0$$

$$180\,I_1 = 8000$$

$$I_1 = \frac{8000}{180} = 44.44$$

$$V = 355.56$$

Current supplied by second generator $= 100 - I_1 = 65.66$ **Ans.**

Example 6: *A series generator having a total resistance (i.e., armature and series field winding) of 0.5 ohm is running at 1000 rpm and is delivering 5 kW at a voltage of 100 V if the speed is rauised to 2000 rpm and load adjusted to 10 kW find the new armature current and terminal voltage.*

Solution: Since the armature and field currents are the same let this current be denoted by I.

Material com direitos autorais
Downloaded From : www.EasyEngineering.net

Downloaded From : www.EasyEngineering.net

14. Explain the resistance commutation in brief.

15. Draw the circuit model of d.c. generator and obtain the expressing for induced e.m.f. in some.

16. What is the basic difference between lap and wave winding?

17. What are the various methods which improves the commutation process?

18. A shunt generator producess 450 A at 230 V. The resistance of the shunt field and armature are 50 W and 0.025 ohm respectively. Find out the armature voltage drop.

19. A 2-pole generator with wave wound armature has 51 slots each having 24 conductors. The flux per pole is 0.01 Wb. find speed at which the generator should run.

20. In a 10-pole, lap wound d.c. generator, the number of active armature conductors per pole is 50. Obtain the number of compensating conductor per pole required.

21. A 100 kW, 250 rpm, d.c. generator has 6 poles. The armature has 83 slots each holding 8 conductors, and the winding is wave wound. Find out the no-load flux per pole at which and e.m.f. of 500 volts is induced.

22. A 4-pole, 1200 rpm generator with a lap wound armature has 65 slots and 12 conductors per slot. The flux per pole is 0.02 Wb. Calculate the e.m.f. induced in the armature.

23. A 4-Pole, 1200 rpm, lap wound dc generator has 760 conductors. If the flux per pole is 0.02 wb. Calculate the e.m.f generated.

24. In a d.c. machine if p is the number of poles, N is the armature speed is rpm then obtain the frequency of magnetic reversals.

25. In a dc generator running at 1600 rpm gives 240 V d.c. If the speed is propped to 1400 rpm without change in flux. Calculate the new e.m.f.

26. If the no-load voltage of a certain generator is 220 V and the rated load voltage is 200 V. Calculate the voltage regulation.

27. A shunt generator running at 600 rpm has an induced e.m.f. of 200 Volts. If the speed increases to 750 rpm. Calculate the induced e.m.f.

28. A 4 pole d.c. generator has 490 armature conductors and an armature current of 140 A. The brushes have been given a load of 10° actual. Find out the demagnetising AT/Pole if the machine (a) lap wound (b) wave wound.

Material com direitos autorais
Downloaded From : www.EasyEngineering.net

Downloaded From : www.EasyEngineering.net

15

D.C. Machine (Motor)

Introduction

A motor is a type of machine in which the electrical energy is converted into mechanical energy. In both the cases that is Generator and motor and induced e.m.f. is generated in armature coil. The e.m.f. generated in case of generator is greater than that of terminal voltage V_t while e.m.f generated in motor (back e.m.f.) is less than that of terminal voltage. From the constructional point of view, both generator and motor is very much similar.

Counter e.m.f. or Back e.m.f. in d.c. Motors

When a voltage is applied to the dc motors the current will start to flow into the positive brush, through the commutator into the armature winding. Like generators, the motor has also armature winding. The armature windings of generators and motor are identical to each other. Therefore conductors under the North Pole field carries current in one direction while all conductors under the South Pole field carries current in opposite direction.

When the armature carries a current it will produce a magnetic field of its own, which will interact with the main field. As a consequence a force developed on all the conductors, which tends to turn the armature. The figure for the armature current direction for clockwise rotation and resulting direction of counter e.m.f. in a d.c. motor is shown below:

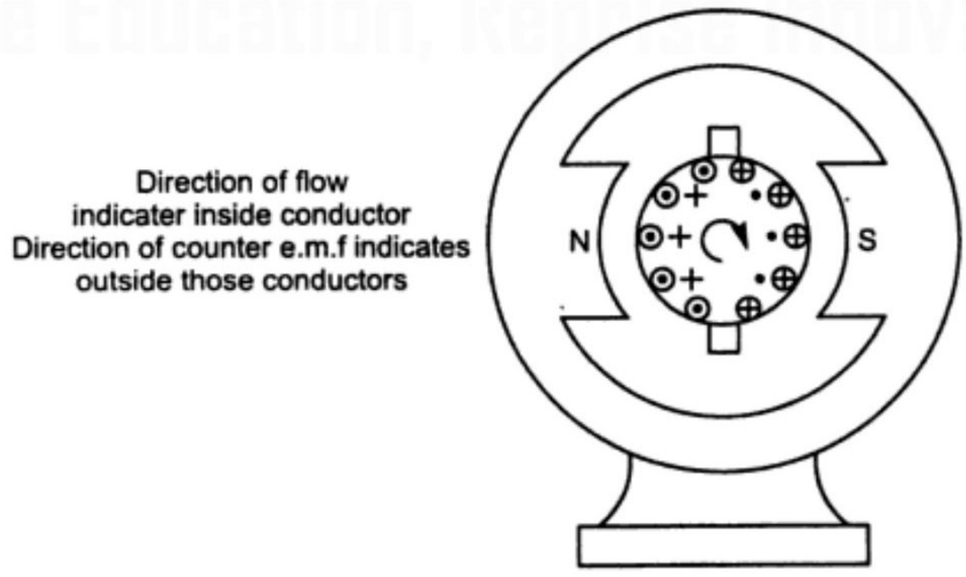

Fig. 1. *Back e.m.f. direction.*

Material com direitos autorais
Downloaded From : www.EasyEngineering.net

Downloaded From : www.EasyEngineering.net

Due to motor action the armature rotates and the armature conductors continuously cut through this resultant field. Therefore voltage generated in very same conductors which experiences force.

If no load is connected to the motor then the back e.m.f or counter e.m.f will be nearly equal to the applied voltage. The power developed by the armature I, in this case is just that power needed to overcome the rotational losses. All this mean that the armature current I_A is controlled and limited by the counter e.m.f. E_C, therefore

$$I_A = \frac{(V_L - E_C)}{R_A} = \frac{V_L K\varnothing_n}{R_A} \text{ amperes}$$

where V_L is applied voltage across the armature winding and R_A is the resistance of armature winding.

Speed of d.c. Machine

The speed of dc machine is expressed in rpm or rps (revolution per minute/second) the generated e.m.f. equation of a d.c. machine is given

$$E = \frac{PN\varnothing Z}{60A} \quad ...(i)$$

where E = generated e.m.f. in volts

P = total member of poles

Ø = flux in Weber

Z = total number of conductor and

A = number of parallel path

Now from above equation of e.m.f. we get,

$$N = \left(\frac{60A}{PZ}\right) \cdot \frac{E}{\varnothing} \quad ...(ii)$$

or,

$$N = \frac{E}{K\varnothing} \quad ...(iii)$$

where $K = \frac{PZ}{60A}$

From equation (*iii*) we can conclude that the speed of d.c. machine is directly proportional to the e.m.f. induced in armature coil and inversely proportional to the flux per pole in Weber. The equation of e.m.f. is similar for both motor and generator.

If the suffixes 1 and 2 are used in above equation of speed where 1 and 2 represents initial and final values respectively. *i.e.*

$$N_1 = \frac{E_1}{K\varnothing_1} \quad ...(i)$$

$$N_2 = \frac{E_2}{K\varnothing_2} \quad ...(ii)$$

Dividing equation (*i*) by equation (*ii*), we get,

Copyrighted material
Downloaded From : www.EasyEngineering.net

Downloaded From : www.EasyEngineering.net

$$\frac{N_1}{N_2} = \left(\frac{E_1}{E_2}\right)\left(\frac{\varnothing_1}{\varnothing_2}\right)$$

Torque Production in d.c. Machine

The electromagnetic torque produced in dc machines is expressed in terms of interaction between main field flux $\varnothing_f$ and armature mmf F_a. The torque is the very important parameter of the d.c. machine and can be derived as under. The voltage equation of a dc motor is

$$V_t = E + I_a R_A \quad ...(i)$$

Multiplying the above equation with armature current I_a we get,

$$V_t I_A = EI_a + I_a^2 R_A$$

$$V_t I_a = \text{Electrical power input to the armature + ohmic losses}$$

where $I_a^2 R_A$ = ohmic loss in the armature

Let T_e be the electromagnetic torque developed in the armature circuit.

Mechanical power developed by armature,

$$P_m = \omega T_e = 2\pi n T_e \quad ...(ii)$$

Also we know that,

$$P_m = EI_a = \omega T_e = 2\pi n T_e$$

where, P_m = mechanical power

Since, $E = \frac{nP\varnothing Z}{A}$, putting this value in equation (*ii*) we get,

$$\left(\frac{nP\varnothing Z}{A}\right) I_a = 2\pi n T_e$$

or, $$T_e = \left(\frac{nP\varnothing Z}{2\pi n A}\right) I_a = \left(\frac{P\varnothing z}{2\pi A.}\right) I_a$$

or, $$T_e = \left(\frac{PZ}{2\pi A}\right)\varnothing I_a \quad ...(iii)$$

The above equation is electromagnetic torque equation of d.c. machine.

$$T_e = K\varnothing I_a \quad ...(iv)$$

where, $K = \frac{PZ}{2\pi A}$

Hence from the above equation we can conclude that the electromagnetic torque T_e developed in dc machine is directly proportional to the product of the flux and the current flowing in armature *i.e.* $T_e \propto \varnothing I_a$.

In both dc generator and dc motor the torque equation is same.

Classification of d.c. Motors

d.c. motors are broadly classified into three categories. They are,

(*i*) d.c. series motor

Copyrighted material
Downloaded From : www.EasyEngineering.net

Downloaded From : www.EasyEngineering.net

(*ii*) d.c. shunt motor

(*iii*) d.c. compound motor

(*i*) *d.c.series Motor:* In d.c. series motor the field winding is connected in series with the armature winding which is shown below in figure.

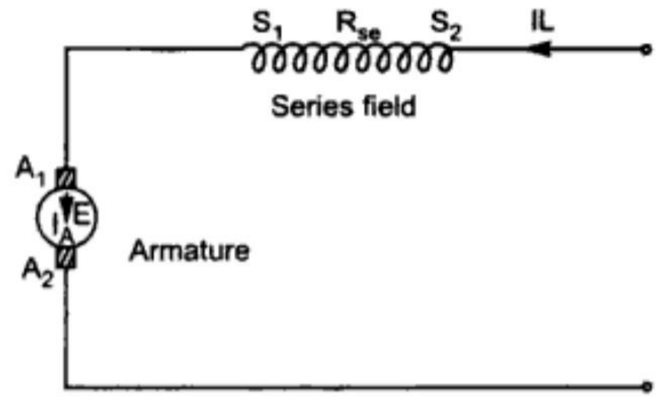

Fig. 2. *Circuit diagram of d.c. series motor.*

In series motor the load current is equal to the armature current *i.e.*,

$$I_L = I_A$$

By Kirchhoff's current law, for the above circuit

$$I = I_L = I_A \qquad \text{... (i)}$$

where I_f = series field current

I_A = armature current and

I = total resultant current in the motor.

The terminal voltage V_t can be written as

$$V_t = E + I\,(R_A + R_f) \qquad \text{...(ii)}$$

Multiplying (*i*) and (*ii*) we obtain the power expression of the d.c. series motor and can be given by

$$V.I = EI + I^2\,(R_A + R_f) \qquad \text{...(iii)}$$

So, the power input = mechanical power developed + losses in the armature winding + losses in field winding.

or

$$V.I = P_M + I^2R_A + I^2R_f \qquad \text{...(iv)}$$

From equations (*iii*) and (*iv*) it is clear that the

Power input in a d.c. series motor is equal to the mechanical power developed if the losses are neglected.

For d.c. series motor torque is directly proportional to the product of flux and the armature current and is given by

$$T \propto \varnothing I_A$$

where T = torque of d.c. motor, N-m

$\varnothing$ = flux produced, Wb

I_A = armature current, amp

Copyrighted material
Downloaded From : www.EasyEngineering.net

Downloaded From : www.EasyEngineering.net

Therefore $$\frac{N_2}{N_2} = \left(\frac{E_{b2}}{E_{b1}}\right) \cdot \left(\frac{\varnothing_1}{\varnothing_2}\right) \quad ...(iv)$$

Prior to the saturation the flux produced is directly proportional to the armature current.

$$\varnothing \propto I_A$$

Therefore equation (v) can be rewritten as

$$\frac{N_2}{N_2} = \left(\frac{E_{b2}}{E_{b1}}\right) \cdot \left(\frac{I_{A1}}{I_{A2}}\right) \quad ...(vi)$$

So consequently from (v) and (vi) we get the torque is directly proportional to the square of armature current *i.e.*

$$T \propto I_a^2$$

where N = speed of rotation in rpm.

E_b = Back e.m.f produced in armature in volts.

(*ii*) *d.c. Shunt Motor:* In d.c. shunt motor the field winding is connected is parallel with the armature winding. The circuit diagram is as drawn below:

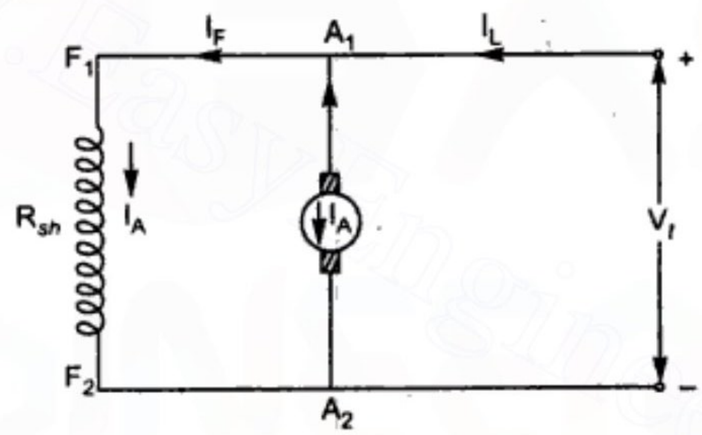

Fig. 3. *Circuit diagram of d.c. shunt motor.*

By KCL at node n, we get

$$I_L - I_{sh} - I_A = 0$$

or $$I_L = I_{sh} + I_A \quad ...(i)$$

where I_L = load current in Amp

I_{sh} = shunt field current in Amp

I_A = armature current in Amp

and the voltage equation can be given by the following equation

$V_t = I_{sh}R_{sh}$. For, shunt field winding.

and $V_t = E + I_A R_A$ For, armature winding circuit

Now power expression can be given by

Power input = mechanical power developed + losses in the armature + losses in the field

$$V_t I = P_m + I_A^2 R_A + I_{sh}^2 R_{sh}$$
$$= P_m + I_A^2 R_A + V_t I_{sh}$$

Copyrighted material
Downloaded From : www.EasyEngineering.net

Downloaded From : www.EasyEngineering.net

Since $V_t = I_{sh}R_{sh}$

or, $P_m = V_tI - V_tI_{sh} - I_A^2R_A = V_t(I - I_{sh}) - I_A^2R_A$

$= V_tI_A - I_A^2R_A = (V_t - I_AR_A)I_A.$

Therefore, $P_m = EI_A$

So, mechanical power developed is equal to the product of e.m.f. induced in motor and the current flowing in the armature (all losses are neglected).

For d.c. shunt motor, the flux $\varnothing_1 = \varnothing_2$

Therefore, $$N_2N_1 = \frac{E_{b2}}{E_{b1}} \quad ...(i)$$

From above expression we obtain that the torque produced in motor is directly proportional to that of armature current.

$$T_a \propto I_a$$

or, $$T_a = KI_a \quad ...(ii)$$

(*iii*) *d.c. Compound Motor:* In d.c. compound motor both series and shunt field are used. According to connection of series and shunt field, the compound motors are classified in two category.

(*a*) Long shunt compound motor and

(*b*) Short shunts compound motor.

The circuit diagrams for both long shunt and short shunt compound motor is given below

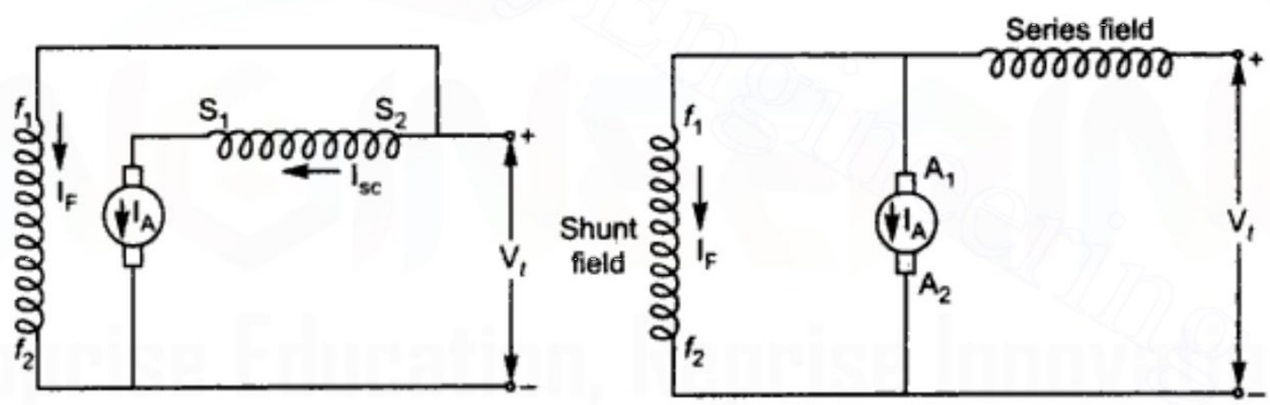

Fig. 4. *D.C. compound motor (a) Long shunt (b) Short shunt.*

The long shunt compound motor is similar to the long shunt compound generator. Hence in case of motor,

$I_{se} = I_A$ *i.e.* the series field current is equal to the armature current.

and $I_L = I_a + I_{sh}$

where I_L = load current

I_A = armature current

I_{sh} = Shunt field winding current

The d.c. compound motor may be cumulatively compounded or differentially compounded.

Starting of d.c. Motor

Why we need starter in d.c. motor ?

Copyrighted material
Downloaded From : www.EasyEngineering.net

Downloaded From : www.EasyEngineering.net

In d.c. motor we know that,

$$V_t = E_b + I_A R_A$$

where V_t = terminal or supply voltage in volts

E_b = back e.m.f. of motor in volts

I_A = current flowing in armature conductor in ampere

R_a = armature resistance in ohm.

When the motor is at rest the back e.m.f. E_b is equal to zero. With the application of voltage to the stationary armature, the armature of the dc motor draws a very large current because a very low resistance of the armature. Hence during starting we apply voltage from a low value, which is increased gradually to rated voltage. Also for overcoming this starting problem some resistance is inserted in series with the armature circuit to offset for the absence of back e.m.f.

The starter is used in dc motor for the reason listed below:

(*i*) Causes heavy sparking at the brushes and may destroy the commutator and brush gear.

(*ii*) Large torque is developed causing mechanical shock to the shaft.

(*iii*) Such heavy current cannot be drawn from the supply.

Starter for shunt motor : A starter used for a shunt connected d.c. motor is shown in figure. In the fig. 5, L, F and A denote line, field and armature respectively.

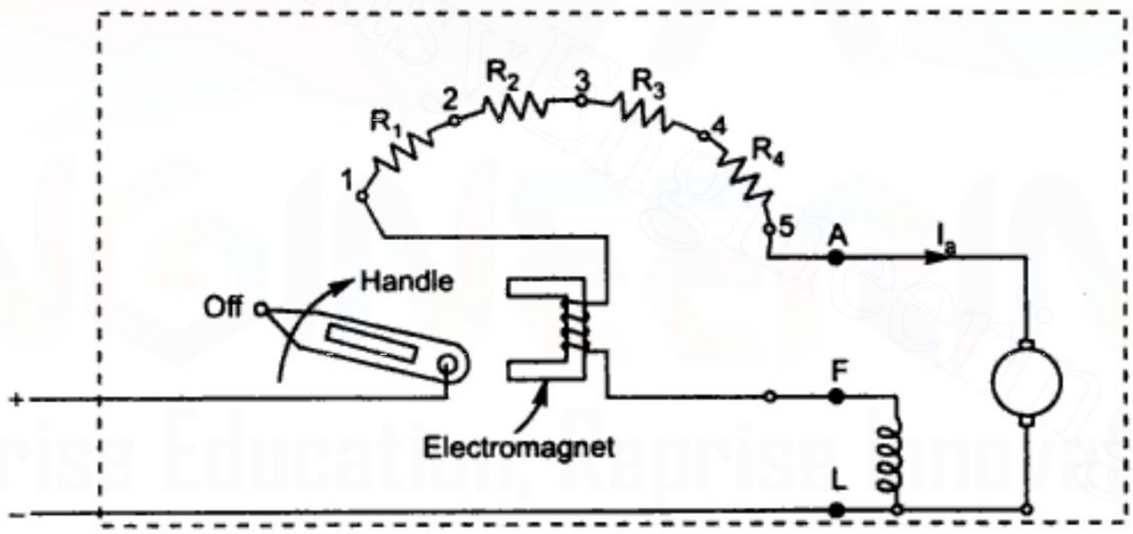

Fig. 5 *D.C. Three-point starter.*

In order to start the motor the switch S, is closed and starter arm is moved to position 1 as indicated 1, 2, 3, 4 and 5 are the several starting resisters. A holding coil is used which holds the switch and keeps in it required position. The holding coil is also connected to the shunt field in series. The starting resistor bank is connected in series with the armature winding in-order to avoid high current passage from the armature.

After the armature has accelerated sufficiently on first contact, the starter arm is slowly moved to following contacts until the iron keeper on the arm is held by the holding coil electromagnet. The diagram for the variation in armature current during starting period is shown below.

Copyrighted material
Downloaded From : www.EasyEngineering.net

Downloaded From : www.EasyEngineering.net

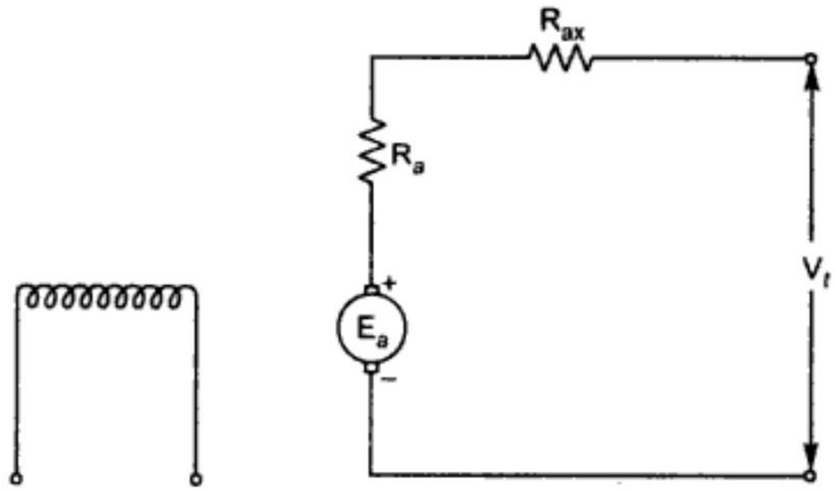

Fig. 6. *Armature current at start-up period.*

Circuit model of D.C. machine: The circuit diagram for the armature of d.c. generator as well as dc motor is drawn below:

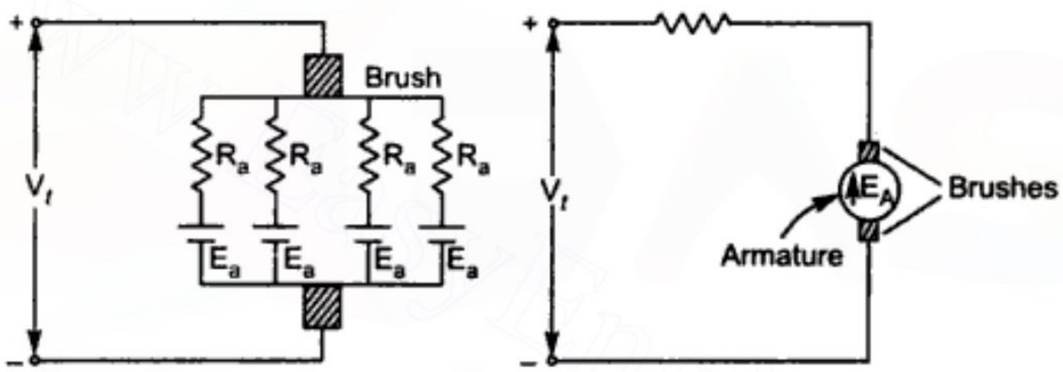

Fig. 7. *Armature circuit for d.c. machine.*

In case of generator the electrical energy is converted into mechanical energy. This conversion occurs only when the electromagnetic torque T_e to oppose the prime moves torque. This torque T_e in case of generator is known as counter torque. But in case motor the mechanical energy is converted into electrical energy. This occurs when the electromagnetic torque and the prime mover torque acts in direction.

Generating Mode

The circuit for generating mode is shown below.

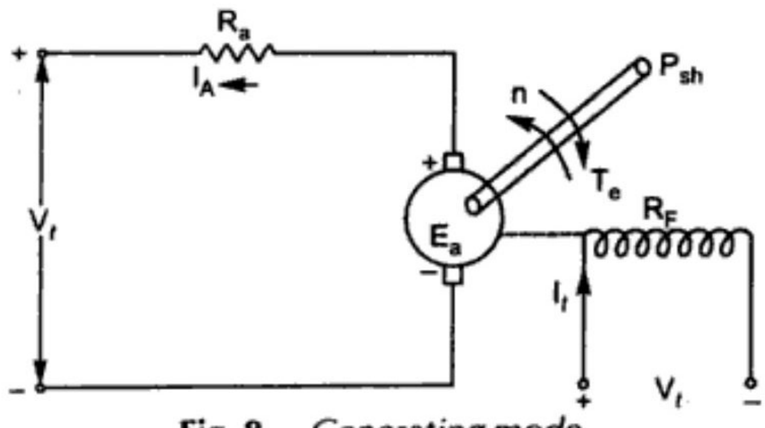

Fig. 8. *Generating mode.*

Copyrighted material
Downloaded From : www.EasyEngineering.net

Downloaded From : www.EasyEngineering.net

The d.c. machine operates in generating mode when the armature current I_A and the generated e.m.f. E_A are in the same direction but in generating mode the speed and electromagnetic torque in opposite direction.

For d.c. generators:

Mechanical power input = Electrical power output +(losses in armature winding + losses in field winding)

and $$V_t = E - I_A R_A$$

where, V_t = terminal voltage in volts

I_A = armature current in amperes

R_A = armature resistance in ohm.

Also, drop across the brush is usually taken as 1 or 2 V.

Therefore the above equation becomes

$$V_t = E - I_A R_A - 2$$

Multiplying above equation by I_A we get

$$V_t I_A = EI_A - I_A R_A - 2I_A$$

or Electrical power output = electromagnetic power–ohmic loss – brush contact loss.

Motoring mode: The circuit diagram for the motoring mode of d.c. machine is shown below:

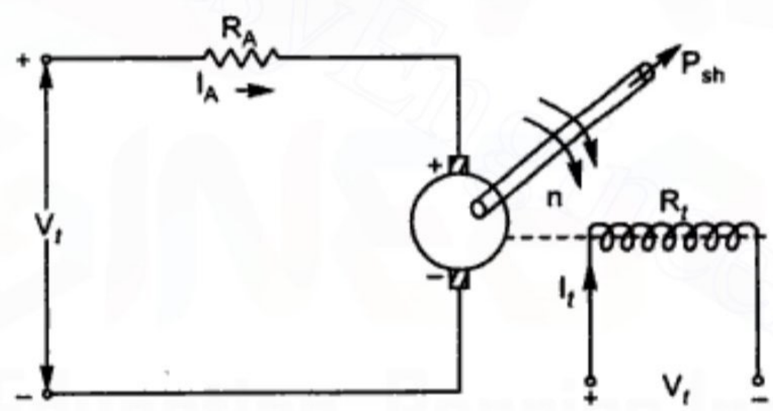

Fig. 9. *Motoring mode.*

In motoring mode the direction of armature current I_a and the armature e.m.f is in opposite direction having different polarity. The speed and the electromagnetic torque T_e is in the same direction during the motion operation.

For motion:

Electrical power outputs = Mechanical power – losses in armature – losses in field

and, $$V_t = E + I_A R_A$$

where all the terminology V_t,E,I_A and R_a are same as in generator.

When brush contact resistance is considered the equities becomes.

$$V_t = E + I_A R_A + 2$$

Multiplying above equation by I_A we get

$$V_t I_A = EI_A + I_A^2 R_A + 2I_A$$

Material com direitos autorais
Downloaded From : www.EasyEngineering.net

Downloaded From : www.EasyEngineering.net

Electrical power input = electromagnetic power + losses + brush contact.

Speed Control of d.c. Motor

Before describing the various methods of speed control of d.c. motor, some terminology which are frequently used are as follows:

Base speed: This is the speed at which the motor runs at rated armature voltage and rated field current. The base speed is generally equal to the nameplate speed of motor.

Speed regulation: If the speed changes no load to full load $\Delta\omega_m$, then speed regulation is defined as the ratio of $\Delta\omega_m$ to rated speed ω_m or full load speed.

$$\text{Speed regulation} = \frac{(\text{no load} - \text{full load speed})}{\text{full load speed}} = \frac{(n_{NL} - n_{FL})}{n_{FL}} = \frac{\Delta\omega_m}{\omega_m}$$

$$\text{Percentage speed regulation} = \left(\frac{\Delta\omega_m}{\omega_m}\right).100$$

Speed range: The speed range of d.c. machine is defined as the ratio of the maximum speed to the minimum speed of the motor.

Constant power drive: If the motor shaft power remains constant over a given speed range, then the system on which it is investigated is called constant power drive.

Speed control of d.c. motor: The speed control of dc motor can be performed by varying the following parameter of the dc motor:

1. By inserting an external resistor in series with the armature
2. By changing the flux $\varnothing$
3. By changing the terminal voltage V_t of the motor.

The speed of d.c. motor is given by

$$N = \frac{K(V_t - I_a R_a)}{\varnothing} \text{ rpm}$$

Hence speed can be varies by changing R_a, flux $\varnothing$ or terminal voltage V_t.

1. *By inserting an external resistor in series with the armature:* When an external resistor is connected in series with armature, the current through the armature is reduced, resulting in reduction of speed of the motor figure

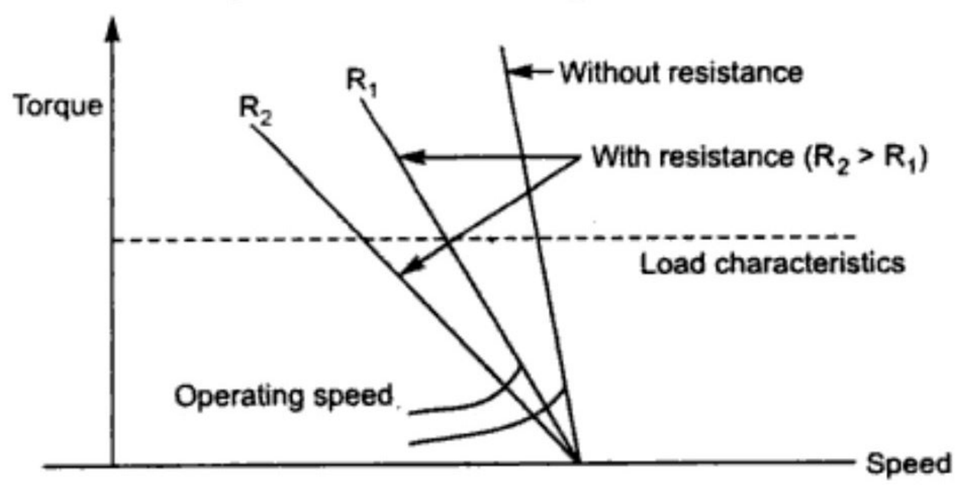

Fig. 10. *Resistor control.*

Material com direitos autorais
Downloaded From : www.EasyEngineering.net

Downloaded From : www.EasyEngineering.net

This method of speed control is very much simple and less expensive but due to the following disadvantage is not in practice:

(*i*) By adding resistance in the armature circuit the speed of the motor, compared to that without converting resistance is always lower.

(*ii*) At no-load condition this method is not applicable.

(*iii*) A considerable part of power is lost due to insertion of external resistance in armature as I_a^2 R losses occur.

(*iv*) It also results in loss of constant speed characteristics and the speed control is limited to 50% of rated speed.

The figure for armature resistance speed control of d.c. machine is shown.

2. *By changing the flux ∅:* It is one of the important methods of speed control of dc motor. In this method of speed control, the working flux ∅ is changed. In order to change the working flux ∅, a resistance is connected in series with the field winding. Normally the resistor used is of variable nature and called as a field rheostat. Due to the insertion of resistance in field winding, the field current decreases and the speed is increased with a reduction in ∅.

From the expression of speed *i.e.*

$$N = \frac{K(V - I_a R_a)}{\varnothing} \text{ rpm}$$

It is clear that speed of the dc motor is inversely proportional to the working flux ∅. So when ∅ decreases ultimately the speed increases. The figure for the field current control shown below:

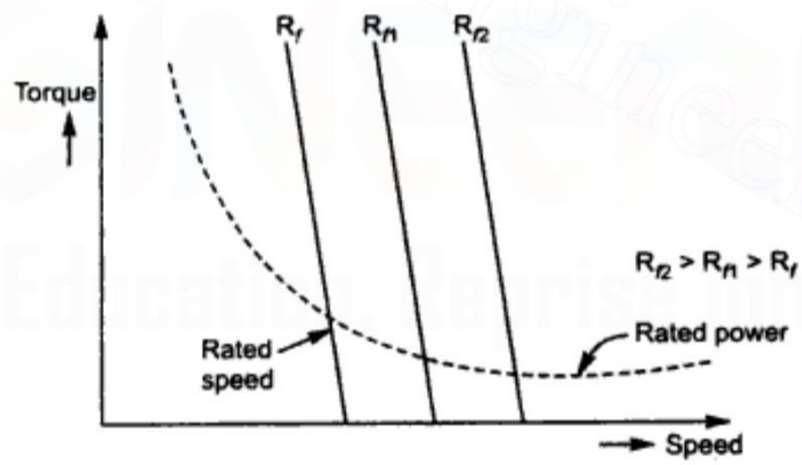

Fig. 11. *Flux control.*

The disadvantage of method (*i*) The speed can be raised only at which the motor normally runs and the load is fixed. (*ii*) The speed is increased without any reduction in shaft load.

3. *By changing the terminal voltage V_t of the motor:* This method is similar to the armature control method. The voltage control method lowers or decreases the speed. From the expression of speed, we see that the speed is directly proportional to terminal voltage:

$$N = \frac{K(V_t - I_a R_a)}{\varnothing} \text{ rpm}$$

Therefore by decreasing terminal voltage the speed of dc motor can be decreased. This method of speed control is similar to the armature control method, however it does not have

Material com direitos autorais
Downloaded From : www.EasyEngineering.net

Downloaded From : www.EasyEngineering.net

Speed Armature Current Characteristics

During constant supply voltage V_t and constant field current I_f the motor speed is effected by the I_aR_a drop and the demagnetizing effect of armature reaction. When the armature current I_a is increased, then the demagnetization effect of armature reaction also increases which result in reduction of field flux Æ. Therefore the speed of motor increases. But with the increases in I_a, the voltage drop I_aR_a increases and the numeration $(V_t - I_aR_a)$ decreases as a result the speed of motor decreases. In above equation (*iii*), when the armature current is increased the numeration decrement is more than that of denominator. So, the speed of d.c. motor drops slightly from its no-load speed N_{nl}. At no-load condition the armature current is negligible. So the speed of shunt motor at no-load is given by

$$N_{nl} = \frac{V_t}{K\varnothing} \qquad ...(iv)$$

If the effect of armature reaction is neglected, then the denominator will became constant. The figure, which illustrates the speed-current characteristic, is shown below.

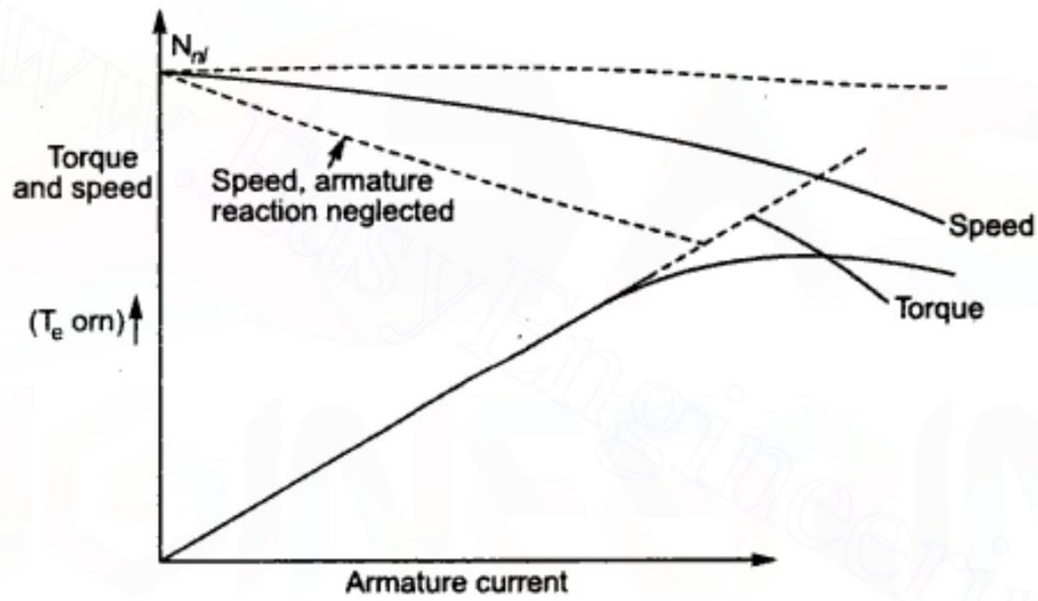

Fig. 13. *Speed-current and torque-current characteristic.*

Speed-Torque Characteristics (Shunt Motor)

Under the steady state condition, the expression for speed and torque is given below:

Speed, $$N = \frac{V_t - I_aR_a}{K\varnothing}$$

and Torque, $$T_e = K\varnothing I_a$$

or, $$I_a = \frac{T_e}{K\varnothing}$$

Putting the value of I_a in above equation we get

$$N = \frac{V_t}{K\varnothing} - \left(\frac{T_e}{K\varnothing}\right)\frac{R_a}{K\varnothing}$$

Material com direitos autorais
Downloaded From : www.EasyEngineering.net

Downloaded From : www.EasyEngineering.net

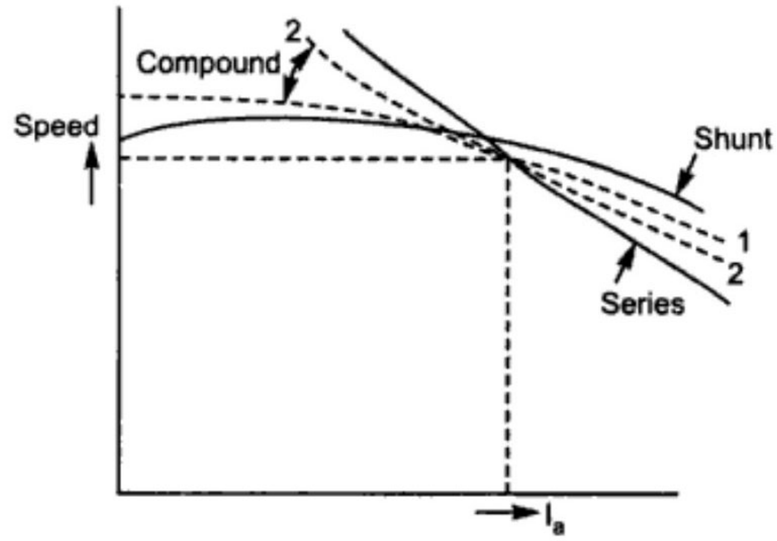

Fig. 17. *Speed-current characteristic of compound motor.*

Torque-Current Characteristics: The electromagnetic torque T_e is given by

$$T_e = K\varnothing I_a$$

$$T_e = K(\varnothing_{sh} + \varnothing_{se})\, I_a \text{ for d.c. compound motor.}$$

If the shunt field is stronger than series field then the torque current characteristics is denoted by curve 1 and when the series field is stronger than shunt field; denoted by curve 2. The Fig. 18 illustrating the torque current characteristics is shown below:

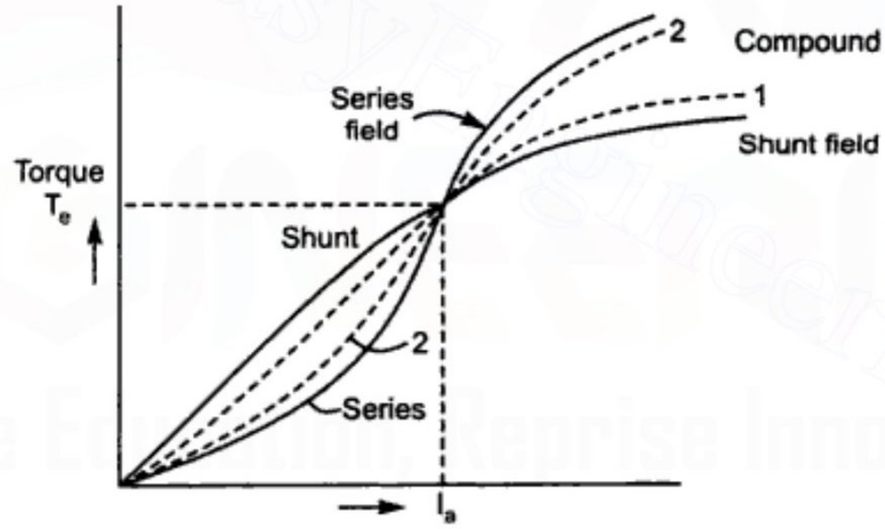

Fig. 18. *Torque-current characteristic of compound motor.*

Speed Torque Characteristics : The equation of torque for d.c. compound motor is given by

$$T_e = K(\varnothing_{sh} + \varnothing_{se})\, I_a \qquad ...(i)$$

or,

$$I_a = \frac{T_e}{K(\varnothing_{sh} + \varnothing_{se})} \qquad ...(ii)$$

Putting the value of I_a in given equation(speed equation)

$$N = \frac{1}{K(\varnothing_{sh} + \varnothing_{se})}\,[V_t - I_a(R_a + R_s)]$$

Material com direitos autorais
Downloaded From : www.EasyEngineering.net

Downloaded From : www.EasyEngineering.net

We get,

$$N = \left\{\frac{1}{K(\varnothing_{sh} + \varnothing_{se})}\right\}\left[\frac{V_t - T_e(R_a + R_s)}{K(\varnothing_{sh} + \varnothing_{se})}\right]$$

$$= \frac{V_t}{K(\varnothing_{sh} + \varnothing_{se})} - \frac{(R_a + R_s)T_e}{K^2(\varnothing_{sh} + \varnothing_{se})^2}$$

$$= \text{No load, } N_{nl} - \frac{(R_a + R_s)T_e}{K^2(\varnothing_{sh} + \varnothing_{se})^2} \quad ...(iii)$$

When the electromagnetic torque to increases the $\varnothing_{se}$ as well as armature current I_a increases. As a result the speed decreases in a cumulatively compounded motor due to the addition of flux $\varnothing_{sh}$ and $\varnothing_{se}$. In other words, the flux $(\varnothing_{sh} + \varnothing_{se})$ becomes more due to which the speed drops. Speed of d.c. motor is inversely proportional to the working flux. The figure speed-torque characteristic is shown below.

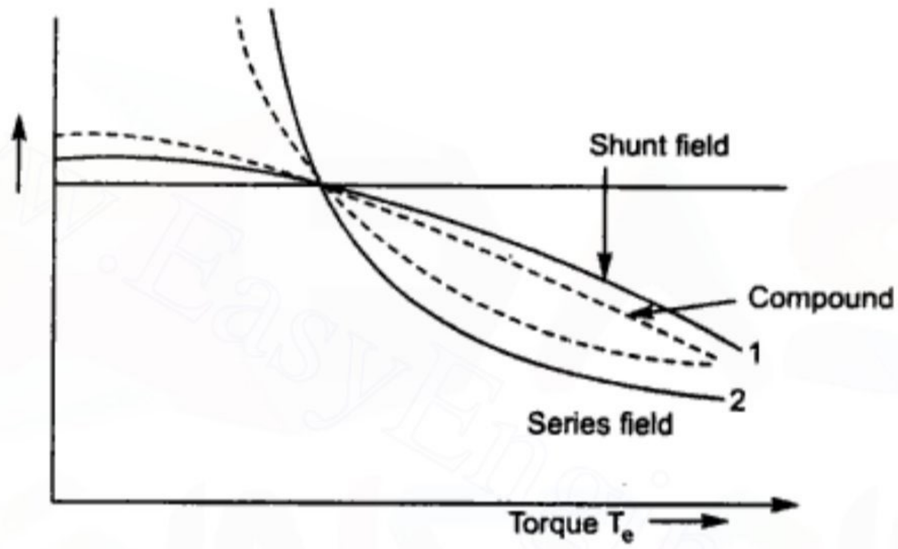

Fig. 19. *Speed-torque characteristic of d.c. compound motor.*

The number 1 and 2 curves denote the same as earlier mentioned in torque-current characteristics.

Losses in d.c. Machine

In d.c. machine like all the machine losses occur. In d.c. machine basically three of losses occur.

(*i*) Cooper loss
(*ii*) Iron loss
(*iii*) Rotational loss.

Copper loss: The copper losses occur in d.c. machine due to the resistance of the windings. The current flowing through these windings creates ohmic loss (*i.e.* I^2R losses). In all the windings *i.e.* field winding, interpoles, armature winding and compensating winding the ohmic loss takes place due to resistance in all the windings.

Iron loss: Due to the rotation of armature in magnetic field the iron parts as well as the conductors cut the magnetic field flux. An e.m.f. is induced in the iron part, which causes current to flow through these parts. These are the eddy currents. Losses due to eddy current are called eddy current loss. This can be reduced by varnished lamination of iron core, another loss occurring in iron part is due to Hysteresis.The hysteresis loss occur as the armature

Materiál chránený autorským právom
Downloaded From : www.EasyEngineering.net

Downloaded From : www.EasyEngineering.net

continuously moves through the alternating stationary magnetic field poles. Both the losses *i.e.* eddy current loss and hysteresis loss combinedly called iron loss.

Rotational loss: The rotational loss consists of bearing friction loss, friction of the brushes riding in the Commutator and the windage loss. This windage loss is small as compared to the other losses.

Efficiency of d.c. Machine

The efficiency of any machine is defined as the ratio of output to the input. In general the efficiency is given by,

$$\eta = 1 - \text{losses/input}$$

For motor,
$$\eta_m = \frac{1 - \text{losses}}{(V_t I_L + \text{losses})}$$

or
$$\eta_m = \frac{1 - \left(I_a^2 R_a + V_f I_f + W_0\right)}{V_t I_L}$$

For generators,
$$\eta_g = \frac{1 - \text{losses}}{(V_t L_L + \text{losses})}$$

or
$$\eta_g = \frac{1 - \left(I_a^2 R_a + V_f I_f + W_0\right)}{\left(V_t V_L + I_a^2 R_a + V_f I_f + W_0\right)}$$

where V_t and I_L are the output voltage and output current respectively for generator and for motor V_t and I_L are the input quantities and W_0, windage loss.

SOLVED NUMERICAL PROBLEMS

Example 1: *A 400 V pole shunt motor has an armature current 60 A the flux per pole 0.08 wb. The armature resistance is 0.3 ohm and brush contact drop is 1 volt per brush. If the machine has 780 armature conductors and a wave winding find the full load speed of the machine.*

Solution:
$$E_b = 400 \times 60 \times 0.3 \times 2 = 380 \text{ V}$$
$$E_b = \frac{P\phi ZN}{60\,A}$$
$$N = \frac{60\,E_b\,A}{P\,\phi\,Z} = \frac{60 \times 380 \times 2}{4 \times 0.08 \times 780} = 192 \text{ rpm.} \quad \textbf{Ans.}$$

Example 2: *A 140 V d.c. shunt motor has an armature resistance of 0.2 ohm and a field resistance 70 ohm. The full load line current is 40 A and the full load speed is 1800 rpm. If the brush contact drop is 3 V. Find the speed of the motor at half load.*

Solution:
$$\text{If} = \frac{140}{70} = 2\text{A}$$

At full load,
$$I_a = I_L - I_f = 40 - 2 = 38 \text{ A}$$
$$E_b = V - I_a R_a - \text{brush drop}$$
$$= 140 - 38 \times 0.2 - 3 = 129.4 \text{ V.}$$

Materiál chránený autorským právom
Downloaded From : www.EasyEngineering.net

Downloaded From : www.EasyEngineering.net

Since flux is constant, $E_b \times N = kN$

$$129.4 = k(1800)$$

or $$k = \frac{129.4}{1800}$$

when the load is reduced to half, the armature current will also be halved and will be 19 A.

$$E_b' = 140 - 19 \times 0.2 - 3 = 133.2 \text{ V}$$

The new speed N_1 is given by

$$133.2 = kN_1$$

$$N_1 = \frac{1}{K} 133.2 = \frac{133.2 \times 1800}{129.4}$$

$$= 1952.8 \text{ rpm.} \quad \textbf{Ans.}$$

Example 3: *A 250 V shunt motor on no-load runs at 1000 rev-per min. and takes 5 A. The total armature and shunt field resistances are respectivily 0.2 ohm and 210 ohm. Calculate the speed when loaded and taking a current of 50 A, if armature reaction weakens the field by 3%.*

Solution: V-Terminal voltage = 250 V

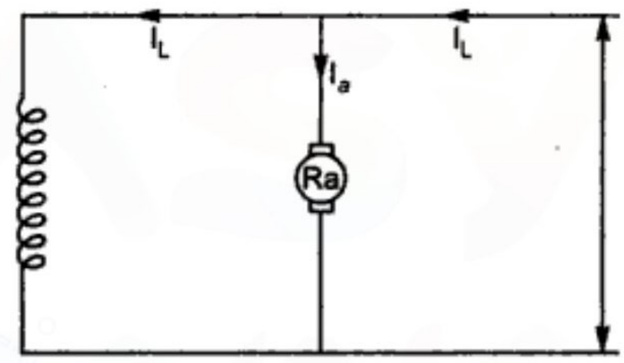

N_1 = Speed = 1000 rpm

R_a = Armature resistance = 0.2 Ω

R_f = Field resistance = 250 Ω

I_{L1} = Load current before armature reaction = 5A

I_{L2} = Load current after armature reaction = 50 A

Weakening of flux = 3%

$$\therefore \quad \phi_2 = 0.97 f_1$$

$$\therefore \quad I_f = \frac{250}{250} = 1\text{A}$$

$$\therefore \quad Ia_1 = I_{L1} - L_f = 5 - 1 = 4$$

$$E_{b1} = V - I_a R_a = 250 - 4 \times 0.2 = 249.2$$

$$E_{b2} = V - I_a R_a = 250 - 49 \times 0.2 = 240.2$$

We know for shunt machine

$$\frac{E_{b1}}{E_{b2}} = \frac{\phi_1 N_1}{\phi_1 N_1}$$

$$N_2 = \frac{\phi_1 N_1}{\phi_2} \times \frac{E_{b2}}{E_{b1}}$$

$$= \frac{1}{0.97} \times 1000 \times \frac{240.2}{249.2} = 994 \text{ rev/min.} \quad \textbf{Ans.}$$

Example 4 : *A 220 V shunt motor has an armature resistance of 0.5 ohm and takes a current of 40 A on full load. By has much the main flux be reduced to raise the speed by 50% if the developed torque is constant?*

Solution: For a dc machine $\frac{E_{b1}}{E_{b2}} = \frac{\phi_1 N_1}{\phi_2 N_2}$

Materiál chránený autorským právom
Downloaded From : www.EasyEngineering.net

Downloaded From : www.EasyEngineering.net

$$\left(\frac{N_2}{N_1}\right)^2 = \frac{\phi_1 I_{a2}}{\phi_1 I_{a1}}$$

Since losses are negligible, field coil resistance, as well as armature are negligible. It means that negligible. Hence back e.m.f. in each case equals the supply voltage.

$$\frac{N_2}{N_1} = \frac{E_{b2}}{E_{b1}} \times \frac{\phi_1}{\phi_2} = \frac{\phi_1}{\phi_2}$$

Putting this value in above, we get

$$\left(\frac{\phi_1}{\phi_2}\right)^2 = \frac{\phi_2 I_{a1}}{\phi_1 I_{a1}} \text{ or } \frac{I_{a2}}{I_{a1}} = \left(\frac{\phi_1}{\phi_2}\right)^2$$

Now $\phi_1 \propto 20$ and $\phi_2 \times \frac{I_{a1}}{2}$

$$\frac{I_{a2}}{20} = \left(\frac{20}{\frac{I_{a1}}{2}}\right)^3 \quad \text{or} \quad I_{a1} = [20 \times (40)^3]^{1/4}$$

$$= 33.64 \text{ A}$$

From $\frac{N_2}{N_1} = \frac{2I_{a1}}{I_{a2}}$, $N_2 = 714$ rpm. **Ans.**

Example 6: *A series motor takes a line current so A and develops a torque 100 Nm. Calculate the torque when (a) the line current is 35 A assuming that the magnetic circuit is unsaturated. (b) the line current is 60 A. Assuming that an increase in line current from 30 A to 60 A causses 60% increases in field flux.*

Solution:

(a) $T_e \propto \phi I_a \propto I_a^2$

$$T_e = 100\left(\frac{35}{30}\right)^2 = \frac{9.225}{9} = 136.11 \text{ N-m}$$

(b) $T_e \propto \phi I_a$

Now value of torque $= 100 \times 1.6 \times \frac{60}{30} = 320$ N-m. **Ans.**

EXERCISES

1. What are the various methods of speed control of d.c. motor? Explain in brief.
2. Which method of speed control speeds lower than rated speed? Explain reasons.
3. What is the function of a starter in a d.c. motor?
4. Why in the speed of a d.c. shunt motor is nearly constant, where as the speed of a d.c. series motor is variable?
5. What do you understand by 'back e.m.f. in d.c. motor, Explain the principle of torque production in a d.c. motor.

Materiál chránený autorským právom
Downloaded From : www.EasyEngineering.net

Downloaded From : www.EasyEngineering.net

6. Derive the torque equation of a d.c. motor.
7. Sketch and explain the speed-load characteristics of following d.c. machines.
   (*i*) Series motor
   (*ii*) Shunt motor
   (*iii*) Cumulatively compounded motor.
   (*iv*) Differentially compounded motor.
8. Why the starting current is very high in a d.c. motor and how the used of starter reduces the starting current to a safe value?
9. Why starter is necessary for the d.c. motors? Explain the various types of starter in d.c. motor with their operating principle.
10. What is the function of 'no volt release' and 'over volt release' in a starter? Discuss the operation of these two features in a shunt motor starter.
11. Explain the torque-slip characteristic of d.c. motor.
12. Starting from first principle, derive an expression for the electromagnetic torque of a d.c. motor.
13. Differentiate between the generator action and motor action of a d.c. machine.
14. Explain the phenomena between generator action and motor action of a d.c. machine.
15. Explain various differences between long shunt and short shunt compound motor with suitable diagram.
16. Explain why a small change in motor speed and back e.m.f will produce longer changes in armature current of a d.c. motor.
17. Explain the function of commutator in a d.c. motor. Also explain how it is different from commutation in generator.
18. A series motor has armature resistance of 0.8 ohm and field resistance of 0.4 ohm. It takes a current of 14 A from a 220 V supply and runs at 800 rpm. Find the speed at which it will run when connected in series with a 4 ohm resistance and taking the same current at the same supply voltage.
19. A d.c. motor develops a torque of 140 Nm at 1400 rpm. If the motor now runs at 1000 rpm, then obtain the new developed torque.
20. A d.c. series motor develops a torque of 20 Nm at 34 of load current. If the current is increased to 6 A, the calculate the new torque developed.
21. The armature of a shunt motor contains 0.8 ohm resistance. The motor is to run on a 120 V circuit. If the motor is suddenly thrown on the circuit while the armature is standing still (back e.m.f. in normal running being 110 V). Obtain the current drawn by the motor.
22. A 230 V d.c. motor takes a no-load current of 2 A and runs at 1200 rpm. In case the full load current is 40 A then calculate the speed at full load.
23. A d.c. motor develops a torque of the 110 Nm at 400 rpm. At 300 rpm obtain the torque developed.
24. A 4-pole wave wound dc armature has 294 conductors.
    Find out
    (*a*) flux per pole to generate 230 V at 1400 rpm.
    (*b*) electromagnetic torque at this flux when the armature current is 120 A.

Copyrighted material
Downloaded From : www.EasyEngineering.net

Downloaded From : www.EasyEngineering.net

25. The maximum current during starting for a 300 V shunt motor is to be limited to 125 A. The resistance of armature is 0.25 ohm. Find the resistance elements for a 12 element starter.

26. A shunt generator delivers 50 kW at 240 V and 380 rpm. The armature and field resistance are 0.04 and 40 ohm respectively. Calculate the speed of the machine when working as a motor taking an input of 40 kW at 240 V. Assume 1 V per brush for contact drop.

27. A 220 V series motor is which the total armature and the field resistance is 0.1 W is working with unsature field, taking 100 A and running at 800 rpm. Find out the speed at which the motor will run developing half the torque.

Copyrighted material
Downloaded From : www.EasyEngineering.net

Downloaded From : www.EasyEngineering.net

UNIT VII

16

Synchronous Machines

Alternating voltage is generated when armature is being rotated in a uniform magnetic field with stationary field poles. Alternating voltage can also be generated in stationary armature conductors when field poles are rotated. In alternators or synchronous generator, armature is kept stationary, while field system of a synchronous machine is excited by direct current and armature is rotated by a prime mover *i.e.*, by steam turbines, hydraulic turbines and diesel engines. The advantages of rotating field system and stationary armature are :

1. The voltage level of the field winding is comparatively low, and hence could be excitated with the help of slip rings.
2. In this an armature is a usually required to generate high voltages. In the stationary armature winding, high voltage terminals of the armature winding can be connected directly to the terminals.
3. In a stationary armature system, winding and insulation are less exposed to mechanical stress and vibration.

Synchronous machines are called "Synchronous" as their speed, is directly related to the supply frequency and running at the synchronous speed.

$$n_s = \frac{120f}{P} \text{ rpm}$$

where n_s is the synchronous speed in rpm,

P is the number of magnetic poles

f = Supply frequency in Hz (hertz).

Construction

Similar to other rotating machines, a synchronous machine consists of two basic parts *i.e.*, stator and rotor. The stator is stationary part *i.e.*, armature winding and rotor is rotating part called rotor *i.e.*, field winding the rotor is centred with in the stator so that the rotor axis is concentric with that of the stator. The space between the outside of the rotor and inside of the stator is called the air gap.

The rotor is slotted to accommodate the field winding. Rectangular slots with tapered teeth are milled out in the rotor, as a result rectangular conductors can be used for the field winding. The rotor is mounted on a shaft. The shaft is supported in bearings so that the rotor is free to rotate. The rotor is solidly fastened to the shaft so that the rotor and the shaft rotate at

Copyrighted material
Downloaded From : www.EasyEngineering.net

Downloaded From : www.EasyEngineering.net

the same speed. Therefore, the terms 'rotor speed', 'shaft speed' or machine speed all are the same thing and can be used interchangeably. The rotor and stator each have three basic parts, the core, the windings and the insulation. The purpose of the rotor and stator cores is to conduct the magnetic field through the coils of the windings.

The winding conductors are either of copper or aluminium and that could be in the form of coils of wire or heavy bars depending upon the current carrying capacity required. Normally each winding consists of several coils in series or series-parallel combination depending upon the voltage and current requirements of the machine. The ends of certain windings are brought out to terminals to allow easy contraction of supply.

Since the speed of rotor is high so insulation system requires should also have good mechanical properties therefore normally mica, asbestor and hard composition insulating materials are used.

In some machines, the windings of either the rotor or the stator may be placed around projecting magnetic pole pieces, called salient poles. When a core has salient poles of the coils of the winding are wound around the waists of the pole pieces. These narrower parts of the salient poles are called the-pole cores. The shaped ends of the poles are called the pole shoes. Their purpose is to provide the correct flux density distribution in the air gap.

Principle of Operation of Alternators

Alternators operate on the fundamental principles of electromagnetic induction. In the alternator, the stator accommodating a 3-phase winding is stationary, while the field system rotates. Fig. 1, shows the schematic diagram of a 3-phase alternator with stationary armature and rotating field system. When the field system is rotated by a prime mover, the stator conductors are cut by the magnetic flux and hence an e.m.f. is induced in the stator conductors which is given by,

$$e = Blv \text{ volts}$$

where B = instantaneous value of flux density in, tesla

l = length of the stator conductor in metre

v = speed of the conductor in m/s.

As the l and v are constant, the induced e.m.f e is directly proportional to flux density. Hence the e.m.f wave for the stator phase will be identical to the flux density wave. If the flux density produced by the field winding is sinusoidal in its distribution around the airgap, the voltage induced in the phase coils will be sinusoidal as shown in figure 2. In salient pole synchronous machines, a sinusoidal wave of flux density is closely obtained by shaping the pole shoe in such a way that the air gap gradually increases from centre to the pole tips. However, in non-salient pole synchronous machines the air gap is more or less uniform. In this type of synchronous machines a sinusoidal flux density is obtained by distributing the field winding in several slots. A further improvement on the output voltage waveform is made by making a coil span for the stator winding less than the pole pitch.

Copyrighted material
Downloaded From : www.EasyEngineering.net

Downloaded From : www.EasyEngineering.net

$$\therefore \qquad X_s = X_L + X_a \text{ ohm}$$

Synchronous Impedance

It is given as follows :

$$Z_s = R_a + j(X_L + X_a) = R_a + jX_s$$

$$Z_s = \sqrt{R_a^2 + X_s^2}$$

Equivalent Circuit Model and its Phasor Diagram

Fig. 2 shows the equivalent circuit model of a synchronous generator alternator.

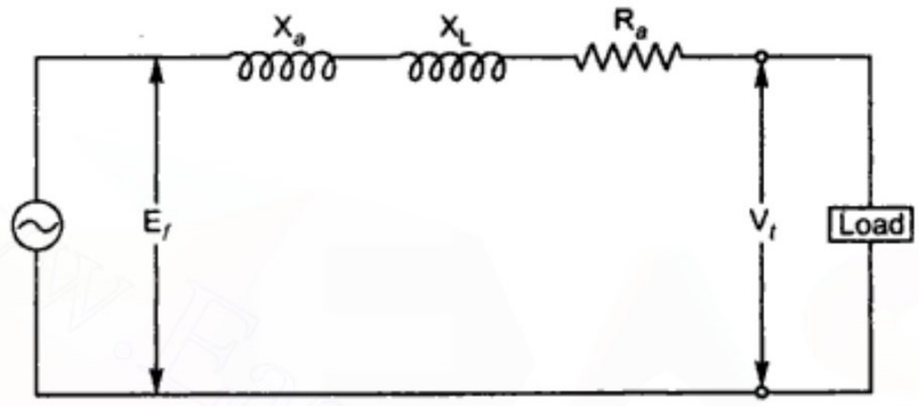

Fig. 2. *Equivalent circuit model of an alternator.*

Lagging Power Factor

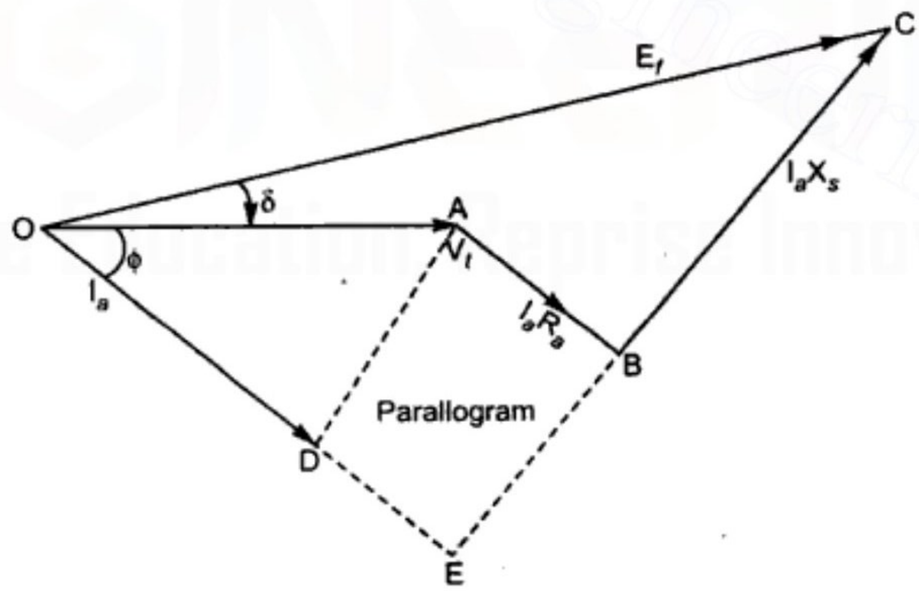

Fig. 3. *For lagging power factor load.*

$OC = E_f$ = no load e.m.f.

$OA = V_t$ = terminal voltage, in volt

I_a = armature current, amp

R_a = effective armature resistance, in ohm

Material com direitos autorais
Downloaded From : www.EasyEngineering.net

Downloaded From : www.EasyEngineering.net

X_s = synchronous reactance

$\cos\phi$ = power factor

δ = power angle or torque angle

$AB = I_a R_a$

$BC = I_a X_s$

For diagram it can be written as

$$OC^2 = OE^2 + EC^2$$

$$= (OD + DE)^2 + (EB + BC)^2$$

$$E_f^2 = (V_t \cos\phi + I_a R_a)^2 + (V_t \sin\phi + I_a X_s)^2$$

or

$$E_f = \sqrt{(V_t \cos\phi + I_a R_a)^2 + (V_t \sin\phi + I_a X_s)^2}$$

Unity Power Factor

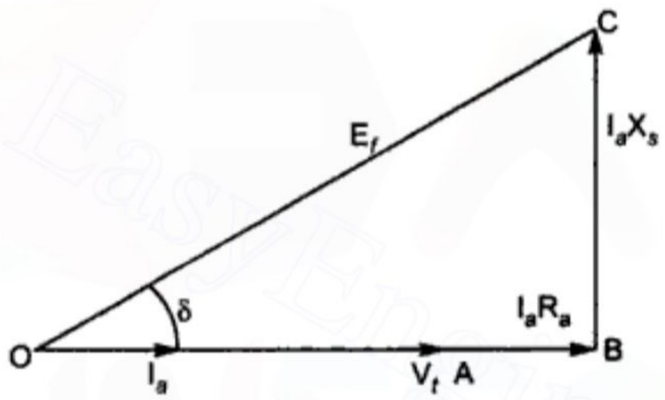

Fig. 4

$$OC^2 = OB^2 + BC^2$$

$$= (OA + AB)^2 + BC^2 \qquad [\phi = 0^\circ$$

$$E_f^2 = (V_t \cos\phi + I_a R_a)^2 + (I_a X_s)^2 \qquad \cos\phi = \cos 0^\circ$$

$$E_f = \sqrt{(V_t \cos\phi + I_a R_a)^2 + (I_a X_s)^2} \qquad = 1]$$

$$E_f = \sqrt{(V_t + I_a R_a)^2 + (I_a X_s)^2}$$

Leading Power Factor

For figure, it can be written as

$$OC^2 = OD^2 + DC^2 = (OE + ED)^2 + (DB - CB)^2$$

$$\therefore \quad E_f^2 = (V_t \cos\phi + I_a R_a)^2 + (V_t \sin\phi - I_a X_s)^2$$

or

$$E_f = \sqrt{(V_t \cos\phi + I_a R_a)^2 + (V_t \sin\phi - I_a X_s)^2}$$

The angle between E_f and V is called the power angle or torque angle of the alternator.

Material com direitos autorais
Downloaded From : www.EasyEngineering.net

Downloaded From : www.EasyEngineering.net

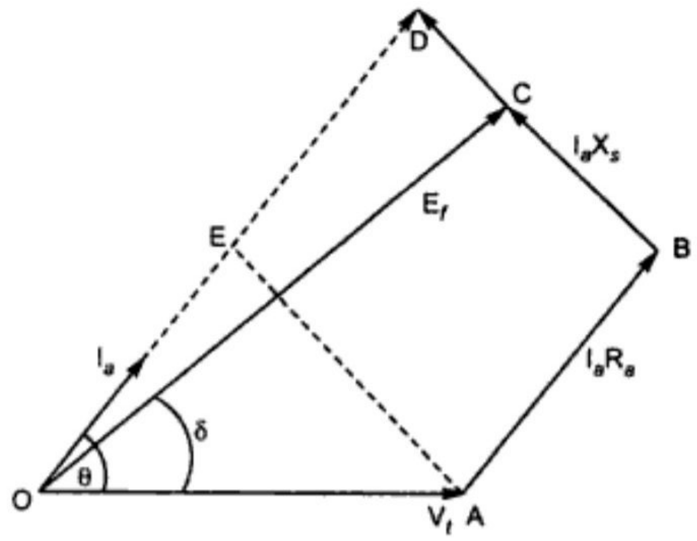

Fig. 5. *Phasor diagram of an alternator at leading power factor.*

Measurement of synchronous impedance: To measure the synchronous impedance the following tests are performed :

(*i*) Open circuit characteristic test.

(*ii*) Short circuit characteristic test.

Open Circuit Characteristic (OCC) Test

The alternator is run at the rated synchronous speed the armature terminals are kept open *i.e.*, all loads are disconnected, as shown in figure.

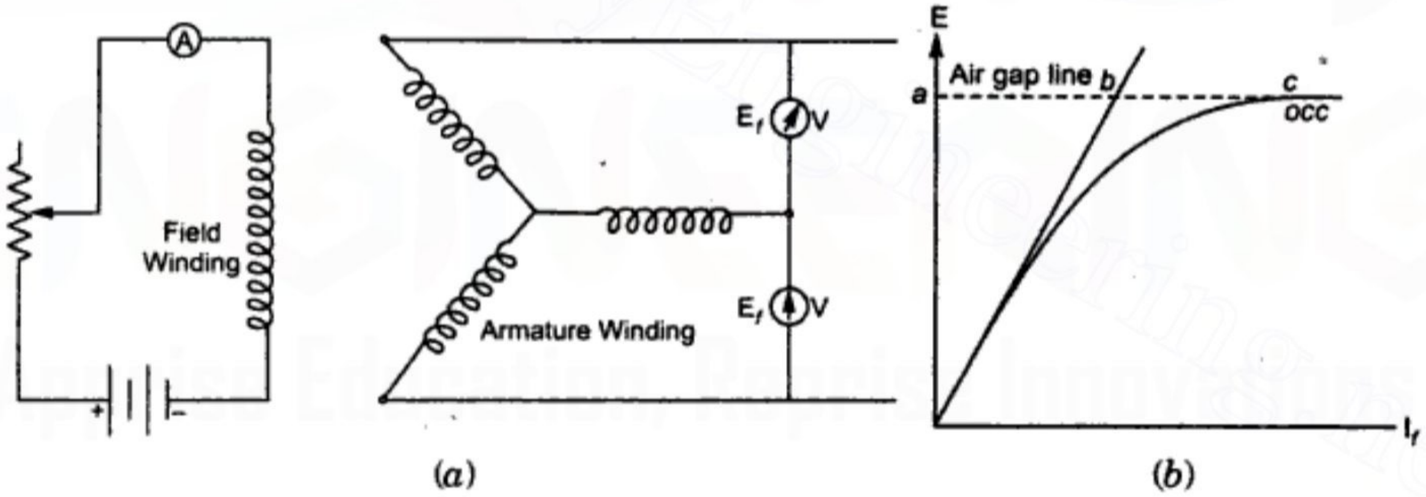

Fig. 6

Initially the field current is set to zero, then gradually the field current is gradually increased so that the final value of E_f should be 25 to 30% higher than the rated voltage. Figure SM-6 shows the OCC with field current along abscissa and e.m.f along ordinate. The OCC will not be straight line because of saturation in the iron part of the magnetic circuit.

Short Circuit Characteristic (SCC) Test

To find the short circuit characteristic (SCC), the speed of the alternator be rated speed. The armature terminals are short circuited by an ammeter as shown in Fig. 7(a). The field current is gradually increased from zero until the short circuit armature current has reached its the full load value. The reading should be taken in a short time to avoid armature overheating. Fig. 7(b) shows the SCC of an alternator.

Material com direitos autorais
Downloaded From : www.EasyEngineering.net

Downloaded From : www.EasyEngineering.net

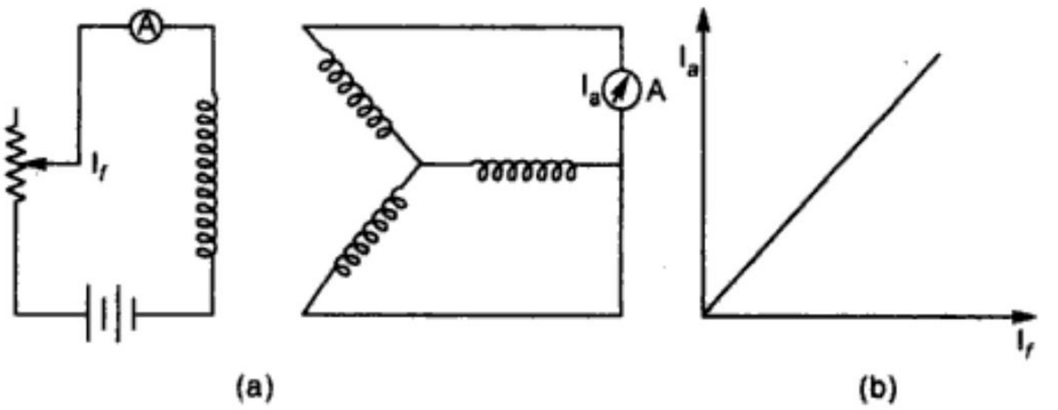

Fig. 7. *(a) Short circuit test of an alternator* *(b) SCC of an alterantor.*

Synchronous impedance Z_s can be defined with the above two test results as follows :

$$Z_s = \frac{\text{Open circuit terminal voltage for a certain field current}}{\text{Short circuit current for the same field current}}$$

Voltage Regulation

Voltage regulation of a synchronous machine is defined as the change in terminal voltage expressed as a percentage of rated voltage when load at a given power factor is removed. The speed and field current remains constant.

$$\therefore \text{ Per unit voltage regulation} = \frac{E_f - V}{V}$$

$$\text{and percentage voltage regulation} = \frac{E_f - V}{V} \times 100$$

where E_f is no-load excitation voltage and V is full load terminal voltage. Voltage regulation depends on p.f. of load. It can be seen from these characteristics that the regulation of the alternator for a power factor of 0.8 lagging is greater than that at unity power factor. For leading power factor, voltage regulation may be positive or negative due to decrease of E_f.

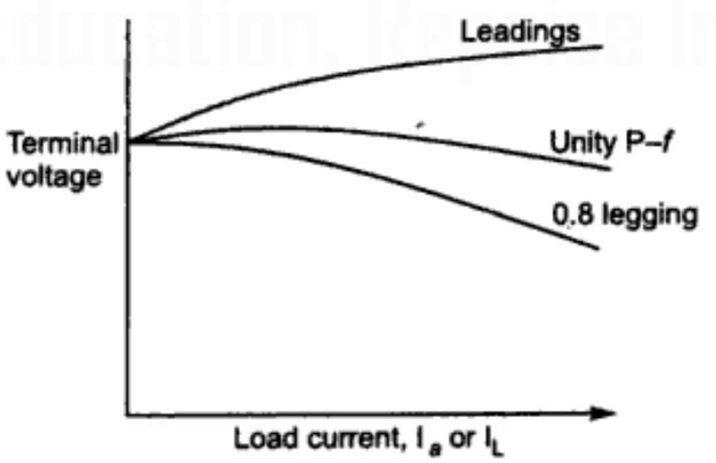

Load Characteristics

Fig. 8

Copyrighted material
Downloaded From : www.EasyEngineering.net

Downloaded From : www.EasyEngineering.net

Importance of Voltage Regulation is as follows

(*i*) Voltage rise must be known during throwing all the load because the winding insulation must be able to with stand the voltage.

(*ii*) The usage of automatic voltage control is determined by voltage regulation.

(*iii*) Voltage regulation affects the steady state short-circuit conditions and stability.

(*iv*) Voltage regulation also affacts the parallel operation.

Power Delivered by Alternator

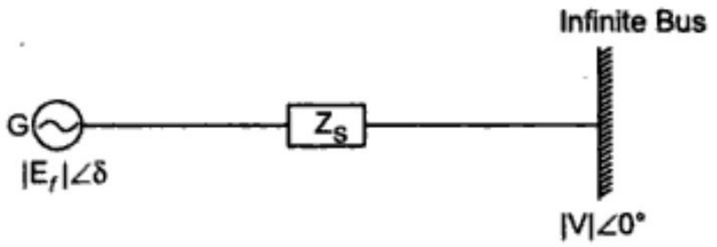

Generator connected to infinite box

Fig. 9. *Generator connected to infinite box.*

Let $|E_f|$ is the magntiude of excitation voltage of the generator, δ is power angle, $|V|$ is magnitude of infinite bus voltage, I_a is armature current, Z_s is synchronous impedance of the alternator, R_a is effective resistance, and X_s is synchronous reactance.

Then, $$Z_s = |Z_s| \angle\phi$$

$$Z_s = (R_a + jX_s) = \sqrt{R_a^2 + X_s^2} \ \angle \tan^{-1}\left(\frac{X_s}{R}\right)$$

Therefore current, $$I_a = \frac{|E_f|\angle\delta° - |V|\angle 0°}{Z_s \angle\phi°} \text{ and } I_a{}^* = \frac{|E_f|\angle -\delta° - |V|}{|Z_s|\angle -\phi°}$$

Complex power delivered by alternator per phase to infinite bus is given by,

$$S = (P + jQ) = |V| \, I_a{}^*$$

$$= |V| \left[\frac{|E_f|\angle -\delta - |V|}{|Z_s|\angle -\phi}\right] = \left[\frac{|E_f||V|}{|Z_s|}\angle\phi - \delta - \frac{|V|^2}{|Z_s|}\angle\phi\right]$$

$\therefore$ $$P = \frac{|E_f||V|}{|Z_s|}\cos(\phi - \delta) - \frac{|V|^2}{|Z_s|}\cos\phi$$

and $$Q = \frac{|E_f||V|}{|Z_s|}\sin(\phi - \delta) - \frac{|V|^2}{|Z_s|}\sin\phi$$

Practically R_a is very small and it can be neglected

$\therefore$ $$\phi = \tan^{-1}\left(\frac{X}{R_a}\right) \approx 90°$$

or $$|Z_s| = |X_s|$$

Copyrighted material
Downloaded From : www.EasyEngineering.net

Downloaded From : www.EasyEngineering.net

So, the real power,

$$P = \frac{|E_f||V|}{X_s}\cos(90° - \delta)$$

$$P = \frac{|E_f||V|}{X_s}\sin\delta$$

where $$P_m = \frac{|E_f||V|}{X_s}$$ is maximum power limit.

While,

$$Q = \frac{|E_f||V|}{X_s}\sin(90 - \delta) - \frac{|V|^2}{X_s}$$

$$Q = \frac{|V|}{X_s}\left(|E_f|\cos\delta - |V|\right)$$

Following three cases arises:-

(*i*) If $|E_f|\cos\delta > V$, alternator is over excited and it delivers reactive power to the infinite bus. Under this condition, the alternator is operating at lagging power factor.

(*ii*) If $|E_f|\cos\delta = V$, alternator is normally excited and it neither delivers nor absorbs reactive power from the infinite bus. Under this condition, the alternator is operating at unity power.

(*iii*) If $|E_f|\cos\delta < V$, alternator is under excited and it absorbs reactive power from the infinite bus. Under this condition, the alternator is operating at leading power factor.

Synchronous Motors Working Principle

A three phase synchronous motor is quite similar to a 3-phase alternator in basic construction. As such it consists of a 3-phase winding on the stator and a field winding on the rotor. Fig. 10 shows the schematic diagram of a 3-phase synchronous motor, illustrating its principle of operation. A 3-phase balanced supply is fed to the 3-phase stator winding, as a result a magnetic field of constant magnitude rotating at synchronous speed is produced in the stator.

Let the stator have two poles N and S. These poles will be rotating at synchronous speed. Let the direction of rotation be clockwise as shown in Figure SM-10. Suppose the rotor of the synchronous motor is stationary in the position shown in figure and the stator poles N and S occupy the positions *a* and *b* respectively at a certain instant. Under this condition, a repulsive force (like poles) will act upon the rotor and it has a tendency to rotate in the anti clockwise direction. The positions of the stator poles N and S will be interchanged alter half a period, *i.e.*, N is at *b* and S at *a*. Hence, a force of attraction will act upon the rotor and it has a tendency to rotate in a clockwise direction. However, the rotor will not be in a position to respond to this alternating torque and such it would remain at rest. Hence, a 3-phase synchronous motor does not have a self starting torque. Now suppose the rotor is rotated by an external means in a clockwise direction and if the rotation of the rotor is to be maintained, then two essential conditions must be satisfied, *viz.*, (*i*) stator poles S and N must be at the position *a* and *b* respectively as in Fig. 10 and (*ii*) the rotor and stator poles must continued to occupy the same relative positions. The second condition can be fulfilled only when the rotor keeps in step with the revolving field of the stator. Hence, the rotor of 3-phase synchronous motor must run at a synchronous speed fixed by the number of poles and the frequency.

Copyrighted material
Downloaded From : www.EasyEngineering.net

Downloaded From : www.EasyEngineering.net

In order to start the 3-phase synchronous motor, it is brought up to the rated speed by some external means. Then, it is synchronized to the supply under this condition the motor is floating in the bus bar. Now the prime mover is disconnected and the machine will start behaving as synchronous motor drawing power from the supply.

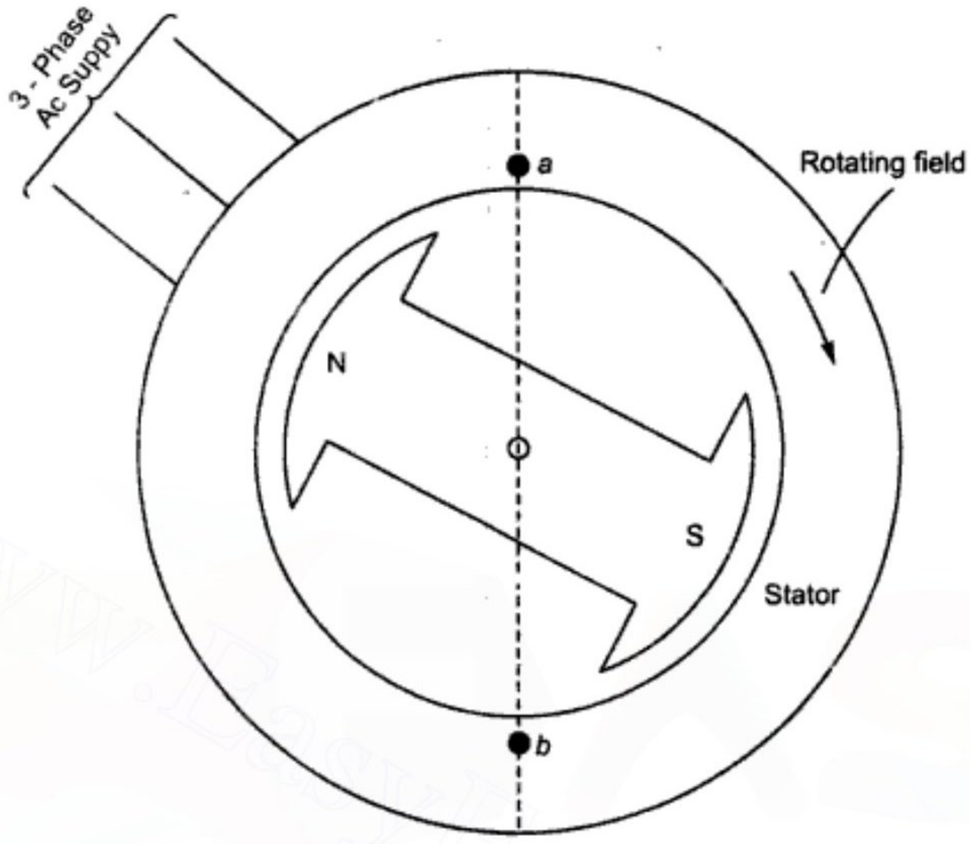

Fig. 10. *Principle of operation of synchronous motor.*

The equivalent and phasor diagram of synchronous motor is shown in Fig. 11.

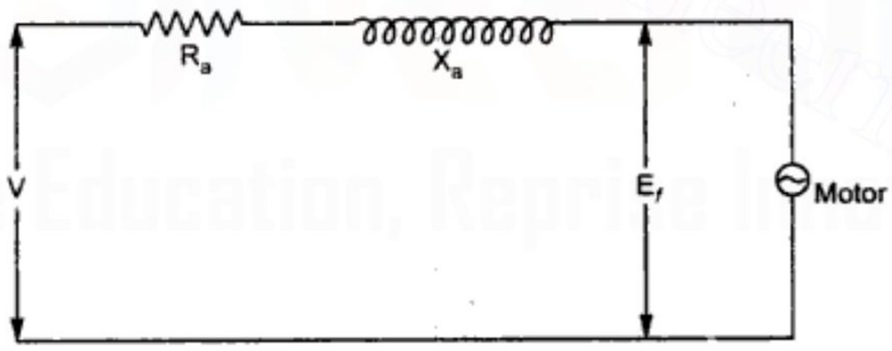

Fig. 11. *Equivalent circuit diagram of synchronous motor.*

At lagging power factor,

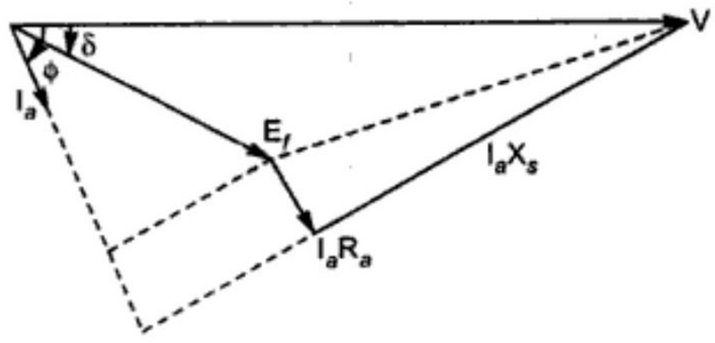

Fig. 12

Copyrighted material
Downloaded From : www.EasyEngineering.net

Downloaded From : www.EasyEngineering.net

$$E_f = \sqrt{\left[(V\cos\phi - I_a R_a)^2 + (V\sin\phi - I_a X_s)^2\right]}$$

At unity power factor,

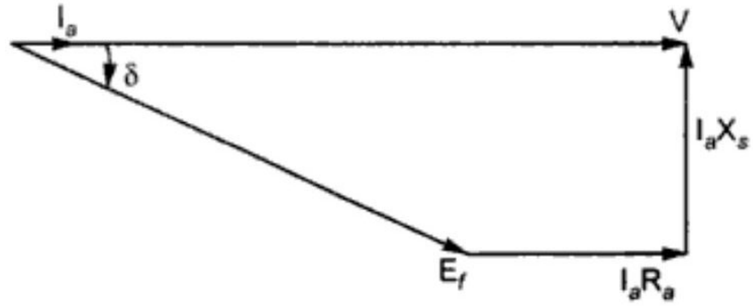

Fig. 13

$$E_f = \sqrt{(V - I_a R_a)^2 + (I_a X_s)^2}$$

At leading power factor,

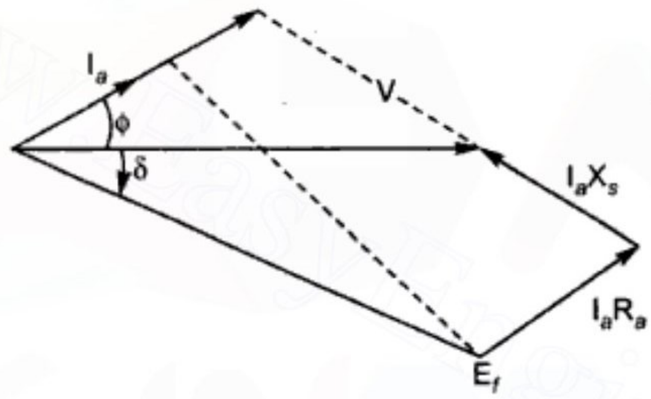

Fig. 14

$$E_f = \sqrt{(V\cos\phi - I_a R_a)^2 + (V\sin\phi + I_a X_s)^2}$$

Power Developed by Synchronous Motor

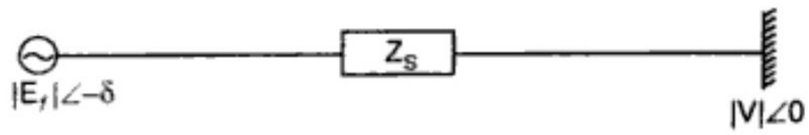

Fig. 15. *Synchronous motor connected to Infinite bus.*

The synchronous motor is connected to the infinite bus as shown in above figure.

The current drawn $$I_a = \frac{|V| - |E_f|\angle-\delta}{Z_s\angle\phi}$$

$$\therefore \quad I_a^* = \frac{|V| - |E_f|\angle\delta}{Z_s\angle-\phi}$$

Power developed by the motor per phase is given by

Copyrighted material
Downloaded From : www.EasyEngineering.net

Downloaded From : www.EasyEngineering.net

Flux per pole, $\phi = 25 \times 10^{-3}$ Wb

Generated e.m.f. per phase, $E_{Ph} = 4.44\ kw\ f\phi T$ Volts

$= 4.44 \times 0.96 \times 50 \times 25 \times 10^{-3} \times 240$

$= 1279$ Volts.

(*iii*) The stator is star connected, as such

the line e.m.f. $E_L = \sqrt{3}\ E_{Ph}$

$= \sqrt{3} \times 1279 = 2215$ Volts. **Ans.**

Example 2: *A 3.3 kV, three phase star connected alternator has a full load current of 100 A. Under short circuit condition, it takes 5 A field current to produce full-load short circuit current. The e.m.f of open circuit for the same excitation is 700 volt (line to line). The armature resistance is 1.0 Ω/phase. Determine synchronous reactance per phase and regulation for (i) 0.8 Pf lagging and (ii) 0.9 Pf leading.*

Solution :

Terminal voltage/phase during O.C.C. $= \dfrac{700}{\sqrt{3}} = 404.15$ Volt

Synchronous impedance is expressed as :

$$Z_s = \left.\frac{\text{O.C. Voltage}}{\text{S.C. Voltage}}\right|_{\text{for same field excitation}}$$

$$= \frac{404.15}{100} = 4.042\ \Omega$$

Synchronous reactance $X_s = \sqrt{Z_s^2 - R_a^2}$

$$= \sqrt{(4.042)^2 - (1)^2} = 3.92\ \Omega$$

(*i*) Percentage regulation for 0.8 p.f. lagging

Rated phase voltage, $V = \dfrac{3.3 \times 1000}{\sqrt{3}} = 1905.3$ Volts.

$$E_0 = \sqrt{(V\cos\phi + I\,R_a)^2 + (V\sin\phi + I\,X_s)^2}$$

$$= \sqrt{(1905.3 \times 0.8 + 100 \times 1)^2 + (1905.3 \times 0.6 + 100 \times 3.92)^2}$$

$$= \sqrt{2638155.6 + 1545496.5}$$

$$\begin{cases} \cos\phi = 0.8 \\ \text{so, } \phi = 36.86 \\ \sin\phi = 0.6 \end{cases}$$

$= 2045.39$ Volt

$\therefore$ Percentage regulation $= \dfrac{E_0 - V}{V} \times 100 = \dfrac{2045.39 - 1905.3}{1905.3} \times 100 = 7.35\%$

Bahan dengan hak cipta
Downloaded From : www.EasyEngineering.net

Downloaded From : www.EasyEngineering.net

(*ii*) Percentage regulation for 0.8 p.f. leading :

$$E_0 = \sqrt{(V\cos\phi + I R_a)^2 + (V\sin\phi - I X_s)^2} \quad \begin{cases} \cos\phi = 0.9 \\ \phi = 25.84° \\ \sin\phi = 0.44 \end{cases}$$

$$= \sqrt{(1905.3 \times 0.9 + 100 \times 1)^2 + (1905.3 \times 0.44 - 100 \times 3.92)^2}$$

$$= \sqrt{(1814.77)^2 + (446.33)^2} = 1868.85 \text{ Volt}$$

$$\therefore \text{ Percentage regulation } = \frac{E_0 - V}{V} \times 100$$

$$= \frac{1868.85 - 1905.30}{1905.30} \times 100 = -1.91\%. \textbf{ Ans.}$$

Example 3: *A 440 V, single phase synchronous motor gives a net output mechanical power of 7.5 kW and operates at 0.9 p.f. lagging. If effective resistance is 0.8 Ω. If the iron and mechanical losses are 550 W and excitation losses are 750 W. Calculate (i) armature current and (ii) efficiency.*

Solution :

Given supply voltage	= 440 V
Net output mechanical power	= 7.5 Ω
Power factor	= 0.9 lagging
Effective resistance	= 0.8 Ω
Iron and mechanical losses	= 550 W
Excitation losses	= 750 W

(*i*) *Armature Current :*

Let I be the input armature current

Therefore,

Power input $= VI\cos\phi$

$= 440 \times I \times 0.9 = 396\ IW$

Power output = Power input – Mechanical losses – Copper losses

$$7500 = 396\,I - 550 - I^2 \times 0.8$$

$$0.8\,I^2 + 550 + 7500 - 396\,I = 0$$

$$0.8\,I^2 - 396\,I + 8050 = 0$$

$$I^2 - 495\,I + 10062.5 = 0$$

$$I_{1,2} = \frac{-b + \sqrt{b^2 - 4ac}}{2a}$$

$$I_{1,2} = \frac{495 \pm \sqrt{(-495)^2 - 4 \times 1 \times 10062.5}}{2 \times 1}$$

Bahan dengan hak cipta
Downloaded From : www.EasyEngineering.net

Downloaded From : www.EasyEngineering.net

$$I_{1,2} = \frac{495 \pm \sqrt{204781}}{2}$$

$$I_{1,2} = \frac{495 \pm 452.53}{2}$$

$$I_1 = \frac{495 + 452.53}{2} = 473 \text{ amp (Practically not possible)}$$

$$I_2 = \frac{495 - 452.53}{2} = 21.24 \text{ amp}$$

So consider, armature current = 21.24 amp.

(*ii*) *Efficiency:*

Power input including excitation losses

$$= (440 \times 21.24 \times 0.9 + 750) = 9161.04$$

$$= 9161.04 \text{ W or } 9.16 \text{ kw}$$

Efficiency $\eta = \frac{\text{Output}}{\text{Input}} \times 100 = \frac{7500}{9161.04} = 81.86\%$. **Ans.**

Example 4: *A three phase star-connected, 1000 KVA, 11000 volt alternator has rated current of 50.0 A. The armature resistance of winding per phase is 0.50 Ω. The test results are given below :*

O.C. Test : Field Current = 12.5 A, Voltage between lines = 422 V

S.C. Test : Field Current = 12.5 A, Line Current = 5010 Amp.

Determine the full-load voltage regulation of the alternator for 0.8 p.f. lagging.

Solution :

The rating $= 1000 \text{ KVA}, 11000 \text{ V}, I = 50.0 \text{ Amp}, R_a = 0.50\ \Omega$

Since alternator is star connected, therefore

$$I_{Ph} = I_L = 50.0 \text{ Amp, O.C. line voltage} = 422 \text{ volt}$$

Then, synchronous impedance $Z_s = \frac{\text{O.C. Phase Voltage}}{\text{Rated Current Per Phase}}$

$$= \frac{\frac{422}{\sqrt{3}}}{50.0} = 4.87 \text{ ohm.}$$

Synchronous reactance $X_s = \sqrt{Z_s^2 - R_a^2}$

$$= \sqrt{(4.87)^2 - (0.50)^2} = 4.85\ \Omega$$

$$E_{Ph} = V = \frac{11000}{\sqrt{3}} = 6350.85 \text{ V} \approx 6351 \text{ volt}$$

(*i*) Voltage regulation at 0.8 p.f. lagging

$$\cos\phi = 0.8,\ \phi = 36.86 \text{ so, } \sin\phi = 0.6$$

Bahan dengan hak cipta
Downloaded From : www.EasyEngineering.net

Downloaded From : www.EasyEngineering.net

Therefore, $$E_0 = \sqrt{(V\cos\phi + I R_a)^2 + (V\sin\phi + I X_s)^2}$$

$$= \sqrt{(6351 \times 0.8 + 50 \times 0.5)^2 + (6351 \times 0.6 + 50 \times 4.85)^2}$$

$$= \sqrt{(5105.8)^2 + (4053.1)^2} = 6518.96 \text{ volt}$$

$$\therefore \text{ Percentage regulation } = \frac{E_0 - V}{V} \times 100$$

$$= \frac{6518.96 - 6351}{6351} \times 100 = 2.64\%. \quad \textbf{Ans.}$$

Example 5: *A three-phase star-connected alternator is delivering 20 MW and 8 MVAR to an infinite bus at 11 kV. The alternator has synchronous impedance of (0 + j5) Ω. Determine the load angle and the excitation e.m.f. of the alternator.*

Solution : Since $\overline{E_0} = \overline{V} + \overline{I}\,\overline{Z_s}$

Taking V as reference, $VI\cos\phi = 20$ MW

$$= 20 \times 10^6 \text{ M}$$

$$VI\sin\phi = 8 \text{ MVAR} = 8 \times 10^6 \text{ VAR}$$

$$\therefore \quad \tan\phi = \frac{8}{20} = 0.4 \quad \text{or} \quad \phi = \tan^{-1}(0.4)$$

$$\phi = 21.8°$$

Load current, $$I = \frac{20 \times 10^6}{\sqrt{3} \times 11000 \times \cos(21.8)} = 1130.6 \text{ amp.}$$

Excitation e.m.f of the alternator (per phase) is expressed as:

$$\overline{E_f} = \left(\frac{11 \times 1000}{\sqrt{3}} \angle 0°\right) + (1130.6 \angle -21.8°) \times 5 \angle 90°$$

$$6350.8 + 5653 \angle 68.2° = 6350.8 + 2099.3 + j5248.7$$

$$= 8450.1 + j5248.7$$

$$= 9947.51 \angle 31.84°$$

$$P = \frac{E_0 \cdot V}{X_s} \sin\delta$$

$$\sin\delta = \frac{P X_s}{E_0 V} = \frac{\frac{20}{3} \times 10^6 \times 5}{9947.51 \times 63508}$$

$$\sin\delta = 0.53$$

$$\delta = \sin^{-1}[0.53] = 31.84°$$

Load angle $$\delta = 31.84° \quad \textbf{Ans.}$$

Copyrighted material
Downloaded From : www.EasyEngineering.net

Downloaded From : www.EasyEngineering.net

EXERCISES

1. A 500 V, 33 KVA, three phase alternator, has an effective resistance of 0.3 Ω. A field current of 11 amp produces an armature current of 200 A on short circuit and an e.m.f of 400 volt on open circuit. Calculate the full load regulation at Pf 0.8 lagging.
2. A three-phase 11 KVA, 440 V, 50 Hz, star-connected alternate supplies the rated load at 0.8 P*f* lagging. If the armature resistance is 0.5 Ω and synchronous reactance is 8 Ω, find the power angle and voltage regulation.
3. A 500 V, three phase synchronous motor gives a net output mechanical power of 7.5 kW and operates at 0.8 p.f. lagging. Its effective resistance is 0.75 Ω. If the iron and friction losses are 500 W and excitation losses are 800 W, estimate the armature current. Calculate the efficiency.
4. A three phase, 50 Hz 600 KVA, 6000 V star-connected alternator has an effective resistance of 0.2 Ω. A field current of 10 A produces 480 V on open circuit and a field current of 5 A gives armature current of 105 amp. Calculate the voltage regulation of this alternator at 0.8 power factor lagging.
5. A three phase, 3.3 kV, star connected synchronous motor has a synchronous reactance of 5 Ω per phase. The input to the motor is 1000 kw at normal voltage and the induced line e.m.f is 4 kV. Calculate the line current, power factor, and mechanical power output. Take stray losses as 20 kW. Neglect the armature resistance.
6. Calculate the voltage induced per phase in a three phase, 50 Hz, alternator having a flux per pole of 0.1515 Wb. The number of conductors are 360. Assume full pitch coil with a distribution factor of 0.96.
7. A three-phase 10-pole star connected alternator runs at 720 rpm. It has 120 stator slots with 10 inductors per slot. If the flux per pole is 0.056 Wb, determine the phase and line induced e.m.f.
8. Derive an expression for the voltage induced in an alternator, phase consisting of a number of full pitch coils joined in series. Assume the air gap flux to have sinusoidal distribution.
9. Explain what is meant by the synchronous reactance of an alternator and voltage regulation.
10. Why a 3-phase synchronous motor does not have any self starting torque ? Also discuss with a suitable phasor diagram the behaviour of 3-phase synchronous motor at no load.
11. Explain the effect of change of load on the performance of three-phase synchronous motor.
12. In case of a 3-phase synchronous motor, explain how the power factor at which the motor operates can be controlled by varying the field excitation.

Copyrighted material
Downloaded From : www.EasyEngineering.net

Downloaded From : www.EasyEngineering.net

Experiments

1. Network Theorems

Experiment 1 (*a*) : To verify Thevenin's thesorem.

1. **Object :** To verify Thevenin's theorem.

2. **Apparatus Required :** Voltmeter (0 – 300 V), D.C. batteries, D.C. ammeter (0–3/6 Amp), rheostats, resistors, keys and connecting wires etc.

Apparatus Details

S.No.	*Name of Apparatus*	*Type*	*Range / Rating*	*Quantity*	*Make*	*Remarks*

3. **Theory/Principle :** According to the Thevenin's theorem, any linear network containing energy sources (generator) and resistances (impedances) can be replaced by an equivalent circuit consisting of a voltage source V_{th} in series with R_{th}. The value of 'V_{th}' is the open circuit voltage between the terminals of the network and 'R_{th} is the impedance measured between the terminals with all energy sources replaced by their internal impedances (Voltage source treated as short circuit while current source treated as open circuit).

Current across the Load Resistance (R_L) is given by the equation

$$I_L = \frac{V_{th}}{R_{th} + R_L}$$

Where V_{th} = Open circuit voltage across the terminal
R_{th} = Equivalent resistance across the terminal
R_L = Load Resistance

4. **Circuit Diagram :** The circuit diagram and the Thevenin's equivalent circuit is shown .

5. **Procedure :** Method for finding Thevenin's equivalent circuit.

1. Remove the resistance (called Load resistance R_L), whose current is required.

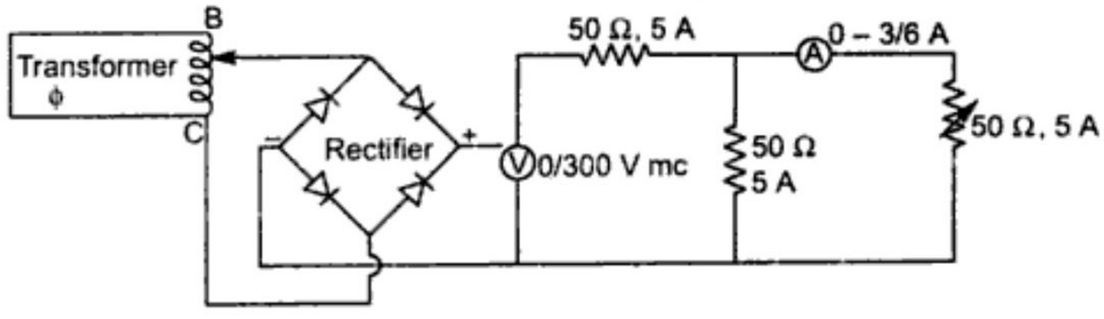

Fig. 1

Copyrighted material
Downloaded From : www.EasyEngineering.net

Downloaded From : www.EasyEngineering.net

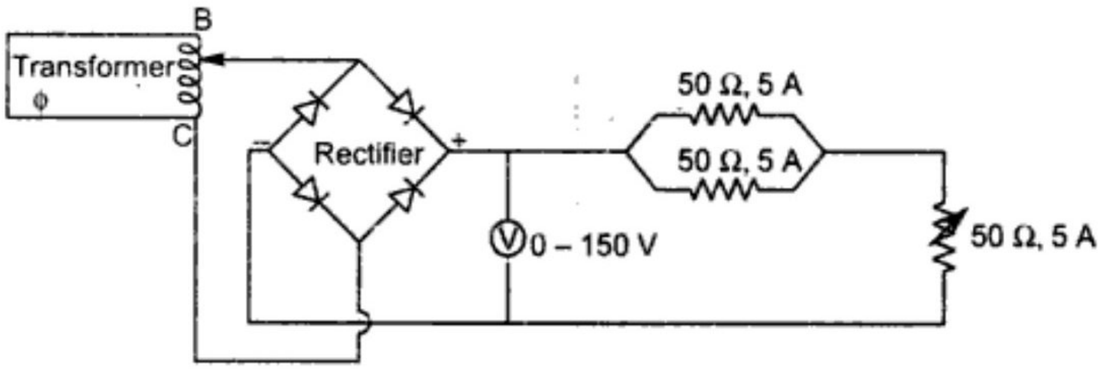

Fig. 2

2. Find the open circuit voltage V_{OC} which appears across the two terminals from where resistance is removed. It is also called Thevenin's voltage V_{th}.
3. Compute the resistance of the whole network as looked into from these two terminals after all sources of e.m.f. are treated as short circuited while all the current sources are treated as open circuited.
4. Connect R_L back to its terminals from where previously it was removed.
5. Finally, calculate the current flowing through R_L using the equation

$$I_L = \frac{V_{th}}{R_{th} + R_L} \quad \text{or} \quad I_L = \frac{V_{OC}}{R_{th} + R_L}$$ and compare with meter readings.

6. **Observation Table**

S.No.	*Load current in amperes* (I_L)	*Voltage across load in volts* (V_L)	*Load resistance in ohms* $R_L = \frac{V_L}{I_L}$	*Open circuit Voltage across terminals A and B* (V_{OC} or V_{th})	*Equivalent resistance across the terminals A and B,* R_{th}	*Load current by* $I_L = \frac{V_{th}}{R_{th} + R_L}$
1.						
2.						
3.						
.						
.						
.						
10.						

7. **Calculation :** The load current

$$I_L = \frac{V_{Th}}{R_{Th} + R_L}$$

$$I_L = \text{..... amp.}$$

8. **Result**

1. The value of open circuit voltage (V_{OC}) is ..... volts.
2. The value of Thevenin's resistance is ..... ohms.
3. The value of current across load is ..... amps.

Material com direitos autorais
Downloaded From : www.EasyEngineering.net

Downloaded From : www.EasyEngineering.net

3. The value of Norton's resistance is ..... ohms.
4. The value of load current is ..... amps.

It will found that measured value of current flowing through the load I_L are the same as determined by Norton's theorem.

9. **Precautions**

1. All connections should be tight.
2. Reading and calculations should be taken carefully.
3. Never touch the live terminals.

Experiment 1 (*c*) : To verify the maximum power transfer theorem.

1. **Object :** To verify the maximum power transfer theorem.
2. **Apparatus Required:** Accumulator, D.C. Voltmeter (0–15V), D.C. ammeter (0–2.5 Amp.), Resistance box, Rheostat of suitable rating and connecting wires.

Apparatus details

S.No.	*Name of Apparatus*	*Type*	*Range / Rating*	*Quantity*	*Make*	*Remarks*

3. Theory/Principle: According to the maximum power transfer theorm as applied to D.C. network, a resistive load will abstract maximum power from a network when the load resistance is equal to the resistance of the network as viewed from the output terminals, with all energy sources replaced by their internal resistance. In the case of A.C. network load impedance should be complex conjugate of source impedance.

4. Circuit Diagram: The circuit diagram and graph power and load resistance is shown below in the Fig. 4.

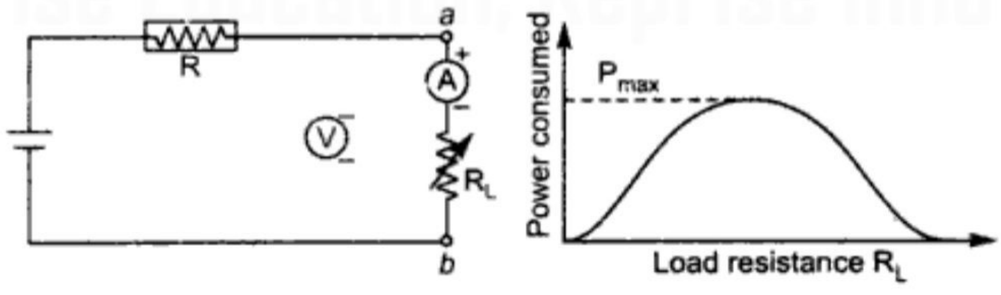

Fig. 4

5. Procedure

1. Connection diagram is shown above in Fig. 4, where R is fixed at some suitable value, load resistance R_L is kept maximum and ammeter and voltmeter readings are noted. Load resistances R_L is reduced to a very low value in steps and each time ammeter and voltmeter readings are noted.
2. This process is repeated for different values of R.

Material com direitos autorais
Downloaded From : www.EasyEngineering.net

Downloaded From : www.EasyEngineering.net

3. For every value of R, curve is plotted between power consumed in the load resistance and load resistance R_L and from the curve so drawn the value of R_L for maximum power drawn is determined.

6. Observation Table

S.No.	Resistance R in ohms	Current in amperes (I_L)	Voltage V in volts	Power consumed $P = V_L I_L$ watts	Load resistance $R_L = V_L I_L$ Ohms

7. Calculations

1. The value of current in load resistance is ..... ohms.
2. The value of voltage in load resistance is ..... volt.
3. The value of power consumed as ..... watts.
4. The value of load resistance is ..... ohms.

8. Result : It will found that power consumed ($V_L I_L$) will be maximum when R_L becomes equal to R. This verifies the maximum power transfer theorem.

9. Precautions:

1. All connections should be tight.
2. Reading should be taken carefully for accurate result.
3. Do not touch the live terminals because touching the live terminals is injurious to health.

Material com direitos autorais
Downloaded From : www.EasyEngineering.net

Downloaded From : www.EasyEngineering.net

2. Power Measurement

Experiment: Study of power measurement.

1. Object : To study the power measurement in a three phase A.C. circuit by two wattmeter method and to determine the power factor of the time.

2. Apparatus Required : Dynamometer type wattmeters, Tripple pole iron clad switch (TPIC), 3-phase balanced load, Moving iron voltmeter, Moving iron ammeter, Connecting wires etc.

Apparatus Details

S.No.	*Name of Apparatus*	*Type*	*Range / Rating*	*Quantity*	*Make*	*Remarks*
1.						
2.						
3.						

3. Theory/Principle : The load wattmeters W_1 and W_2, ammeter A and voltmeter V are connected to the 3-phase A.C. supply through a TPIC, the readings of wattmeters W_1 and W_2, ammeter A and voltmeter V are noted with different loads. If anyone of the wattmeters gives down scale reading (*i.e.*, when the load factor is below 0.5), the supply is switched off and the connections of current coil (CC) or potential coil (PC) are reserved and the reading is considered as negative.

If two wattmeters W_1 and W_2 are connected as per circuit diagram shown, the power consumption P_1 and P_2 are calculated as :

If current taken by wattmeter W_1 is I_R.

And potential difference across pressure circuit of W_1 is

$$E_{RB} = E_R - E_B \text{ (vector difference)}$$

Power read of wattmeter $W_1 \Rightarrow P_1$ (say) $= I_R (E_R - E_B)$

Similarly power read by wattmeter $W_2 \Rightarrow P_2$ (say) $= I_Y (E_Y - E_B)$

Hence power read by wattmeters W_1 and W_2 is given by

$$P_1 + P_2 = I_R (E_R - E_B) + I_Y (E_Y - E_B)$$

$$P_1 + P_2 = I_R E_R + I_Y E_Y - (I_R + I_Y) E_B \quad \text{... } (a)$$

Also we know that

$$I_R + I_Y + I_B = 0$$

$$I_R + I_Y = -I_B$$

Put the value in equation (*a*), we get

$$P_1 + P_2 = I_R E_R + I_Y E_Y + I_B E_B$$

Material com direitos autorais
Downloaded From : www.EasyEngineering.net

Downloaded From : www.EasyEngineering.net

$$P_1 + P_2 = P$$

Total power $\quad P = P_1 + P = \sqrt{3}\ V_1 I_L \cos\phi$

Power factor $\quad (\cos\phi) = \dfrac{P}{\sqrt{3}\ V_L \cdot I_L}$

4. Circuit Diagram

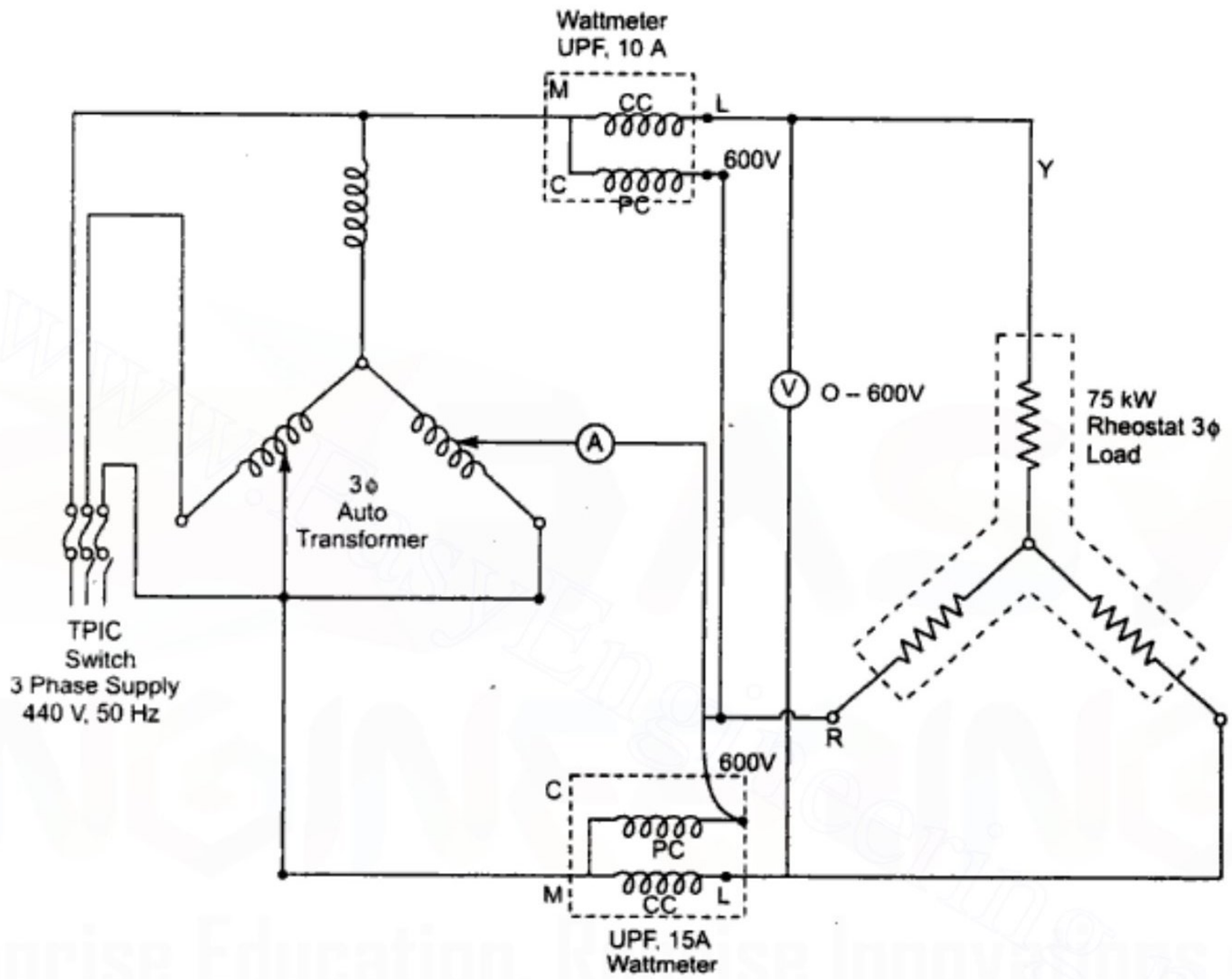

5. Procedure

1. Connect the circuit as per circuit diagram.
2. Vary the inductive load.
3. Note down all the reading carefully.
4. If one wattmeter reads negative or gives reverse reading, the reading of the wattmeter is taken by reversing the current coil terminal.

6. Observation Table

S.No.	*Voltage V_L (in volts)*	*Current I_L (in amp.)*	*Power P_1 (watt)*	*Power P_2 (watt)*	*Total power P*	*Power factor cos ϕ*
1.						
2.						
3.						
4.						

Material com direitos autorais
Downloaded From : www.EasyEngineering.net

Downloaded From : www.EasyEngineering.net

7. Calculation: Total power

$$P = P_1 + P_2$$

or $$P = \ldots\ldots \text{ watt}$$

Power factor $$(\cos \phi) = \frac{P}{\sqrt{3}\, V_L \,.\, I_L}$$

or $$\cos \varphi = \ldots\ldots\ldots\ldots$$

Result : Net power consumption (P) = ... watt

Power factor $(\cos \phi) = \ldots\ldots$

9. Precautions

1. All connections should be tight.
2. All apparatus should be of suitable range and ratings.
3. Reading should be taken accurately.
4. Never touch the live terminals and wires.
5. Before reversing the connection of CC or PC, switch off the supply.

Материал, защищенный авторским правом
Downloaded From : www.EasyEngineering.net

Downloaded From : www.EasyEngineering.net

3. Load Test of Transformer

Experiment: Direct load test on 1-ϕ transformer.

1. **Object :** Measurement of efficiency of a single phase transformer by load test.

2. **Apparatus required :** A.C. ammeters, A.C. voltmeters, Wattmeters, Single phase transformer, Lamp load in series with an inductor DPIC switch, connecting wires.

Apparatus Details

S.No.	*Name of Apparatus*	*Type*	*Range/Rating*	*Quantity*	*Make*	*Remarks*
1.						
2.						
3.						

3. **Theory/Principle :** The efficiency of a transformer is given by the expression

$$\eta = \frac{\text{Output power}}{\text{Input power}} \times 100$$

or

$$\eta = \frac{P_2}{P_1} \times 100$$

The method of determination of transformer efficiency by direct measurement of output and input does not give accurate result, as the power losses are quite low (or the order of 1-4%). The difference between the reading of output and output instruments is then so small that an instrument error as low as 0.5% would cause an error of the order of 15–20% in the power losses. There is a wastage of large amount of power and no information is available from such a test about the proportion of copper and iron losses.

4. **Circuit Diagram**

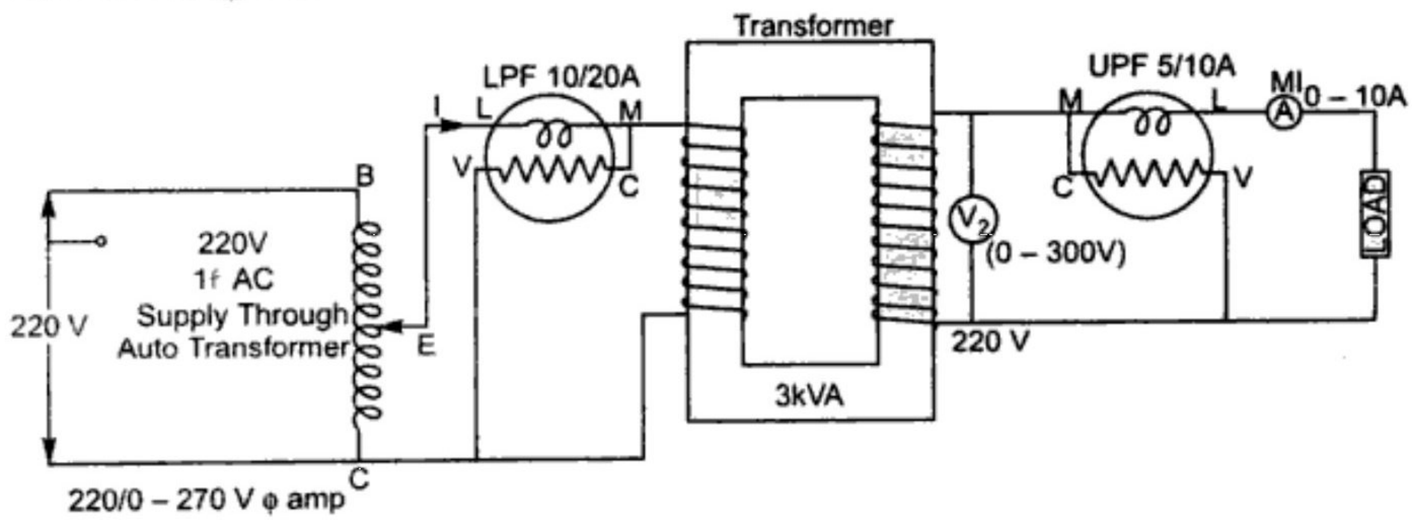

Fig. 1 (a) *Circuit diagram*

Материал, защищенный авторским правом
Downloaded From : www.EasyEngineering.net

Downloaded From : www.EasyEngineering.net

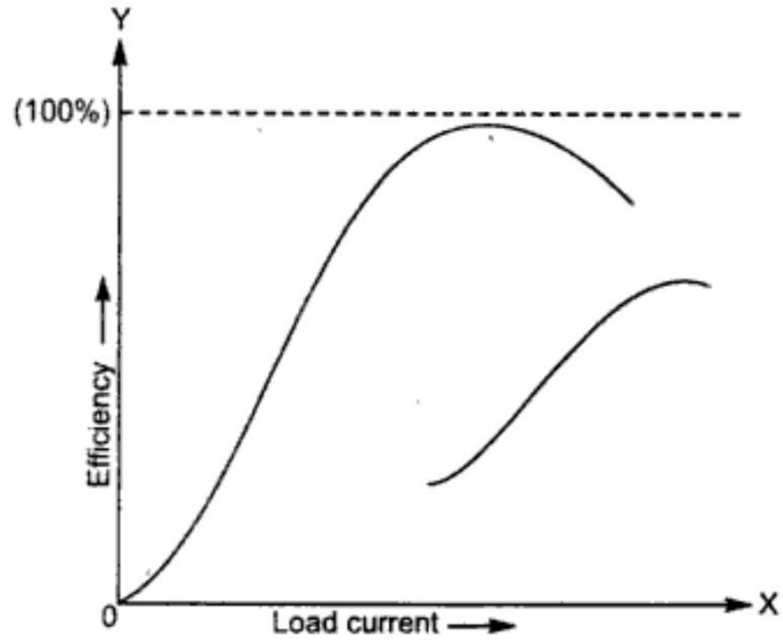

Fig. 1 (*b*) *Efficiency curve*

5. Theory/Principle

1. Make the connection according to the circuit diagram as shown above in figure.
2. Connect the wattmeters, ammeters and voltmeters both in primary as well as in secondary winding and connect a load across the output of the winding under test according to the circuit diagram.
3. The supply is switched on to the circuit through DPIC switch.
4. The readings of voltmeters, ammeters and wattmeters, on input (primary) and output (secondary) are noted for different loads and repeat these readings at least three time and then take their mean.

6. Observation Table :

S.No.	*Input side*				*Output side*				$\eta = \frac{P_2}{P_1} \times 100$
	V_1 *in volts*	I_1 *in amps.*	P_1 *in watts*	P_F P_1/V_1I_1	V_2 *in volts*	I_2 *in amps.*	P_2 *in watts*	P_F P_1/V_1I_1	
1.									
2.									
3.									
4.									
5.									
6.									

7. Calculations

Power input (primary) side, $P_1 = V_1I_1 = ...$ watts.

Power factor in input (primary) side, $\cos \phi_1 = \frac{P_1}{V_1I_1} = ...$.

Материал, защищенный авторским правом
Downloaded From : www.EasyEngineering.net

Downloaded From : www.EasyEngineering.net

4. O.C./S.C. Test of Transformer

Experiment: Study of the single phase transformer's circuit parameters.

1. **Object:** Determination of circuit parameters and losses in a single-phase transformer by open circuit and short circuit test and obtain the following :

(*a*) Voltage regulation in percentage.

(*b*) Equivalent circuit diagram (using circuit parameters).

2. **Apparatus Required:** Single phase transformer, Auto transformer (for variable supply). Voltmeters, Ammeters, Wattmeters, Screw driver, Combination plier, connecting wires etc.

Apparatus Details

S.No.	*Name of Apparatus*	*Type*	*Range / Rating*	*Quantity*	*Make*	*Remarks*

3. **Theory / Principle:** Transformer is a high efficiency, static machine. It transfers the power from one circuit to other circuit at same frequency. The efficiency of small rating transformers can be found by direct loading method, but in the case of large rating transformers, it can not. Because it is impossible to full load the large transformers in laboratory and it is also costly. So we perform the open circuit and short circuit tests on a transformer to measure its losses by which we can calculate efficiency and voltage regulation of the transformer. The main losses occurs in a transformer are as follows :

(A) No Load Losses: These are also known as iron or core losses in a transformer and these losses consists the following :

(*i*) Eddy-current losses

(*ii*) Hysteresis losses.

(B) Full Load Losses: These losses are also known as copper losses and occurs due to the resistance of winding.

Open circuit test: This test perform to find out the no load losses (iron losses) and no load current. Since, at the no-load condition or open circuited secondary condition, load current in primary is very less, so copper losses can be neglected.

In this test, primary winding (generally L.V. side) energised with rated voltage and secondary winding (H.V. side) is open circuited. The connected apparatuses, *i.e.*, voltmeter, ammeter and wattmeters, in primary side measures, voltage across primary terminals, no-load current and no-load losses respectively.

Материал, защищенный авторским правом
Downloaded From : www.EasyEngineering.net

Downloaded From : www.EasyEngineering.net

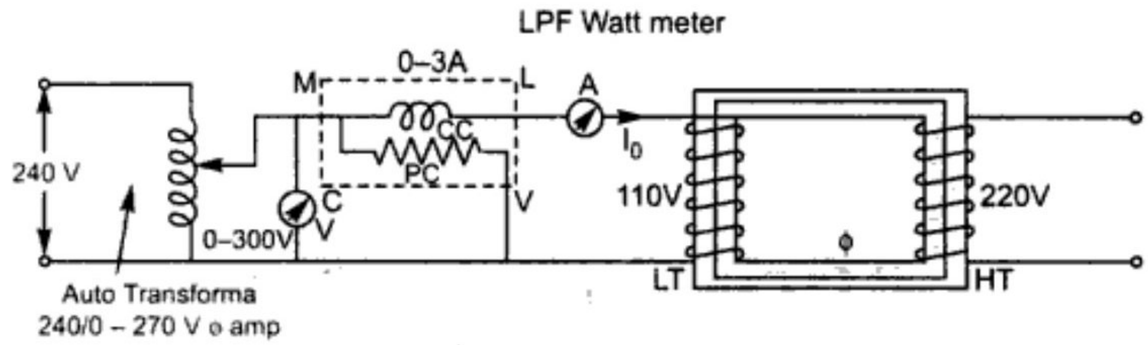

Open circuit test

Short circuit test : The main purpose of this test is to find out the copper losses. This test is performed, keeping L.V. winding short circuited with a wire or ammeter and energised H.V. side with its full load current. Since, this full load current is started flowing at the low voltage (generally 5 to 10% of rated voltage), so less magnetic flux produced; due to this reason core losses or iron losses can be neglected. The apparatus, *i.e.*, ammeter, voltmeter and wattmeter, connected in H.V. side, measures the full load current, short circuit voltage and full load copper losses respectively.

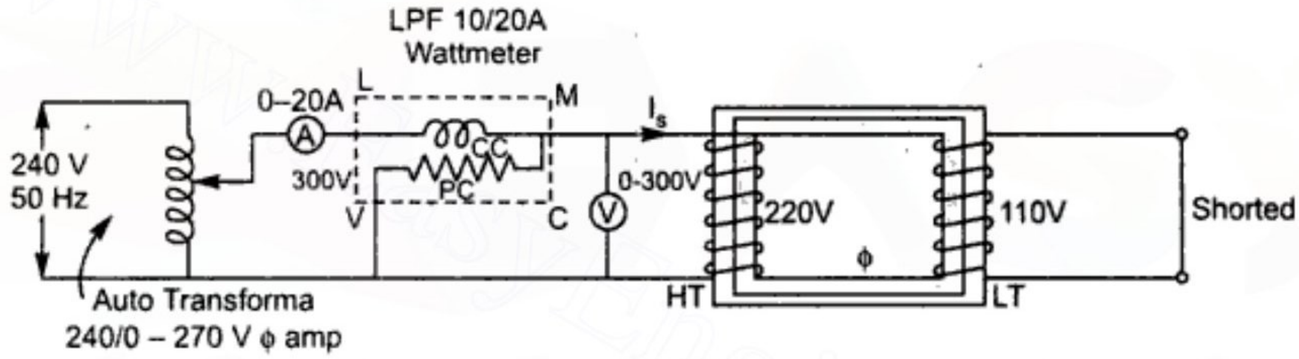

Short circuit test

Equivalent Circuit of Transformer

(*a*) Under no load condition:

Let rated applied voltage in input = V_1

Current flowing in L.V. side = I_0

No load losses = P_0

Conductance $Y_0 = I_0/V_1$ mho

$$(V_1)^2 g_1 = P_0$$

$$\therefore \quad g_1 = P_0/(V_1)^2 \text{ mho}$$

and $$b_m = \sqrt{\left(Y_0^2 - g_1^2\right)} \text{ mho}$$

where $Y_0 \rightarrow$ Admittance $= \dfrac{1}{Z_0}$

$g_1 \rightarrow$ Conductance $= \dfrac{1}{R_1}$

$b_m \rightarrow$ Conductance $= \dfrac{1}{X_L}$

(*b*) Under short circuit condition:

Let short circuit current $= I_{SC}$

Материал, защищенный авторским правом
Downloaded From : www.EasyEngineering.net

Downloaded From : www.EasyEngineering.net

Applied voltage in input $= V_{SC}$

Short circuit losses $= P_{SC}$ = Full load Cu-losses

Since, $(I_{SC})^2 R = P_{SC}$

$\therefore$ $R = P_{SC}/(I_{SC})^2$

and $Z = V_{SC}/I_{SC}$

$\therefore$ $X = \sqrt{Z^2 - R^2}$

Voltage regulation: Voltage regulation can be defined as the ratio of voltage drop, between input and output ends to the input or no-load voltage. So,

$$\text{Voltage regulation} = \frac{\text{Voltage drop}}{\text{no-load voltage}}$$

$$\text{or, Percent voltage regulation } (\%R_U) = \frac{\text{Voltage drop}}{\text{no-load voltage}} \times 100$$

where, in case of transformer,

$$\text{Voltage drop} = I_{SC}\,(R\cos\phi \pm X\sin\phi)$$

Note : Here, +ve sign shows lagging power factor when –ve sign shows leading power factor.

4. Circuit diagram

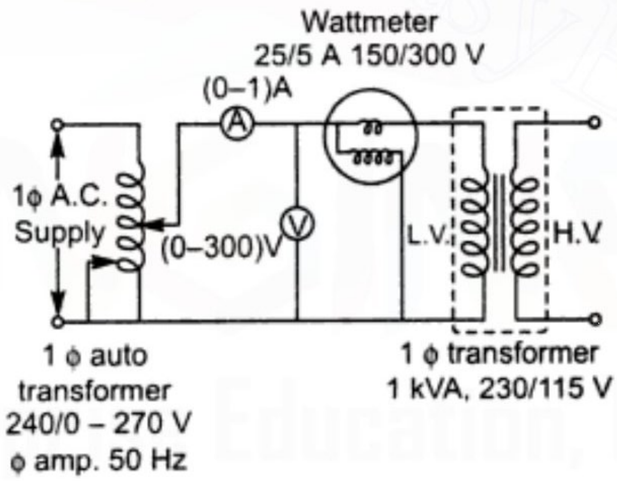

Fig. 3(a) *Open circuit test*

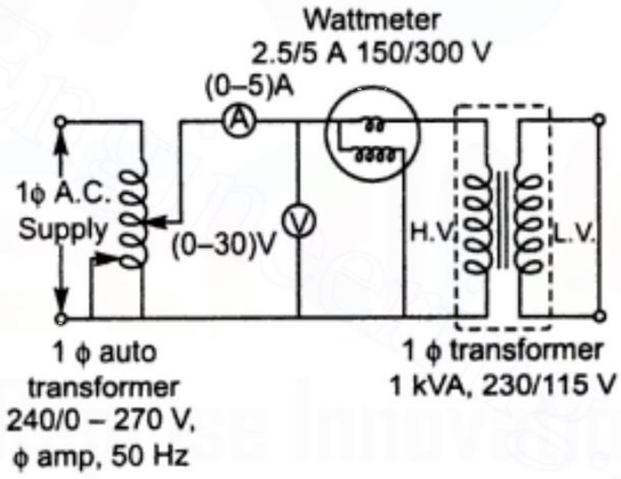

Fig. 3(b) *Short circuit test*

5. Procedure

(*a*) Open circuit test :

1. Connect all the apparatus as the circuit diagram shown in Fig. 3(*a*)
2. ON the switch of power supply and adjust rated voltage across L.V. side
3. Record no-load current, voltage applied and no-load power of the transformer winding in observation table.
4. Switch OFF the supply after recording the readings.

(*b*) Short circuit test :

1. Connect all the apparatus and instruments according to circuit diagram shown in Fig. 3(*a*)
2. Adjust the variac at zero.
3. On the switch of power a.c. supply.

Material com direitos autorais
Downloaded From : www.EasyEngineering.net

Downloaded From : www.EasyEngineering.net

4. Increase the applied voltage slowly, till the full load current in corresponding winding.
5. Note down the ammeter, voltmeter and wattmeter reading in the observation table.
6. Switch off the supply after taking the readings

   cos ϕ of transformer = 0.8 (lag).

6. Observation Table :

S. No.	*Open circuit test*			*Short circuit test*		
	Input voltage (V_1) volt	*No-load current (I_0) amp.*	*Iron losses (W_0) watts or P_0*	*Short circuit voltage (V_{SC}) volts*	*Full load current (I_{SC}) amp.*	*Cu-losses (W_{SC}) watts. or P_{SC}*

7. Calculation

Admittance $$Y_0 = \frac{I_0}{V_1} = \text{..... mho}$$

Conductance $$g_1 = \frac{P_0}{V_1} = \text{..... mho}$$

Susceptance $$b_m = \sqrt{Y_0^2 - g_1^2} = \text{..... mho}$$

and $$R = \frac{P_{SC}}{(I_{SC})^2} = \text{..... ohm}$$

$$Z = \frac{V_{SC}}{I_{SC}} = \text{..... ohm}$$

$$X = \sqrt{Z^2 - R^2} = \text{..... ohm}$$

Voltage drop $$= I_{SC}(R\cos\phi + X\sin\phi)$$

$$\%\text{ voltage regulation } (\%\,R_V) = \frac{\text{Voltage drop}}{\text{Input voltage}} \times 100$$

8. Result: Voltage regulation (R_V) of transformer = ... %

9. Precautions:

1. All connections should be tight.
2. All instruments and apparatus should be suitable range and ratings.
3. Don't touch any bare conductor or terminal without off the main switch.
4. Reading should be taken carefully.
5. Never start the experiment without inspection of lab incharge.
6. Voltage should be increased gradually under short circuit test.

Материал, защищенный авторским правом
Downloaded From : www.EasyEngineering.net

Downloaded From : www.EasyEngineering.net

6. Observation Table

S.No.	*D.C. Shunt generator*		*D.C. Series generator*	
	Load current I_L *amp.*	*Terminal voltage* V_T *volt*	*Load current* I_L *amp*	*Terminal voltage* V_T*-volt*
1.				
2.				
3.				
.				
.				
.				
10.				

Note : Plot the curves upon graph papers for above readings.

7. Result: The characteristics of D.C. shunt generator and D.C. series generator are found as observed in observation table and corresponding graph.

8. Precautions:

1. All connections should be tight.
2. Readings should be taken carefully.
3. Readings should be taken, increasing the load current.

Материал, защищенный авторским правом
Downloaded From : www.EasyEngineering.net

Downloaded From : www.EasyEngineering.net

6. D.C. Shunt Motor

Experiment: Speed control of D.C. shunt motor.

1. Object: To study the speed control of a D.C. shunt motor and to draw the speed variation w.r.t change of : (*a*) field current, (*b*) armature current.

2. Apparatus Required: D.C. shunt motor, Ammeters, Voltmeters, Rheostats, DPIC switch and 3-point starter, Techometer, connecting leads etc.

Apparatus Details

S.No.	*Name of Apparatus*	*Type*	*Range/Rating*	*Quant1ity*	*Make*	*Remarks*
1. 2. 3.						

3. **Theory/Principle :** We know that, in D.C. shunt motors, the back e.m.f. is given by

$$I_b = V - I_a R_a = \frac{Z\phi PN}{60A}$$

or

$$N = \frac{(V - I_a R_a)}{Z\phi PN} \times 60A \qquad \text{... (1)}$$

Hence,

$$N \propto \frac{1}{\phi} \text{ and } N \propto \frac{1}{R_a} \qquad (\because \text{ N is speed in r.p.m.})$$

where ϕ is flux and R_a is armature resistance.

(*a*) Field Control Method: This method is applied, where we have to obtain the speed greater than normal rated speed. If we insert a resistance in field winding, field current becomes less, consequently flux also becomes less and speed increased by the equation (1).

(*b*) Armature Control Method: If we need the speed less than rated speed, we use this method. If we insert a resistance in the series of armature, $I_a R_a$ will increase, therefore the speed of shunt motor reduces by the equation (1).

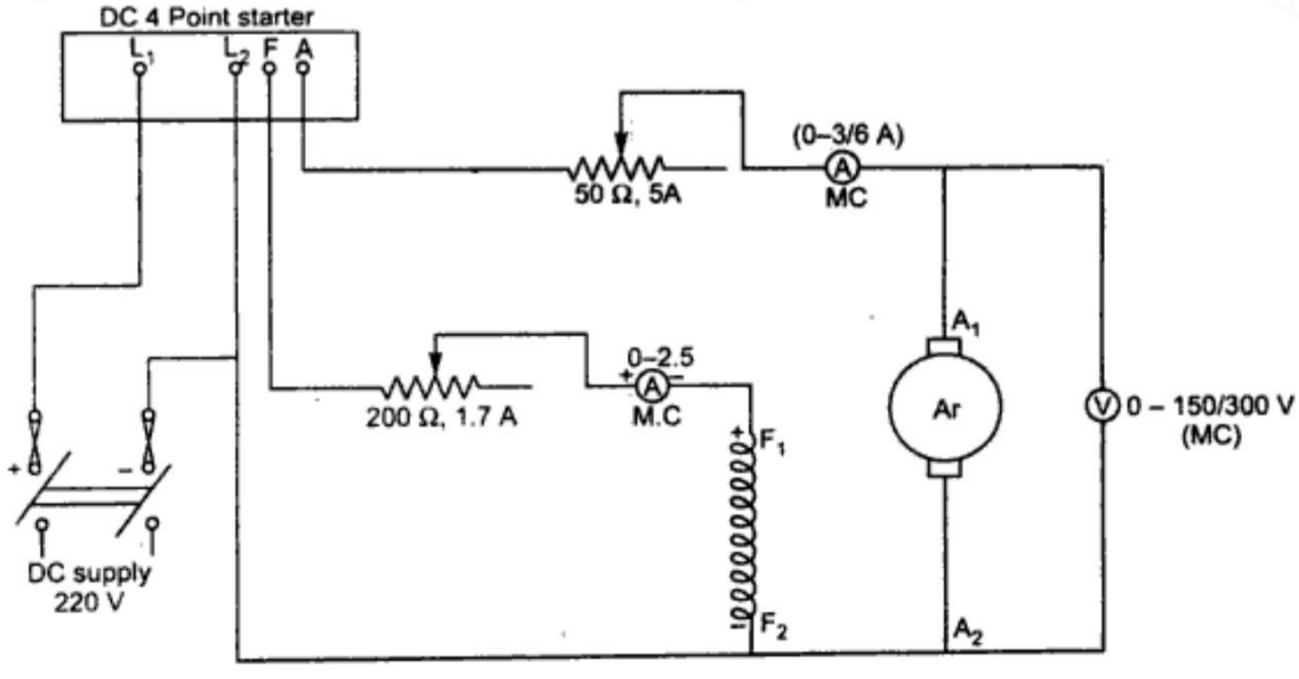

Fig. 1 *D.C. Shunt Motor*

Материал, защищенный авторским правом
Downloaded From : www.EasyEngineering.net

Downloaded From : www.EasyEngineering.net

4. Procedure

(*a*) Field Control Method:

1. Make a proper connection according to circuit diagram.
2. Switch on the supply and start the motor with the help of starter.
3. Now, insert the resistance in field winding slowly.
4. Tabulate the readings of field current, voltmeter and speed by techometer in observation table.
5. Take some readings varying the field resistance and plot a graph between I_f and N on graph motor.

Материал, защищенный авторским правом
Downloaded From : www.EasyEngineering.net

Downloaded From : www.EasyEngineering.net

slowly-slowly. Normally the 60% taping on the auto-transformer can be used for safe starting current when the induction motor has picked up speed, the full rated voltage is applied by the change over switch.

4. Circuit diagram:

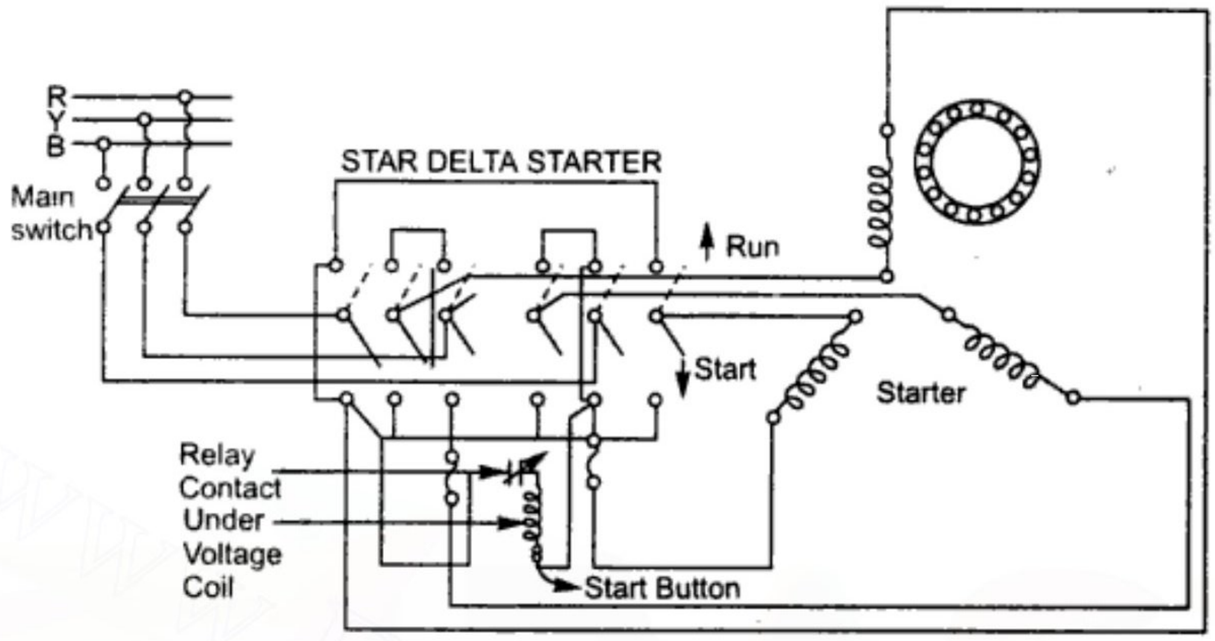

Fig. 1

5. Procedure

1. Connect the circuit according to the circuit diagram as shown in Fig. 1.
2. First, put the starter as 'start' position, when it gained approximate 80 to 90% of the rated speed, throw it to 'run' position.
3. Note the starting current and speed of motor.
4. Load the machine by tightening the belt, till its rated current start flowing. Note down the load current and speed of the motor.
5. Interchange the connection of any two phases and repeat the above procedure.

6. Observatin table

S.No.	*Forward direction*				*Reverse direction*			
	No-load		*On-load*		*No-load*		*On-load*	
	Current (a.m.p.)	*Speed (r.p.m.)*	*Current (a.m.p.)*	*Speed (r.p.m.)*	*Current (a.m.p.)*	*Speed (r.p.m.)*	*Current (a.m.p.)*	*Speed (r.p.m.)*
1.								
2.								
3.								
4.								
5.								

7. Result: When motor run in both reverse and forward direction following comparitive statement will be obtained.

Материал, защищенный авторским правом
Downloaded From : www.EasyEngineering.net

Downloaded From : www.EasyEngineering.net

8. Calibration of Energy Meter

Experiment: Study and calibration of 1-phase energy meter.

1. **Object :** To study the construction and principle of 1-phase induction type energy meter.
2. **Apparatus Required :** DPIC switch, Single phase energy meter, Lamp load and connecting loads wattmeter.

Apparatus Details

S.No.	*Name of Apparatus*	*Type*	*Range/Rating*	*Quantity*	*Make*	*Remarks*

3. Theory/Principle: Induction type energy meters are the most common form of a.c. KWh meters used everyday in domestic and industrial installations. These meters measure electrical energy in kilo-watt hours. The principle of these meter is practically the same as that of the induction wattmeters. Constructionally, the two are similar except that the control spring and pointer of the wattmeter are replaced in the case of watt hour meter, by a break magnet and by a spindle of the meter.

The induction type energy meter consists of laminated electromagnets one of them excited by the current and the other by current proportional to the voltage across the load. The pressure coil is made highly inductive so that the current lag behind the voltage by 90°. A thin Aluminium disc is mounted so as to cut the flux from both the magnets and it is free to rotate.

In all induction instruments we have two fluxes produced by current flowing in the winding of instrument. These fluxes are alternating in nature and so they produce e.m.f. in a metalic disc. Consequently currents, therefore two torque are produced. Total torque is the sum of two torque.

There are four parts of the operting mechanism.

1. Driving system
2. Moving system
3. Braking system
4. Registering system

At constant angular speed the power $P = VI \cos f$ is proportional to the angular sped in r.p.s.

If N_t = Total number of revolution per KWh of meter under test.

W = Wattmeter reading at particular load.

t = Time in second for 'n' revolution of meter under test.

Reading of meter = $W \times t$ watt-sec

$$\% \text{ error} = \frac{\text{Meter constant} - \text{Practical reading}}{\text{Meter constant}} \times 100$$

เนื้อหาคุ้มครองลิขสิทธิ์
Downloaded From : www.EasyEngineering.net

Downloaded From : www.EasyEngineering.net

4. Circuit Diagram

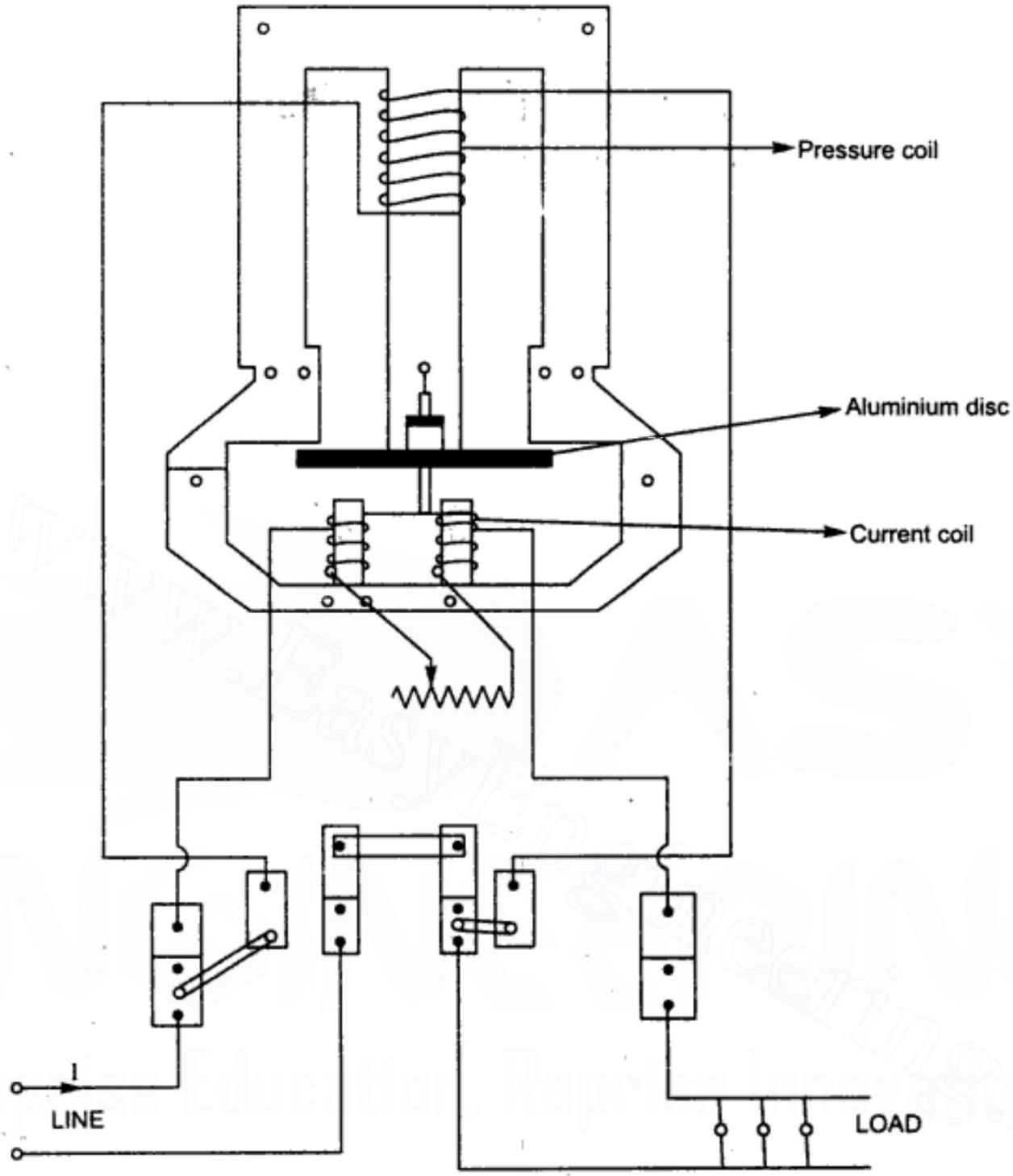

5. Procedure

1. Connect the circuit according to circuit diagram.
2. Apply the rated voltage by auto-transformer at no-load.
3. The current coil of the energy meter is connected in series with load, while the pressure coil across the supply.
4. Connect the variable resistor or lamp load between phase and neutral. Note the reading of all meters of their corresponding readings.
5. Note down the time for particular revolution of the disc and reading of the energy meter.

เนื้อหาคุ้มครองลิขสิทธิ์
Downloaded From : www.EasyEngineering.net

Downloaded From : www.EasyEngineering.net

6. Observation table

S.No.	*Voltage (in volt)*	*Current (in amp.)*	*Power (P) watts*	*No of rev. (r.p.s.)*	*Energy (Et) Kwh*	*Energy (E8) Kwh*	*% error*

7. Calculation

$$\% \text{ error} = \frac{E_s - E_t}{E_s} \times 100$$

8. Result: % error = ... %

9. Precautions:

1. All connections should be tight.
2. Never touch the live terminals during the experiment.
3. Before, read the energy meter, it should be connected to the load for minimum 15 minutes, that's why the friction error and temperature error can be removed.
4. Observe the readings carefully.
5. To find out the more accurate error, take some readings and find the mean of error.

ENGINEERING
Apprise Education, Reprise Innovations
EasyEngineering.net
เนื้อหาคุ้มครองลิขสิทธิ์
Downloaded From : www.EasyEngineering.net