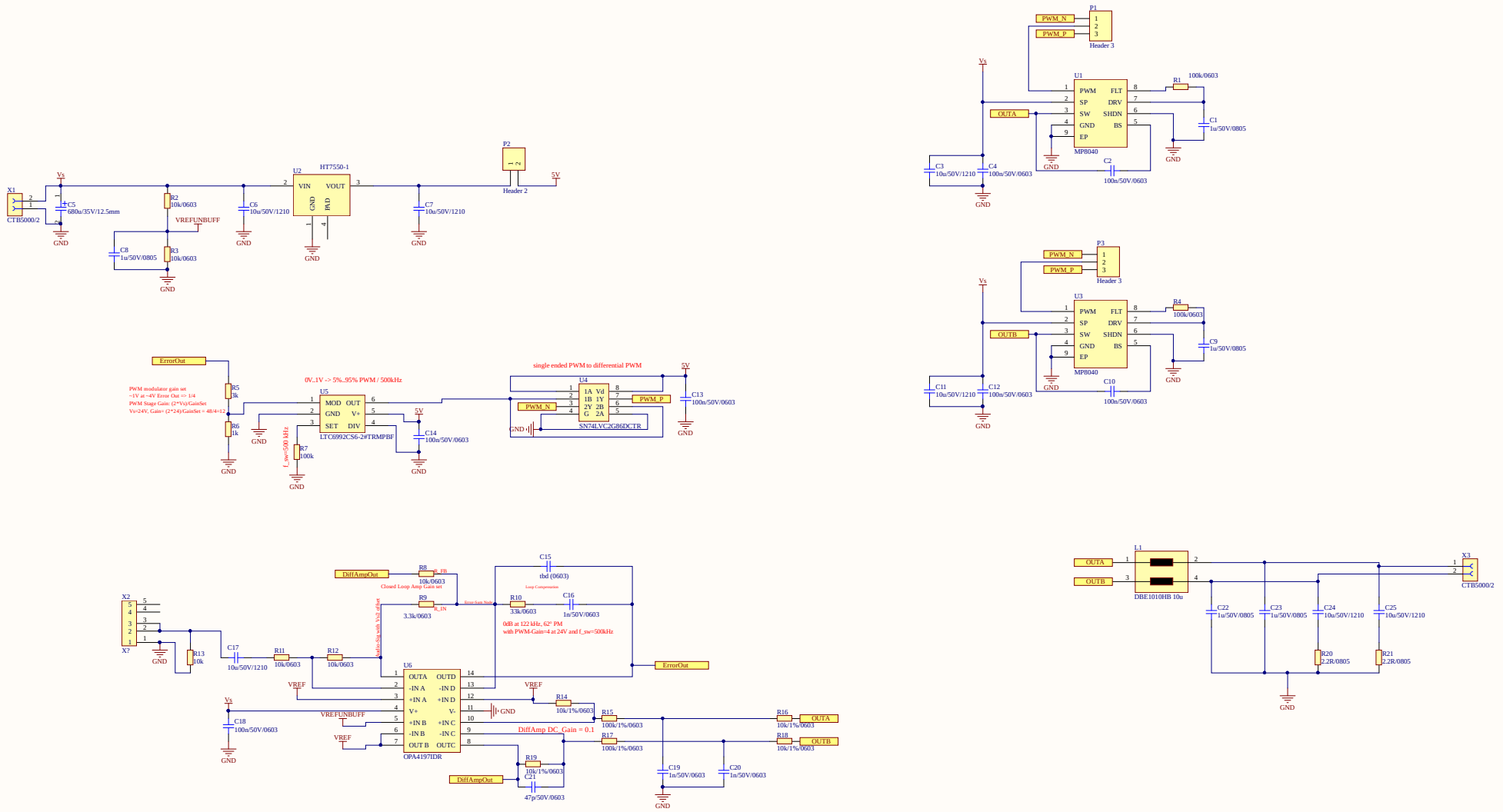

Title		
Size A2	Number	Revision
Date: 17.03.2020	Sheet	of
File: C:\Users\..\Sheet1.SchDoc	Drawn By:	