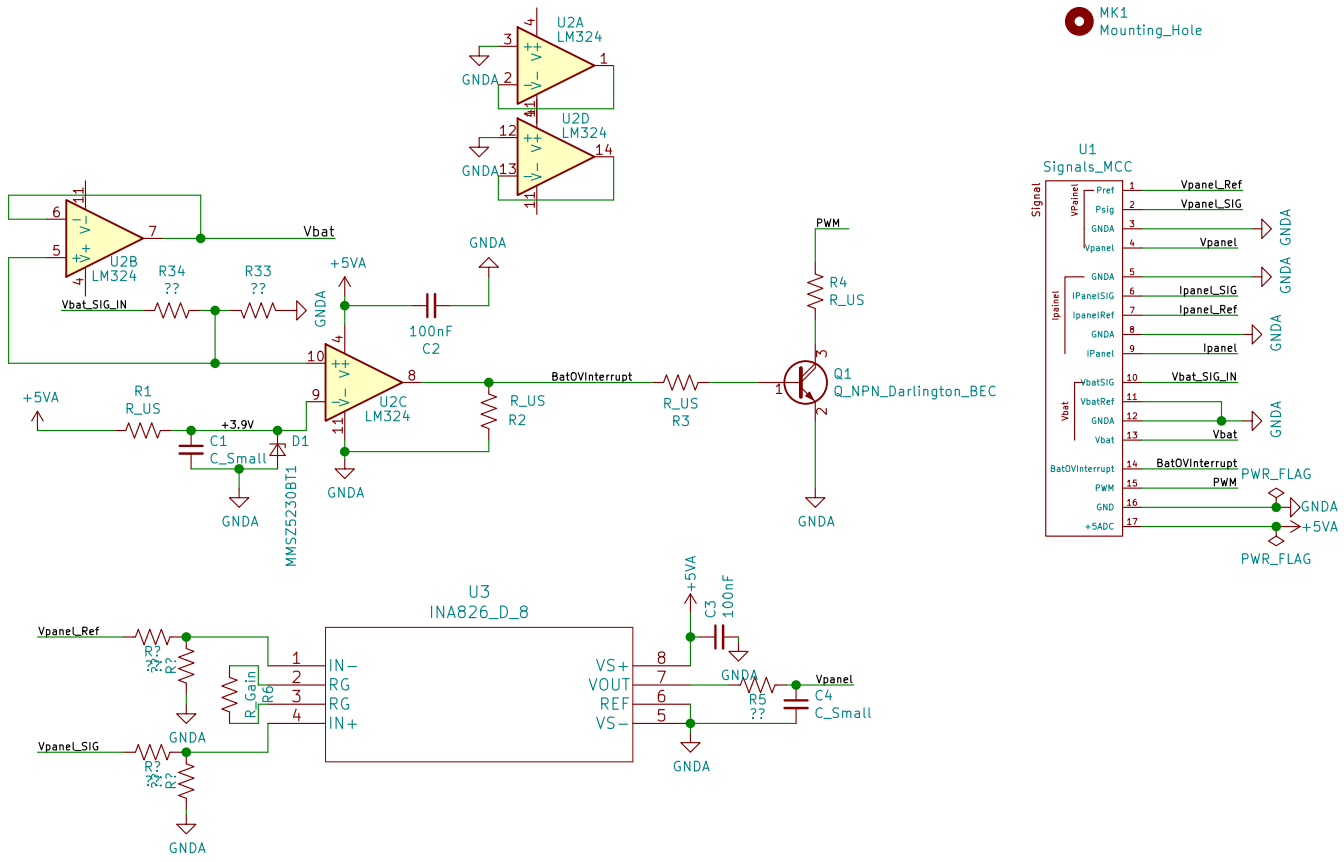

Sheet: /
File: Signal.sch

Title:

Size: A4	Date:	Rev:
KiCad E.D.A. kicad (5.0.0-rc2-dev-586-g888c43477)		Id: 1/1