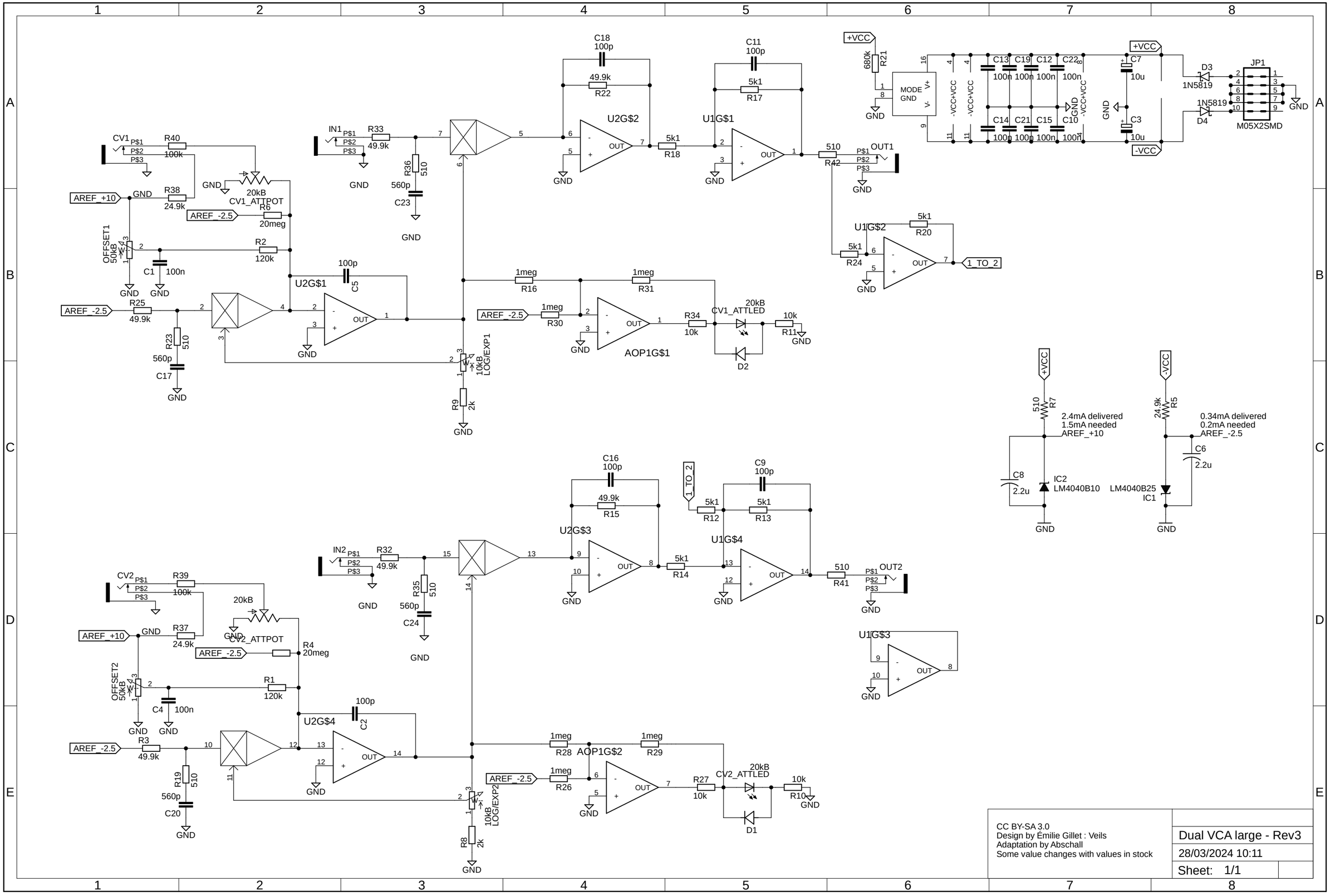

CC BY-SA 3.0
Design by Émilie Gillet : Veils
Adaptation by Abschall
Some value changes with values in stock

Dual VCA large - Rev3

28/03/2024 10:11

Sheet: 1/1