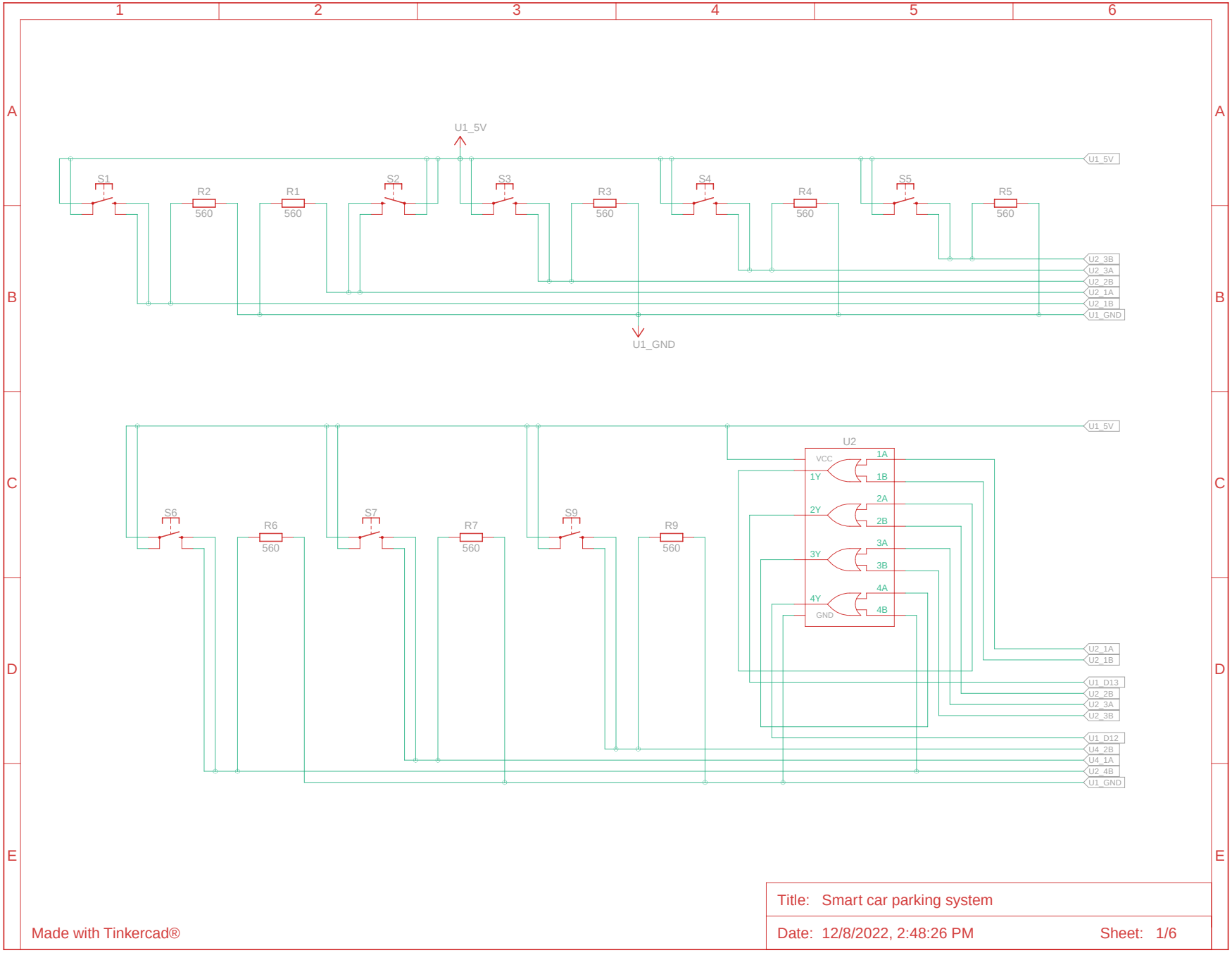

Made with Tinkercad®

Title: Smart car parking system

Date: 12/8/2022, 2:48:26 PM

Sheet: 1/6

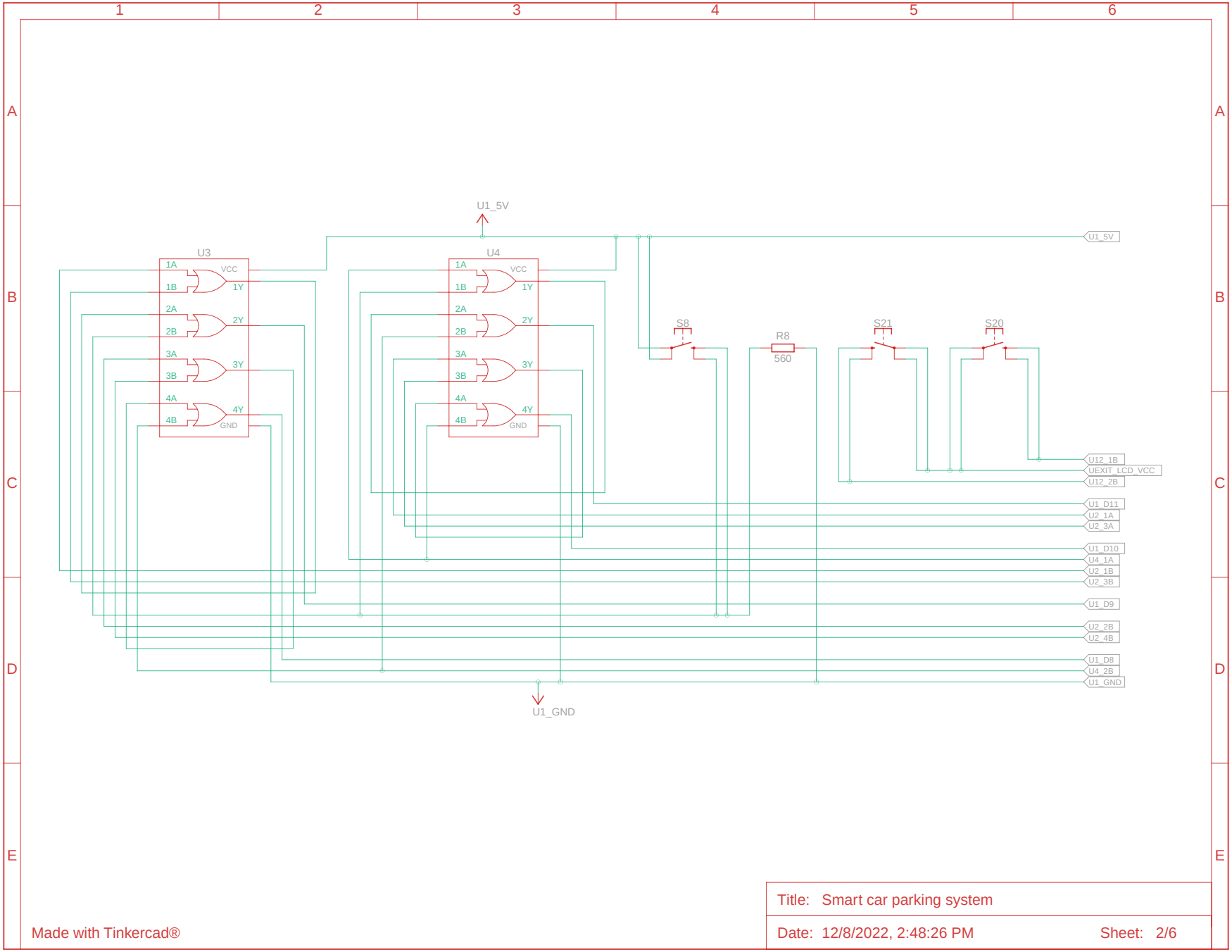

Made with Tinkercad®

Title: Smart car parking system

Date: 12/8/2022, 2:48:26 PM

Sheet: 2/6

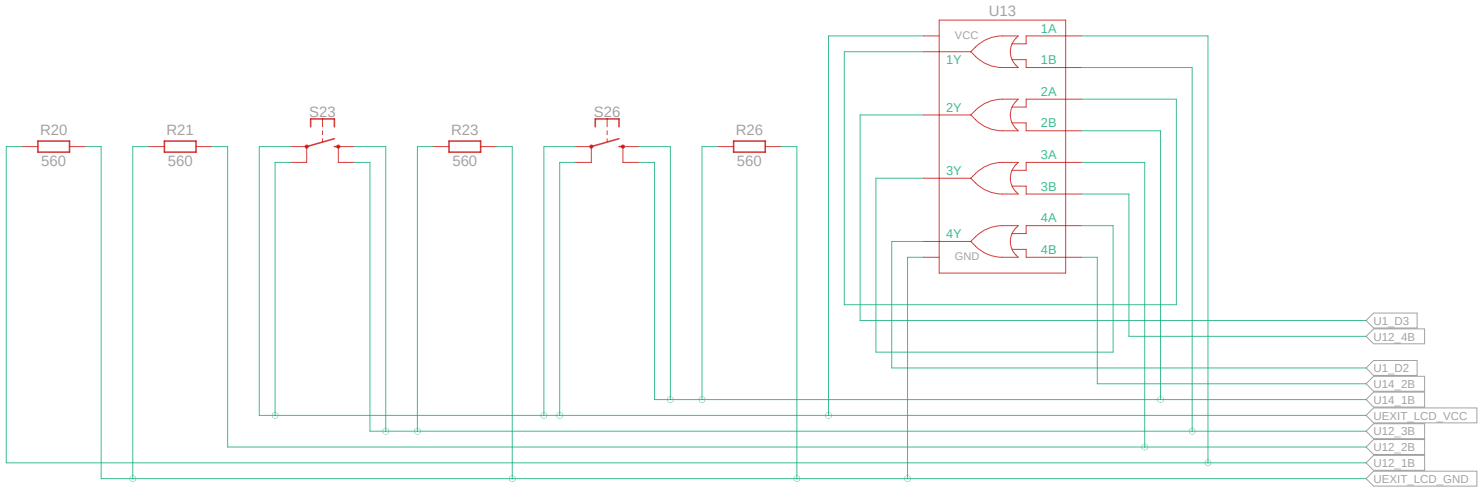

Made with Tinkercad®

Title: Smart car parking system

Date: 12/8/2022, 2:48:26 PM

Sheet: 3/6

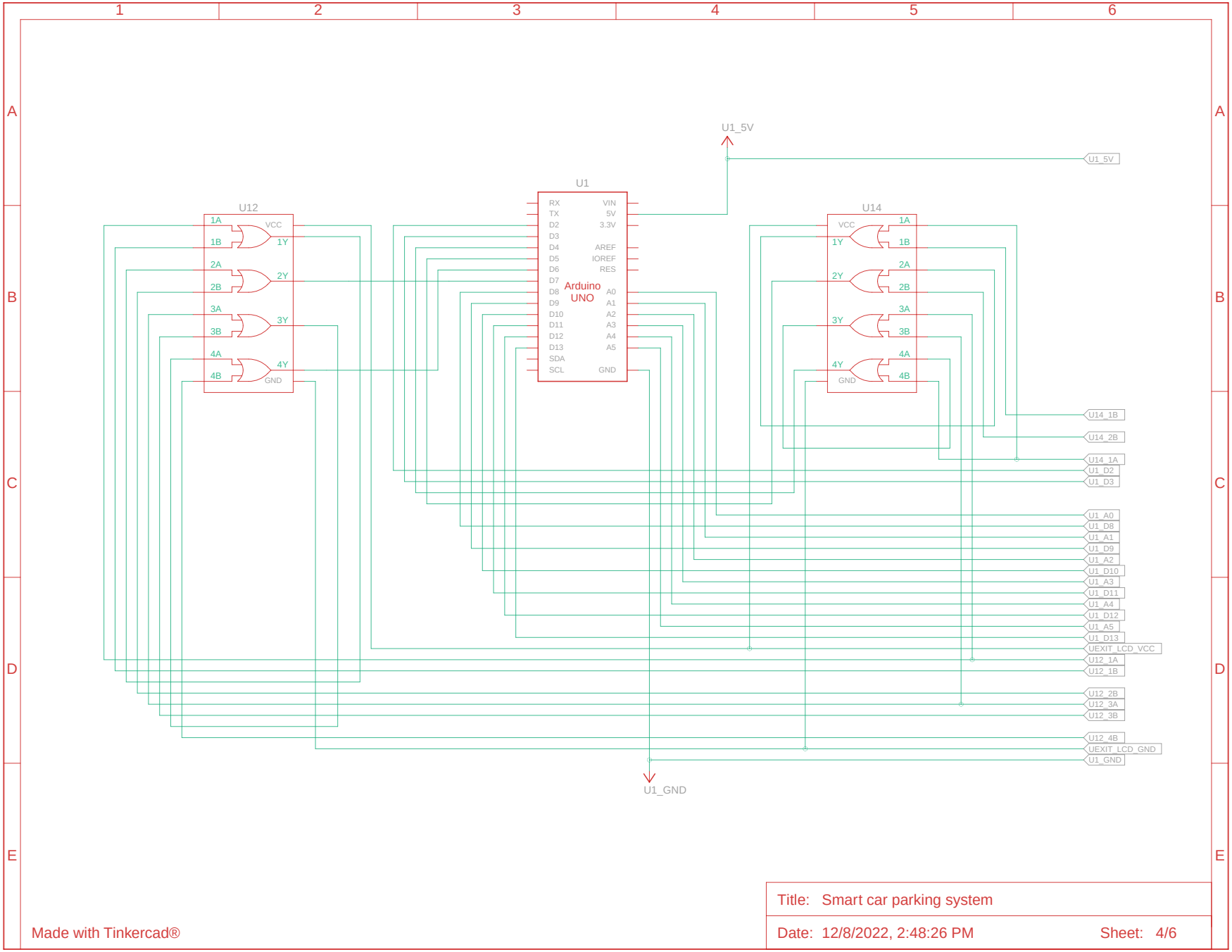

Made with Tinkercad®

Title: Smart car parking system

Date: 12/8/2022, 2:48:26 PM

Sheet: 4/6

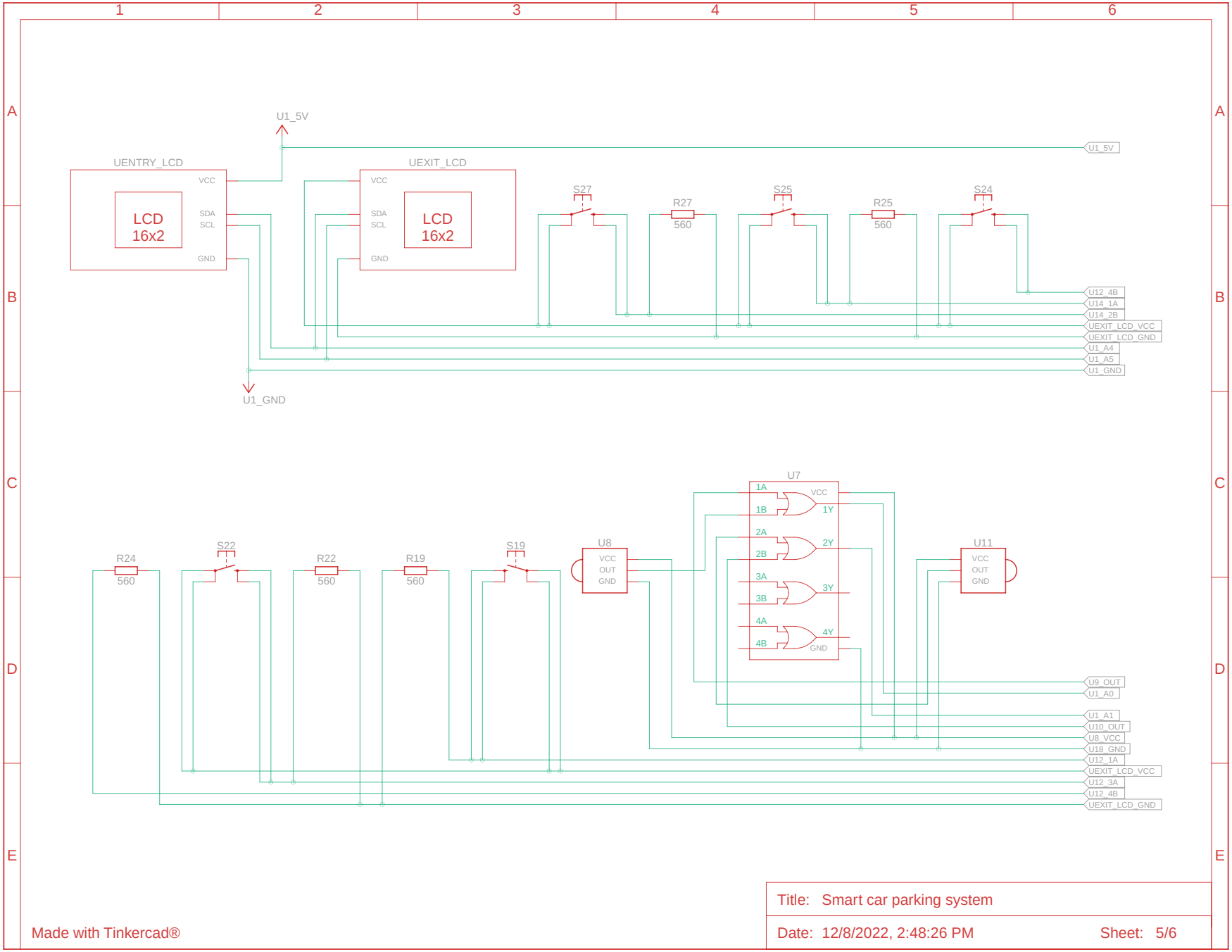

Made with Tinkercad®

Title: Smart car parking system

Date: 12/8/2022, 2:48:26 PM

Sheet: 5/6

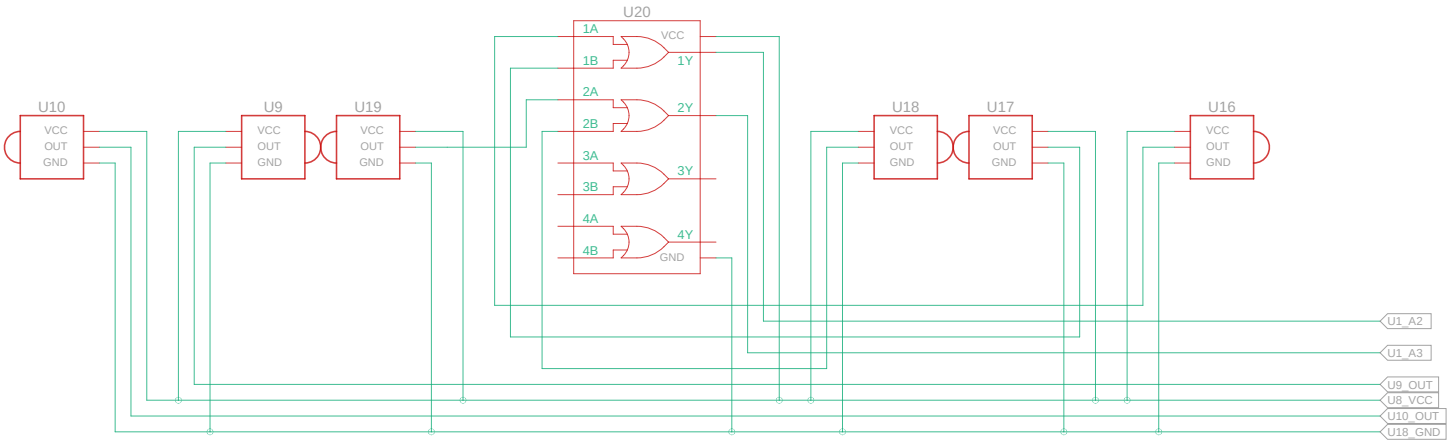

Made with Tinkercad®

Title: Smart car parking system

Date: 12/8/2022, 2:48:26 PM

Sheet: 6/6