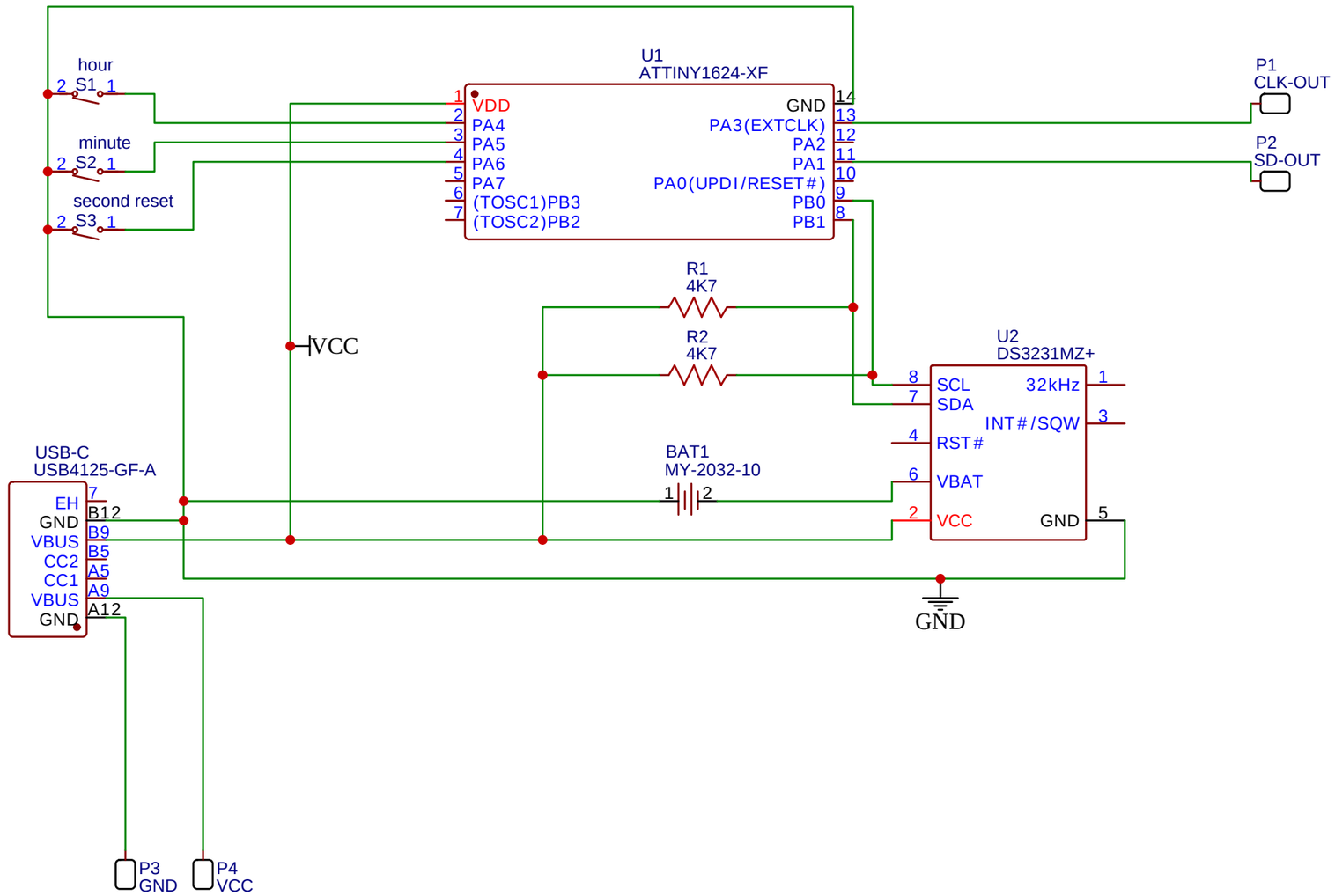

TITLE: Controller		REV: v0.1
	Company:	Sheet: 1/1
	Date: 2024-03-08 Drawn By: Adam	