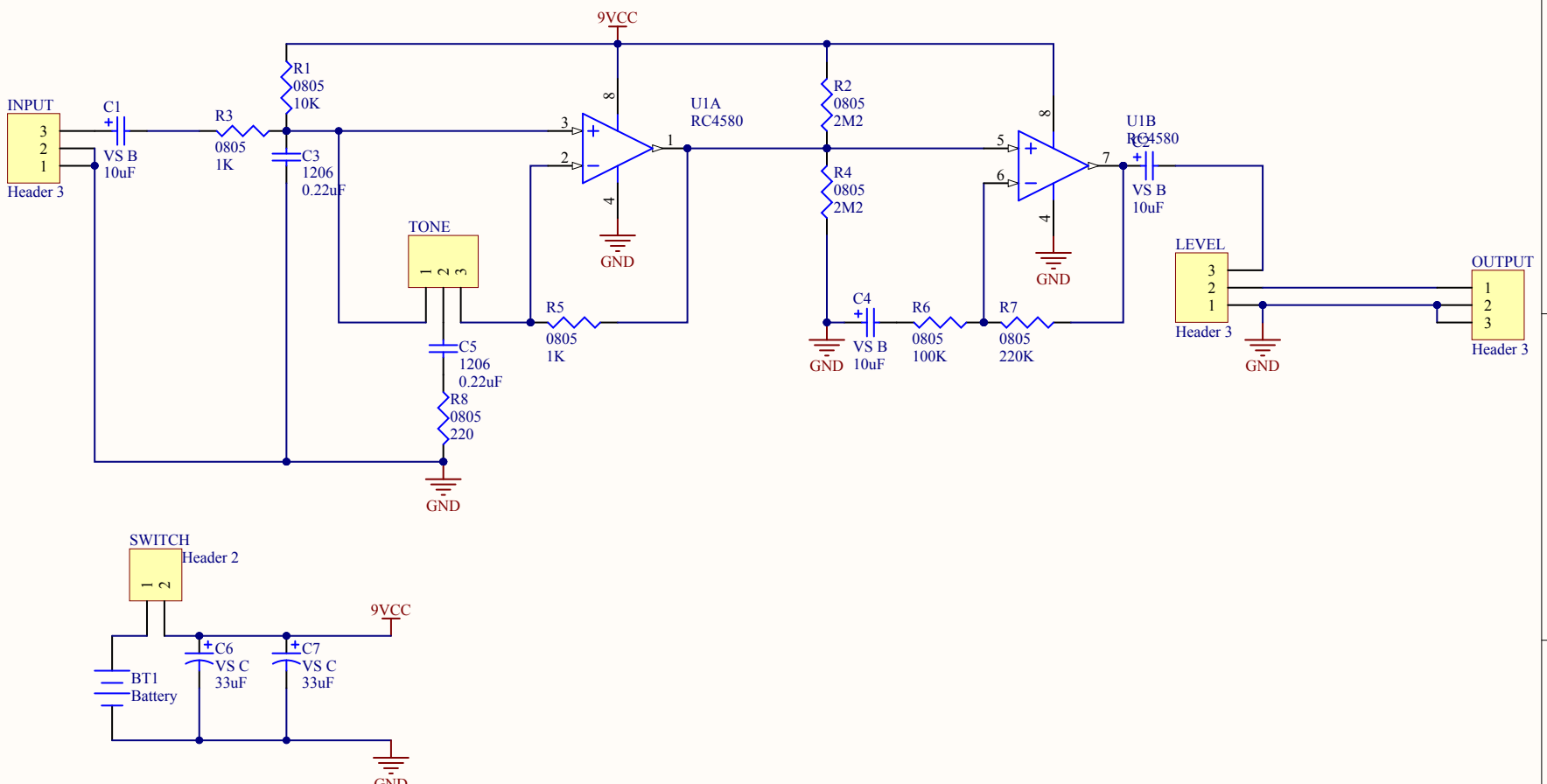

Title		
Size A	Number	Revision
Date: 7/29/2014		Sheet of
File: C:\Users\..\uPre.SchDoc		Drawn By: