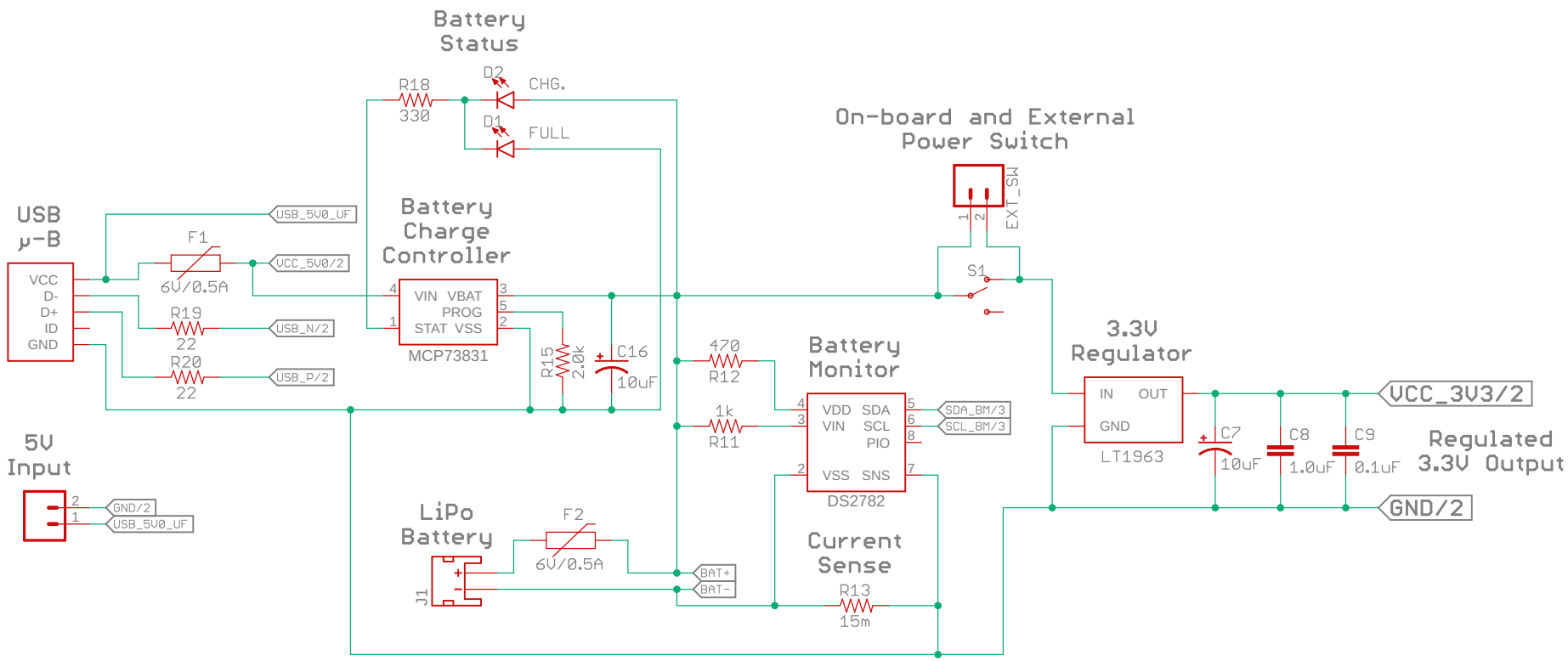

LiPo Battery

Power/Charging

TITLE: airball_sensor_board_v4

Document Number:

REV: 4

Date: 9/6/18 8:32 PM

Sheet: 1/3

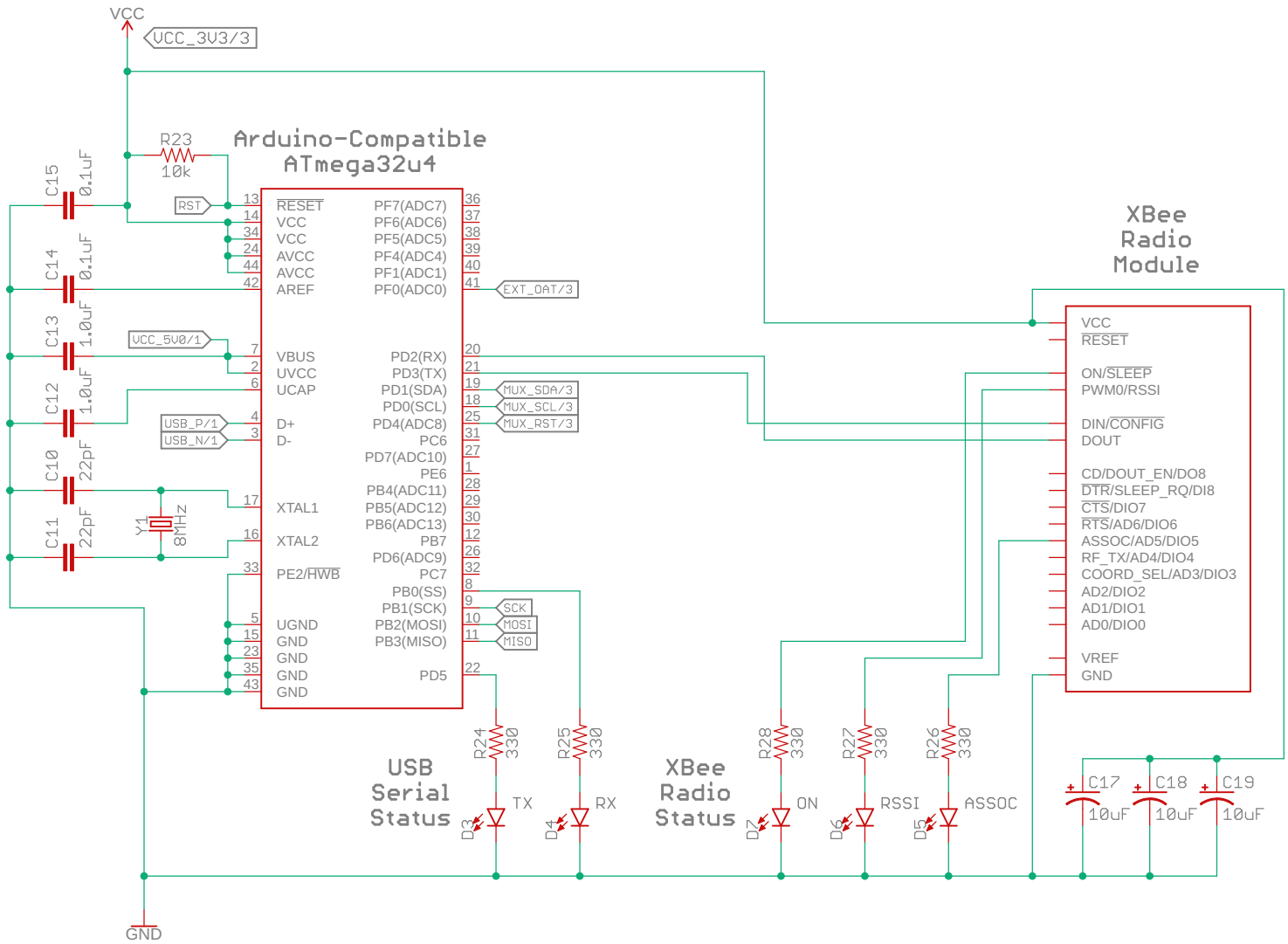

MCU/Radio

TITLE: airball_sensor_board_v4

Document Number:

REV: 4

Date: 9/6/18 8:32 PM

Sheet: 2/3

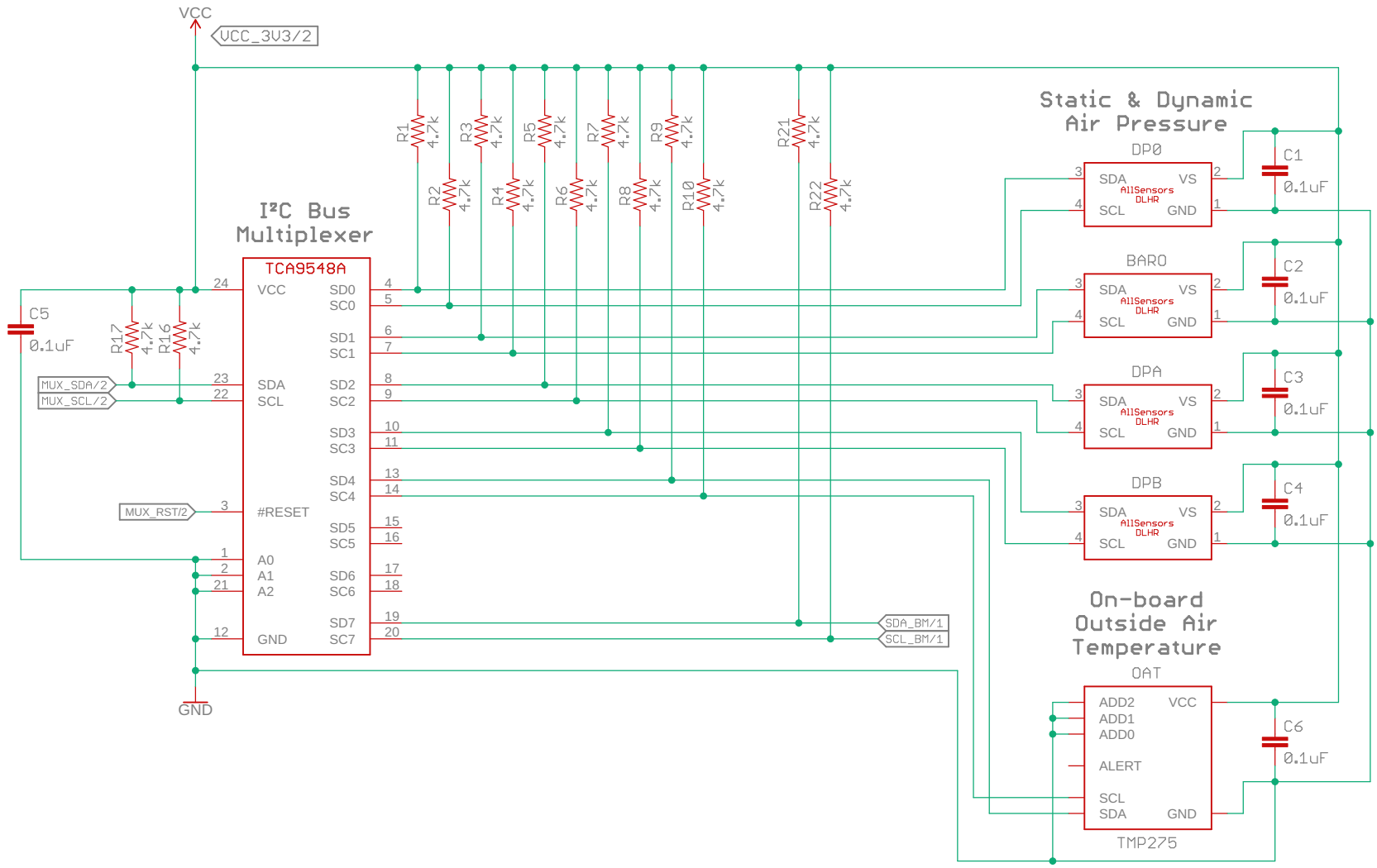

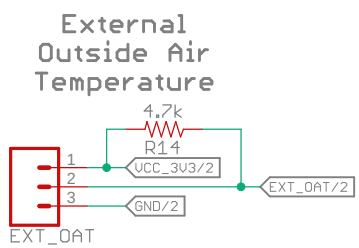

Sensors

TITLE: airball_sensor_board_v4	
Document Number:	REV: 4
Date: 9/6/18 8:32 PM	Sheet: 3/3