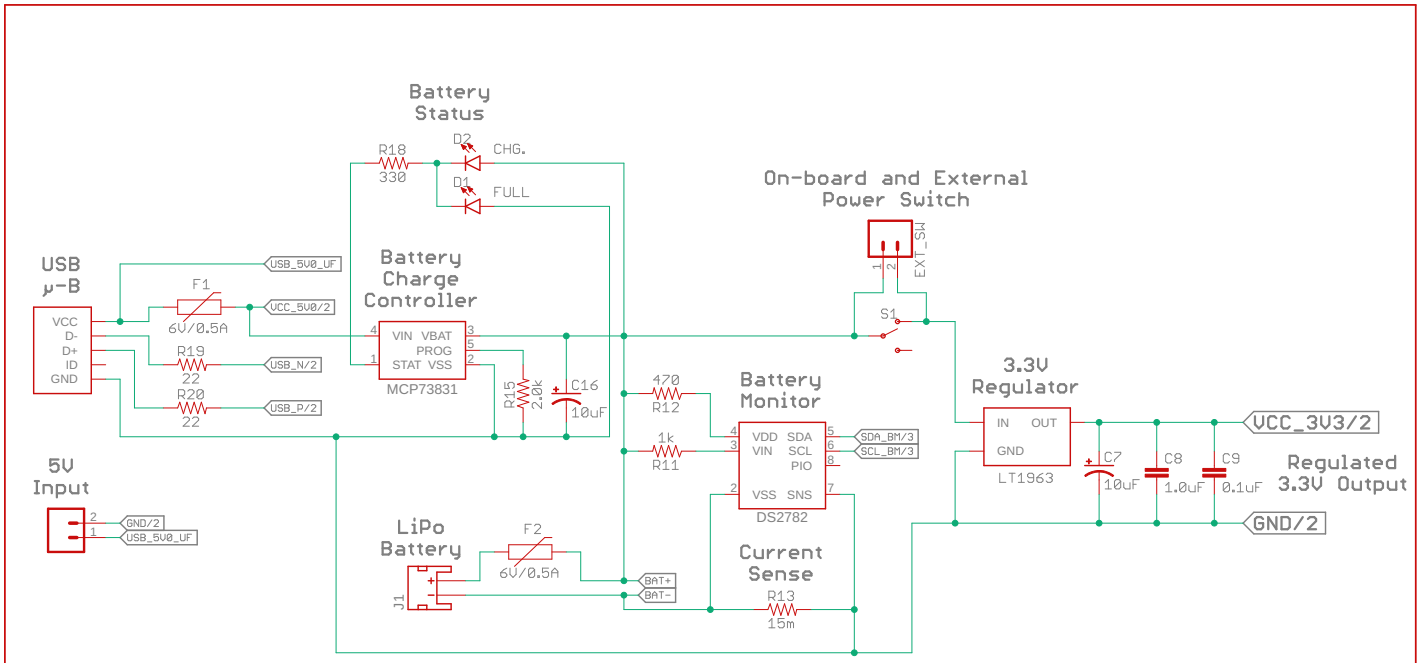

LiPo Battery

Power/Charging

TITLE: airball_sensor_board_v4

Document Number:

REV: 4

Date: 9/6/18 8:32 PM

Sheet: 1/3