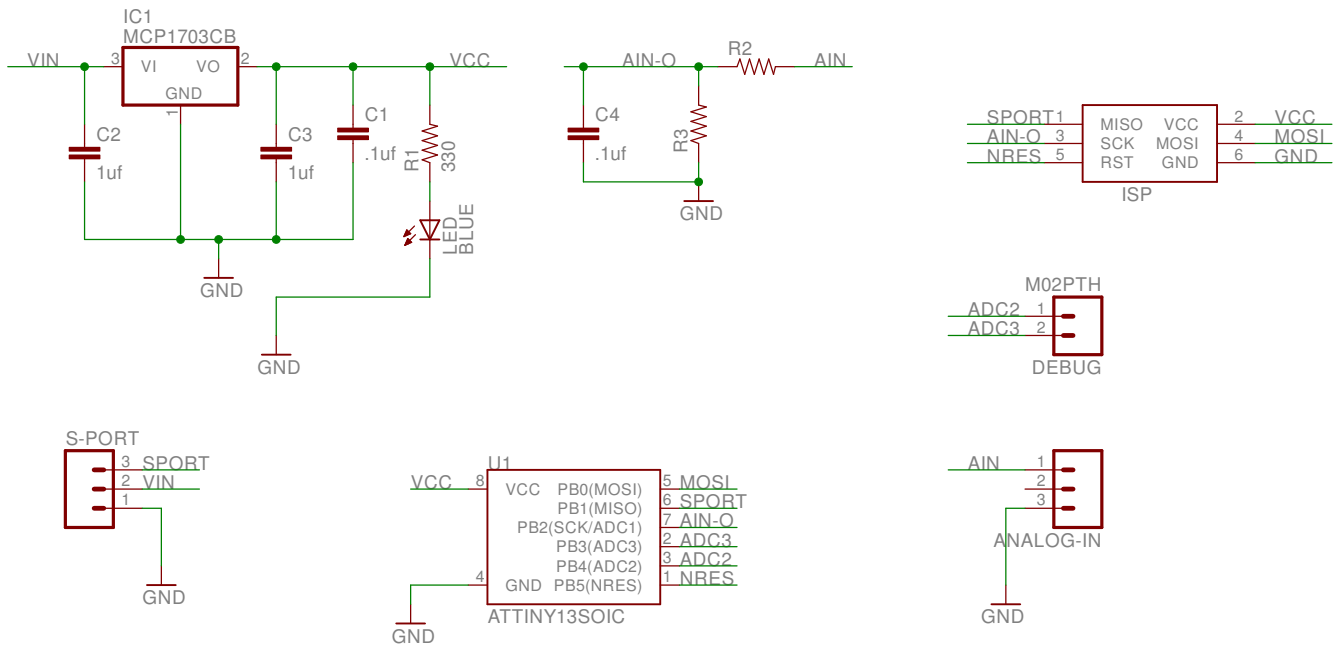

Released under the Creative Commons
Attribution Share-Alike 3.0 License
http://creativecommons.org/licenses/by-sa/3.0

TITLE: X8R analog sensor

Design by:

REV:

Date: 3/2/2014 12:34:55 PM

Sheet: 1/1