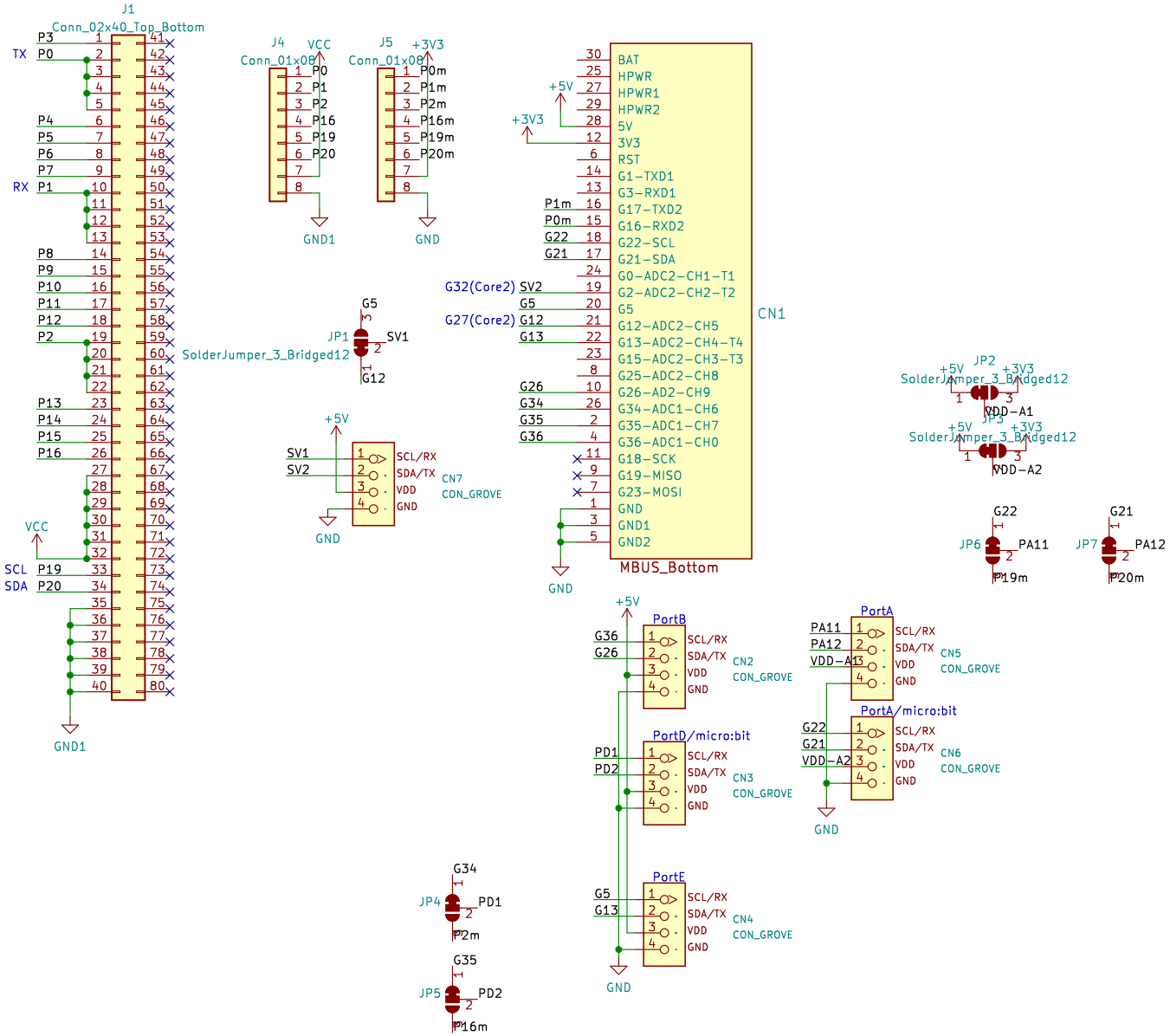
J1
Conn_02x40_Top_Bottom
TX
RX
SCL
SDA
VCC
GND1
J4
Conn_01x08
VCC
P0
P1
P2
P16
P19
P20
GND1
J5
Conn_01x08
+3V3
P0m
P1m
P2m
P16m
P19m
P20m
GND
CN1
MBUS_Bottom
BAT
HPWR
HPWR1
HPWR2
5V
3V3
RST
G1-TXD1
G3-RXD1
G17-TXD2
G16-RXD2
G22-SCL
G21-SDA
G0-ADC2-CH1-T1
G2-ADC2-CH2-T2
G5
G12-ADC2-CH5
G13-ADC2-CH4-T4
G15-ADC2-CH3-T3
G25-ADC2-CH8
G26-AD2-CH9
G34-ADC1-CH6
G35-ADC1-CH7
G36-ADC1-CH0
G18-SCK
G19-MISO
G23-MOSI
GND
GND1
GND2
G32(Core2)
G27(Core2)
JP1
SolderJumper_3_Bridged12
SV1
SV2
CN7
CON_GROVE
SCL/RX
SDA/TX
VDD
GND
JP2
JP3
VDD-A1
VDD-A2
JP6
JP7
PA11
PA12
PortB
CN2
PortD/micro:bit
CN3
PortE
CN4
PortA
CN5
PortA/micro:bit
CN6
JP4
JP5
PD1
PD2