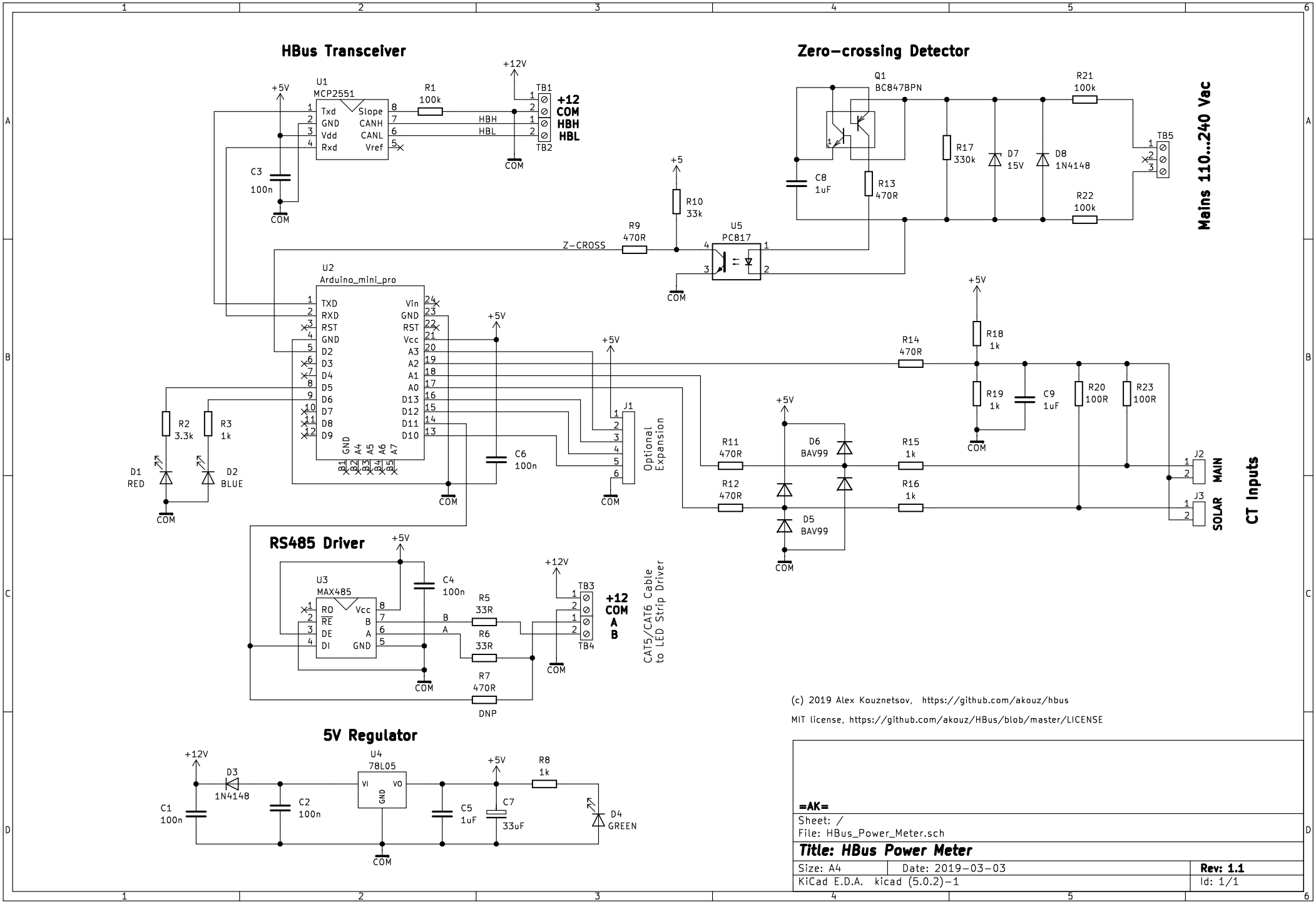
HBus Transceiver
U1
MCP2551
Txd
GND
Vdd
Rxd
Slope
CANH
CANL
Vref
R1
100k
HBH
HBL
TB1
TB2
+12
COM
HBH
HBL
+12V
+5V
C3
100n
COM
Zero-crossing Detector
Q1
BC847BPN
R21
100k
R22
100k
R17
330k
D7
15V
D8
1N4148
TB5
Mains 110...240 Vac
C8
1uF
R13
470R
R10
33k
+5
R9
470R
Z-CROSS
U5
PC817
U2
Arduino_mini_pro
TXD
RXD
RST
GND
D2
D3
D4
D5
D6
D7
D8
D9
Vin
GND
RST
Vcc
A3
A2
A1
A0
D13
D12
D11
D10
GND
A4
A5
A6
A7
B1
B2
B3
B4
B5
R2
3.3k
R3
1k
D1
RED
D2
BLUE
C6
100n
J1
Optional
Expansion
R14
470R
R18
1k
R19
1k
C9
1uF
R20
100R
R23
100R
R11
470R
R12
470R
D6
BAV99
D5
BAV99
R15
1k
R16
1k
J2
J3
MAIN
SOLAR
CT Inputs
RS485 Driver
U3
MAX485
RO
RE
DE
DI
Vcc
B
A
GND
C4
100n
R5
33R
R6
33R
R7
470R
DNP
TB3
TB4
+12
COM
A
B
CAT5/CAT6 Cable
to LED Strip Driver
5V Regulator
U4
78L05
VI
VO
GND
D3
1N4148
C1
100n
C2
100n
C5
1uF
C7
33uF
R8
1k
D4
GREEN
(c) 2019 Alex Kouznetsov, https://github.com/akouz/hbus
MIT license, https://github.com/akouz/HBus/blob/master/LICENSE
=AK=
Sheet: /
File: HBus_Power_Meter.sch
Title: HBus Power Meter
Size: A4
Date: 2019-03-03
Rev: 1.1
KiCad E.D.A. kicad (5.0.2)-1
Id: 1/1