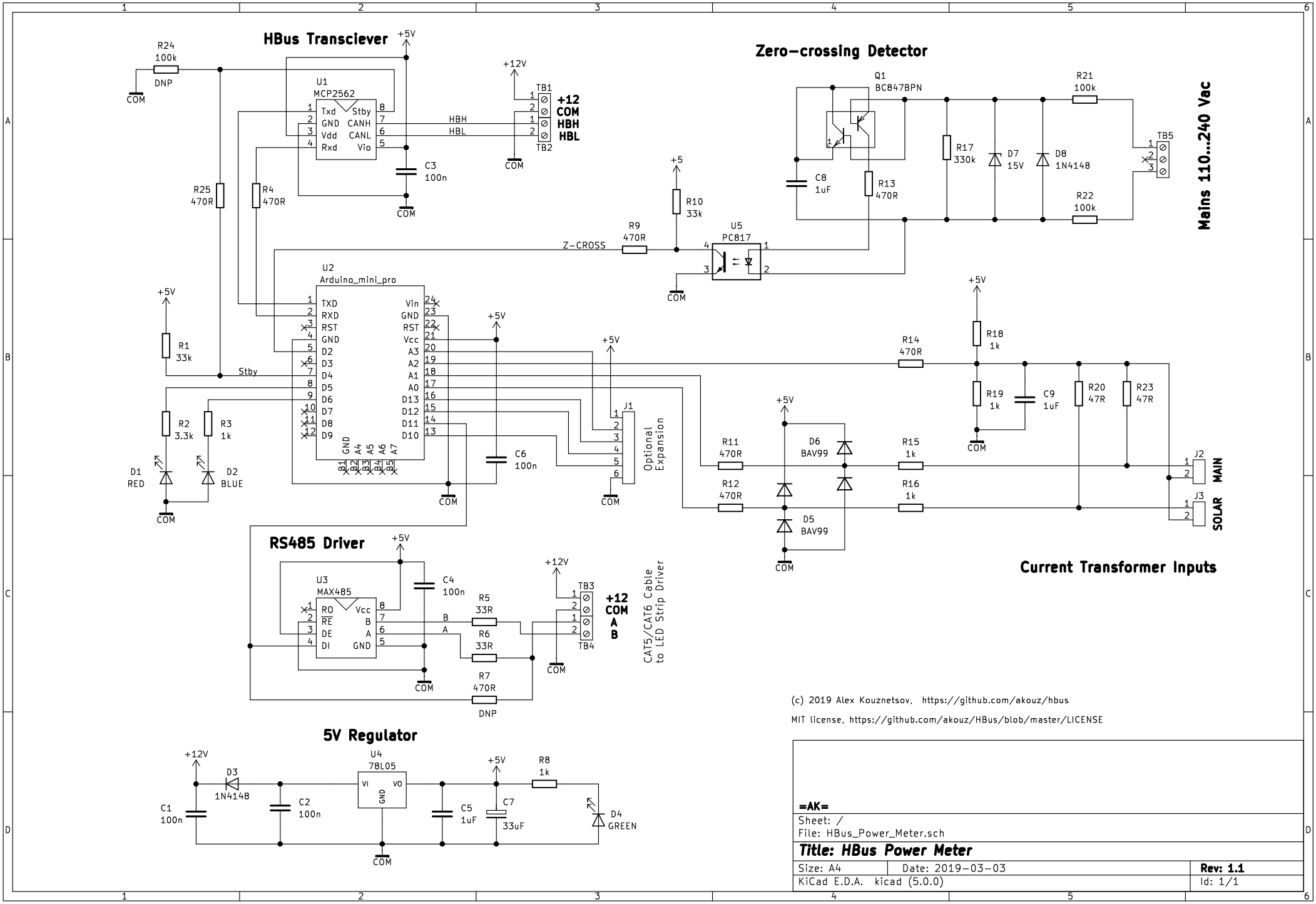
HBus Transciever
Zero-crossing Detector
Mains 110...240 Vac
RS485 Driver
5V Regulator
Current Transformer Inputs
U1
MCP2562
Txd
Stby
GND
CANH
Vdd
CANL
Rxd
Vio
U2
Arduino_mini_pro
TXD
RXD
RST
GND
D2
D3
D4
D5
D6
D7
D8
D9
Vin
Vcc
A3
A2
A1
A0
D13
D12
D11
D10
U3
MAX485
RO
RE
DE
DI
Vcc
B
A
U4
78L05
VI
VO
GND
U5
PC817
Q1
BC847BPN
TB1
TB2
TB3
TB4
TB5
J1
J2
J3
+12
COM
HBH
HBL
A
B
MAIN
SOLAR
Optional Expansion
CAT5/CAT6 Cable to LED Strip Driver
Z-CROSS
Stby
+5V
+12V
+5
R24 100k
DNP
R25 470R
R4 470R
C3 100n
R10 33k
R9 470R
R1 33k
R2 3.3k
R3 1k
D1 RED
D2 BLUE
C6 100n
R21 100k
R22 100k
R17 330k
D7 15V
D8 1N4148
C8 1uF
R13 470R
R14 470R
R18 1k
R19 1k
C9 1uF
R20 47R
R23 47R
R11 470R
R12 470R
D6 BAV99
D5 BAV99
R15 1k
R16 1k
C4 100n
R5 33R
R6 33R
R7 470R
D3 1N4148
C1 100n
C2 100n
C5 1uF
C7 33uF
R8 1k
D4 GREEN
(c) 2019 Alex Kouznetsov, https://github.com/akouz/hbus
MIT license, https://github.com/akouz/HBus/blob/master/LICENSE
=AK=
Sheet: /
File: HBus_Power_Meter.sch
Title: HBus Power Meter
Size: A4
Date: 2019-03-03
Rev: 1.1
KiCad E.D.A. kicad (5.0.0)
Id: 1/1