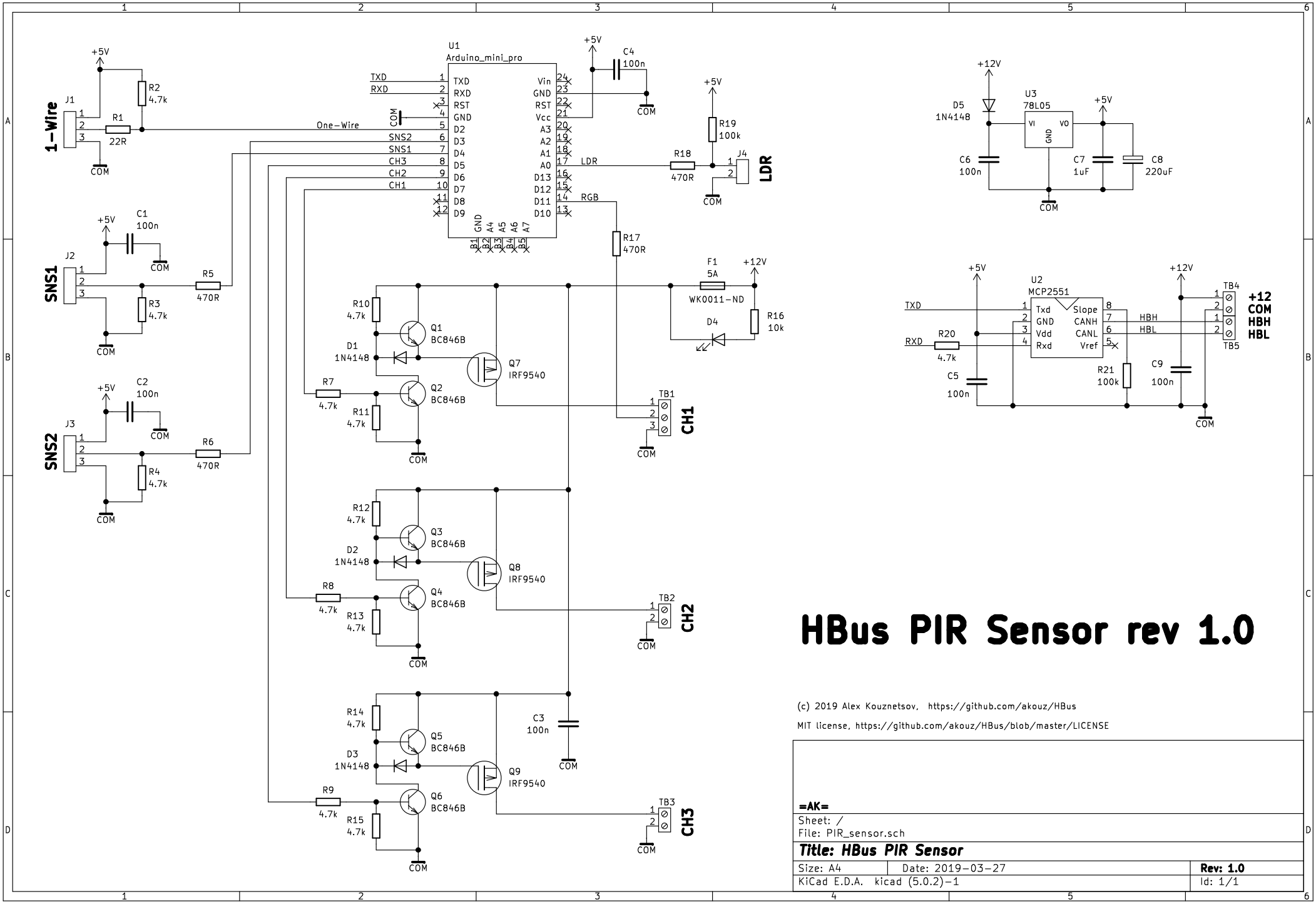
1-Wire
SNS1
SNS2
LDR
CH1
CH2
CH3
+12
COM
HBH
HBL
U1
Arduino_mini_pro
U2
MCP2551
U3
78L05
One-Wire
LDR
RGB
HBH
HBL
WK0011-ND
Q1 BC846B
Q2 BC846B
Q3 BC846B
Q4 BC846B
Q5 BC846B
Q6 BC846B
Q7 IRF9540
Q8 IRF9540
Q9 IRF9540
D1 1N4148
D2 1N4148
D3 1N4148
D4
D5 1N4148
HBus PIR Sensor rev 1.0
(c) 2019 Alex Kouznetsov, https://github.com/akouz/HBus
MIT license, https://github.com/akouz/HBus/blob/master/LICENSE
=AK=
Sheet: /
File: PIR_sensor.sch
Title: HBus PIR Sensor
Size: A4
Date: 2019-03-27
Rev: 1.0
KiCad E.D.A. kicad (5.0.2)-1
Id: 1/1