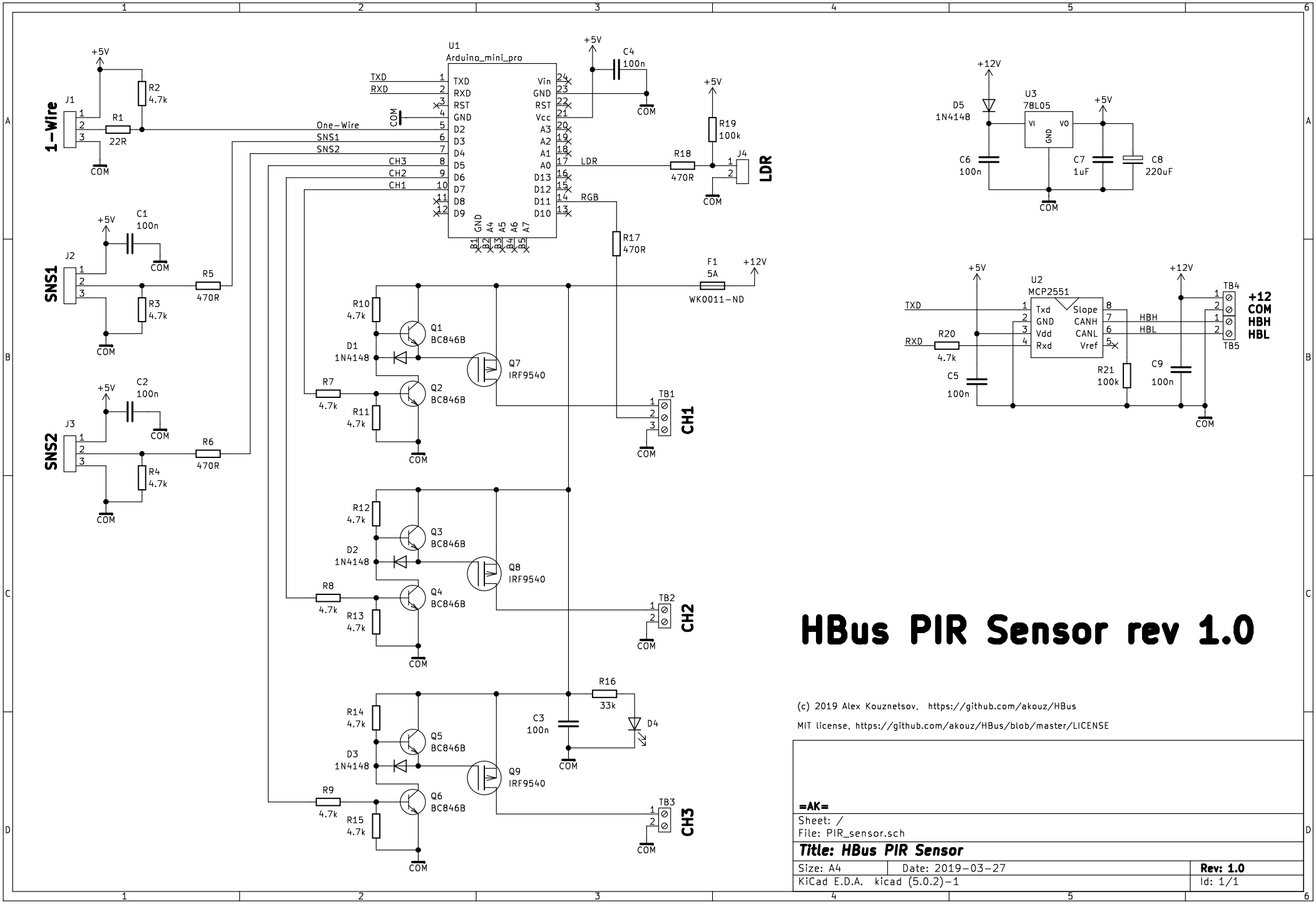

HBus PIR Sensor rev 1.0

(c) 2019 Alex Kouznetsov, https://github.com/akouz/HBus

MIT license, https://github.com/akouz/HBus/blob/master/LICENSE

=AK=

Sheet: /

File: PIR_sensor.sch

Title: HBus PIR Sensor

Size: A4	Date: 2019-03-27	Rev: 1.0
KiCad E.D.A. kicad (5.0.2)-1		Id: 1/1