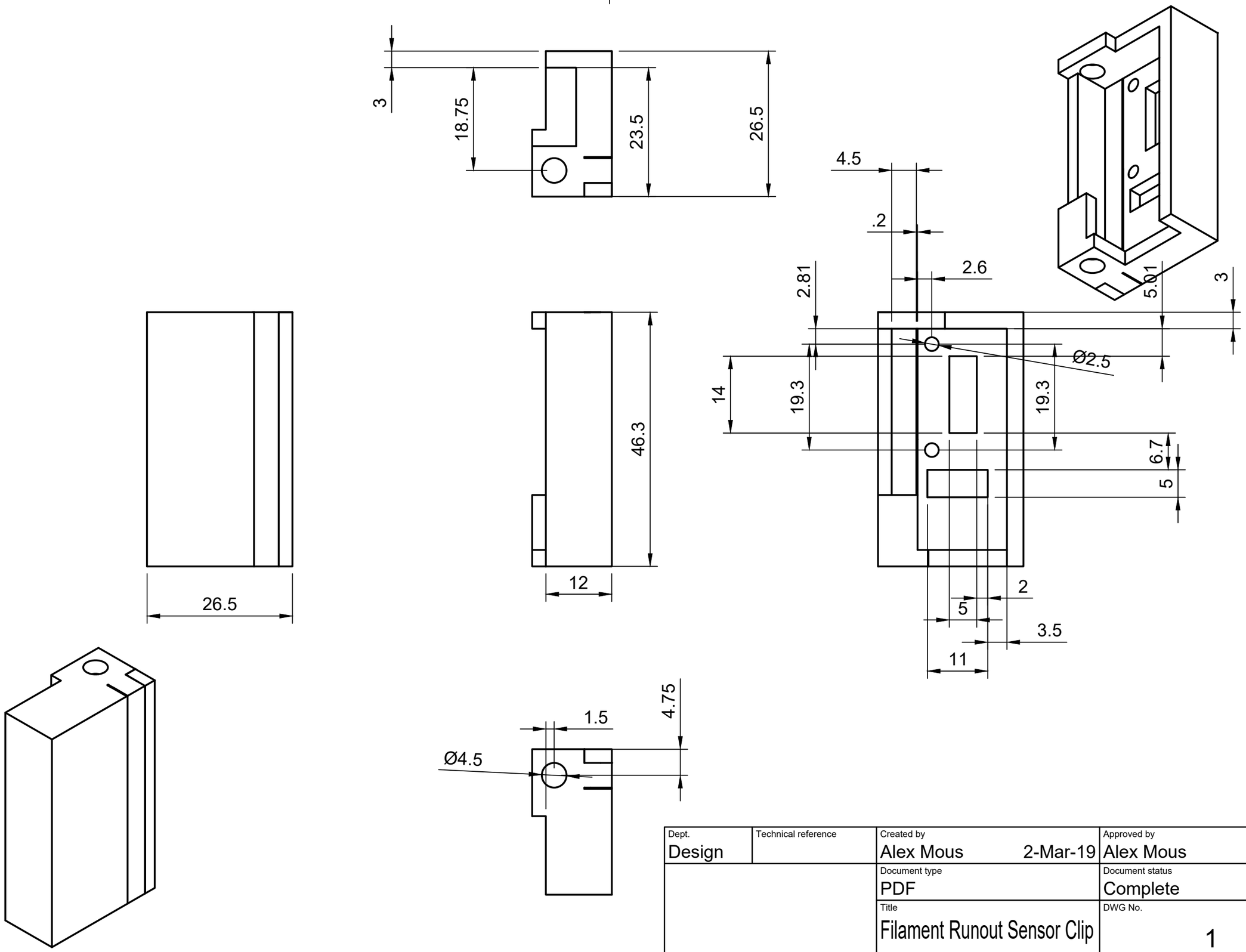

Dept.	Technical reference	Created by	Approved by
Design		Alex Mous 2-Mar-19	Alex Mous 2-Mar-19
		Document type: PDF	Document status: Complete
		Title: Filament Runout Sensor Clip	DWG No.: 1

Rev.	Date of issue	Sheet
4.0	2-Mar-19	1/1