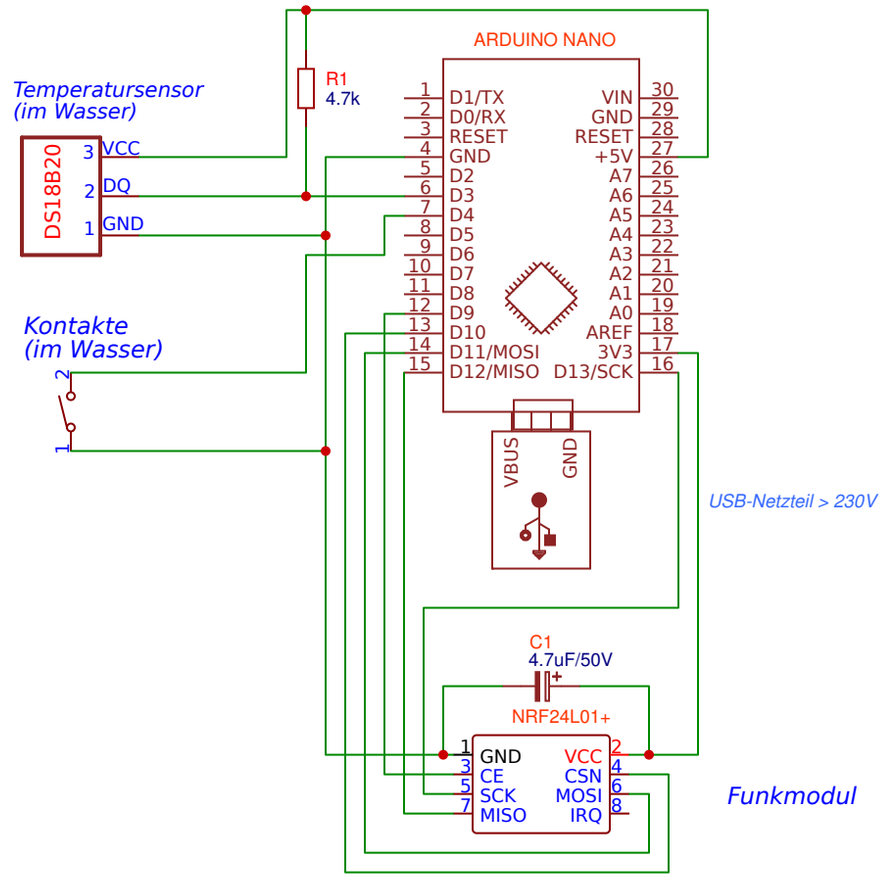

TITLE: Aquarium.Temperatur		REV: 1.0
	Company: Private	Sheet: 1/1
	Date: 2019-01-31 Drawn By: Stefan Burkhardt	