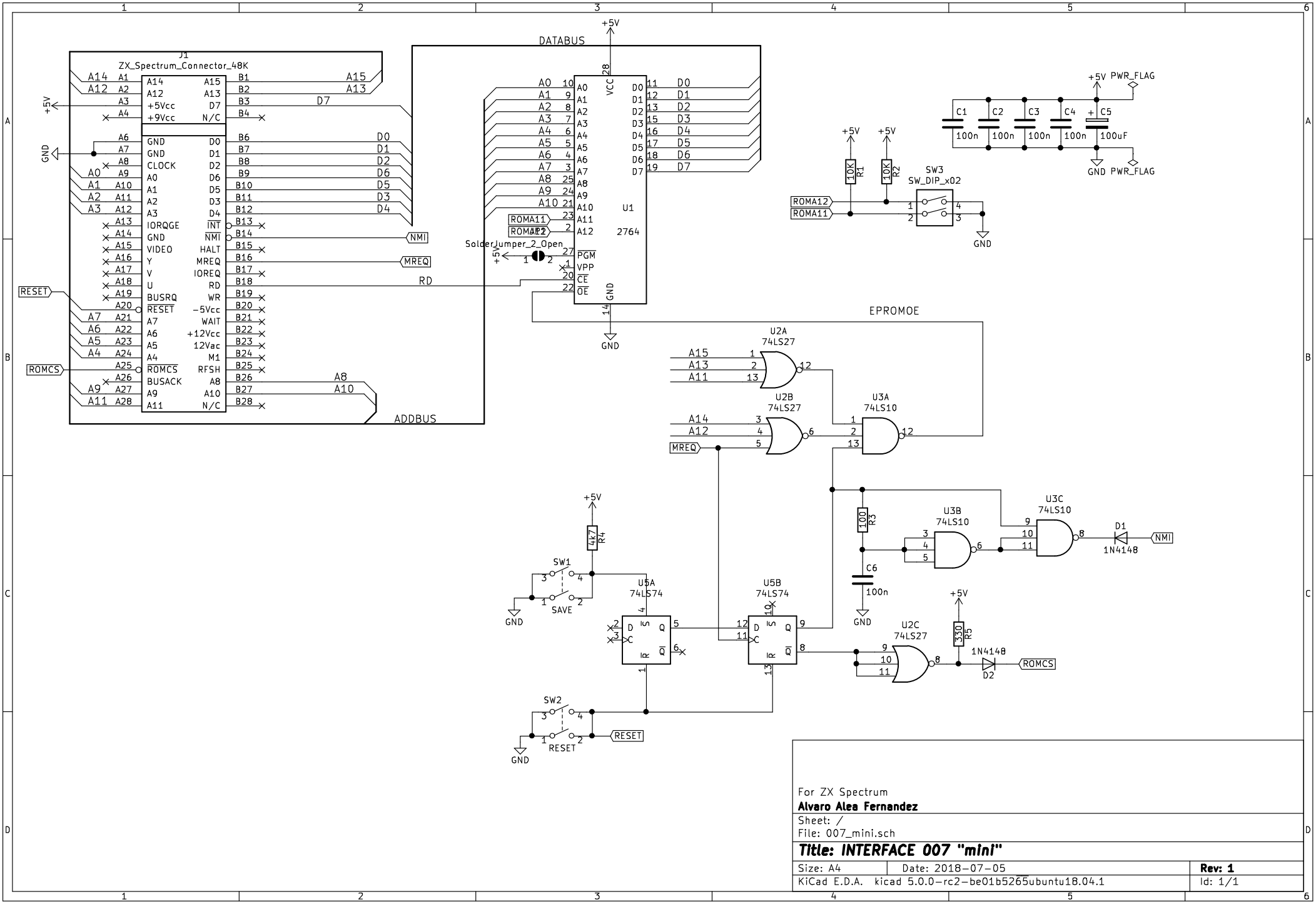

For ZX Spectrum

Alvaro Alea Fernandez

Sheet: /

File: 007_mini.sch

Title: INTERFACE 007 "mini"

Size: A4	Date: 2018-07-05	**Rev: 1**
KiCad E.D.A. kicad 5.0.0-rc2-be01b5265ubuntu18.04.1		Id: 1/1