TABLE OF CONTENTS

PAGE	TITLE
1	TABLE OF CONTENTS
2	DISC CONTROLLER LOGIC
3	MEMORY PAGING LOGIC

Disc Controler Logic

File: beta128_disk_controler.kicad_sch

Memory Paging Logic

File: beta128_memory_circuit.kicad_sch

Under Licence GPL3

Based on Rev 5 (Beta 128)

Alvaro Alea Fdz.

Sheet: /

File: beta128_r0.3.kicad_sch

Title: Beta Disk Interface

Size: A3	Date: 2020-03-13	**Rev: 0.3**
KiCad E.D.A. kicad 5.99.0-unknown-bc0fc0b88ubuntu20.04.1		Id: 1/3

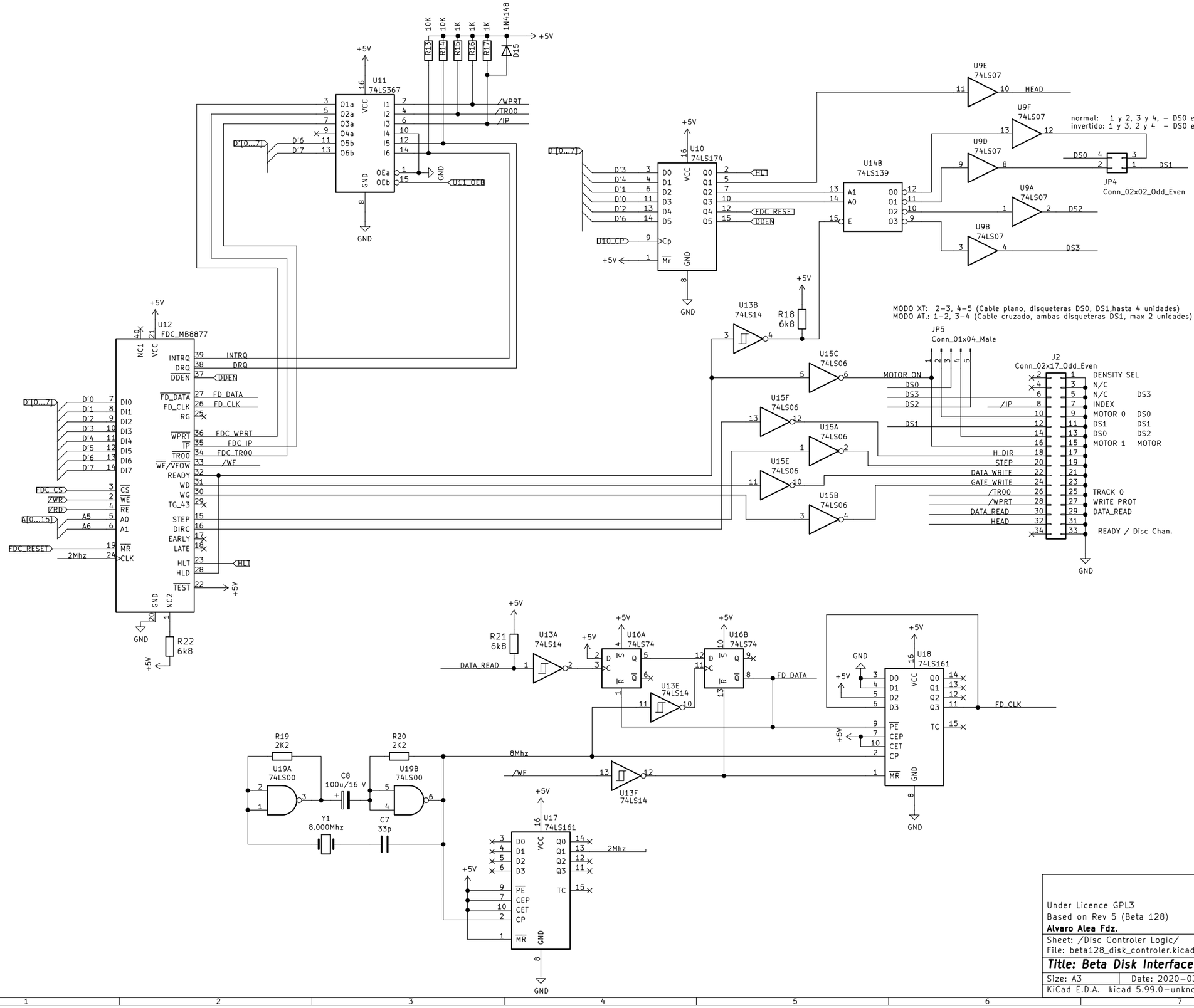

Under Licence GPL3
Based on Rev 5 (Beta 128)
Alvaro Alea Fdz.

Sheet: /Disc Controler Logic/
File: beta128_disk_controler.kicad_sch

Title: Beta Disk Interface

Size: A3	Date: 2020-03-13	**Rev: 0.3**
KiCad E.D.A. kicad 5.99.0-unknown-bc0fc0b88ubuntu20.04.1		Id: 2/3

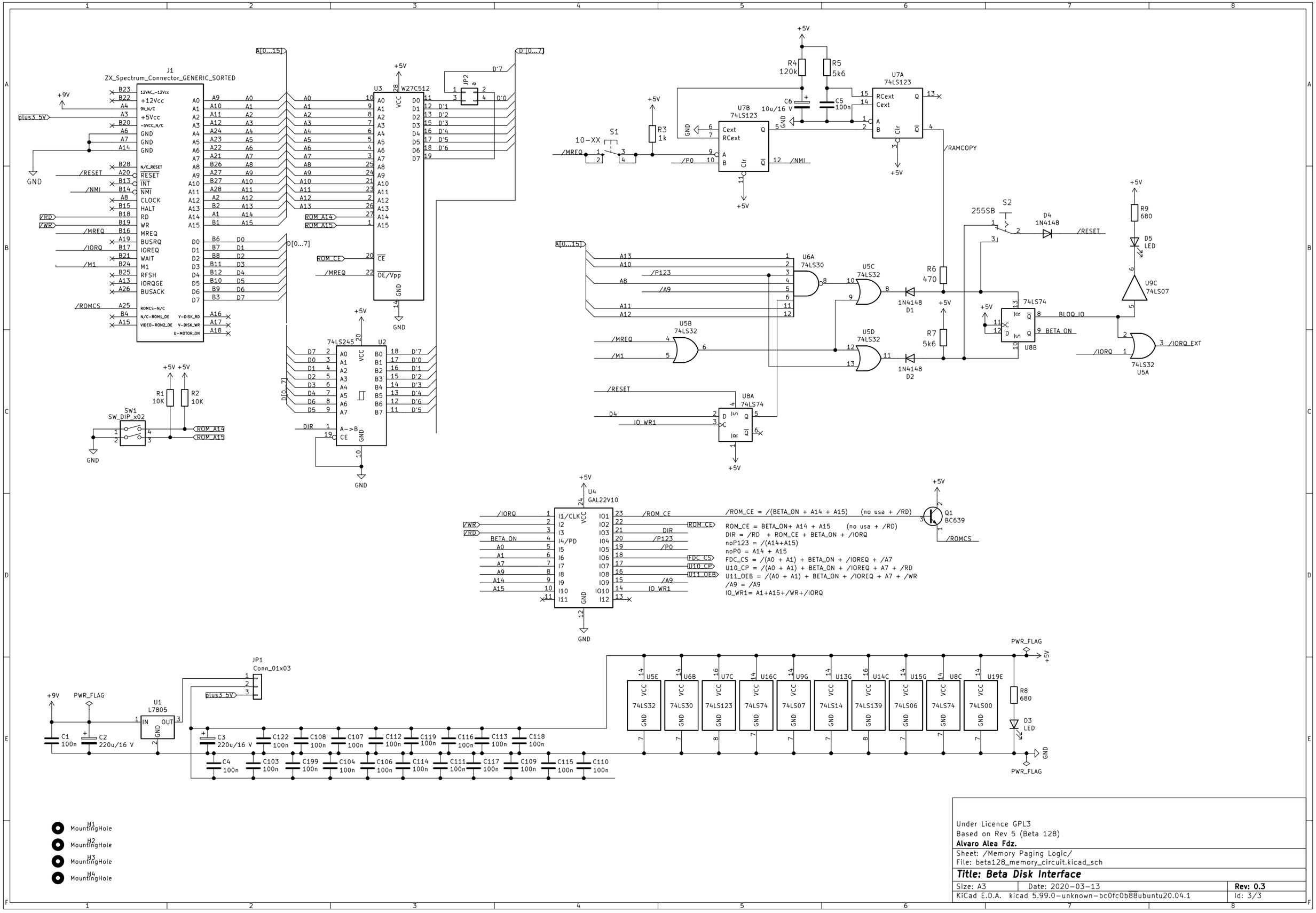

Under Licence GPL3
Based on Rev 5 (Beta 128)
Alvaro Alea Fdz.
Sheet: /Memory Paging Logic/
File: beta128_memory_circuit.kicad_sch

Title: Beta Disk Interface

Size: A3	Date: 2020-03-13	**Rev: 0.3**
KiCad E.D.A. kicad 5.99.0-unknown-bc0fc0b88ubuntu20.04.1		Id: 3/3