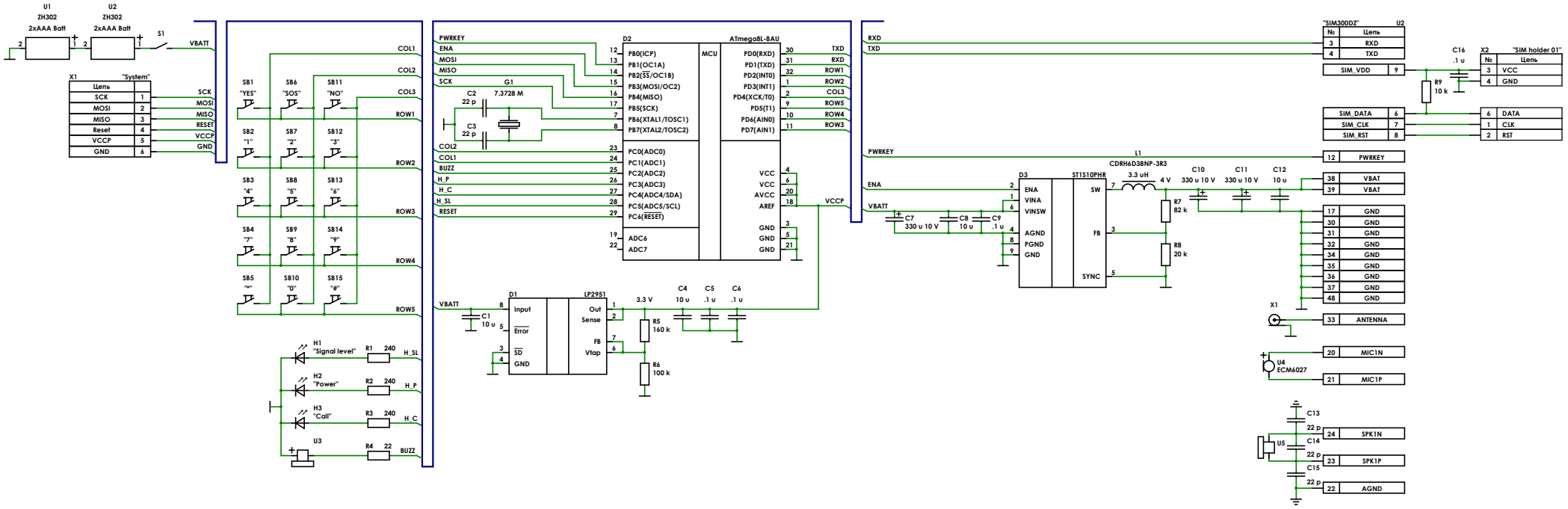

Title	GPS Phone Mammoth / sepulkary.com
Size	A1
Number	
Rev	A
Date	Feb 2013
Drawn by	
Filename	
Sheet	1 of 1