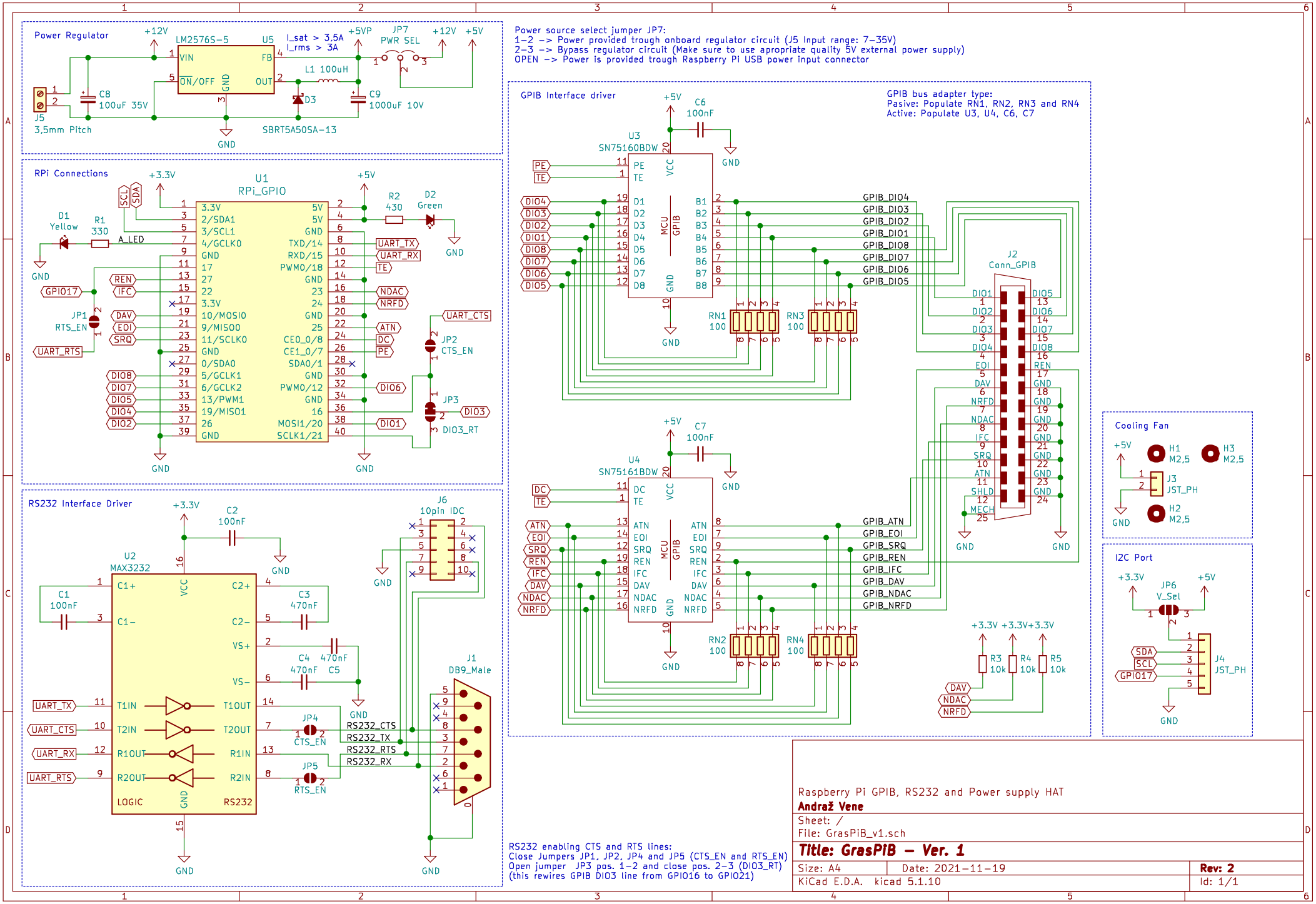
Power Regulator
LM2576S-5
U5
VIN
FB
ON/OFF
GND
OUT
+12V
I_sat > 3,5A
I_rms > 3A
+5VP
JP7
PWR SEL
+12V
+5V
L1 100uH
C8
100uF 35V
D3
C9
1000uF 10V
J5
3,5mm Pitch
SBRT5A50SA-13
GND
Power source select jumper JP7:
1-2 -> Power provided trough onboard regulator circuit (J5 Input range: 7-35V)
2-3 -> Bypass regulator circuit (Make sure to use apropriate quality 5V external power supply)
OPEN -> Power is provided trough Raspberry Pi USB power input connector
RPi Connections
U1
RPi_GPIO
+3.3V
+5V
SCL
SDA
D1
Yellow
R1
330
A_LED
R2
430
D2
Green
UART_TX
UART_RX
TE
NDAC
NRFD
ATN
DC
PE
DIO6
DIO1
UART_CTS
JP2
CTS_EN
JP3
DIO3
DIO3_RT
REN
IFC
DAV
EOI
SRQ
GPIO17
JP1
RTS_EN
UART_RTS
DIO8
DIO7
DIO5
DIO4
DIO2
GND
GPIB Interface driver
GPIB bus adapter type:
Pasive: Populate RN1, RN2, RN3 and RN4
Active: Populate U3, U4, C6, C7
U3
SN75160BDW
C6
100nF
U4
SN75161BDW
C7
100nF
MCU
GPIB
VCC
RN1
100
RN2
100
RN3
100
RN4
100
GPIB_DIO4
GPIB_DIO3
GPIB_DIO2
GPIB_DIO1
GPIB_DIO8
GPIB_DIO7
GPIB_DIO6
GPIB_DIO5
GPIB_ATN
GPIB_EOI
GPIB_SRQ
GPIB_REN
GPIB_IFC
GPIB_DAV
GPIB_NDAC
GPIB_NRFD
J2
Conn_GPIB
R3
10k
R4
10k
R5
10k
Cooling Fan
H1
M2,5
H3
M2,5
H2
M2,5
J3
JST_PH
I2C Port
JP6
V_Sel
J4
JST_PH
RS232 Interface Driver
U2
MAX3232
C1
100nF
C2
100nF
C3
470nF
C4
470nF
C5
470nF
C1+
C1-
C2+
C2-
VS+
VS-
T1IN
T2IN
R1OUT
R2OUT
T1OUT
T2OUT
R1IN
R2IN
LOGIC
RS232
JP4
CTS_EN
JP5
RTS_EN
RS232_CTS
RS232_TX
RS232_RTS
RS232_RX
J6
10pin IDC
J1
DB9_Male
RS232 enabling CTS and RTS lines:
Close Jumpers JP1, JP2, JP4 and JP5 (CTS_EN and RTS_EN)
Open jumper JP3 pos. 1-2 and close pos. 2-3 (DIO3_RT)
(this rewires GPIB DIO3 line from GPIO16 to GPIO21)
Raspberry Pi GPIB, RS232 and Power supply HAT
Andraž Vene
Sheet: /
File: GrasPiB_v1.sch
Title: GrasPiB - Ver. 1
Size: A4
Date: 2021-11-19
Rev: 2
KiCad E.D.A. kicad 5.1.10
Id: 1/1