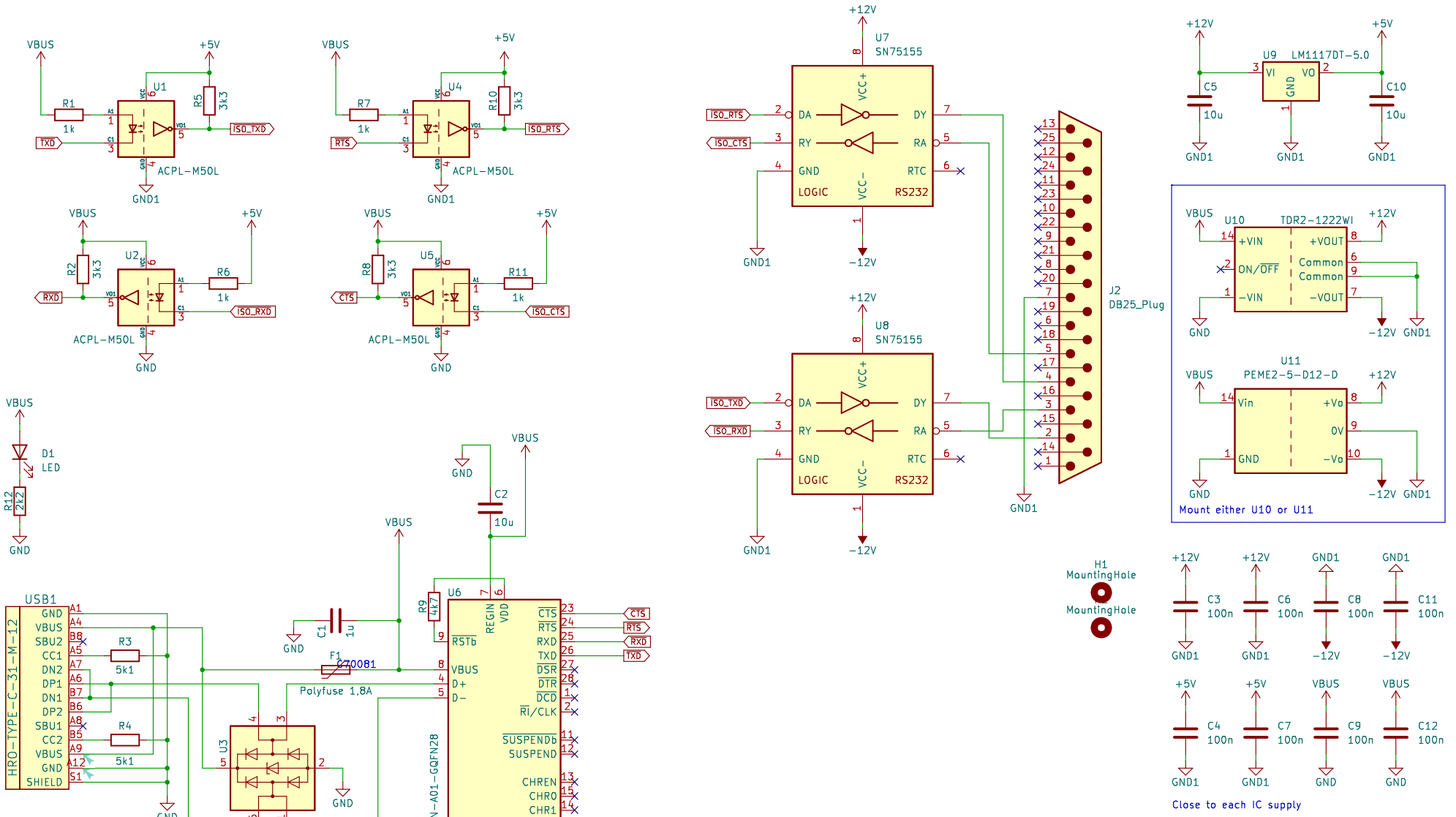

Anders Sandahl

Sheet: /

File: usb-serial.kicad_sch

Title: Opto isolated USB to RS232 converter

Size: A4	Date:	Rev: 1
KiCad E.D.A. kicad 7.0.7+dfsg-1		Id: 1/1