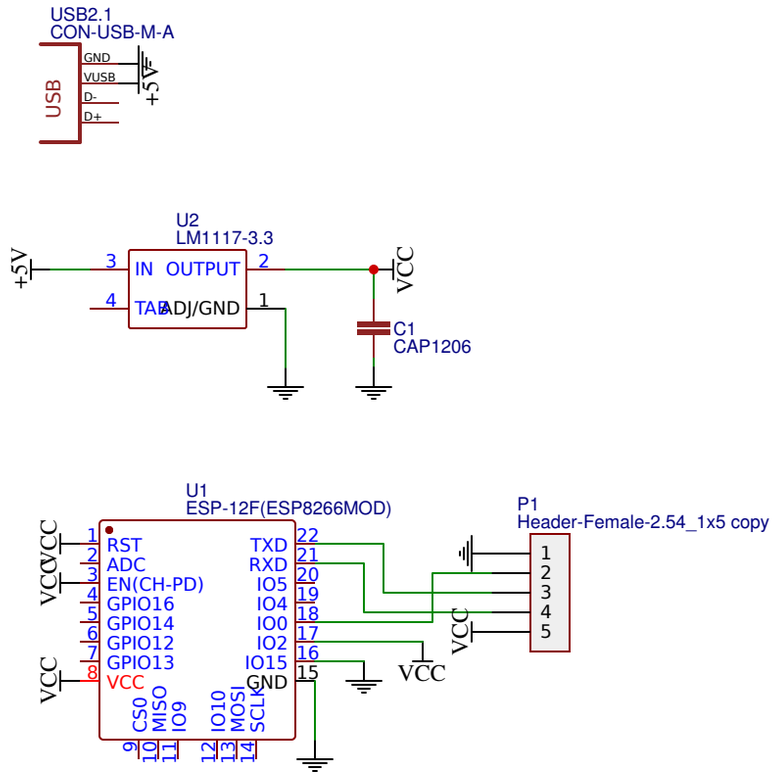

TITLE: ESPKey		REV: 1.0
EasyEDA	Company: Eponymous Labs	Sheet: 1/1
	Date: 2019-04-11 Drawn By: Kevin Kwok	