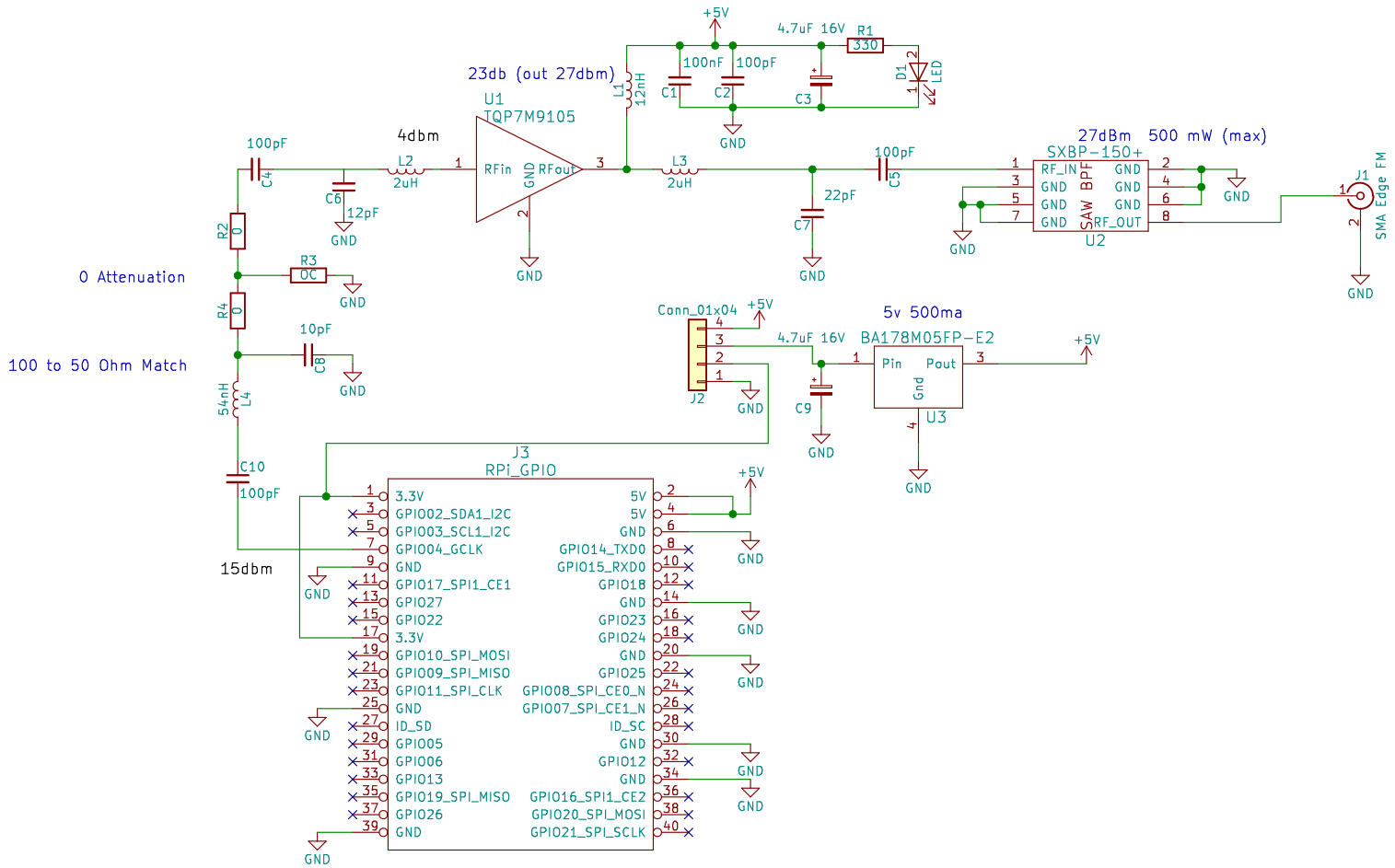

2m Filter

Filter SXBP-140+
rf Amp SKY65017-70LF
MAAM-011185-TR1000
TQP7M9105

2m and 70cm filter
This Board is a an RF transmitter board for VHF and UHF
Giga Technology

Sheet: /
File: africube2.sch

Title: IQ modulator 300 to 1.5Ghz

Size: A3	Date: 2018-06-01	**Rev: V1.0**
KiCad E.D.A. kicad 4.0.7-e2-637661ubuntu18.04.1		Id: 1/1