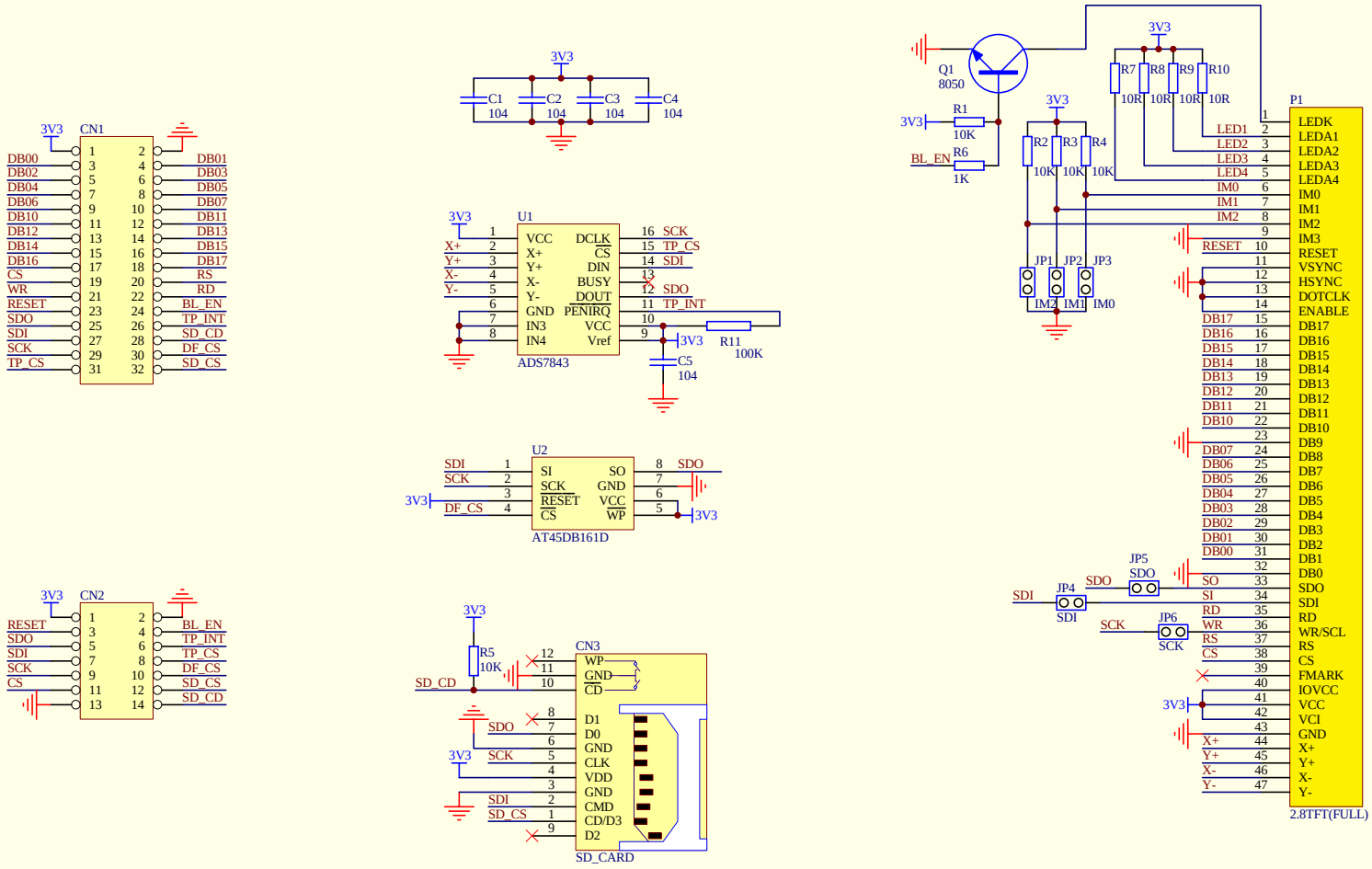

Title		
Size A4	Number **2.8 TFT(full)**	Revision **V1.0**
Date: 7-Dec-2009	Sheet of	
File: F:\Modules.ddb	Drawn By:	