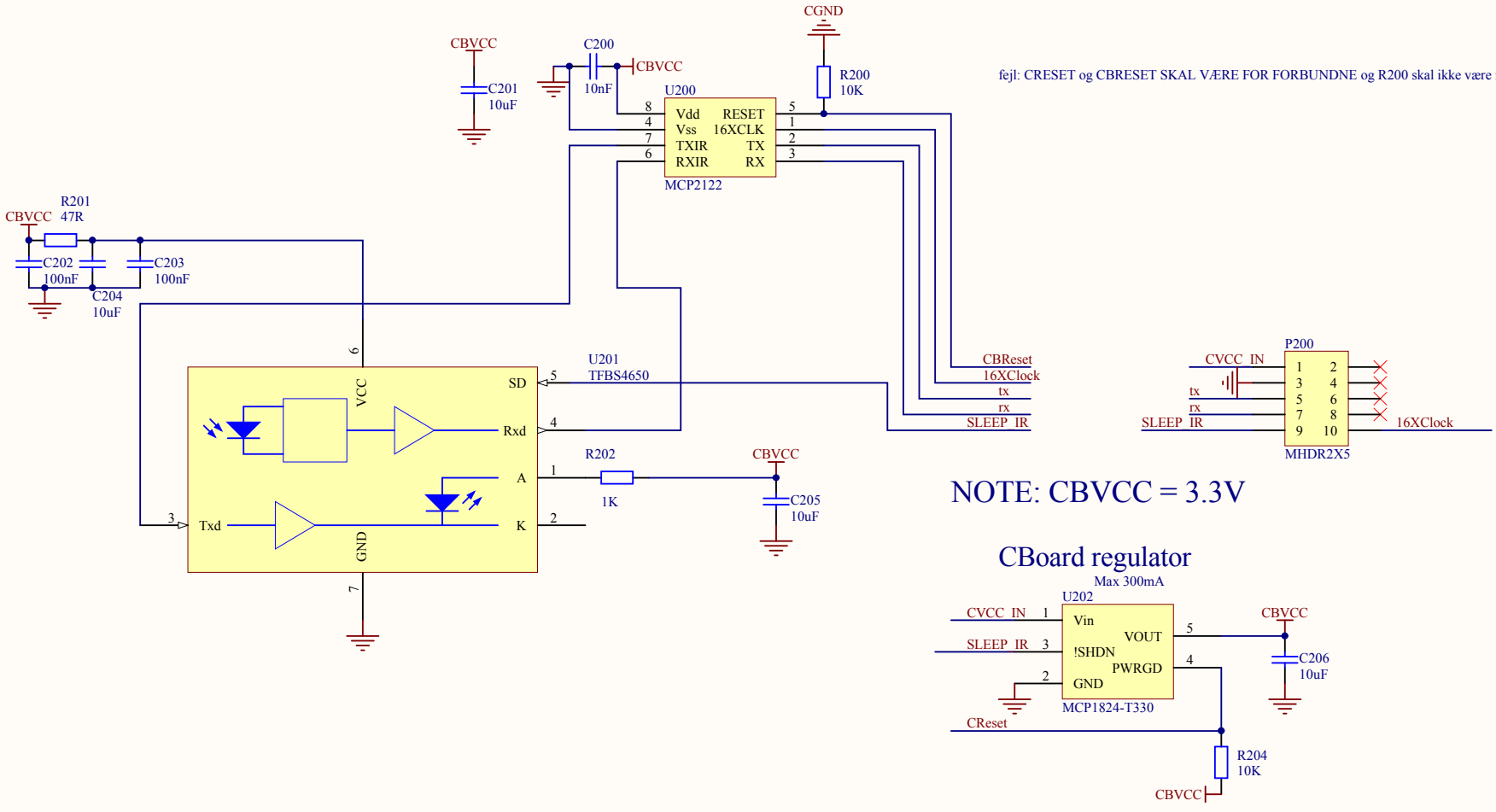

Title		
Size: A4	Number	Revision
Date: 06-09-2011		Sheet of
File: C:\work\..\comm_IrDA.SchDoc		Drawn By:

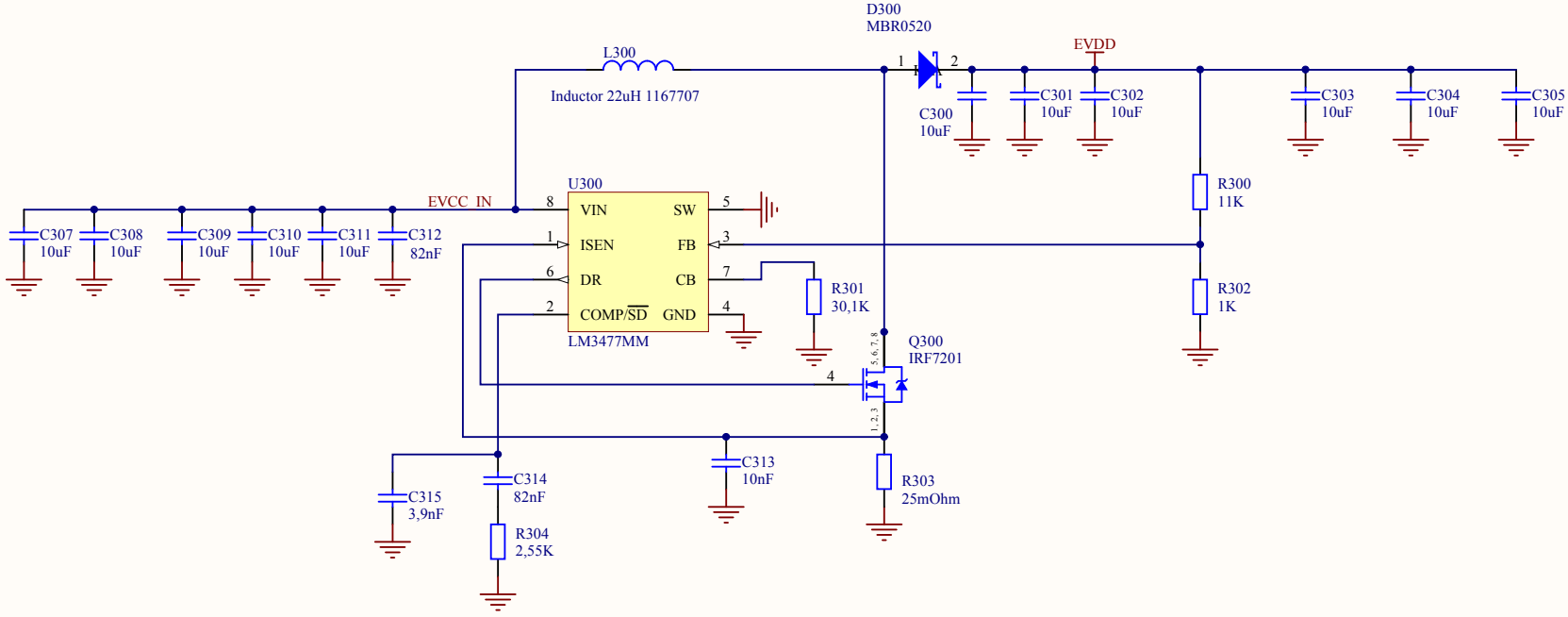

Title		
Size A4	Number	Revision
Date: 06-09-2011		Sheet of
File: C:\work\..\DC_DC.schdoc		Drawn By:

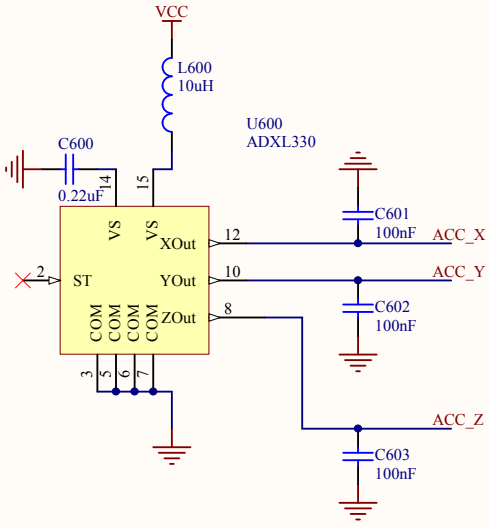

Title		
Size: A4	Number	Revision
Date: 06-09-2011		Sheet of
File: C:\work\..\ext_accelero.SchDoc		Drawn By:

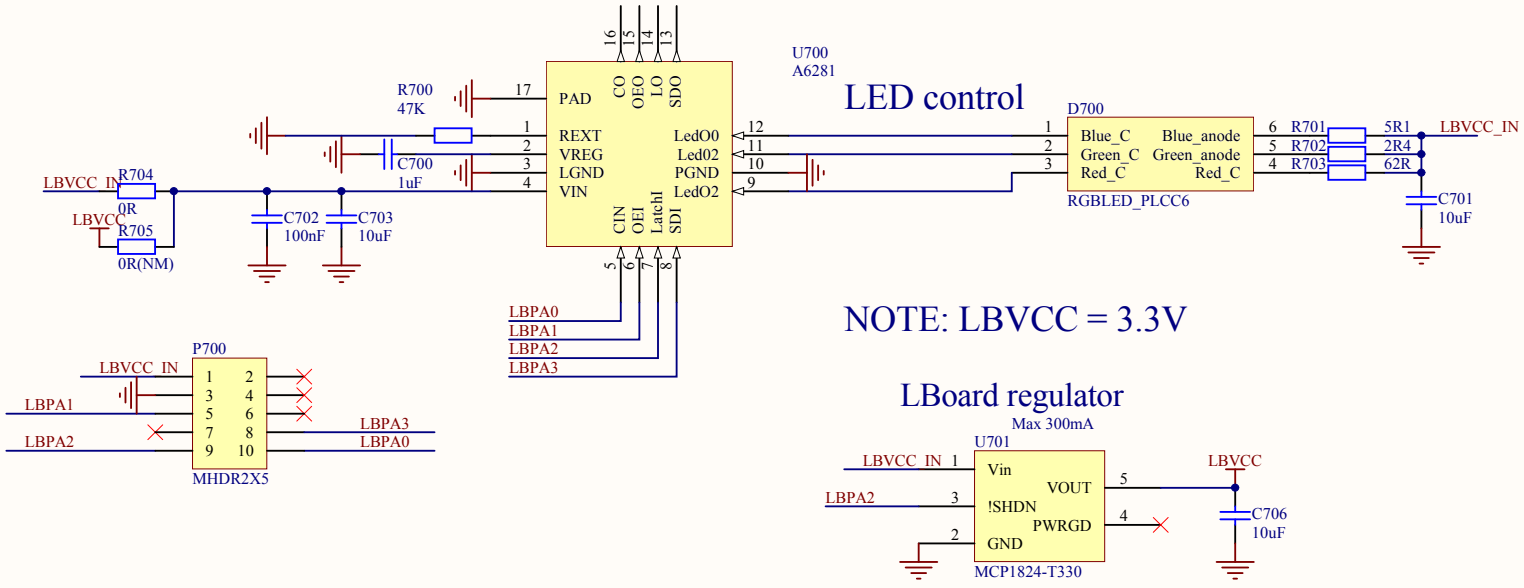

Title		
Size: A4	Number	Revision
Date: 06-09-2011		Sheet of
File: C:\work\..\ext_multicolourLED.SchDoc		Drawn By:

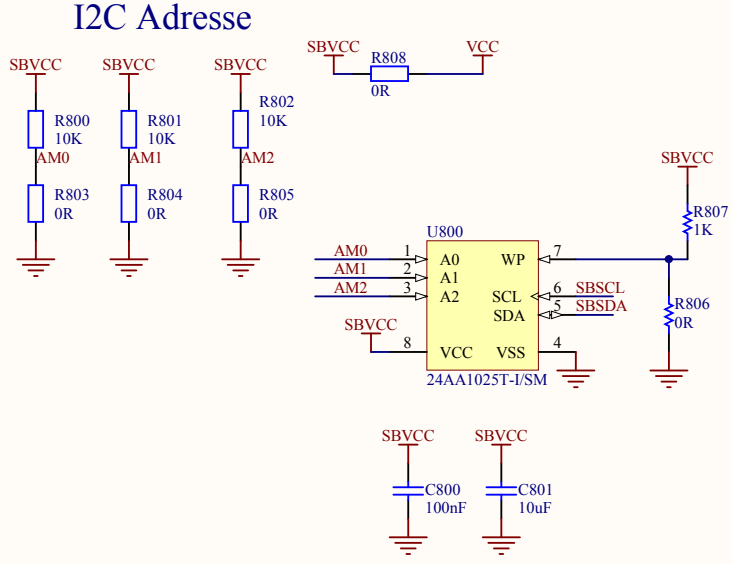

Title			
Size A4	Number		Revision
Date:	06-09-2011	Sheet of	
File:	C:\work\..\ext_storage.SchDoc	Drawn By:	

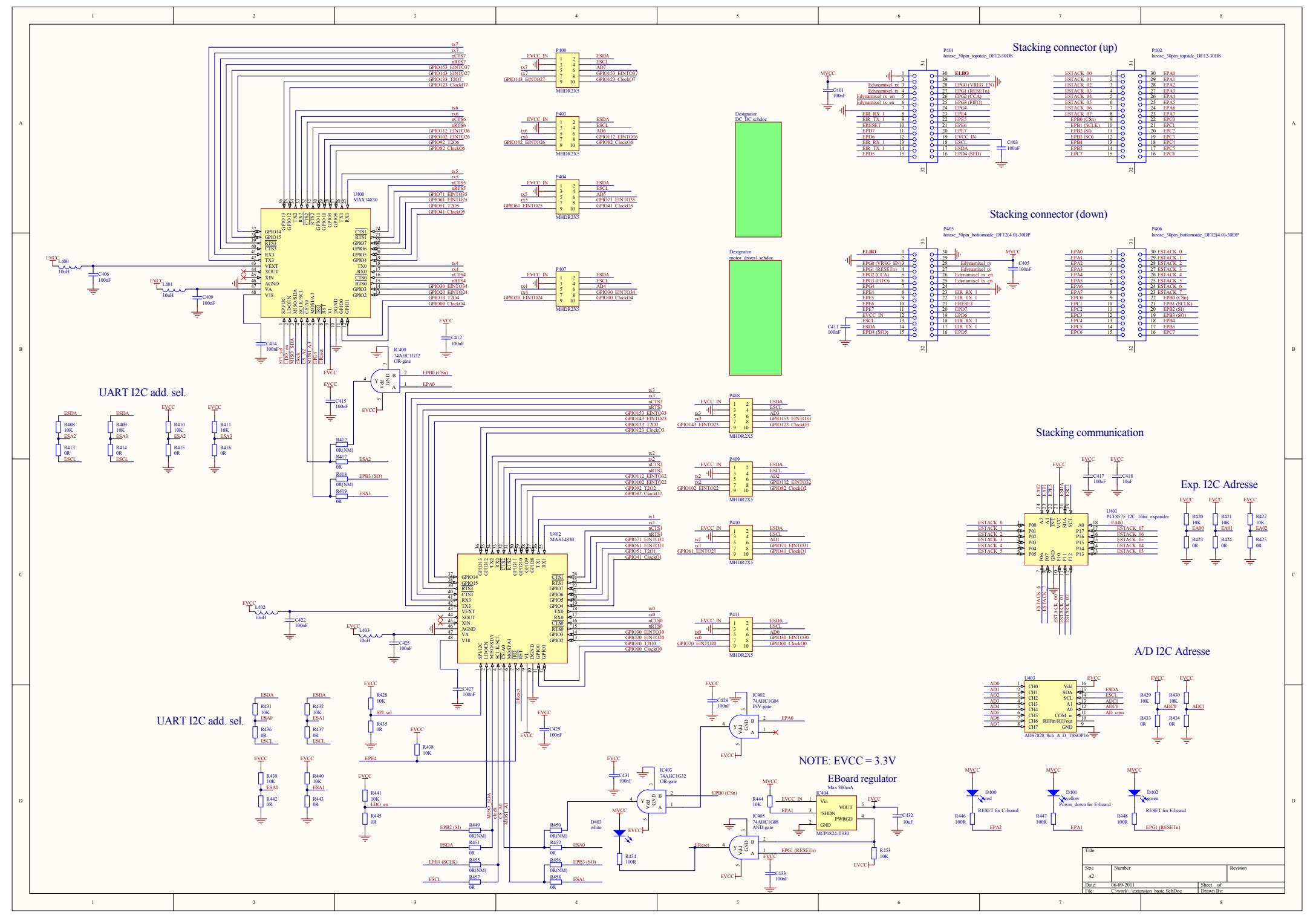
Stacking connector (up)
Stacking connector (down)
Stacking communication
Exp. I2C Adresse
A/D I2C Adresse
UART I2C add. sel.
UART I2C add. sel.
NOTE: EVCC = 3.3V
EBoard regulator
Max 300mA
P401
hirose_30pin_topside_DF12-30DS
P402
hirose_30pin_topside_DF12-30DS
P405
hirose_30pin_bottomside_DF12(4.0)-30DP
P406
hirose_30pin_bottomside_DF12(4.0)-30DP
Designator
DC_DC_schdoc
Designator
motor_driver1.schdoc
U400
MAX14830
U402
MAX14830
U401
PCF8575_I2C_16bit_expander
U403
ADS7828_8ch_A_D_TSSOP16
IC400
74AHC1G32
OR-gate
IC402
74AHC1G04
INV-gate
IC403
74AHC1G32
OR-gate
IC404
MCP1824-T330
IC405
74AHC1G08
AND-gate
P400
P403
P404
P407
P408
P409
P410
P411
MHDR2X5
D400
red
RESET for C-board
D401
yellow
Power_down for E-board
D402
green
RESET for E-board
D403
white
Title
Size
A2
Number
Revision
Date:
06-09-2011
Sheet of
File:
C:\work\..\extension_basic.SchDoc
Drawn By:

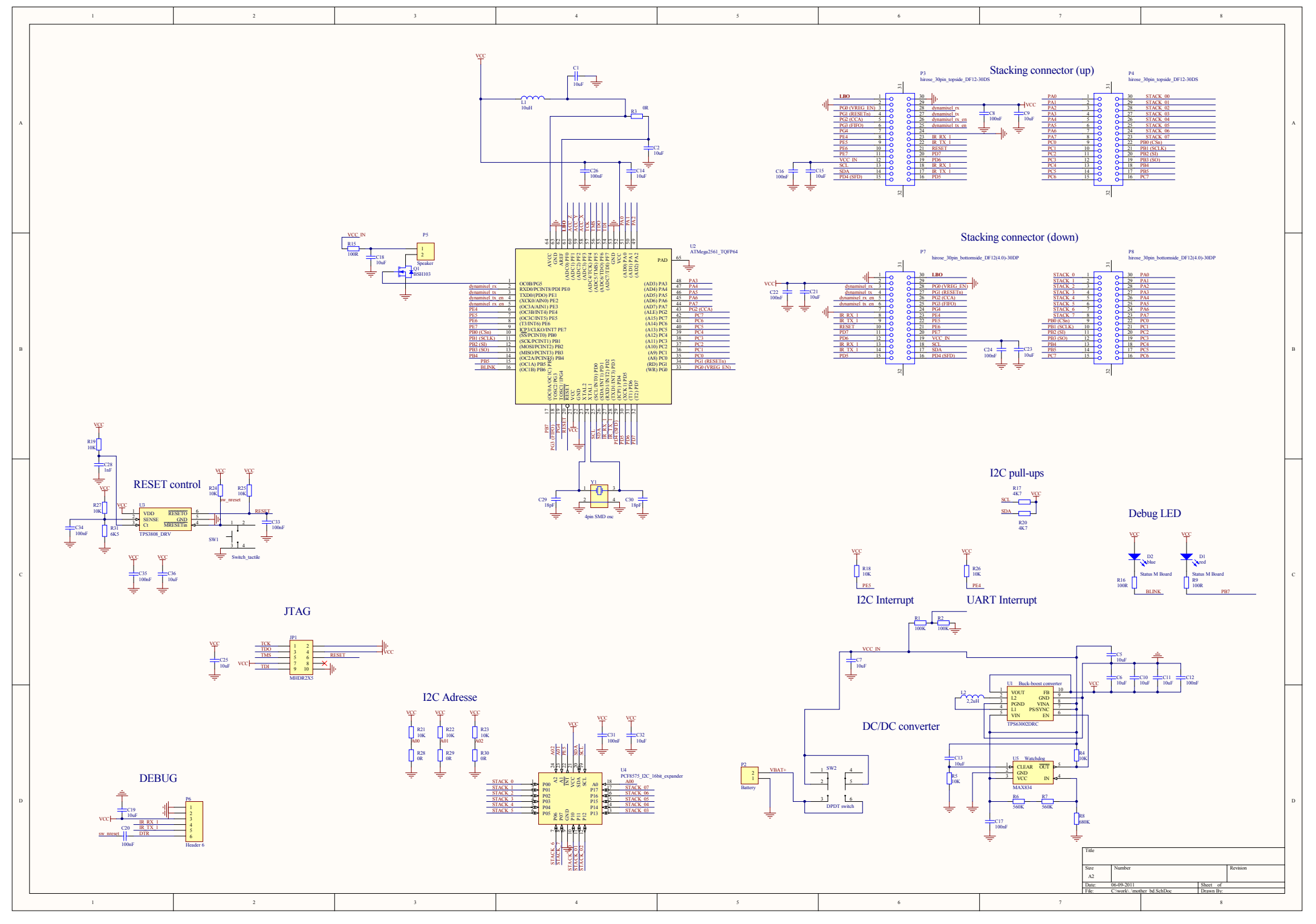

Stacking connector (up)
P3
hirose_30pin_topside_DF12-30DS
P4
hirose_30pin_topside_DF12-30DS
Stacking connector (down)
P7
hirose_30pin_bottomside_DF12(4.0)-30DP
P8
hirose_30pin_bottomside_DF12(4.0)-30DP
U2
ATMega2561_TQFP64
P5
Speaker
Q1
BSH103
RESET control
U3
TPS3808_DRV
Switch_tactile
SW1
4pin SMD osc
Y1
I2C pull-ups
Debug LED
Status M Board
I2C Interrupt
UART Interrupt
JTAG
JP1
MHDR2X5
I2C Adresse
U4
PCF8575_I2C_16bit_expander
DC/DC converter
U1 Buck-boost converter
TPS63002DRC
U5 Watchdog
MAX834
P2
Battery
SW2
DPDT switch
DEBUG
P6
Header 6
Title
Size
A2
Number
Revision
Date: 06-09-2011
Sheet of
File: C:\work\..\mother_bd.SchDoc
Drawn By:

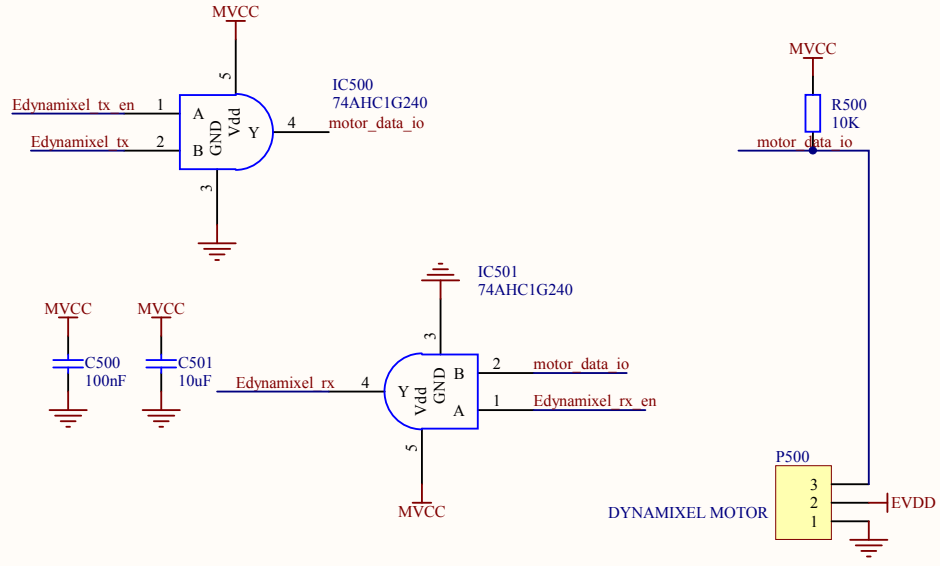

Title		
Size: A4	Number	Revision
Date: 06-09-2011	Sheet of	
File: C:\work\..\motor_driver1.SchDoc	Drawn By:	

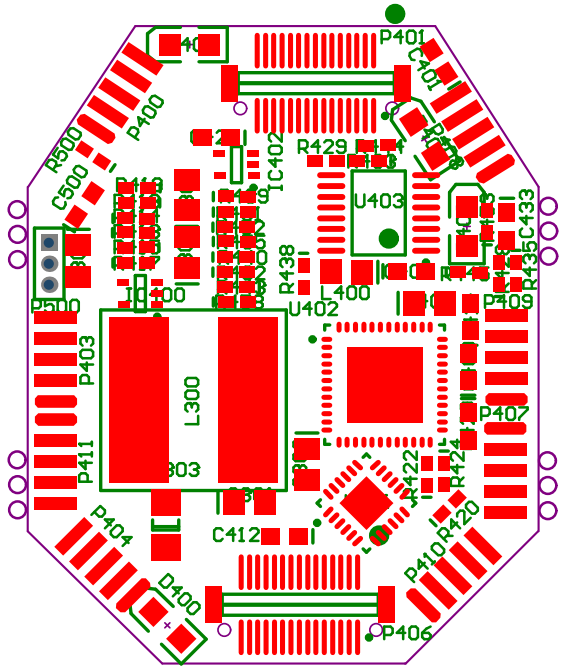
P401
C401
P400
R500
C500
C402
R429
U403
C433
R435
R438
L400
P409
P500
U402
P403
L300
P407
P411
R422
R424
C412
R420
P404
P410
D400
P406

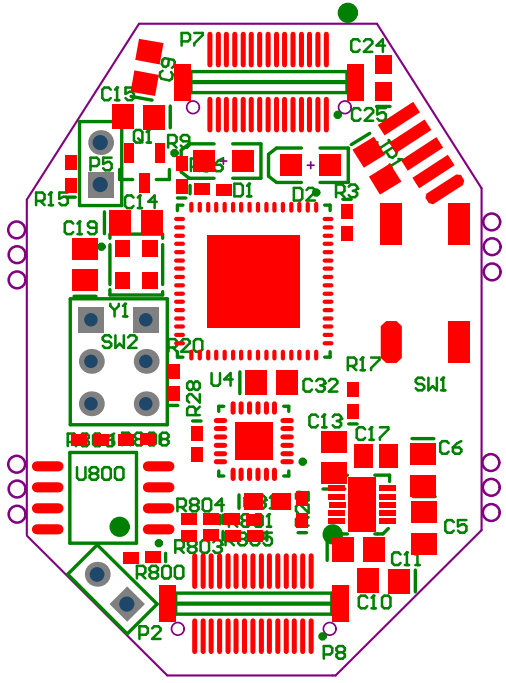
P7
C24
C9
C15
C25
Q1
P9
P5
D1
D2
R3
R15
C14
C19
Y1
SW2
R20
R17
SW1
U4
C32
R28
C13
C17
C6
U800
R804
C5
R803
C11
R800
C10
P2
P8

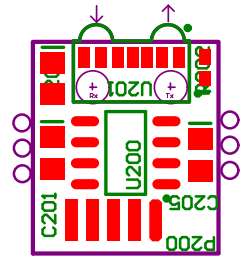
U201
U200
C201
C205
P200

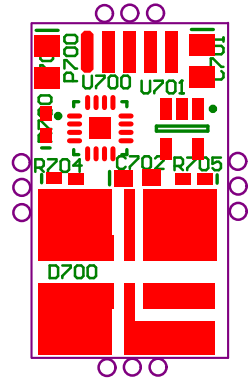
P700
C701
U700
U701
R704
C702
R705
D700

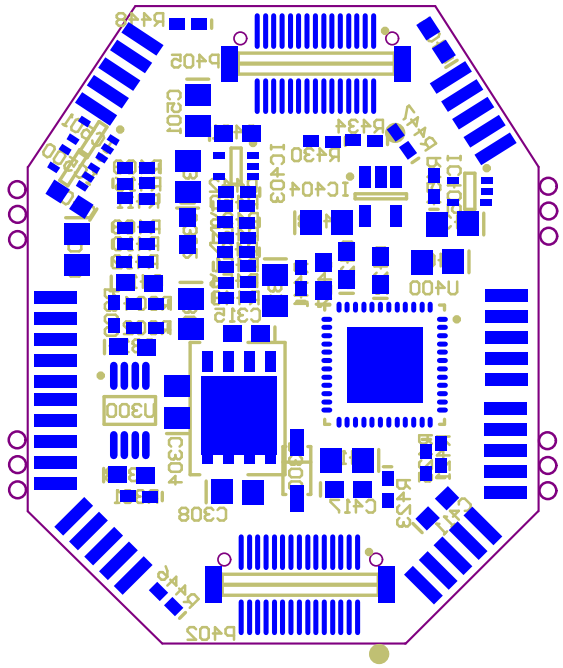

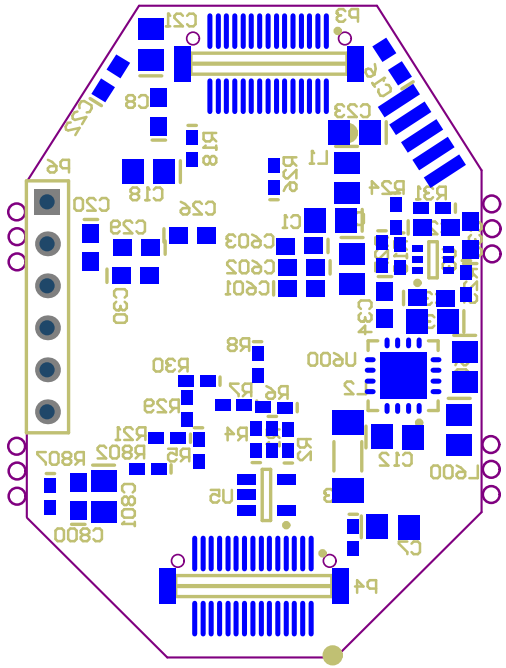

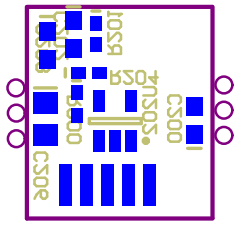

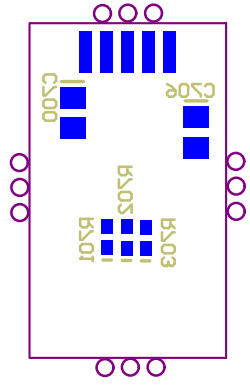

Comment	Description	Designator	Footprint	LibRef	Quantity
10uF	Capacitor	C1, C2, C5, C8, C17, C9, C10, C11, C13, C14, C15, C18, C19, C21, C23, C25, C32, C36, C201, C204, C205, C206, C300, C301, C302, C303, C304, C305, C307, C308, C309, C310, C311, C418, C432, C501, C701, C703, C706, C801	C0805	Cap	40
100nF	Capacitor	C6, C16, C20, C22, C24, C26, C31, C33, C34, C35, C202, C203, C401, C403, C405, C408, C409, C411, C412, C414, C415, C417, C422, C425, C427, C428, C429, C431, C433, C500, C601, C602, C603, C702, C800	0603	Cap	35
100nF	Capacitor	C12, C17	0805	Cap	2
1nF	Capacitor	C28	0603	Cap	1
18pF	Capacitor	C29, C30	0603	Cap	2
10nF	Capacitor	C200, C313	0603	Cap	2
82nF	Capacitor	C312, C314	0603	Cap	2
3,9nF	Capacitor	C315	0603	Cap	1
0.22uF	Capacitor	C600	C0805	Cap	1
1uF	Capacitor	C700	C0805	Cap	1
red	High Performance Chip LED, Red	D1, D400	2.0X1.25X0.8	HSMZ-C170	2
blue	High Performance Chip LED, Blue	D2	2.0X1.25X0.8	HSMZ-C170	1
MBR0520	Schottky Rectifier	D300	SOD123	10BQ015	1
yellow	High Performance Chip LED, Yellow	D401	2.0X1.25X0.8	HSMZ-C170	1
green	High Performance Chip LED, Green	D402	2.0X1.25X0.8	HSMZ-C170	1
white	High Performance Chip LED, White	D403	2.0X1.25X0.8	HSMZ-C170	1
RGBLED_PLCC6		D700	PLCC6	RGBLED_PLCC6	1
74AHC1G32	Single 2 input OR gate	IC400, IC403	SOT353-5AN	Fairchild TINYLOGIC NC7S08	2
74AHC1G04	Single INV gate	IC402	SOT353-5AN	Fairchild TINYLOGIC NC7S08	1
MCP1824-T330	3.3V LDO Voltage regulator	IC404, U202, U701	SOT23-5BM	MCP1824-T330	3
74AHC1G08	Single 2 input AND gate	IC405	SOT353-5AN	Fairchild TINYLOGIC NC7S08	1
74AHC1G240	Single tristate driver gate	IC500, IC501	SOT353-5AN	Fairchild TINYLOGIC NC7S08	2
MHDR2X5	Header, 5-Pin, Dual row	P1, P300, P400, P403, P404, P407, P408, P409, P410, P411, P700	staggar2X5_1.27	MHDR2X5	11
10uH	Inductor 1457859	L1, L402, L403, L600, L402, L403, L600	0805	Inductor	6
2,2uH	Inductor	L2	INDC4516AN	Inductor	1
Inductor 22uH 1167707		L300	COIL_megalarge	Murata 4x4mm Inductor	1
Battery	Header, 2-Pin	P2	HDR1X2	Header 2	1
hirose_30pin_topsides_DF12-30DS	Hirose_30pin_0.5mm	P3, P4, P401, P402	Hirose_30pin_0.5mm	hirose_30pin_0.55	4
Speaker	Header, 2-Pin	P5	HDR1X2	Header 2	1
Header 6	Header, 6-Pin	P6	HDR1X6	Header 6	1
hirose_30pin_bottomside_DF12A-0)-30DP	Hirose_30pin_0.5mm	P7, P8, P405, P406	Hirose_30pin_0.5mm	hirose_30pin_0.55	4
STR6X65XE1, MOTOR	Header, 3-Pin	P500	MHDR1X3	Header 3	1
BSH103	N-channel Enhancement Mode MOSFET	Q1	SOT23-3L	BSH103	1
IRF7201	HEXFET Power MOSFET	Q300	SONSuper8	IRF7201	1
100K	Resistor	R1, R2	0402	Res2_1	2
0R	Resistor	R3, R28, R29, R30, R413, R414, R415, R416, R417, R419, R423, R424, R425, R433, R434, R435, R436, R437, R442, R443, R445, R451, R452, R457, R458, R704, R803, R804, R805, R806, R808	0402	Res1, Res2_1	31
10K	Resistor	R4, R5, R18, R19, R21, R22, R23, R24, R25, R26, R27, R200, R204, R408, R409, R410, R411, R420, R421, R422, R428, R429, R430, R431, R432, R438, R439, R440, R441, R444, R453, R500, R800, R801, R802	0402	Res2, Res2_1	35
560K	Resistor	R6, R7	0402	Res2	2
680K	Resistor	R8	0402	Res2	1
100R	Resistor	R9, R15, R16, R446, R447, R448, R454	0402	Res2_1	7
4K7	Resistor	R17, R20	0402	Res2_1	2
6K5	Resistor	R31	0402	Res2_1	1
47R	Resistor	R201	0402	Res2_1	1
1K	Resistor	R202, R302, R807	0402	Res1, Res2_1	3
11K	Resistor	R300	0402	Res2_1	1
30.1K	Resistor	R301	0402	Res2_1	1
25mOhm	Resistor	R303	1206	Res2_1	1
2,55K	Resistor	R304	0402	Res2_1	1
0R(NM)	Resistor	R412, R418, R449, R450, R455, R456, R705	0402	Res2_1	7
47K	Resistor	R700	0402	Res2_1	1
5R1	Resistor	R701	0402	Res2_1	1
2R4	Resistor	R702	0402	Res2_1	1
62R	Resistor	R703	0402	Res2_1	1
Switch_tactile	ALPS tackitile Farnell no. 1656433	SW1	switch_tackitile	Switch_tactile	1
DPDT switch		SW2	DPDTswitch	DPDT switch	1
TPS63002DRC		U1	TPS6300x	Component_1	1
ATMega2561_TQFP64		U2	Atmega128_TQFP64	ATmega128_TQFP64	1
TPS3808_DRV	microprocessor supervisory	U3	SOT363-6L	TPS3808_DRV	1
PCF8575_I2C_16bit_expainder		U4, U401	QFN50P400X400-24V2N	PCF8575_I2C_16bit_expainder	2
MAX834	Micropower, Latching Voltage Monitor	U5	SOT23-5RN	MAX834	1
MCP2122		U200	SOIC127P600-8AL	MCP2122	1
TFBS4650	Vishay IR transceiver TFBS4650	U201	ir_transceiverTFBS4650	TFBS4650	1
LM3477MM	High Efficiency High Side N-Channel Controller for Switching Regulator	U300	MUA08A_N	LM3477MM	1
MAX1483D		U400, U402	QFN48_novia	MAX1483D	2
ADS7828_8ch_A_D_TSSOP16	ADS7828	U403	TSOP65P640-16AN	ADS7828_8ch_A_D_TSSOP16	1
ADXL330	3 axis accelerometer, 3G	U600	QFN65P400X400-16V2L	ADXL330	1
A6281		U700	QFN35P300X300-16V2M	A6281	1
24AA1025T-I/SM	1 Mbit, 400kHz, 1.7V, I2C Serial EEPROM, 8-Pin SOIC 208mil, Industrial Temperature, Tape and Reel	U800	SOJ-SM8_L	24AA1025T-I/SM	1
4pin SMD osc		Y1	2.5x2.0SMD4PINOSC	4pin SMD osc	1