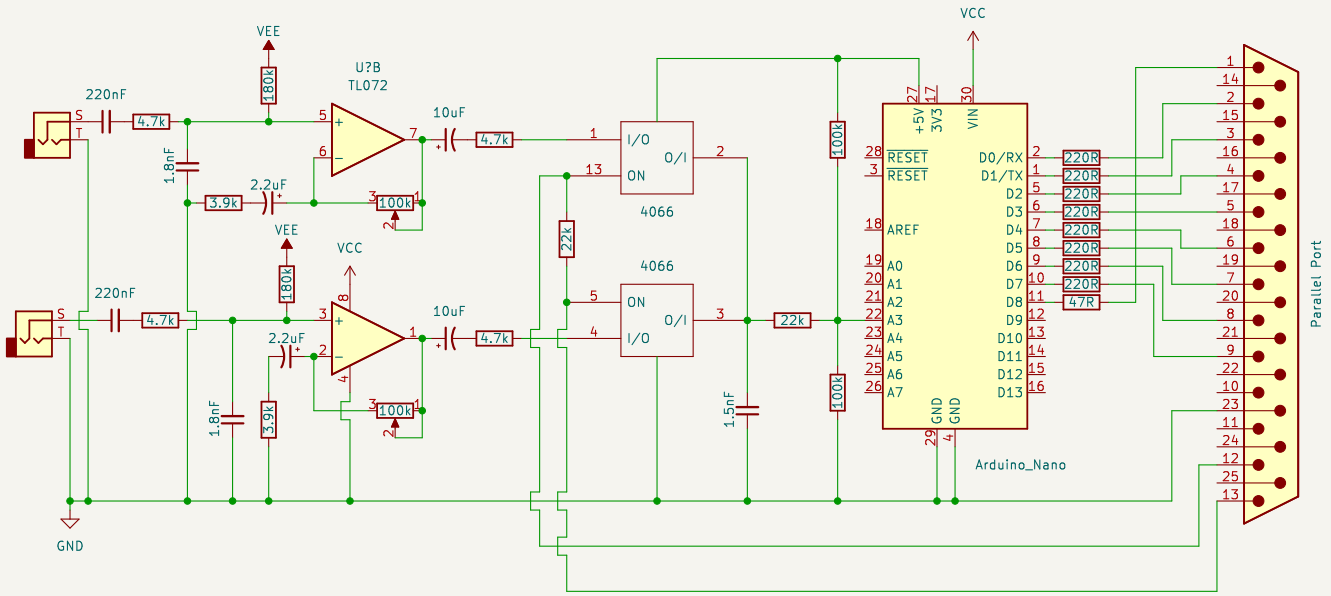

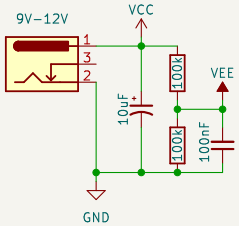

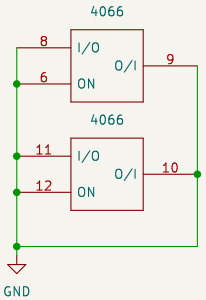

Sheet: /
File: Arduinosound ADC.kicad_sch

Title: Arduinosound Turbo

Size: A4	Date:	Rev:
KiCad E.D.A. kicad (6.0.8)		Id: 1/1