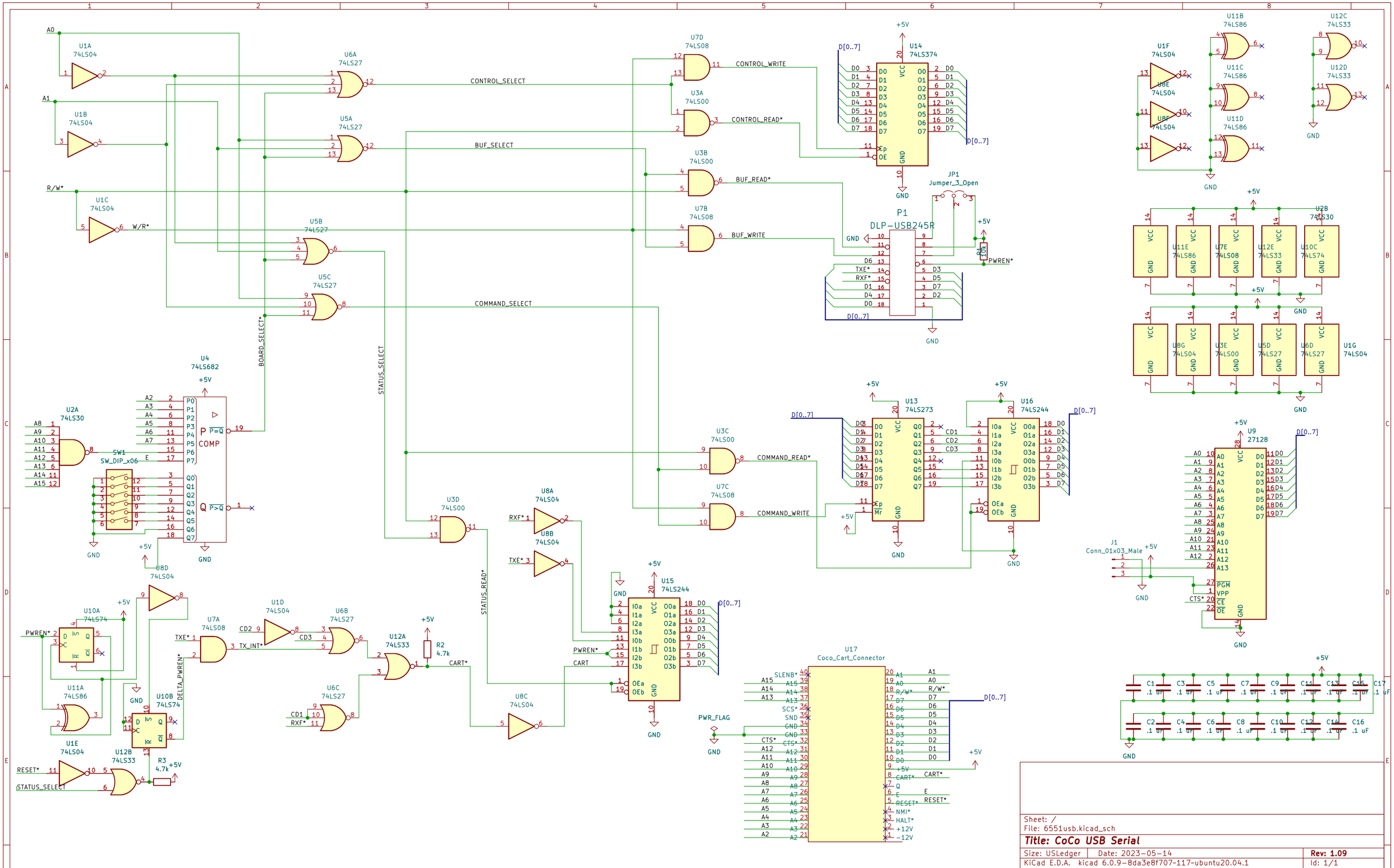

Sheet: /
File: 6551usb.kicad_sch

Title: CoCo USB Serial

Size: USLedger	Date: 2023-05-14	Rev: 1.09
KiCad E.D.A. kicad 6.0.9-8da3e8f707~117~ubuntu20.04.1		Id: 1/1