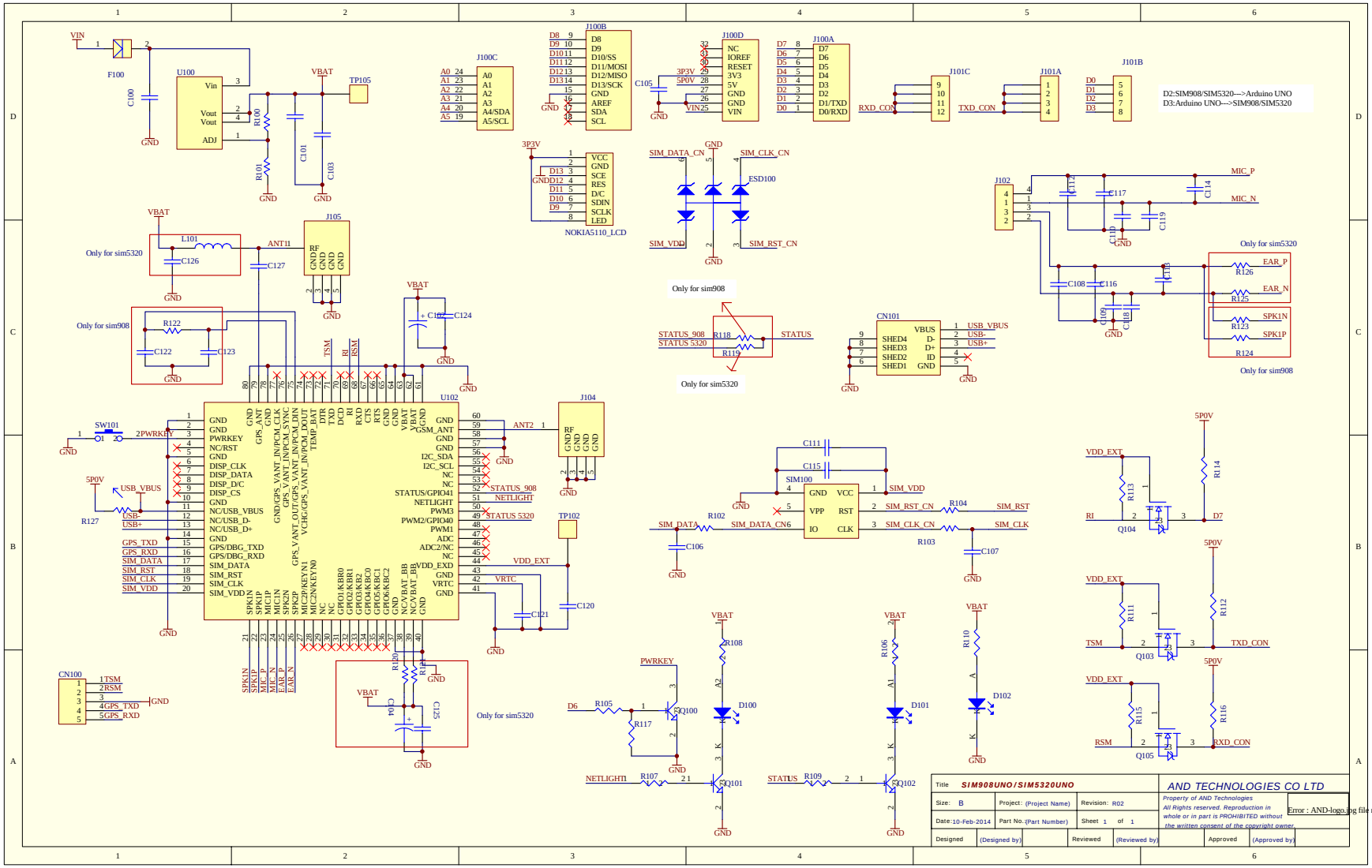

Error : AND-logo.jpg file not found.